Lenovo ThinkSystem SR850 V2 Server
Product Guide

The Lenovo ThinkSystem SR850 V2 is a 4-socket server that is densely packed into a 2U rack design. The server offers technology advances, including third-generation Intel Xeon Scalable processors with support for Intel Optane Persistent Memory 200 Series, and scale-up capacity with up to 12TB of system memory, up to 7x PCIe slots, and up to 24x 2.5-inch drive bays.

Suggested uses: Mission critical scaling up from 2S systems such as enterprise virtualization, CRM, ERP, SQL databases, VDI and small-mid sized SAP HANA computing environments.



Figure 1. Lenovo ThinkSystem SR850 V2

Did you know?

The Lenovo ThinkSystem SR850 V2 provides the advanced capabilities of four of the new third-generation Intel Xeon Scalable processors, however if you wish, you can start with two processors and 24 DIMM slots and then easily expand by adding the processor & memory expansion tray to easily scale up to four processors and 48 DIMMs.

The SR850 V2 has space for 24x 2.5-inch drive bays, all 24 of which can be configured as NVMe drive bays, or AnyBay drive bays which support SAS, SATA or NVMe drives. NVMe drives are high-speed, low-latency storage, ideal for high-performance local storage or you can mix them with SAS or SATA SSDs or HDDs for storage tiering.

Key features

The flexible ThinkSystem SR850 V2 server supports third-generation Intel Xeon Scalable Gold or Platinum processors and can scale from two to four processors. Built for standard workloads like general business applications and server consolidation, it can also accommodate high-growth areas such as databases and virtualization. The ThinkSystem SR850 V2's agile design permits rapid upgrades for processors and memory, and its large, flexible storage capacity helps to keep pace with data growth.

With the capability to support up to 48 DIMMs, four sockets, up to 24 drives for internal storage, up to 7 PCIe slots plus a dedicated OCP 3.0 slot for 1, 10 or 25 GbE networking, the SR850 V2 provides unmatched features and capabilities in a dense 2U rack-mount design.

Scalability and performance

The SR850 V2 offers numerous features to boost performance, improve scalability and reduce costs:

- Supports two or four 3rd Gen Intel Xeon Processor Scalable processors, allowing you to start with two processors and then upgrade to four when you need it.
- Supports Gold and Platinum level processors in the Intel Xeon Processor Scalable Family. Processors supported have up to 28 cores, core speeds of up to 3.9 GHz, and TDP ratings of up to 250W.
- The SR850 V2's processor expansion tray design enables you to start with two processors and 24 DIMM sockets and upgrade to four processors and 48 DIMM sockets when you need it, helping lower initial costs and manage growth.
- Up to four processors, 112 cores, and 224 threads maximize the concurrent execution of multithreaded applications.
- Enhanced inter-processor communications with six UPI connections between adjacent processors ensures increased CPU I/O throughput.
- Supports the new bfloat16 instruction set for Enhanced Deep Learning Boost
- Intelligent and adaptive system performance with Intel Turbo Boost Technology 2.0 allows processor cores to run at maximum speeds during peak workloads by temporarily going beyond processor TDP.
- Intel Hyper-Threading Technology boosts performance for multithreaded applications by enabling simultaneous multithreading within each processor core, up to two threads per core.
- Intel Virtualization Technology integrates hardware-level virtualization hooks that allow operating system vendors to better use the hardware for virtualization workloads.
- Intel Speed Select Technology supported on some processor models, enables increased core Turbo Boost frequency on specific individual cores to maximize application performance.
- Enhanced Intel Deep Learning Boost provides built-in acceleration with the Vector Neural Network Instruction set (VNNI) and new bloat16 instructions. These are designed to deliver significant, more efficient Deep Learning (Inference) acceleration for high-performance Artificial Intelligence (AI) workloads.
- Intel Advanced Vector Extensions 512 (AVX-512) enable acceleration of enterprise-class workloads, including databases and enterprise resource planning (ERP).
- Support for up to 48 TruDDR4 memory DIMMs operating at up to 3200 MHz means you have the fastest available memory subsystem and memory capacity of up to 12 TB with 48x 256 GB 3DS RDIMMs.
- Supports configurations of 2 DIMMs per channel to operate at the 3200 MHz rated speed of the memory DIMMs.
- Supports the new Intel Optane Persistent Memory 200 Series for advanced in-memory database applications, dense-virtualization; up to 24 PMem Modules can be installed in conjunction with regular system memory. PMem modules are up to 512 GB each, for a total of up to 12 TB of Persistent Memory (3 TB per processor).

- The use of solid-state drives (SSDs) instead of, or along with, traditional spinning drives (HDDs), can improve I/O performance. An SSD can support up to 100 times more I/O operations per second (IOPS) than a typical HDD.
- Up to 24x 2.5-inch drive bays -- supporting combinations of SAS or SATA HDDs, SAS or SATA SSDs, and NVMe PCIe SSDs -- provide a flexible and scalable all-in-one platform to meet your increasing demands. Up to 24x NVMe drives are supported, maximizing drive I/O performance in terms of throughput, bandwidth, and latency.
- The server has a dedicated industry-standard OCP 3.0 small form factor (SFF) slot, with a PCIe 3.0 x16 interface, supporting a variety of Ethernet network adapters. Simple-swap mechanism with thumbscrews and pull-tab enables tool-less installation and removal of the adapter. Supports shared BMC network sideband connectivity to enable out-of-band systems management.
- Up to 7 PCIe 3.0 slots in addition to the OCP 3.0 Ethernet slot to maximize I/O capabilities.
- New high-speed RAID controllers from Broadcom provide 12 Gb SAS connectivity to the drive backplanes. A variety of RAID adapters are available, with cache up to 8 GB and support for all 24 drives in the server on a single controller. The RAID 940-16i 8GB Flash adapter supports RAID volumes with NVMe, SAS or SATA drives.
- Supports up to two externally accessible 7mm hot-swap drives with RAID functionality, in addition to the 24 front drive bays. These 7mm drives are ideal for operating system boot functions.
- Integrated SATA controller with Software RAID (Intel RSTe) support for up to 8x drives with basic RAID functionality with no additional adapter needed.
- Supports Intel VROC (Virtual RAID on CPU) which enables basic RAID functionality on the onboard NVMe ports of the server, with no additional adapter needed. This feature enables RAID on NVMe drives without the need for a separate RAID adapter.

Availability and serviceability

The SR850 V2 provides many features to simplify serviceability and increase system uptime:

- Designed to run 24 hours a day, 7 days a week
- The server offers Single Device Data Correction (SDDC, also known as Chipkill), Adaptive Double-Device Data Correction (ADDDC, also known as Redundant Bit Steering or RBS), and memory mirroring for redundancy in the event of a non-correctable memory failure.
- The server offers hot-swap drives, supporting RAID redundancy for data protection and greater system uptime.
- Available pair of 7mm hot-swap drives support RAID-1 which can enable two SATA or two NVMe drive to be configured as a redundant pair.
- The server two hot-swap redundant power supplies and six N+1 redundant fans to provide availability for business-critical applications.
- The power-source-independent light path diagnostics uses LEDs to lead the technician to failed (or failing) components, which simplifies servicing, speeds up problem resolution, and helps improve system availability.
- Offers a diagnostics port on the front of the server to allow you to attach an external diagnostics handset for enhanced local systems management capabilities. The handset has an LCD display which provides more detailed diagnostics by displaying all error messages and VPD data needed for a service call, thereby aiding with problem resolution and system uptime.
- Proactive Platform Alerts (including PFA and SMART alerts): Processors, voltage regulators, memory, internal storage (SAS/SATA HDDs and SSDs, NVMe SSDs, flash storage adapters), fans, power supplies, RAID controllers, server ambient and subcomponent temperatures. Alerts can be surfaced through the XClarity Controller to managers such as Lenovo XClarity Administrator, VMware vCenter, and Microsoft System Center. These proactive alerts let you take appropriate actions in advance of possible failure, thereby increasing server uptime and application availability.
- Solid-state drives (SSDs) offer more reliability than traditional mechanical HDDs for greater uptime.

- The built-in XClarity Controller continuously monitors system parameters, triggers alerts, and performs recovery actions in case of failures, to minimize downtime.
- Built-in diagnostics in UEFI, using Lenovo XClarity Provisioning Manager, speed up troubleshooting tasks to reduce service time.
- Lenovo XClarity Provisioning Manager collects and saves service data to USB key drive or remote CIFS share folder, for troubleshooting and to reduce service time.
- Auto restart in the event of a momentary loss of AC power (based on the power policy setting in the XClarity Controller service processor)
- Support for the XClarity Administrator Mobile app running on a supported smartphone or tablet and connected to the server through the front USB 2.0 port, enables additional local systems management functions.
- Three-year or one-year customer-replaceable unit and onsite limited warranty, 9 x 5 next business day. Optional service upgrades are available.

Manageability and security

Powerful systems management features simplify local and remote management of the SR850 V2:

- Lenovo XClarity Controller (XCC) monitors server availability and performs remote management. XCC Enterprise is standard, which enables remote KVM, the mounting of remote media files (ISO and IMG image files), boot capture, and power capping.
- Lenovo XClarity Administrator offers comprehensive hardware management tools that help to increase uptime, reduce costs and improve productivity through advanced server management capabilities.
- UEFI-based Lenovo XClarity Provisioning Manager, accessible from F1 during boot, provides system inventory information, graphical UEFI Setup, platform update function, RAID Setup wizard, operating system installation function, and diagnostic functions.
- Support for Lenovo XClarity Energy Manager, which captures real-time power and temperature data from the server and provides automated controls to lower energy costs.
- Integrated Trusted Platform Module (TPM) 2.0 support enables advanced cryptographic methods, such as digital signatures and remote attestation.
- Supports Secure Boot to ensure only a digitally signed operating system can be used. Supported with HDDs and SSDs.
- Industry-standard Advanced Encryption Standard (AES) NI support for faster, stronger encryption.
- Intel Execute Disable Bit functionality can prevent certain classes of malicious buffer overflow attacks when combined with a supported operating system.
- Intel Trusted Execution Technology provides enhanced security through hardware-based resistance to malicious software attacks, allowing an application to run in its own isolated space, protected from all other software running on a system.

Energy efficiency

The SR850 V2 offers the following energy-efficiency features to save energy, reduce operational costs, and increase energy availability:

- Energy-efficient planar components help lower operational costs.
- High-efficiency power supplies with 80 PLUS Platinum and Titanium certifications
- Intel Intelligent Power Capability turns individual processor elements on and off as needed to reduce power draw.
- Low-voltage 1.2 V DDR4 memory offers energy savings compared to 1.35 V and 1.5 V DDR3 DIMMs.
- Solid-state drives (SSDs) consume as much as 80% less power than traditional spinning 2.5-inch HDDs.
- The server uses hexagonal ventilation holes, which can be grouped more densely than round holes, providing more efficient airflow through the system and thus keeping your system cooler.
- Optional Lenovo XClarity Energy Manager provides advanced data center power notification, analysis, and policy-based management to help achieve lower heat output and reduced cooling needs.

Components and connectors

The following figure shows the front of the server.

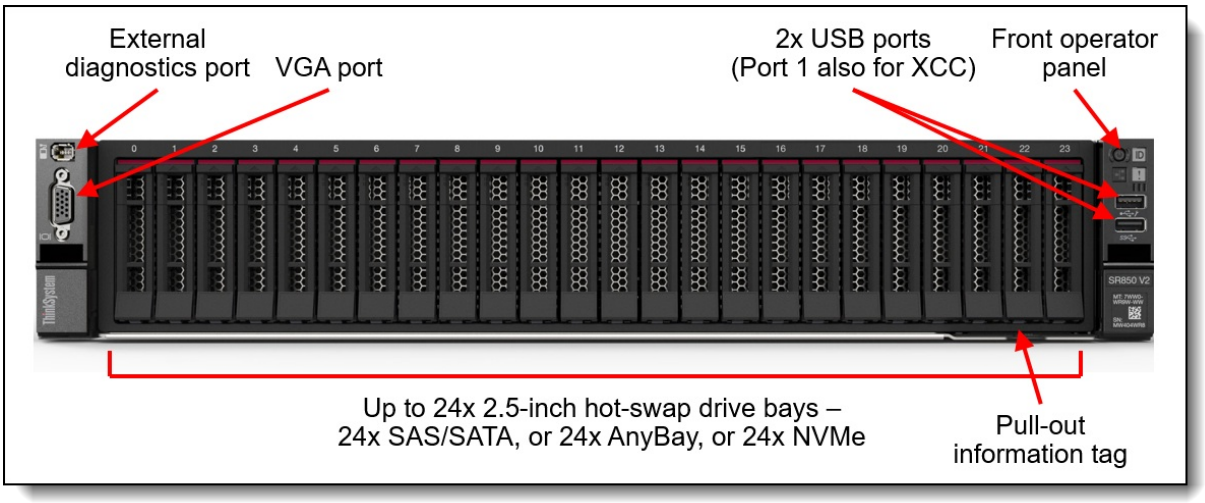

Figure 2. Front view of the ThinkSystem SR850 V2

The following figure shows the rear of the server with 7x PCIe slots

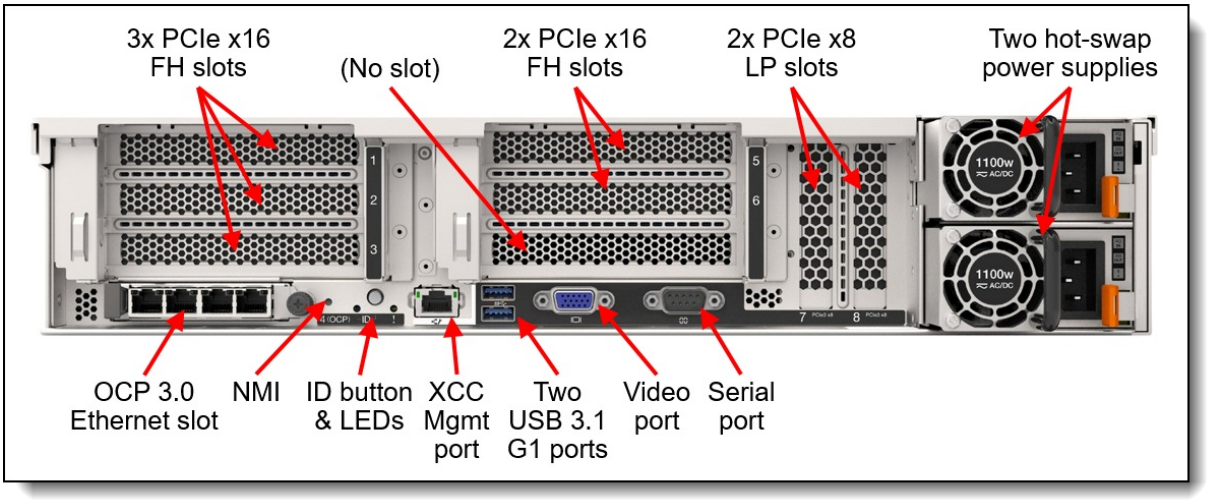

Figure 3. Rear view of the ThinkSystem SR850 V2 with 7x PCIe slots

The following figure shows an alternative rear configuration with 2x 7mm hot-swap drives and up to 4x PCIe slots.

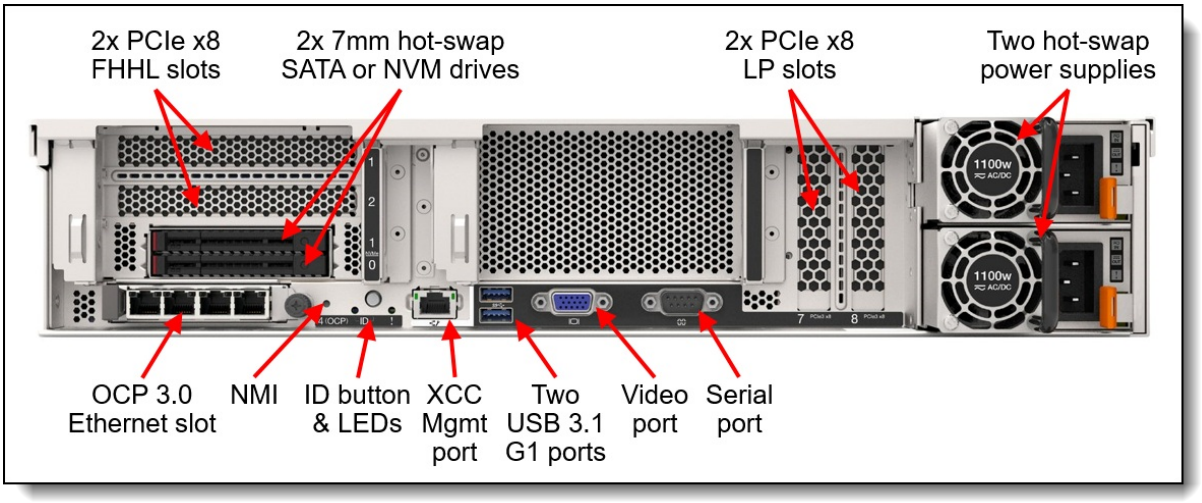

Figure 4. Rear view of the ThinkSystem SR850 V2 with 2x 7mm drives

The following figure shows the locations of key components inside the server with the processor and memory expansion tray removed.

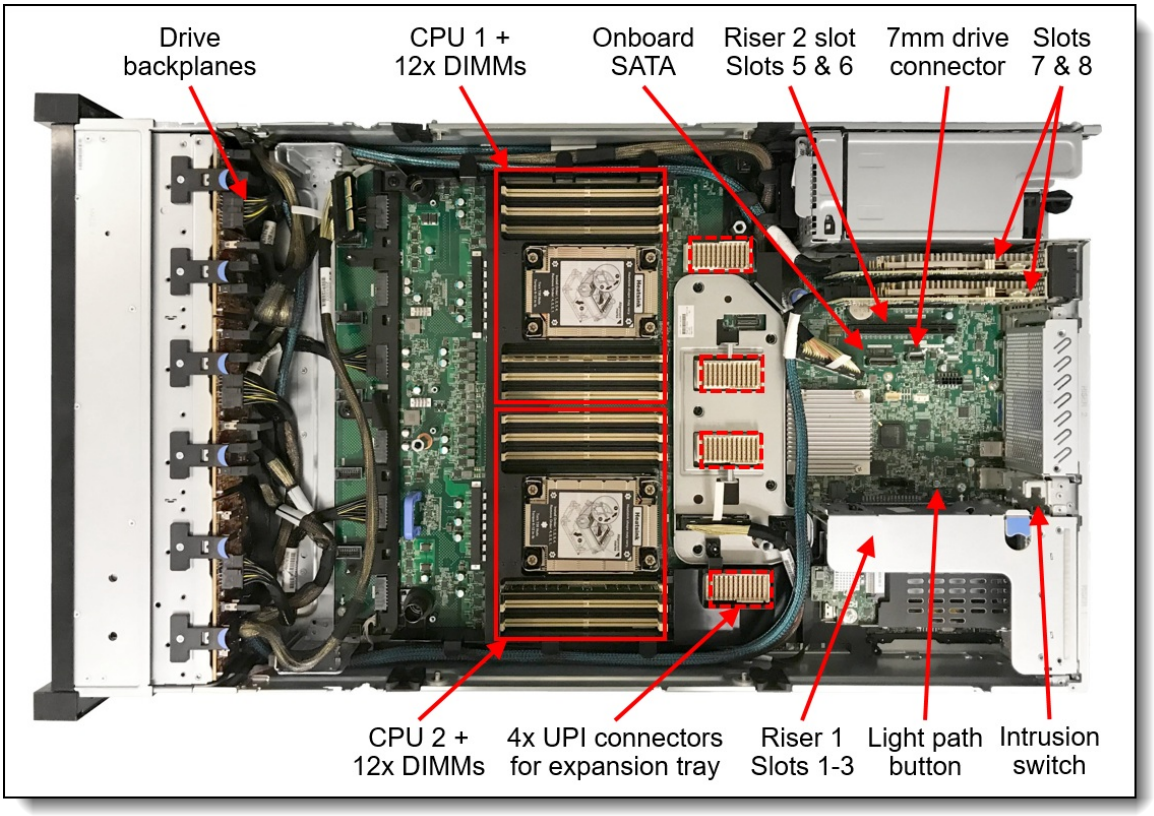

Figure 5. Internal view (processor and memory expansion tray removed)

The following figure shows the inside the server with processor and memory expansion tray installed.

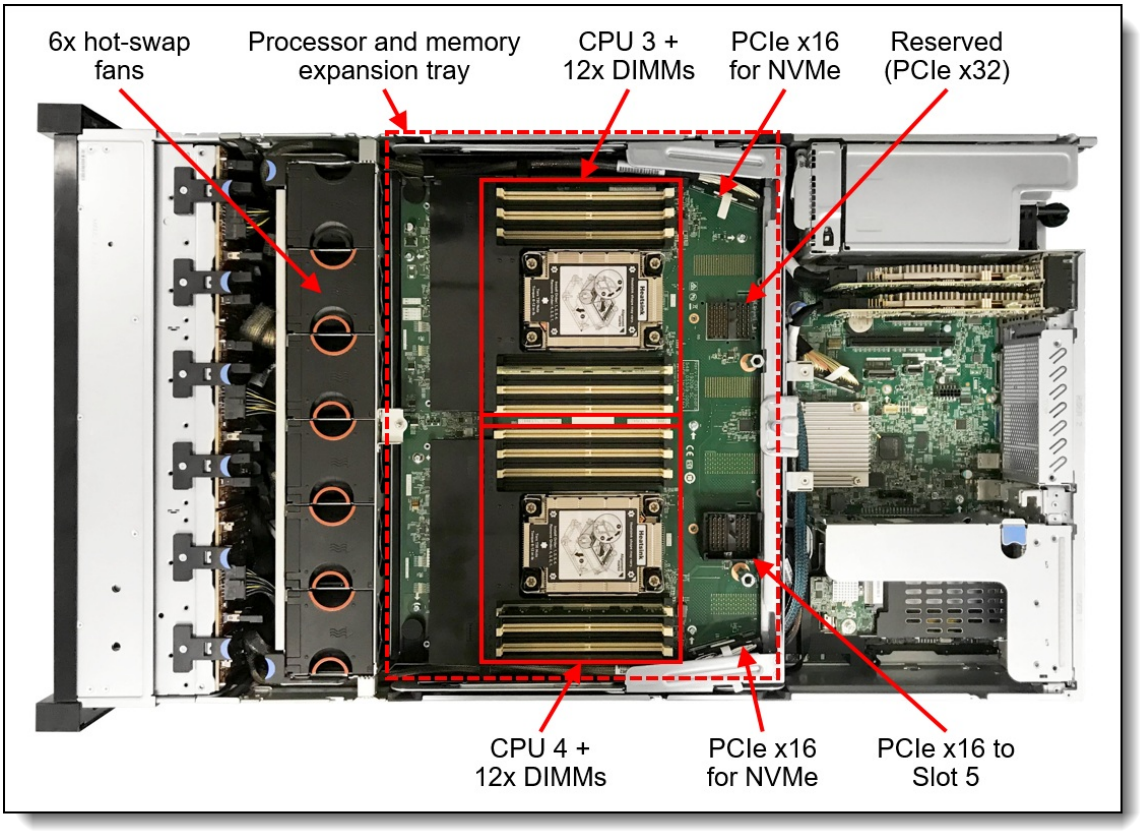

Figure 6. Internal view (processor and memory expansion tray installed)

System architecture

The following figure shows the architectural block diagram of the SR850 V2, showing the major components and their connections.

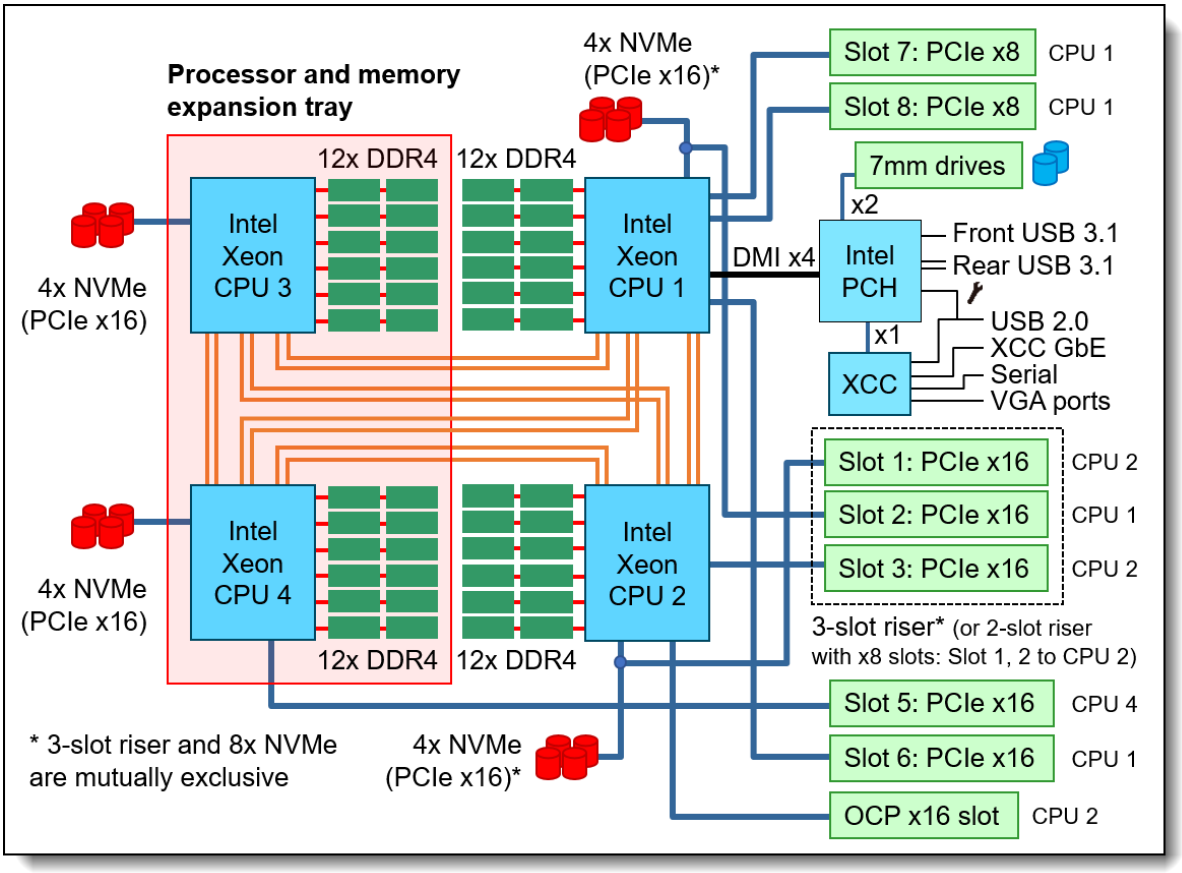

Figure 7. SR850 V2 system architectural block diagram

Standard specifications

The following table lists the standard specifications.

Table 1. Standard specifications

Components	Specification
Machine types	7D31 - 1-year warranty 7D32 - 3-year warranty 7D33 - SAP HANA configurations with 3-year warranty
Form factor	2U rack.
Processor	Two or four third-generation Intel Xeon Scalable processors, either Gold or Platinum level processors (formerly codename "Cooper Lake" or CPX6). Supports processors up to 28 cores, core speeds up to 3.9 GHz, and TDP ratings up to 250W. Two processor sockets on the system board and two processors on the Processor and Memory Expansion Tray. Six Intel Ultra Path Interconnect (UPI) links at 10.4 GT/s each. Four processors are connected in a mesh topology.
Chipset	Intel C621A "Lewisburg" chipset, part of the platform codenamed "Cedar Island" (CDS)

Components	Specification
Memory	Up to 48 DIMM slots (12 DIMMs per processor). Each processor has 6 memory channels, with 2 DIMMs per channel. Lenovo TruDDR4 RDIMMs and 3DS RDIMMs are supported. 24 DIMM sockets on the system board, and an additional 24 DIMM sockets on the processor and memory expansion tray. DIMM slots are shared between standard system memory and persistent memory. DIMMs operate at up to 3200 MHz at 2 DPC.
Persistent memory	Supports up to 24x Intel Optane Persistent Memory 200 Series modules installed in the DIMM slots. Persistent memory is installed in combination with system memory DIMMs. Supports App Direct mode to enhance the performance of applications such as SAP HANA.
Memory maximums	• With system memory DIMMs: Up to 12TB with 48x 256GB 3DS RDIMMs and four processors (3.0TB per processor). • With Persistent Memory in AppDirect mode: Up to 18TB total memory (12TB of Persistent Memory using 24x 512GB PMMs + 6TB of system memory using 24x 256GB 3DS RDIMMs and four processors) (4.5TB per processor) **Note**: Support of more than 1.125TB per processor (more than 4.5TB for a 4-processor system) requires HL-suffix processors. These calculations include any Persistent Memory installed. See the Memory capacity of processors section for more information.
Memory protection	ECC, SDDC (for x4-based memory DIMMs), ADDDC (for x4-based memory DIMMs), memory mirroring.
Disk drive bays	Up to 24x 2.5-inch hot-swap drive bays: • Up to 24x SAS/SATA drive bays, or • Up to 24x NVMe drive bays, or • Up to 24x AnyBay drive bays (support SAS or SATA or NVMe drives) Optional two 7mm hot-swap SSD drive bays at the rear of the server, either SATA or NVMe, for OS boot or storage.
Maximum internal storage	• 737.28TB using 24x 30.72TB 2.5-inch SAS/SATA SSDs • 368.64TB using 24x 15.36TB 2.5-inch NVMe SSDs • 57.6TB using 24x 2.4TB 2.5-inch HDDs Mix of NVMe/SSDs/HDDs supported.

Storage controller	• 8x Onboard SATA ports (Intel VROC SATA RAID, formerly known as Intel RSTe RAID)
	• Up to 16x Onboard NVMe ports (includes Intel VROC NVMe RAID, with optional license for non-Intel NVMe SSDs)
	• 12 Gb SAS/SATA RAID adapters:
	  ◦ RAID 530i-8i (cacheless) supports RAID 0, 1, 10, 5, 50
	  ◦ RAID 530i-16i (cacheless) supports RAID 0, 1, 10
	  ◦ RAID 930-8i with 2GB flash-backed cache supports RAID 0, 1, 10, 5, 50, 6, 60
	  ◦ RAID 930-16i with 4GB flash-backed cache supports RAID 0, 1, 10, 5, 50, 6, 60
	  ◦ RAID 940-32i with 8GB flash-backed cache supports RAID 0, 1, 10, 5, 50, 6, 60
	  ◦ RAID 940-8i with 4GB or 8GB flash-backed cache supports RAID 0, 1, 10, 5, 50, 6, 60
	  ◦ RAID 940-16i with 4GB or 8GB flash-backed cache supports RAID 0, 1, 10, 5, 50, 6, 60
	• 12 Gb SAS/SATA non-RAID:
	  ◦ 430-8i or 440-8i HBAs
	  ◦ 430-16i or 440-16i HBAs

Optical drive bays	No internal optical drive.

Components	Specification
Tape drive bays	No internal backup drive.
Network interfaces	Dedicated OCP 3.0 SFF slot with PCIe 3.0 x16 host interface. Supports a variety of 2-port and 4-port adapters with 1GbE, 10GbE and 25GbE network connectivity. One port can optionally be shared with the XClarity Controller (XCC) management processor for Wake-on-LAN and NC-SI support.
GPU support	Supports up to 2x single-wide GPUs
PCI Expansion slots	Up to 7 PCIe 3.0 slots plus an OCP 3.0 slot reserved for an Ethernet adapter. Two slots (slots 7 & 8) are on the system board, and all others are on riser cards. The slots are as follows: ● Slot 1: PCIe x16 FHHL (CPU 2) or PCIe x8 FHHL with 2-slot riser (CPU 2)* ● Slot 2: PCIe x16 FHHL (CPU 1) or PCIe x8 FHHL with 2-slot riser (CPU 2)* ● Slot 3: PCIe x16 FHHL (not present if 2-slot riser is selected) (CPU 2)* ● Slot 4: OCP 3.0 slot with PCIe x16 connection (CPU 2) ● Slot 5: PCIe x16 FHHL (CPU 4)** ● Slot 6: PCIe x16 FHHL (CPU 1)** ● Slot 7: PCIe x8 LP (CPU 1) ● Slot 8: PCIe x8 LP (CPU 1) * Slots 1, 2, and 3 are implemented using a riser. With a 3-slot riser, all slots are PCIe x16, however this riser is mutually exclusive with 8x NVMe drive connections. Alternatively, a 2-slot riser can be selected (slots 1 & 2, both PCIe x8) which allow the use of the 8x NVMe drive connections. See the System architecture section for a graphical view of the connections. The two-slot riser is used when 7mm drives occupy slot 3. ** If you select 7mm drives bays to be installed in the server, these occupy slot 3. However, the 7mm drives are also mutually exclusive with slots 5 and 6 so those slots are not available in such a configuration.
Ports	Front: One VGA video port. 1x USB 3.1 G1 (5 Gb/s) port, 1x USB 2.0 port. The USB 2.0 port can be configured to support local systems management by using the XClarity Administrator mobile app on a mobile device connected via a USB cable. Rear: Two USB 3.1 G1 (5 Gbp/s) ports, one VGA video port, one DB-9 serial port, and one RJ-45 XClarity Controller (XCC) systems management port. The serial port can be shared with the XCC for serial redirection functions.
Cooling	Six N+1 redundant hot-swap 60 mm fans (all six standard). One additional fan integrated in each power supply.
Power supply	Two hot-swap redundant AC power supplies (all 80 PLUS Platinum or Titanium certification): 750 W, 1100 W, 1800 W, and 2400 W AC options, supporting 220 V AC. The 1100 W option also supports 110V input supply. In China only, all power supply options support 240 V DC.
Video	G200 graphics with 16 MB memory with 2D hardware accelerator, integrated into the XClarity Controller. Maximum resolution is 1920x1200 32bpp at 60Hz.
Hot-swap parts	Drives, fans and power supplies.

Components	Specification
Systems management	Operator panel with status LEDs. Optional External Diagnostics Panel Handset with LCD display. Light path diagnostics for local failure detection and reporting. XClarity Controller (XCC) embedded management with remote management (via dedicated management RJ45 port) and local management (via diagnostics panel and via XClarity Mobile app on a mobile device tethered to front USB 2.0 port), XClarity Controller Enterprise enabling remote control functions, XClarity Administrator centralized infrastructure delivery, XClarity Integrator plugins, and XClarity Energy Manager centralized server power management.
Security features	Chassis intrusion switch, Power-on password, administrator's password, Trusted Platform Module (TPM), supporting TPM 2.0. In China only, optional Nationz TPM 2.0. Lockable top cover. Optional lockable front security bezel.
Operating systems supported	Microsoft Windows Server, Red Hat Enterprise Linux, SUSE Linux Enterprise Server, VMware ESXi. See the Operating system support section for specifics.
Limited warranty	Three-year or one-year (model dependent) customer-replaceable unit and onsite limited warranty with 9x5 next business day (NBD).
Service and support	Optional service upgrades are available through Lenovo Services: 4-hour or 2-hour response time, 6-hour fix time, 1-year or 2-year warranty extension, software support for Lenovo hardware and some third-party applications. Actual offering may depend on the region where the server is installed and is subject to change.
Dimensions	Width: 445 mm (17.5 inches), height: 87 mm (3.4 inches), depth: 825 mm (32.5 inches). See Physical and electrical specifications for details.
Weight	Maximum: 40 kg (88 lb)

The SR850 V2 servers are shipped with the following items:

- Documentation flyer
- Rail kit (model dependent)
- Power cords (model and region dependent)

Models

ThinkSystem SR850 V2 models can be configured by using the Lenovo Data Center Solution Configurator (DCSC).

Configure-to-order (CTO) models are used to create models with factory-integrated server customizations. For CTO models, two base CTO models are available for the SR850 V2 as listed in the following table, CTO1WW and CTOLWW:

- The CTO1WW base CTO model is for general business and is selectable by choosing **General Purpose** mode in DCSC.
- The CTOLWW base model is intended for High Performance Computing (HPC) and Artificial Intelligence (AI) configurations and solutions, including configurations for Lenovo Scalable Infrastructure (LeSI), and is enabled using either the **HPC & AI LeSI Solutions** mode or **HPC & AI Hardware** mode in DCSC. CTOLWW configurations can also be built using System x and Cluster Solutions Configurator (x-config).

Preconfigured server models may also be available for the SR850 V2, however these are region-specific; that is, each region may define their own server models, and not all server models are available in every region.

The following table lists the base CTO models of the ThinkSystem SR850 V2 server.

Table 2. Base CTO models

Machine Type/Model General purpose	Machine Type/Model for HPC and AI	Description
7D32CTO1WW	7D32CTOLWW	ThinkSystem SR850 V2 – 3-year Warranty
7D31CTO1WW	7D31CTOLWW	ThinkSystem SR850 V2 – 1-year Warranty
7D33CTO1WW	7D33CTOLWW	ThinkSystem SR850 V2 – SAP HANA configurations with 3-year warranty

Models are based on a chassis feature code. The SR850 V2 has only one chassis base, however two feature codes are currently offered. There is no technical difference between the two base feature codes.

Table 3. Chassis base feature code

Feature code	Description
BN19	ThinkSystem SR850 V2 Chassis v2
BCPH	ThinkSystem SR850 V2 Chassis

The following tables list the available models, grouped by region:

- Models for EMEA

Models for the EMEA region

The following table lists the models for the Europe, Middle East and Africa region.

Table 5. SR850 V2 models for EMEA

Model	Intel Xeon processors†	Memory	RAID	Drive bays / max 2.5" drives; 7mm drives / max	OCP	Slots	Power supplies	Rail kit‡	Intrusion‡
Standard models with a 3-year warranty (machine type 7D32)									

† Processor description: Intel processor model, number of cores, thermal design power (TDP), core frequency
‡ Rail kit: Y=Included, O=Optional; Intrusion switch: Y=Included, O=Optional

Processors

The SR850 V2 supports Gold and Platinum level processors in the third-generation Intel Xeon Scalable Processor family.

Topics in this section:

- Memory capacity of processors
- Processor features
- Two-processor configurations
- UEFI operating modes

The server supports two or four processors.

- Processors 1 and 2 are installed in sockets on the system board.
- Processors 3 and 4 are installed on the Processor and Memory Expansion Tray.

The Processor and Memory Expansion Tray has a sliding and rolling lift mechanism that requires only a one-handed operation to insert or remove from the server. It has a toolless design for superior usability, serviceability and reliability.

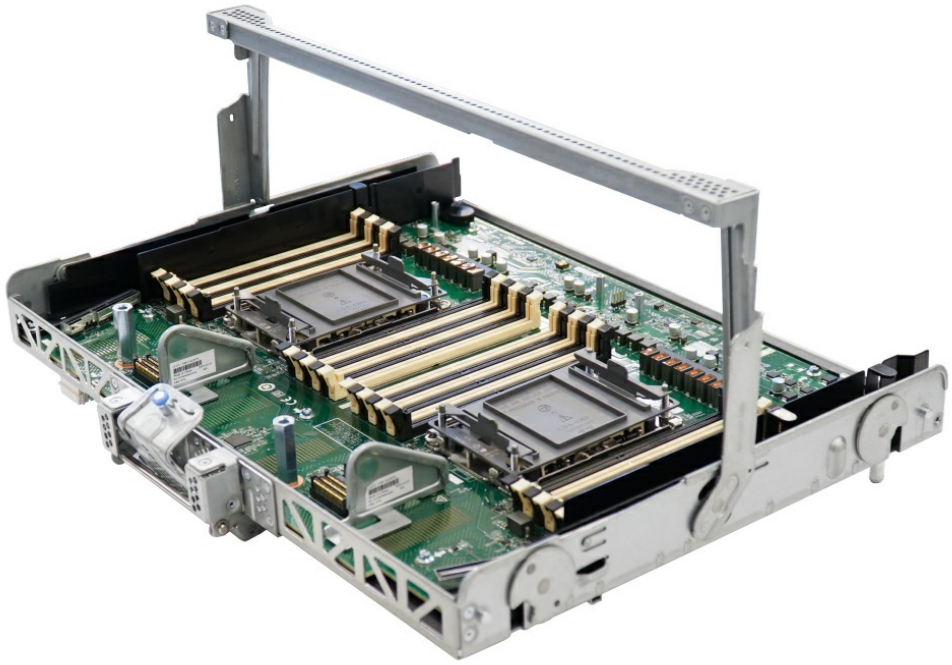

Figure 8. SR850 V2 Processor and Memory Expansion Tray

The ordering information for the Processor and Memory Expansion Tray is shown in the following table.

Table 6. Processor and Memory Expansion Tray

Part number	Feature code	Description
4B27A09313	BAVY	ThinkSystem SR850 V2 Processor and Memory Expansion Tray

The following processor quantities are supported:

- Two processors, installed in sockets 1 and 2, without the Processor and Memory Expansion Tray
- Four processors, installed in all four sockets

Note: Configurations of one or three processors are not supported.

The table below lists the supported third-generation Intel Xeon Scalable processors.

All supported processors have the following characteristics:

- Third-generation Intel Xeon Scalable processors (formerly codenamed "Cooper Lake" or CPX)
- 14 nm process technology
- Six DDR4 memory channels
- 48 PCIe 3.0 I/O lanes
- 1 MB L2 cache
- 1.375 MB or more L3 cache per core
- Six Intel Ultra Path Interconnect (UPI) links at 10.4 GT/s
- Intel Hyper-Threading Technology
- Intel Turbo Boost Technology 2.0
- Intel Advanced Vector Extensions 512 (AVX-512)
- Vector Neural Network Instructions (VNNI)
- Enhanced Deep Learning Boost (bfloat16)
- Intel Speed Select support (SST-TF and SST-CP)
- Intel Persistent Memory 200 Series support

The processors include a suffix letter in the processor model number:

- H: 4-Socket capable processor
- L: Large memory tier (supports total memory up to 4.5TB per processor)

Processors without the L suffix support up to 1.12TB per processor.

The four processors are connected together using a mesh topology. A mesh topology allows all four processors to be connected together which improves the performance of processor-to-processor communications. The SR850 V2 implements a mesh topology using 6 UPI links. The following figure shows how the SR850 V2 mesh topology is different to the ring topology of the SR850 server and the mesh topology of the SR850P server.

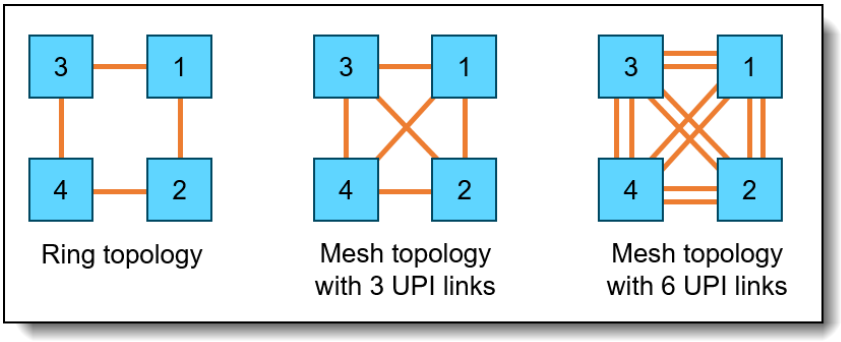

Figure 9. Ring toplogy (SR850) versus 3-UPI Mesh topology (SR850P) versus 6-UPI Mesh topology (SR850 V2)

Table 7. Processor options

Part number	Feature code	Description
4XG7A63392	BB9K	ThinkSystem SR850/SR860 V2 Gold 5318H 18C 150W 2.5GHz Processor
4XG7A63391	BB9J	ThinkSystem SR850/SR860 V2 Gold 5320H 20C 150W 2.4GHz Processor
4XG7A63389	BB9F	ThinkSystem SR850/SR860 V2 Gold 6328H 16C 165W 2.8GHz Processor
4XG7A63486	BD8D	ThinkSystem SR850/SR860 V2 Gold 6328HL 16C 165W 2.8GHz Processor
4XG7A63390	BB9G	ThinkSystem SR850/SR860 V2 Gold 6330H 24C 150W 2.0GHz Processor
4XG7A63388	BB9E	ThinkSystem SR850/SR860 V2 Gold 6348H 24C 165W 2.3GHz Processor

Part number	Feature code	Description
4XG7A63386	BB9C	ThinkSystem SR850/SR860 V2 Platinum 8353H 18C 150W 2.5GHz Processor
4XG7A63387	BB9D	ThinkSystem SR850/SR860 V2 Platinum 8354H 18C 205W 3.1GHz Processor
4XG7A63394	BB9M	ThinkSystem SR850/SR860 V2 Platinum 8356H 8C 190W 3.9GHz Processor
4XG7A63385	BB9B	ThinkSystem SR850/SR860 V2 Platinum 8360H 24C 225W 3.0GHz Processor
4XG7A63505	BDXU	ThinkSystem SR850/SR860 V2 Platinum 8360HL 24C 225W 3.0GHz Processor
4XG7A63384	BB9A	ThinkSystem SR850/SR860 V2 Platinum 8376H 28C 205W 2.6GHz Processor
4XG7A63485	BD8E	ThinkSystem SR850/SR860 V2 Platinum 8376HL 28C 205W 2.6GHz Processor
4XG7A63383	BB99	ThinkSystem SR850/SR860 V2 Platinum 8380H 28C 250W 2.9GHz Processor
4XG7A63484	BD8F	ThinkSystem SR850/SR860 V2 Platinum 8380HL 28C 250W 2.9GHz Processor

Memory capacity of processors

Third-generation Xeon Scalable processors are limited to the amount of memory they can address, as follows:

- Processors with an L suffix (eg 8360HL): Up to 4.5 TB per processor (4608 GB per processor)
- Processors without an L suffix (eg 8360H): Up to 1.125 TB per processor (1152 GB per processor)

Tip: In memory calculations for servers, 1024 GB = 1 TB.

The calculation of the total memory per processor includes both the system memory DIMMs and the persistent memory modules installed in the server.

For example, these configurations do not require an L processor:

- A configuration using 12x 64GB DIMMs per processor, which is a total of 768GB per processor
- A configuration using 6x 64GB DIMMs + 6x 128GB PMem per processor, which is a total of 1.125TB per processor

For example, these configurations must have an L processor installed:

- A configuration using 12x 128GB DIMMs per processor, which is a total of 1.5TB per processor
- A configuration using 6x 32GB DIMMs + 6x 256GB PMem, which is a total of 1.6875TB per processor

Processor features

The following table lists the features of the supported third-generation Intel Xeon processors.

Abbreviations used in the table:

- UPI: Ultra Path Interconnect
- TDP: Thermal Design Power
- FMA: Number of Intel AVX-512 Fused-Multiply Add (FMA) units
- HT: Hyper-Threading
- TB: Turbo Boost 2.0
- VT: Virtualization Technology (includes VT-x and VT-d)
- SST-PP: Speed Select Technology - Performance Profile
- PMem: Intel Optane Persistent Memory 200 Series support
- RAS: Reliability, Availability, and Serviceability: Std = Standard, Adv = Advanced

The processors that support SST-PP offer three distinct operating points that are defined by a core count with a base speed associated with that core count. The operating point is selected during the boot process and cannot be changed at runtime.

Table 8. Processor specifications

CPU model	Cores / threads	Core speed (Base / TB max)	L3 cache*	Max memory speed	Max memory per CPU	UPI links & speed	FMA units	TDP	HT	TB	VT	SST-PP	PMem	RAS
Intel Xeon 5300 (Gold) processors														
5318H	18 / 36	2.5 / 3.8 GHz	24.75 MB	2666 MHz	1.125 TB	6 / 10.4 GT/s	2	150W	Y	Y	Y	N	Y	Adv
5320H	20 / 40	2.4 / 4.2 GHz	27.5 MB	2666 MHz	1.125 TB	6 / 10.4 GT/s	2	150W	Y	Y	Y	N	Y	Adv
Intel Xeon 6300 (Gold) processors														
6328H	16 / 32	2.8 / 4.3 GHz	22 MB	2933 MHz	1.125 TB	6 / 10.4 GT/s	2	165W	Y	Y	Y	N	Y	Adv
6328HL	16 / 32	2.8 / 4.3 GHz	22 MB	2933 MHz	4.5 TB	6 / 10.4 GT/s	2	165W	Y	Y	Y	N	Y	Adv
6330H	24 / 48	2.0 / 3.7 GHz	33 MB	2933 MHz	1.125 TB	6 / 10.4 GT/s	2	150W	Y	Y	Y	N	Y	Adv
6348H	24 / 48	2.3 / 4.2 GHz	33 MB	2933 MHz	1.125 TB	6 / 10.4 GT/s	2	165W	Y	Y	Y	N	Y	Adv
Intel Xeon 8300 (Platinum) processors														
8353H	18 / 36	2.5 / 3.8 GHz	24.75 MB	3200 MHz	1.125 TB	6 / 10.4 GT/s	2	150W	Y	Y	Y	N	Y	Adv
8354H	18 / 36	3.1 / 4.3 GHz	24.75 MB	3200 MHz	1.125 TB	6 / 10.4 GT/s	2	205W	Y	Y	Y	N	Y	Adv
8356H	8 / 16	3.9 / 4.4 GHz	35.75 MB	2933 MHz	1.125 TB	6 / 10.4 GT/s	2	190W	Y	Y	Y	N	Y	Adv
8360H	24 / 48	3.0 / 4.2 GHz	33 MB	3200 MHz	1.125 TB	6 / 10.4 GT/s	2	225W	Y	Y	Y	N	Y	Adv
8360HL	24 / 48	3.0 / 4.2 GHz	33 MB	3200 MHz	4.5 TB	6 / 10.4 GT/s	2	225W	Y	Y	Y	N	Y	Adv
8376H	28 / 56	2.6 / 4.3 GHz	38.5 MB	3200 MHz	1.125 TB	6 / 10.4 GT/s	2	205W	Y	Y	Y	N	Y	Adv
8376HL	28 / 56	2.6 / 4.3 GHz	38.5 MB	3200 MHz	4.5 TB	6 / 10.4 GT/s	2	205W	Y	Y	Y	N	Y	Adv
8380H	28 / 56	2.9 / 4.3 GHz	38.5 MB	3200 MHz	1.125 TB	6 / 10.4 GT/s	2	250W	Y	Y	Y	N	Y	Adv
8380HL	28 / 56	2.9 / 4.3 GHz	38.5 MB	3200 MHz	4.5 TB	6 / 10.4 GT/s	2	250W	Y	Y	Y	N	Y	Adv

* L3 cache is 1.375 MB per core for all processors except the Platinum 8356H which has 4.47 MB per core

Two-processor configurations

The SR850 V2 can be used with only two processors installed. Most core functions of the server (including the XClarity Controller) are connected to processors 1 and 2 as shown in the System architecture section.

With only two processors, the server has the following capabilities:

- 24 memory DIMMs for a 3TB maximum
- Up to 12 PMem modules
- GPUs not supported
- Up to 8x NVMe drives
  - If the 3-slot riser is used for slots 5-7 (Riser 1), then NVMe drives are not supported

Some drive bay configurations require 4 processors. See the table in the Supported drive bay combinations section for details.

UEFI operating modes

The SR850 V2 offers preset operating modes that affect energy consumption and performance. These modes are a collection of predefined low-level UEFI settings that simplify the task of tuning the server to suit your business and workload requirements.

The following table lists the feature codes that allow you to specify the mode you wish to preset in the factory for CTO orders.

Table 9. UEFI operating mode presets in DCSC

Feature code	Description
BFYB	Operating mode selection for: "Maximum Performance Mode"
BFYC	Operating mode selection for: "Minimal Power Mode"
BFYD	Operating mode selection for: "Efficiency Favoring Power Savings Mode"
BFYE	Operating mode selection for: "Efficiency - Favoring Performance Mode"

The preset modes for the SR850 V2 are as follows:

- **Maximum Performance Mode** (feature BFYB): Achieves maximum performance but with higher power consumption and lower energy efficiency.
- **Minimal Power Mode** (feature BFYC): Minimize the absolute power consumption of the system.
- **Efficiency Favoring Power Savings Mode** (feature BFYD): Maximize the performance/watt efficiency with a bias towards power savings. This is the favored mode for SPECpower benchmark testing, for example.
- **Efficiency Favoring Performance Mode** (feature BFYE): Maximize the performance/watt efficiency with a bias towards performance. This is the favored mode for Energy Star certification, for example.

For details about these preset modes, and all other performance and power efficiency UEFI settings offered in the SR850 V2, see the paper "Tuning UEFI Settings for Performance and Energy Efficiency on Intel Xeon Scalable Processor-Based ThinkSystem Servers", available from https://lenovopress.lenovo.com/lp1477.

Memory options

The SR850 V2 uses Lenovo TruDDR4 memory and supports 12 DIMMs per processor, which corresponds to 48 DIMMs with four processors installed. Each processor has six memory channels with two DIMMs per channel. With 256 GB 3DS RDIMMs installed, a 4-socket server supports a total of 12 TB of system memory.

The SR850 V2 also supports Intel Optane Persistent Memory 200 Series, as described in the Persistent Memory section.

Memory operates at up to 3200 MHz at two DIMMs per channel, depending on the processor model selected. If the processor selected has a memory bus speed of 2666 MHz or 2933 MHz, then all DIMMs will operate at that speed.

The following table lists the memory options that are available for the server.

Lenovo TruDDR4 memory uses the highest quality components that are sourced from Tier 1 DRAM suppliers and only memory that meets the strict requirements of Lenovo is selected. It is compatibility tested and tuned to maximize performance and reliability. From a service and support standpoint, Lenovo TruDDR4 memory automatically assumes the system warranty, and Lenovo provides service and support worldwide.

Table 10. Memory options

Part number	Feature code	Description	Maximum supported
RDIMMs			
4X77A08632	B963	ThinkSystem 16GB TruDDR4 3200MHz (2Rx8 1.2V) RDIMM	48 (12 per processor)
4X77A08633	B964	ThinkSystem 32GB TruDDR4 3200MHz (2Rx4 1.2V) RDIMM	48 (12 per processor)
4X77A08634	B965	ThinkSystem 32GB TruDDR4 3200MHz (2Rx8 1.2V) RDIMM	48 (12 per processor)
4X77A08635	B966	ThinkSystem 64GB TruDDR4 3200MHz (2Rx4 1.2V) RDIMM	48 (12 per processor)
3DS RDIMMs			
4X77A08636	BA62	ThinkSystem 128GB TruDDR4 3200 MHz (2S2Rx4 1.2V) 3DS RDIMM	48 (12 per processor)
4ZC7A08727	B4Y3	ThinkSystem 256GB TruDDR4 2933MHz (8Rx4 1.2V) 3DS RDIMM	48 (12 per processor)

The following rules apply when selecting the memory configuration:

- Only specific DIMM quantities are supported:
  - For 16GB and 256GB DIMMs, only quantities of 1, 4, 6 or 12 DIMMs per processor are supported
  - For 32GB, 64GB and 128GB DIMMs, only quantities of 1, 4, 6, 8 or 12 DIMMs per processor are supported
- The server supports RDIMMs and 3DS RDIMMs; UDIMMs and LRDIMMs are not supported
- Mixing RDIMMs and 3DS RDIMMs is not supported
- Mixing 128GB and 256GB 3DS RDIMMs is not supported
- Mixing x4 and x8 DIMMs is supported
- Additional restrictions may apply when mixing DIMM capacities – use the Memory Wizard to determine if your memory configuration is supported.
- If 128GB or 256GB 3DS DIMMs are selected, at most 24 front drive bays can be configured
- If 256GB 3DS DIMMs are selected, at most 16 front drive bays can be configured

For best performance, consider the following:

- Populate memory DIMMs in quantities of 6 or 12 per processor, so that all memory channels are used.
- Populate memory channels so they all have the same total memory capacity.
- Ensure all memory controllers on a processor socket have the same DIMM configuration.
- All processor sockets on the same physical server should have the same DIMM configuration.

The following memory protection technologies are supported:

- ECC
- SDDC (for x4-based memory DIMMs; look for "x4" in the DIMM description)
- ADDDC (for x4-based memory DIMMs)
- Memory mirroring

See the Lenovo Press article "RAS Features of the Lenovo ThinkSystem Intel Servers" for more information about memory RAS features: https://lenovopress.lenovo.com/lp1711-ras-features-of-the-lenovo-thinksystem-intel-servers

If memory channel mirroring is used, then DIMMs must be installed in pairs or sets of three (minimum of one pair or set of three per processor), and all DIMMs in the pair or set of three must be identical in type and size. 50% of the installed capacity is available to the operating system.

Persistent memory

The SR850 V2 server supports Intel Optane Persistent Memory 200 Series, a new class of memory and storage technology explicitly architected for data center usage. Persistent memory is an innovative technology that delivers a unique combination of affordable large memory capacity and persistence (non-volatility). It offers significantly lower latency than fetching data from SSDs, even NVMe SSDs, and offers higher capacities than system memory.

Persistent memory technology can help boost the performance of data-intensive applications such as SAP HANA. When data is stored closer to the processor on nonvolatile media, applications can see significant overall improvement in performance.

The following table lists the ordering information for the supported persistent memory modules.

Table 11. Persistent memory module part numbers

Part number	Feature code	Description	Maximum supported
4ZC7A08732	B98B	ThinkSystem 128GB TruDDR4 3200MHz (1.2V) Intel Optane Persistent Memory	24 (6 per processor)
4ZC7A08734	B98A	ThinkSystem 256GB TruDDR4 3200MHz (1.2V) Intel Optane Persistent Memory	24 (6 per processor)
4ZC7A08736	BB8T	ThinkSystem 512GB TruDDR4 3200MHz (1.2V) Intel Optane Persistent Memory	24 (6 per processor)

The following are the requirements when installing persistent memory (PMem) modules:

- Only App Direct Mode is supported. Memory Mode and Mixed Mode are not supported.
- All processors that the SR850 V2 supports also support the PMem modules listed in the table below.
- All PMem modules operate at 2666 MHz. Installed memory DIMMs will also operate at 2666 MHz.
- All installed PMem modules must be the same size. Mixing PMem modules of different capacities is not supported.
- Maximum 6 PMem modules per processor (install 1 in each memory channel).
- For each memory channel with both a PMem module and a memory DIMM installed, the PMem module is installed in channel slot 1 (DIMM1, closer to the processor) and the DIMM is installed in channel slot 0 (DIMM0).
- Both interleaved and non-interleaved modes are supported.
- To maximize performance, balance all memory channels
- Memory mirroring is not supported with PMem modules installed
- Ambient temperature cannot exceed 30°C
- Only the following operating systems support PMem modules in the SR850 V2:
  - SUSE Linux Enterprise Server 15 SP2 or later
  - SUSE Linux Enterprise Server 15 Xen SP2 or later

In App Direct Mode, only the combinations of RDIMMs and PMem modules listed in the following table are supported. A required RDIMM:PMem ratio of between 1:1 and 1:4 must be met.

Tip: 16GB DIMMs are not supported in App Direct Mode because they do not meet the required 1:4 ratio.

Table 12. Supported App Direct Mode RDIMM/PMem combinations - 4-socket servers

Total installed per processor*	App Direct mode ratio†	Quantity of memory RDIMMs (per processor)					Quantity of persistent memory modules (per processor)			Processor required‡
		16GB	32GB	64GB	128GB	256GB	128GB PMem	256GB PMem	512GB PMem	
960 GB	1 : 4		6				6			H or HL
1.125 TB	1 : 2			6			6			H or HL
1.5 TB	1 : 1				6		6			HL required
1.875 TB	1 : 4			6				6		HL required
2.25 TB	1 : 2				6			6		HL required
3 TB	1 : 1					6		6		HL required
3.75 TB	1 : 4				6				6	HL required
4.5 TB	1 : 2					6			6	HL required

* The actual user capacity of PMem modules is less than the stated amount. For example, a 128GB PMem module has 126.7GB usable storage.
† Density ratio of system memory to persistent memory, RDIMM:PMem; 4-Socket-capable third-generation Intel Xeon Scalable processors only support RDIMM:Pmem density ratios of between 1:1 and 1:4
‡ See the Memory capacity of processors section for more information

PMem modules offer the following memory protection technologies:

- ECC
- Device failure recovery - SDDC
- Die sparing - DDDC
- Patrol scrubbing

For more information, see the Intel Optane Persistent Memory 200 Series product guide, https://lenovopress.com/LP1380

Internal storage

The SR850 V2 supports up to 24x 2.5-inch drive bays, all of which can be SAS/SATA, NVMe or AnyBay drive bays (AnyBay supports SAS, SATA or NVMe drives). All 24x drive bays are hot-swap and all front-accessible. The server also supports rear-accessible hot-swap 7mm SSDs, either SATA or NVMe.

In this section:

- NVMe drive support
- Front drive bays
- Supported drive bay combinations
- Controller selections
- Field upgrades
- RAID flash power module (supercap) support
- 7mm drives
- SED encryption key management with ISKLM

NVMe drive support

The SR850 V2 supports up to 24x NVMe drives to maximize storage performance.

- Up to 16 NVMe drives with direct connections to the processors
  - No oversubscription (each x4 drive has a full x4 (4 lanes) connection to the processor)
  - 4 drives are connected to each processor for balanced performance
  - 16 NVMe drives precludes the use of the 3-slot riser (Slots 1-3). See I/O expansion options for details.
- Up to 24 NVMe drives using 16 direct connections plus NVMe switch adapters adapters
  - First 16 drives have no oversubscription (each x4 drive has a full x4 (4 lanes) connection to the processor)
  - Remaining 8 drives are connected to two 1610-8P switch adapters, each with only 4 drives attached (no oversubscription)

Riser 1 support with NVMe drives: The use of the 3-slot riser for Riser 1 (slots 1-3) is mutually exclusive with 8 of the onboard NVMe ports as they use the same connectors. See the System architecture and I/O expansion options sections for details.

The specifics of these configurations are covered in the Supported drive bay combinations and Controller selections sections.

The tables in those sections indicate the number of NVMe drives in each configuration plus the subscription ratio. The subscription ratio is the number of PCIe lanes from the processor compared to the number of lanes to the drives. A ratio of 1:1 means all drives get the full number of lanes they need to maximize drive performance (currently 4 lanes per drive). A ratio of 2:1 means each drive only gets the half the bandwidth from the processor.

In addition, the server supports two 7mm NVMe drives for use as boot drives. These two drives are connected via separate RAID controller connected to a single PCIe 3.0 x2 host interface. See the 7mm drives section for details.

Tri-Mode support

The RAID 940-8i and RAID 940-16i adapters also support NVMe through a feature named Tri-Mode support (or Trimode support). This feature enables the use of NVMe U.3 drives at the same time as SAS and SATA drives. Cabling of the controller to the backplanes is the same as with SAS/SATA drives, and the NVMe drives are connected via a PCIe x1 link to the controller.

NVMe drives connected using Tri-Mode support provide better performance than SAS or SATA drives: A SATA SSD has a data rate of 6Gbps, a SAS SSD has a data rate of 12Gbps, whereas an NVMe U.3 Gen 4 SSD with a PCIe x1 link will have a data rate of 16Gbps. NVMe drives typically also have lower latency and higher IOPS compared to SAS and SATA drives. Tri-Mode is supported with U.3 NVMe drives in either 2.5-inch and 3.5-inch form factor and requires an AnyBay backplane.

Tri-Mode requires U.3 drives: Only NVMe drives with a U.3 interface are supported. U.2 drives are not supported. See the Internal drive options section for the U.3 drives supported by the server.

Front drive bays

The front drive bay are configured using 8-bay backplanes. The three available backplanes are:

- 8-bay 2.5-inch SAS/SATA backplane
- 8-bay 2.5-inch AnyBay backplane
- 8-bay 2.5-inch NVMe backplane

Tip: The SR850 V2 does not support 3.5-inch drive bays.

The locations of the backplanes is shown in the following figure.

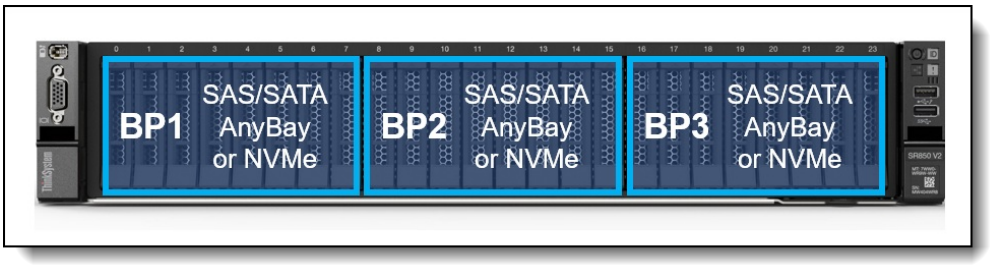

Figure 10. SR850 V2 backplanes

The server supports combinations of these drive backplanes as listed in the Supported drive bay combinations section.

Ordering information for the backplanes is listed in the following table.

Field upgrades: All front backplanes are available as part numbers for field upgrades along with require cable option kits, as described in the Field upgrades section below.

Table 13. Backplanes for front drive bays

Feature code	Description	Maximum supported
B8LU	ThinkSystem 2U 8x2.5" SAS/SATA Backplane	3
B8LM	ThinkSystem 2U/4U 8x2.5" AnyBay Backplane	3
BCQM	ThinkSystem 2U/4U 8x2.5" NVMe Backplane	3

Common backplanes: The AnyBay and NVMe backplanes listed in the above table use the same physical circuit board. Feature codes B8LM and BCQM use a backplane with eight bays where each bay has both a SAS/SATA connection and an NVMe connection. The difference is which connectors on the backplane are cabled: NVMe and SAS/SATA or just NVMe. Both feature codes use backplane SBB7A06906.

Supported drive bay combinations

The following table shows the supported drive bay combinations - SAS/SATA, AnyBay or NVMe drives. The table lists the backplanes required for each drive bay combination.

Some configurations require 4 processors be installed. This is noted in the table.

The table indicates whether the combination permits the use of the 3-slot riser in Riser 1 (slots 1-3). Those configurations that don't support the 3-slot riser have 16 or more AnyBay or NVMe drives, or are an upgrade path for 16 drives. Such configurations can use the 2-slot riser (slots 1 & 2) instead.

The choice of storage controller for each configuration is listed in the Controller selections section.

Table 14. Drive bay combinations (Blue = SAS/SATA, Purple = AnyBay, Red = NVMe)

Cfg	CPUs	Total drives	Total NVMe§	SAS/SATA	AnyBay	NVMe	Front backplanes	7mm drive support†	3-Slot Riser 1 support‡
A	2 or 4	8	0	8	0	0	1x SAS/SATA	Yes	Yes
B	2 or 4	16	0	16	0	0	2x SAS/SATA	Yes	Yes
C	2 or 4	24	0	24	0	0	3x SAS/SATA	Yes	Yes
D	2 or 4	8	8 (1:1)	0	8	0	1x AnyBay	Yes*	Yes**
E	4	16	16 (1:1)	0	16	0	2x AnyBay	Yes	No
F	2 or 4	8	8 (1:1)	0	0	8	1x NVMe	No	No
G	4	16	16 (1:1)	0	0	16	2x NVMe	No	No
H	4	24	24 (1:1)	0	0	24	3x NVMe	No	No
I	2 or 4	16	8 (1:1)	8	8	0	1x SAS/SATA + 1x AnyBay	Yes	No
J	4	24	16 (1:1)	8	16	0	1x SAS/SATA + 2x AnyBay	Yes*	Yes**
K	2 or 4	24	8 (1:1)	16	8	0	2x SAS/SATA + 1x AnyBay	Yes*	Yes**
L	4	24	24 (1:1)	0	24	0	3x AnyBay	No	No

§ The text in parenthesis refers to the subscription ratio. See the NVMe support section for details.
† Indicates whether or not the configuration supports the use of 7mm drive bays at the rear of the server
‡ Indicates whether or not the configuration (or a configuration in the upgrade path) supports the 3-slot riser in Riser 1, slots 1-3 (ThinkSystem SR850/SR860 V2 x16/x16/x16 PCIe FH Riser 1, feature code BAW7)
* Depending on the controllers used in this configuration, the 7mm drive bays may not be supported. See Controller selections section for details.
** Depending on the controllers used in this configuration, the 3-Slot Riser 1 may not be supported. See Controller selections section for details.

Controller selections

This section helps you determine with storage adapter are supported for your desired drive bay configuration.

In the tables, the controllers are grouped as follows:

- RAID/HBA 8i corresponds to any of the following:

    - ThinkSystem RAID 530-8i PCIe 12Gb Adapter, 7Y37A01082
    - ThinkSystem RAID 5350-8i PCIe 12Gb Adapter, 4Y37A72482
    - ThinkSystem RAID 540-8i PCIe Gen4 12Gb Adapter, 4Y37A78834
    - ThinkSystem RAID 930-8i 2GB Flash PCIe 12Gb Adapter, 7Y37A01084
    - ThinkSystem RAID 9350-8i 2GB Flash PCIe 12Gb Adapter, 4Y37A72483
    - ThinkSystem RAID 940-8i 4GB Flash PCIe Gen4 12Gb Adapter, 4Y37A09728
    - ThinkSystem RAID 940-8i 8GB Flash PCIe Gen4 12Gb Adapter, 4Y37A09729
    - ThinkSystem 430-8i SAS/SATA 12Gb HBA, 7Y37A01088
    - ThinkSystem 4350-8i SAS/SATA 12Gb HBA, 4Y37A72480
    - ThinkSystem 440-8i SAS/SATA PCIe Gen4 12Gb HBA, 4Y37A78601
- RAID/HBA 16i corresponds to any of the following:
    - ThinkSystem RAID 530-16i PCIe 12Gb Adapter, 4Y37A09727
    - ThinkSystem RAID 540-16i PCIe Gen4 12Gb Adapter, 4Y37A78835
    - ThinkSystem RAID 930-16i 4GB Flash PCIe 12Gb Adapter, 7Y37A01085
    - ThinkSystem RAID 9350-16i 4GB Flash PCIe 12Gb Adapter, 4Y37A72485
    - ThinkSystem RAID 940-16i 4GB Flash PCIe Gen4 12Gb Adapter, 4Y37A78600
    - ThinkSystem RAID 940-16i 8GB Flash PCIe Gen4 12Gb Adapter, 4Y37A09730
    - ThinkSystem 430-16i SAS/SATA 12Gb HBA, 7Y37A01089
    - ThinkSystem 4350-16i SAS/SATA 12Gb HBA, 4Y37A72481
    - ThinkSystem 440-16i SAS/SATA PCIe Gen4 12Gb HBA, 4Y37A78602
- RAID 32i corresponds to the following:
    - ThinkSystem RAID 940-32i 8GB Flash PCIe Gen4 12Gb Adapter, 4Y37A09733
- 1610-8P corresponds to the following:
    - ThinkSystem 1610-8P NVMe Switch Adapter, 4Y37A09764
- Retimer corresponds to the following:
    - ThinkSystem 4-Port PCIe Gen4 NVMe Retimer Adapter, 4C57A65446
- OB SATA (onboard SATA) corresponds to the following in CTO orders:
    - On Board SATA Software RAID Mode, feature AVV0
- OB NVMe (onboard NVMe) corresponds to the following in CTO orders:
    - Non RAID NVMe, feature BC4V
    - Intel VROC (VMD NVMe RAID) Intel SSD Only, feature B9X7
    - Intel VROC (VMD NVMe RAID) Premium, feature B96G

All configurations also support the 7mm rear drive bays (which can can be either SATA or NVMe). See the 7mm drives section for details.

The following table lists the supported drive bay combinations, plus the list of supported controller combinations supported by each of those drive bay combinations. Information about the controllers can be found in the Controllers for internal storage section.

Some configurations require 4 processors be installed. This is noted in the table.

The table also indicates whether the combination permits the use of the 3-slot riser (slots 5-7). Those configurations that don't support the 3-slot riser have 16 or more AnyBay or NVMe drives, or are an upgrade path for 16 drives. Such configurations can use the 2-slot riser (slots 5 & 6) instead.

Table 15. Controller selections (Blue = SAS/SATA, Purple = AnyBay, Red = NVMe)

Cfg	SAS/SATA	AnyBay	NVMe	CPUs	7mm drive support	3-Slot Riser 1 support	Adapter combinations (drive count) (OB = Onboard)
A	8	0	0	2 or 4	Yes	Yes	OB SATA (8)
				2 or 4	Yes	Yes	1x RAID/HBA 8i (8)
				2 or 4	Yes	Yes	1x 430/530-8i (8)
				2 or 4	Yes	Yes	1x RAID/HBA 16i (16)

Cfg	SAS/SATA	AnyBay	NVMe	CPUs	7mm drive support	3-Slot Riser 1 support	Adapter combinations (drive count) (OB = Onboard)
B	16	0	0	2 or 4	Yes	Yes	1x RAID/HBA 16i (16)
C	24	0	0	2 or 4	Yes	Yes	1x RAID/HBA 8i (8) + 1x RAID/HBA 16i (16)
				2 or 4	Yes	Yes	OB SATA (8) + 1x RAID/HBA 16i (16)
				2 or 4	Yes	Yes	1x RAID/HBA 8i (8) + 1x RAID/HBA 16i (16)
				2 or 4	Yes	Yes	1x RAID 32i (24)
				2 or 4	Yes	Yes	3x 430/530-8i (8)
D	0	8	0	2 or 4	Yes	No	1x RAID/HBA 8i (8) + OB NVMe (8)
				2 or 4	Yes	No	OB SATA (8) + OB NVMe (8)
				2 or 4	Yes	No	1x RAID/HBA 8i (8) + OB NVMe (8)
				2 or 4	Yes	No	OB SATA (8) + OB NVMe (8)
				4	No	Yes	1x RAID/HBA 8i (8) + OB NVMe (8) (NVMe connectors on expansion tray)
				4	No	Yes	OB SATA (8) + OB NVMe (8) (NVMe connectors on expansion tray)
				2 or 4	No	No	1x RAID/HBA 8i (8) + OB NVMe (8)
E	0	16	0	4	Yes	No	1x RAID/HBA 16i (16) + OB NVMe (16)
F	0	0	8	2 or 4	No	No	OB NVMe (8)
G	0	0	16	4	No	No	OB NVMe (16)
H	0	0	24	4	No	No	OB NVMe (16) + 2x Retimer (4+4)
I	8	8	0	2 or 4	Yes	No	1x RAID/HBA 16i (16) + OB NVMe (8)
				2 or 4	Yes	No	1x RAID/HBA 16i (16) + OB NVMe (8)
J	8	16	0	4	Yes	No	1x RAID/HBA 8i (8) + 1x RAID/HBA 16i (16) + OB NVMe (16)
				4	Yes	No	1x RAID/HBA 8i (8) + 1x RAID/HBA 16i (16) + OB NVMe (16)
				4	Yes	No	OB SATA (8) + 1x RAID/HBA 16i (16) + OB NVMe (16)
				4	No	No	1x RAID 32i (24) + OB NVMe (16) (8x NVMe connectors on expansion tray)
				4	No	No	1x RAID/HBA 8i (8) + 1x RAID/HBA 16i (16) + OB NVMe (16)
				4	No	Yes	1x RAID/HBA 8i (8) + 1x RAID/HBA 16i (16) + OB NVMe (8) + 2x Retimer (4+4) (NVMe connectors on expansion tray)
K	16	8	0	2 or 4	Yes	No	1x RAID/HBA 8i (8) + 1x RAID/HBA 16i (16) + OB NVMe (8)
				2 or 4	Yes	No	OB SATA (8) + 1x RAID/HBA 16i (16) + OB NVMe (8)
				2 or 4	Yes	No	1x RAID/HBA 8i (8) + 1x RAID/HBA 16i (16) + OB NVMe (8)
				2	Yes	No	1x RAID 32i (24) + OB NVMe (8)
				4	No	Yes	OB SATA (8) + 1x RAID/HBA 16i (16) + OB NVMe (8) (NVMe connectors on expansion tray)
				4	No	Yes	OB SATA (8) + 1x RAID/HBA 16i (16) + OB NVMe (8) (NVMe connectors on expansion tray)
				2 or 4	No	No	1x RAID 32i (24) + OB NVMe (8)
L	0	24	0	4	No	No	1x RAID/HBA 8i (8) + 1x RAID/HBA 16i (16) + OB NVMe (16) + 2x Retimer (4+4)
				4	No	No	1x RAID 32i (24) + OB NVMe (16) + 2x Retimer (4+4)

Field upgrades

The SR850 V2 is orderable without drive bays, allowing you to add a backplane, cabling and controllers as field upgrades. The server also supports upgrading some configurations by adding additional front drive bays, adapters, and cables.

Each row of the following table represents a supported upgrade path. Any other upgrades may not be supported.

Configuration numbering: The letters A-K in the first two columns match the configurations listed in the tables in the preceding sections.

To add drive bays you will need to order both drive backplanes and cable kits. Backplane kits do not include cables.

Table 16. Field upgrades

Starting config	Target config	Starting drive bays and controller(s)			Target drive bays and controller(s)			Parts needed for upgrade (adapters*, backplanes and cables). All components needed for upgrade.
		S/S	Any	NVMe	S/S	Any	NVMe	
A	C	8	0	0	24	0	0	• 2x RAID/HBA 8i Adapter • 2x 4C57A15013, 2U 2.5" SAS/SATA 8-Bay BP Kit • 1x 4X97A59829, Cable Kit
		1x 430/530-8i (8)			3x 430/530-8i (8)			
A	B	8	0	0	16	0	0	• 1x 4C57A15013, 2U 2.5" SAS/SATA 8-Bay BP Kit • 1x 4X97A59829, Cable Kit
		1x RAID/HBA 16i (16)			1x RAID/HBA 16i (16)			
A	C	8	0	0	24	0	0	• 1x RAID/HBA 8i Adapter • 2x 4C57A15013, 2U 2.5" SAS/SATA 8-Bay BP Kit • 1x 4X97A59829, Cable Kit
		1x RAID/HBA 16i (16)			1x RAID/HBA 8i (8) + 1x RAID/HBA 16i (16)			
A	C	8	0	0	24	0	0	• 1x RAID/HBA 16i Adapter • 2x 4C57A15013, 2U 2.5" SAS/SATA 8-Bay BP Kit • 1x 4X97A59829, Cable Kit
		1x RAID/HBA 8i (8)			1x RAID/HBA 8i (8) + 1x RAID/HBA 16i (16)			
A	C	8	0	0	24	0	0	• 1x RAID/HBA 16i Adapter • 2x 4C57A15013, 2U 2.5" SAS/SATA 8-Bay BP Kit • 1x 4X97A59829, Cable Kit
		OB SATA (8)			OB SATA (8) + 1x RAID/HBA 16i (16)			
B	C	16	0	0	24	0	0	• 1x RAID/HBA 8i Adapter • 1x 4C57A15013, 2U 2.5" SAS/SATA 8-Bay BP Kit • 1x 4X97A59829, Cable Kit
		1x RAID/HBA 16i (16)			1x RAID/HBA 8i (8) + 1x RAID/HBA 16i (16)			
D	J	0	8	0	8	16	0	• 1x RAID/HBA 16i Adapter • 1x 4C57A15015, 2U 2.5" AnyBay 8-Bay BP Kit • 1x 4C57A15013, 2U 2.5" SAS/SATA 8-Bay BP Kit • 1x 4X97A59829, Cable Kit • 1x 4X97A59821, Onboard PCIe NVMe Cable Kit
		1x RAID/HBA 8i (8) + OB NVMe (8)			1x RAID/HBA 8i (8) + 1x RAID/HBA 16i (16) + OB NVMe (16)			
D	J	0	8	0	8	16	0	• 1x RAID/HBA 16i Adapter • 1x 4C57A15015, 2U 2.5" AnyBay 8-Bay BP Kit • 1x 4C57A15013, 2U 2.5" SAS/SATA 8-Bay BP Kit • 1x 4X97A59829, Cable Kit • 1x 4X97A59821, Onboard PCIe NVMe Cable Kit
		1x RAID/HBA 8i (8) + OB NVMe (8)			1x RAID/HBA 8i (8) + 1x RAID/HBA 16i (16) + OB NVMe (16)			
D	K	0	8	0	16	8	0	• 1x RAID/HBA 16i Adapter • 2x 4C57A15013, 2U 2.5" SAS/SATA 8-Bay BP Kit • 1x 4X97A59829, Cable Kit
		1x RAID/HBA 8i (8) + OB NVMe (8)			1x RAID/HBA 8i (8) + 1x RAID/HBA 16i (16) + OB NVMe (8)			
D	K	0	8	0	16	8	0	• 1x RAID/HBA 16i Adapter • 2x 4C57A15013, 2U 2.5" SAS/SATA 8-Bay BP Kit • 1x 4X97A59829, Cable Kit
		1x RAID/HBA 8i (8) + OB NVMe (8) (NVMe connectors on expansion tray)			OB SATA (8) + 1x RAID/HBA 16i (16) + OB NVMe (8) (NVMe connectors on expansion tray)			

Starting config	Target config	Starting drive bays and controller(s)			Target drive bays and controller(s)			Parts needed for upgrade (adapters*, backplanes and cables). All components needed for upgrade.
		S/S	Any	NVMe	S/S	Any	NVMe	
D	J	0	8	0	8	16	0	• 1x RAID/HBA 16i Adapter • 1x 4C57A15015, 2U 2.5" AnyBay 8-Bay BP Kit • 1x 4C57A15013, 2U 2.5" SAS/SATA 8-Bay BP Kit • 1x 4X97A59829, Cable Kit • 1x 4X97A59821, Onboard PCIe NVMe Cable Kit
		OB SATA (8) + OB NVMe (8)			OB SATA (8) + 1x RAID/HBA 16i (16) + OB NVMe (16)			
D	K	0	8	0	16	8	0	• 1x RAID/HBA 16i Adapter • 2x 4C57A15013, 2U 2.5" SAS/SATA 8-Bay BP Kit • 1x 4X97A59829, Cable Kit
		OB SATA (8) + OB NVMe (8)			OB SATA (8) + 1x RAID/HBA 16i (16) + OB NVMe (8)			
D	K	0	8	0	16	8	0	• 1x RAID/HBA 16i Adapter • 2x 4C57A15013, 2U 2.5" SAS/SATA 8-Bay BP Kit • 1x 4X97A59829, Cable Kit
		OB SATA (8) + OB NVMe (8) (NVMe connectors on expansion tray)			OB SATA (8) + 1x RAID/HBA 16i (16) + OB NVMe (8) (NVMe connectors on expansion tray)			
E	J	0	16	0	8	16	0	• 1x RAID/HBA 8i Adapter • 1x 4C57A15013, 2U 2.5" SAS/SATA 8-Bay BP Kit • 1x 4X97A59829, Cable Kit
		1x RAID/HBA 16i (16) + OB NVMe (16)			1x RAID/HBA 8i (8) + 1x RAID/HBA 16i (16) + OB NVMe (16)			
F	G	0	0	8	0	0	16	• 1x 4C57A15016, 2U 2.5" NVMe 8-Bay BP Kit • 1x 4X97A59821, Onboard PCIe NVMe Cable Kit
		OB NVMe (16)			OB NVMe (16) + 2x 1610-8P (4+4)			
I	E	8	8	0	0	16	0	• 1x 4C57A15015, 2U 2.5" AnyBay 8-Bay BP Kit • Remove 1x existing SAS/SATA backplane • 1x 4X97A59821, Onboard PCIe NVMe Cable Kit
		1x RAID/HBA 16i (16) + OB NVMe (8)			1x RAID/HBA 16i (16) + OB NVMe (16)			
I	J	8	8	0	8	16	0	• 1x RAID/HBA 8i Adapter • 1x 4C57A15015, 2U 2.5" AnyBay 8-Bay BP Kit • 1x 4X97A59829, Cable Kit • 1x 4X97A59821, Onboard PCIe NVMe Cable Kit
		1x RAID/HBA 16i (16) + OB NVMe (8)			1x RAID/HBA 8i (8) + 1x RAID/HBA 16i (16) + OB NVMe (16)			
I	K	8	8	0	16	8	0	• 1x RAID/HBA 8i Adapter • 1x 4C57A15013, 2U 2.5" SAS/SATA 8-Bay BP Kit • 1x 4X97A59829, Cable Kit
		1x RAID/HBA 16i (16) + OB NVMe (8)			1x RAID/HBA 8i (8) + 1x RAID/HBA 16i (16) + OB NVMe (8)			
K	J	16	8	0	8	16	0	• 1x 4C57A15015, 2U 2.5" AnyBay 8-Bay BP Kit • Remove 1x existing SAS/SATA backplane • 1x 4X97A59821, Onboard PCIe NVMe Cable Kit
		1x RAID 32i (24) + OB NVMe (8)			1x RAID 32i (24) + OB NVMe (16) (8x NVMe connectors on expansion tray)			

* Abbreviations such as "RAID/HBA 16i Adapter" refer to a group of supported adapters; these are described in the Controller selections section

Cable kits for field upgrades

The following table lists the contents of each cable kits that is used as described in the preceding Field upgrades section.

Table 17. Contents of the cable option kits

Part number	Description and contents
4X97A59821	ThinkSystem SR860 V2 onboard PCIe NVMe Cable Accessories Kit • 1x SBB7A16998 - PCIe Cable: Sliver to BP (Sliver x16 to 2x MICO x8), 530mm • 1x SBB7A23739 - PCIe Cable: Sliver to BP (Sliver x16 to 2x MICO x8), 670mm
4X97A59822	ThinkSystem SR860 V2/SR850 V2 Switch/Retimer NVMe Cable Accessories Kit • 4x SBB7A16999 - PCIe Cable: Re-Timer Card to BP (Slimline x8 to 1x MICO x8), 970mm
4X97A59829	ThinkSystem SR850 V2 8i/16i RAID Cable Accessories Kit • 1x SBB7A16992 - SAS Cable: RAID Card to BP (MiniSAS x8 to 2x Slimline x4), 665mm • 1x SBB7A16989 - SAS Cable: RAID Card to BP (MiniSAS x8 to 2x Slimline x4), 860mm • 1x SBB7A16990 - SAS Cable: RAID Card to BP (MiniSAS x8 to 2x Slimline x4), 1000mm • 1x SBB7A15182 - SAS Cable: RAID Card to BP (Slimline x8 to 2x Slimline x4), 860mm • 1x SBB7A15183 - SAS Cable: RAID Card to BP (Slimline x8 to 2x Slimline x4), 1000mm

When adding drive bays, you will also need to add the appropriate storage controller(s). Consult the tables in the Controller selections section to determine what controller sections are supported and what additional controllers you will need. Controllers are described in the Controllers for internal storage section.

RAID flash power module (supercap) support

All RAID 930 and RAID 940 adapters include a RAID flash power module (supercap). If you plan to add one of these adapters as a field upgrade, then you will also need to order a Supercap Holder Kit. For CTO orders, the components needed are automatically derived when you select the RAID adapter.

The SR850 V2 supports at most 2 supercaps, and by extension, only supports two of these adapters.

The RAID adapters that require a supercap holder are as follows:

- ThinkSystem RAID 930-8i 2GB Flash PCIe 12Gb Adapter
- ThinkSystem RAID 930-16i 4GB Flash PCIe 12Gb Adapter
- ThinkSystem RAID 940-8i 4GB Flash PCIe Gen4 12Gb Adapter
- ThinkSystem RAID 940-8i 8GB Flash PCIe Gen4 12Gb Adapter
- ThinkSystem RAID 940-16i 8GB Flash PCIe Gen4 12Gb Adapter
- ThinkSystem RAID 940-32i 8GB Flash PCIe Gen4 12Gb Adapter
- ThinkSystem RAID 930-8e 4GB Flash PCIe 12Gb Adapter

Ordering information and the contents of the kit are listed in the following table.

Table 18. Supercap Holder Kit

Part number	Description	Maximum supported
4M27A11825	ThinkSystem SR850 V2 Supercap Holder Kit • 1x 2U riser bracket (only needed if the server does not include a riser) • 2x horizontal supercap holders with FH slot bracket attached (mounts in a riser slot) • 1x vertical supercap holder (mounts on the outside of the riser) • 2x power extension cables	1

The following figure shows the two supercap holders that are included in the kit.

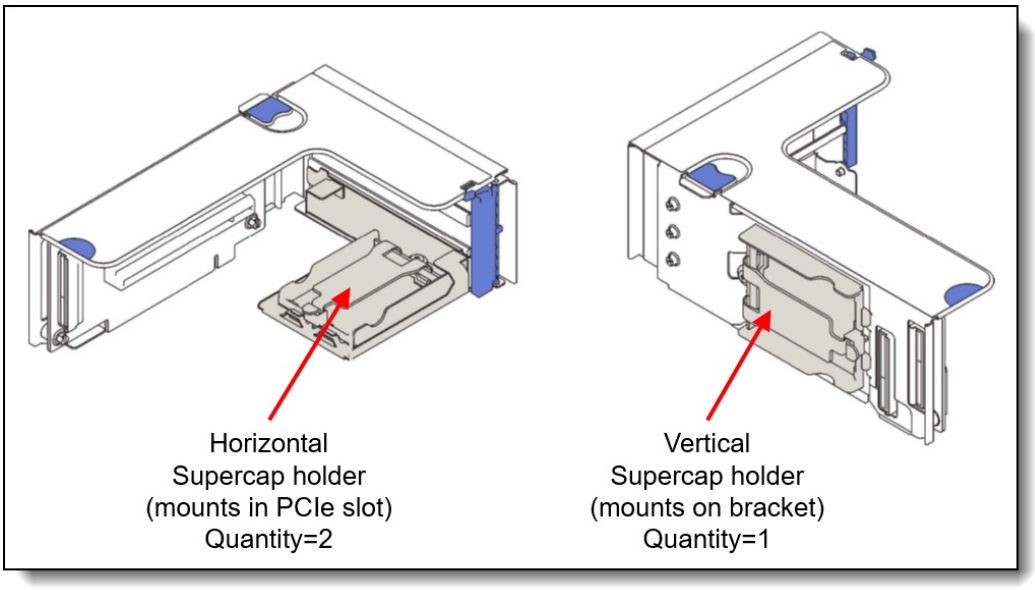

Figure 11. SR850 V2 supercap holders

7mm drives

The SR850 V2 supports two 7mm drives, either both SATA or both NVMe, at the rear of the server. These drives are installed in slot 3, as shown in the following figure.

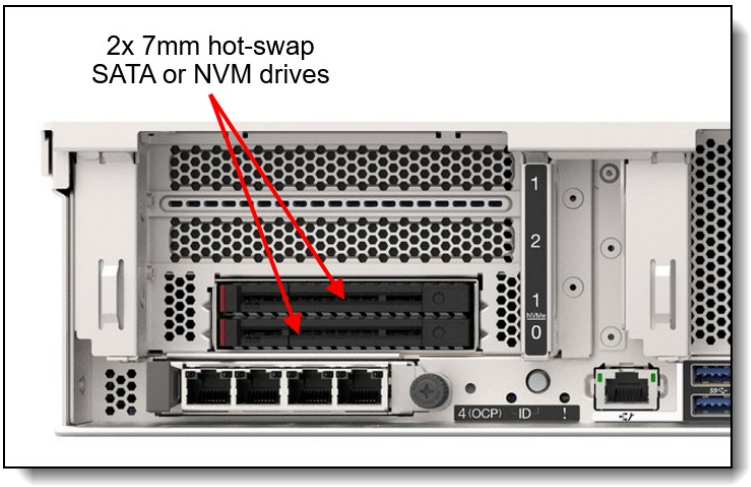

Figure 12. 7mm drive bays

Ordering information for the 7mm drive bays is in the following table. The 7mm drive kits require the Riser 1 configuration with two slots, feature BAW6 or option 4C57A15017.

Table 19. 7mm rear drive bays

Part number	Feature code	Description
7mm drive kits		
4C57A15020	B8P2	ThinkSystem SR850 V2 Rear 7mm SATA SSD RAID Enablement Kit
4C57A15021	B8P3	ThinkSystem SR850 V2 Rear 7mm NVMe SSD RAID Enablement Kit
Riser 1 with 7mm drive support		
CTO only*	BAW6	ThinkSystem SR850/SR860 V2 x8/x8 PCIe FH Riser 1
4C57A15017	Upgrades only*	ThinkSystem SR850 V2 x8/x8 PCIe FH Riser 1 with 7mm Enablement Kit

* For CTO orders, select feature code BAW6 for Riser 1 with support for 7mm drives. For field upgrades, order 4C57A15017.

Configuration notes for 7mm drive support:

- The 7mm drives are located in place of slot 3 in Riser 1. As a result, the only riser supported is the 2-slot riser which has PCIe x8 (x16 physical) slots for slots 1 and 2.
- Riser 2 is not supported when a 7mm drive kit is selected, due to physical constraints related to cabling

Each drive enclosure includes an integrated controller providing RAID functions.

The 7mm SATA RAID Drive Kit has the following features:

- Supports 1 or 2 SATA hot-swap drives; drives are 7mm high and 2.5-inches wide
- Integrated controller based on the Marvell 88SE9230 SATA RAID Controller
- PCIe 2.0 x2 host interface to the server system board
- Provides 6 Gbps SATA connectivity to the drives
- Supports JBOD, RAID-0 and RAID-1
- Management and configuration support via UEFI and OS-based tools
- Supports monitoring and reporting of events and temperature through I2C
- Firmware update via Lenovo firmware update tools

The 7mm NVMe RAID Drive Kit has the following features:

- Supports 1 or 2 NVMe hot-swap drives; drives are 7mm high and 2.5-inches wide
- Integrated controller based on the Marvell 88NR2241 NVMe RAID Controller
- PCIe 3.0 x2 host interface to the server system board
- Provides PCIe 3.0 x1 connectivity to each drive
- With 1 drive, supports single-drive RAID-0
- With 2 drives, supports 2-drive RAID-0, 2-drive RAID-1, or two single-drive RAID-0 arrays
- Management and configuration support via UEFI and OS-based tools
- Supports monitoring and reporting of events and temperature through I2C
- Firmware update via Lenovo firmware update tools

SED encryption key management with ISKLM

The server supports self-encrypting drives (SEDs) as listed in the Internal drive options section. To effectively manage a large deployment of these drives in Lenovo servers, IBM Security Key Lifecycle Manager (SKLM) offers a centralized key management solution. A Lenovo Feature on Demand (FoD) upgrade is used to enable this SKLM support in the management processor of the server.

The following table lists the part numbers and feature codes for the upgrades.

Table 20. FoD upgrades for SKLM support

Part number	Feature code	Description
Security Key Lifecycle Manager - FoD (United States, Canada, Asia Pacific, and Japan)		
00D9998	A5U1	SKLM for System x/ThinkSystem w/SEDs - FoD per Install with 1 year S&S
00D9999	AS6C	SKLM for System x/ThinkSystem w/SEDs - FoD per Install with 3 year S&S
Security Key Lifecycle Manager - FoD (Latin America, Europe, Middle East, and Africa)		
00FP648	A5U1	SKLM for System x/ThinkSystem w/SEDs - FoD per Install with 1 year S&S
00FP649	AS6C	SKLM for System x/ThinkSystem w/SEDs - FoD per Install with 3 year S&S

The IBM Security Key Lifecycle Manager software is available from Lenovo using the ordering information listed in the following table.

Table 21. IBM Security Key Lifecycle Manager licenses

Part number	Description
7S0A007FWW	IBM Security Key Lifecycle Manager Basic Edition Install License + SW Subscription & Support 12 Months
7S0A007HWW	IBM Security Key Lifecycle Manager For Raw Decimal Terabyte Storage Resource Value Unit License + SW Subscription & Support 12 Months
7S0A007KWW	IBM Security Key Lifecycle Manager For Raw Decimal Petabyte Storage Resource Value Unit License + SW Subscription & Support 12 Months
7S0A007MWW	IBM Security Key Lifecycle Manager For Usable Decimal Terabyte Storage Resource Value Unit License + SW Subscription & Support 12 Months
7S0A007PWW	IBM Security Key Lifecycle Manager For Usable Decimal Petabyte Storage Resource Value Unit License + SW Subscription & Support 12 Months

Controllers for internal storage

The SR850 V2 supports offers a variety of controller options for internal drives:

- For 2.5-inch drives:
  - Onboard SATA ports with software RAID support (Intel VROC SATA RAID, formerly known as Intel RSTe)
  - Onboard NVMe ports with software RAID support (Intel VROC NVMe RAID)
  - RAID adapters and HBAs for SAS/SATA drives
- For 7mm drive bays in the rear of the server (see the 7mm drives section)
  - SATA controller integrated into the 7mm drive bay enclosure
  - NVMe controller integrated into the 7mm drive bay enclosure

The onboard SATA controller has the following features:

- Controller integrated into the Intel processor
- Supports up to 8 SATA drives
- 6 Gbps SATA host interface
- Supports RAID-0, 1, 5, 10 (Intel VROC SATA RAID, previously known as RSTe)
- Supports JBOD
- Supports HDDs and SSDs; can be mixed

The onboard NVMe support has the following features:

- Controller integrated into the Intel processor
- Supports up to 16 NVMe drives
- Each drive has PCIe 3.0 x4 host interface
- Supports JBOD - Intel and non-Intel NVMe SSDs - no license required
- Supports RAID-0, 1, 5, 10 (Intel VROC NVMe RAID) - Intel NVMe SSDs only unless VROC Premium license is installed
- VROC Premium also extends to any drives connected via an NVMe Switch Adapter

The following table lists the controllers and adapters used for the internal 2.5-inch drive bays of the SR850 V2 server.

Table 22. Controllers for internal storage

Part number	Feature code	Description	Power module (supercap)	Maximum supported	Slots supported
Onboard SATA - 8 drives - Intel VROC SATA RAID (Intel RSTe)					
None	AVV0	On Board SATA Software RAID Mode	No	1	Not applicable
Onboard NVMe - 16 drives - Intel VROC NVMe RAID					
None	B9X7	Intel VROC (VMD NVMe RAID) Intel SSD Only (Standard)	No	1	Not applicable
4L47A39164	B96G	Intel VROC (VMD NVMe RAID) Premium (FoD upgrade)	No	1	Not applicable
SAS/SATA RAID adapters - PCIe 3.0 - 8-port					
7Y37A01082	AUNG	ThinkSystem RAID 530-8i PCIe 12Gb Adapter	No	3	1, 7, 8
4Y37A72482	BJHK	ThinkSystem RAID 5350-8i PCIe 12Gb Adapter	No	3	1, 7, 8
7Y37A01084	AUNJ	ThinkSystem RAID 930-8i 2GB Flash PCIe 12Gb Adapter	Included	1	1, 7, 8
4Y37A72483	BJHL	ThinkSystem RAID 9350-8i 2GB Flash PCIe 12Gb Adapter	Included	1	1, 7, 8
SAS/SATA RAID adapters - PCIe 3.0 - 16-port					
4Y37A09727	BFY5	ThinkSystem RAID 530-16i PCIe 12Gb Adapter	No	1	1, 7, 8
4Y37A72485	BJHN	ThinkSystem RAID 9350-16i 4GB Flash PCIe 12Gb Adapter	Included	1	1, 7, 8
SAS/SATA RAID adapters - PCIe 4.0 - 8-port					
4Y37A78834	BMFT	ThinkSystem RAID 540-8i PCIe Gen4 12Gb Adapter	No	3	1, 7, 8
4Y37A09728	B8NY	ThinkSystem RAID 940-8i 4GB Flash PCIe Gen4 12Gb Adapter	Included	1	1, 7, 8

Part number	Feature code	Description	Power module (supercap)	Maximum supported	Slots supported
CTO only	BGM1	ThinkSystem RAID 940-8i 4GB Flash PCIe Gen4 12Gb Adapter for U.3	Included	1	1, 7, 8
4Y37A09729	B8NW	ThinkSystem RAID 940-8i 8GB Flash PCIe Gen4 12Gb Adapter	Included	1	1, 7, 8
CTO only	BGM0	ThinkSystem RAID 940-8i 8GB Flash PCIe Gen4 12Gb Adapter for U.3	Included	1	1, 7, 8
SAS/SATA RAID adapters - PCIe 4.0 - 16-port and 32-port					
4Y37A78835	BNAX	ThinkSystem RAID 540-16i PCIe Gen4 12Gb Adapter	No	1	1, 7, 8
7Y37A01085	AUNK	ThinkSystem RAID 930-16i 4GB Flash PCIe 12Gb Adapter	Included	1	1, 7, 8
4Y37A78600	BM35	ThinkSystem RAID 940-16i 4GB Flash PCIe Gen4 12Gb Adapter	Included	1	1, 7, 8
4Y37A09730	B8NZ	ThinkSystem RAID 940-16i 8GB Flash PCIe Gen4 12Gb Adapter	Included	1	1, 7, 8
CTO only	BDY4	ThinkSystem RAID 940-16i 8GB Flash PCIe Gen4 12Gb Adapter for U.3	Included	1	1, 7, 8
4Y37A09733	B8P8	ThinkSystem RAID 940-32i 8GB Flash PCIe Gen4 12Gb Adapter	Included	1	1
SAS/SATA HBAs for internal storage - PCIe 3.0					
7Y37A01088	AUNL	ThinkSystem 430-8i SAS/SATA 12Gb HBA	No	3	1, 7, 8
4Y37A72480	BJHH	ThinkSystem 4350-8i SAS/SATA 12Gb HBA	No	3	1, 7, 8
7Y37A01089	AUNM	ThinkSystem 430-16i SAS/SATA 12Gb HBA	No	1	1, 7, 8
4Y37A72481	BJHJ	ThinkSystem 4350-16i SAS/SATA 12Gb HBA	No	1	1, 7, 8
SAS/SATA HBAs for internal storage - PCIe 4.0					
4Y37A78601	BM51	ThinkSystem 440-8i SAS/SATA PCIe Gen4 12Gb HBA	No	3	1, 7, 8
4Y37A78602	BM50	ThinkSystem 440-16i SAS/SATA PCIe Gen4 12Gb HBA	No	1	1, 7, 8
NVMe controllers for internal storage					
4C57A65446	B98C	ThinkSystem 4-Port PCIe Gen4 NVMe Retimer Adapter	No	2	5, 6
CTO only	B4PA	ThinkSystem 1610-8P NVMe Switch Adapter	No	2	5, 6

For specifications of the RAID adapters and HBAs supported by the SR850 V2, see the ThinkSystem RAID Adapter and HBA Comparison, available from: https://lenovopress.com/lp1288-lenovo-thinksystem-raid-adapter-and-hba-reference#sr850-v2-support=SR850%2520V2

For details about these adapters, see the relevant product guide:

- SAS HBAs: https://lenovopress.com/servers/options/hba
- RAID adapters: https://lenovopress.com/servers/options/raid

Configuration notes:

- **Supercap support limits the number of RAID adapters installable** : As indicated in the table, the RAID 930 and RAID 940 adapters include and require a power module (supercap) to power the flash memory. The server supports up to 2 supercaps, installed in a dedicated holder adjacent to the top riser slots as shown in Figure 6. The number of supercaps supported also determines the maximum number of internal + external RAID 930/940 adapters that can be installed in the server. See RAID flash power module (supercap) support for field upgrade information.
- **Supercap support with PMem**: If either of the following two riser cards is configured in addition to any Intel Optane Persistent Memory (PMem) modules installed, then at most 1 supercap (and one RAID 930 or RAID 940) adapter can be installed, due to thermal restrictions.
  - Riser 1 (x8/x8) with 7mm drives (feature code BAW6)
  - Riser 2 (feature code BCPF)
- **Field upgrades**: The RAID 930 and RAID 940 adapter part numbers include both the supercap and the supercap cable.
- **7mm drive support**: The storage adapters listed in the table below do *not* provide connectivity to the 7mm drive bays that are optionally available at the rear of the server. The 7mm drives have their own independent RAID controller. See the 7mm drives section for details.
- **E810 Ethernet and X350 RAID/HBAs**: The use of both an Intel E810 network adapter and an X350 HBA/RAID adapter (9350, 5350 and 4350) is currently not supported in ThinkSystem servers. For details see Support Tip HT513226. Planned support for this combination of adapters is 4Q/2023 (SI 23-2).

The RAID 940-8i and RAID 940-16i adapters also support NVMe through a feature named Tri-Mode support (or Trimode support). This feature enables the use of NVMe U.3 drives at the same time as SAS and SATA drives. Cabling of the controller to the backplanes is the same as with SAS/SATA drives, and the NVMe drives are connected via a PCIe x1 link to the controller.

NVMe drives connected using Tri-Mode support provide better performance than SAS or SATA drives: A SATA SSD has a data rate of 6Gbps, a SAS SSD has a data rate of 12Gbps, whereas an NVMe U.3 Gen 4 SSD with a PCIe x1 link will have a data rate of 16Gbps. NVMe drives typically also have lower latency and higher IOPS compared to SAS and SATA drives. Tri-Mode is supported with U.3 NVMe drives in either 2.5-inch and 3.5-inch form factor and requires an AnyBay backplane.

Tri-Mode requires U.3 drives: Only NVMe drives with a U.3 interface are supported. U.2 drives are not supported. See the Internal drive options section for the U.3 drives supported by the server.

Intel VROC onboard RAID

Intel VROC (Virtual RAID on CPU) is a feature of the Intel processor that enables RAID support.

There are two separate functions of VROC in the SR850 V2:

- Intel VROC SATA RAID, formerly known as Intel RSTe
- Intel VROC NVMe RAID

VROC SATA RAID (RSTe) is available and supported with all SATA drives, both SATA SSDs and SATA HDDs. It offers a 6 Gb/s connection to each drive and on the SR850 V2 implements RAID levels 0, 1, 5, and 10. RAID 1 is limited to 2 drives per array, and RAID 10 is limited to 4 drives per array. Hot-spare functionality is also supported.

VROC NVMe RAID offers RAID support for any NVMe drives directly connected to the ports on the server's system board or via adapters such as NVMe retimers or NVMe switch adapters. On the SR850 V2, it implements RAID levels 0, 1, 10, 5. RAID 1 is limited to 2 drives per array, and RAID 10 is limited to 4 drives per array. Hot-spare functionality is also supported.

Performance tip: For best performance with VROC NVMe RAID, the drives in an array should all be connected to the same processor. Spanning processors is possible however performance will be unpredictable and should be evaluated based on your workload.

The SR850 V2 supports the VROC NVMe RAID offerings listed in the following table. The VROC Intel SSD Only offering only supports RAID on Intel branded NVMe SSDs; non-Intel branded NVMe SSDs cannot be configured in a RAID array.

Tip: These feature codes and part numbers are only for VROC RAID using NVMe drives, not SATA drives

Table 23. VROC subsection

Part number	Feature code	Description	Intel SSDs	Non-Intel SSDs	RAID 0	RAID 1	RAID 10	RAID 5
CTO only	B9X7	Intel VROC (VMD NVMe RAID) Intel SSD Only	Yes	No	Yes	Yes	Yes	Yes
4L47A39164	B96G	Intel VROC (VMD NVMe RAID) Premium	Yes	Yes	Yes	Yes	Yes	Yes

The part number(s) listed in the table enables field upgrades. These are fulfilled as a Feature on Demand (FoD) license and is activated via the XCC management processor user interface.

Virtualization support: Virtualization support for Intel VROC is as follows:

- **VROC SATA RAID (RSTe)**: VROC SATA RAID is not supported by virtualization hypervisors such as ESXi, KVM, Xen, and Hyper-V. Virtualization is only supported on the onboard SATA ports in AHCI (non-RAID) mode.
- **VROC (VMD) NVMe RAID**: VROC (VMD) NVMe RAID is supported by ESXi, KVM, Xen, and Hyper-V. ESXi support is limited to RAID 1 only; other RAID levels are not supported. Windows and Linux OSes support VROC RAID NVMe, both for host boot functions and for guest OS function, and RAID-0, 1, 5, and 10 are supported.

Internal drive options

The following tables list the drive options for internal storage of the server.

2.5-inch hot-swap drives:

- 2.5-inch hot-swap 12 Gb SAS HDDs
- 2.5-inch hot-swap 6 Gb SATA HDDs
- 2.5-inch hot-swap 24 Gb SAS SSDs
- 2.5-inch hot-swap 12 Gb SAS SSDs
- 2.5-inch hot-swap 6 Gb SATA SSDs
- 2.5-inch hot-swap PCIe 4.0 NVMe SSDs
- 2.5-inch hot-swap PCIe 3.0 NVMe SSDs

2.5-inch 7mm hot-swap drives:

- 7mm 2.5-inch hot-swap 6 Gb SATA SSDs
- 7mm 2.5-inch hot-swap PCIe 4.0 NVMe SSDs

SED support: The tables include a column to indicate which drives support SED encryption. The encryption functionality can be disabled if needed. Note: Not all SED-enabled drives have "SED" in the description.

Table 24. 2.5-inch hot-swap 12 Gb SAS HDDs

Part number	Feature code	Description	SED support	Max Qty
2.5-inch hot-swap HDDs - 12 Gb SAS 15K				
7XB7A00021	AULV	ThinkSystem 2.5" 300GB 15K SAS 12Gb Hot Swap 512n HDD	No	24
7XB7A00022	AULW	ThinkSystem 2.5" 600GB 15K SAS 12Gb Hot Swap 512n HDD	No	24
7XB7A00023	AULX	ThinkSystem 2.5" 900GB 15K SAS 12Gb Hot Swap 512e HDD	No	24
2.5-inch hot-swap HDDs - 12 Gb SAS 10K				
7XB7A00024	AULY	ThinkSystem 2.5" 300GB 10K SAS 12Gb Hot Swap 512n HDD	No	24
7XB7A00025	AULZ	ThinkSystem 2.5" 600GB 10K SAS 12Gb Hot Swap 512n HDD	No	24
7XB7A00027	AUM1	ThinkSystem 2.5" 1.2TB 10K SAS 12Gb Hot Swap 512n HDD	No	24
7XB7A00028	AUM2	ThinkSystem 2.5" 1.8TB 10K SAS 12Gb Hot Swap 512e HDD	No	24
7XB7A00069	B0YS	ThinkSystem 2.5" 2.4TB 10K SAS 12Gb Hot Swap 512e HDD	No	24
4XB7A83970	BRG7	ThinkSystem 2.5" 2.4TB 10K SAS 12Gb Hot Swap 512e HDD v2	No	24
2.5-inch hot-swap HDDs - 12 Gb NL SAS				
7XB7A00034	AUM6	ThinkSystem 2.5" 1TB 7.2K SAS 12Gb Hot Swap 512n HDD	No	24
7XB7A00035	AUM7	ThinkSystem 2.5" 2TB 7.2K SAS 12Gb Hot Swap 512n HDD	No	24
2.5-inch hot-swap SED HDDs - 12 Gb SAS 10K				
7XB7A00031	AUM5	ThinkSystem 2.5" 600GB 10K SAS 12Gb Hot Swap 512n HDD SED	Support	24
7XB7A00033	B0YX	ThinkSystem 2.5" 1.2TB 10K SAS 12Gb Hot Swap 512n HDD SED	Support	24
7XB7A00070	B0YV	ThinkSystem 2.5" 2.4TB 10K SAS 12Gb Hot Swap 512e HDD FIPS	Support	24
4XB7A84038	BRG8	ThinkSystem 2.5" 2.4TB 10K SAS 12Gb Hot Swap 512e HDD FIPS v2	Support	24

Table 25. 2.5-inch hot-swap 6 Gb SATA HDDs

Part number	Feature code	Description	SED support	Max Qty
2.5-inch hot-swap HDDs - 6 Gb NL SATA				
7XB7A00036	AUUE	ThinkSystem 2.5" 1TB 7.2K SATA 6Gb Hot Swap 512n HDD	No	24
7XB7A00037	AUUJ	ThinkSystem 2.5" 2TB 7.2K SATA 6Gb Hot Swap 512e HDD	No	24

Table 26. 2.5-inch hot-swap 24 Gb SAS SSDs

Part number	Feature code	Description	SED support	Max Qty
2.5-inch hot-swap SSDs - 24 Gb SAS - Mixed Use/Mainstream (3-5 DWPD)				
4XB7A80340	BNW8	ThinkSystem 2.5" PM1655 800GB Mixed Use SAS 24Gb HS SSD	Support	24
4XB7A80341	BNW9	ThinkSystem 2.5" PM1655 1.6TB Mixed Use SAS 24Gb HS SSD	Support	24
4XB7A80342	BNW6	ThinkSystem 2.5" PM1655 3.2TB Mixed Use SAS 24Gb HS SSD	Support	24
4XB7A80343	BP3K	ThinkSystem 2.5" PM1655 6.4TB Mixed Use SAS 24Gb HS SSD	Support	24
2.5-inch hot-swap SSDs - 24 Gb SAS - Read Intensive/Entry/Capacity (<3 DWPD)				
4XB7A80318	BNWC	ThinkSystem 2.5" PM1653 960GB Read Intensive SAS 24Gb HS SSD	Support	24
4XB7A80319	BNWE	ThinkSystem 2.5" PM1653 1.92TB Read Intensive SAS 24Gb HS SSD	Support	24
4XB7A80320	BNWF	ThinkSystem 2.5" PM1653 3.84TB Read Intensive SAS 24Gb HS SSD	Support	24
4XB7A80321	BP3E	ThinkSystem 2.5" PM1653 7.68TB Read Intensive SAS 24Gb HS SSD	Support	24
4XB7A80322	BP3J	ThinkSystem 2.5" PM1653 15.36TB Read Intensive SAS 24Gb HS SSD	Support	24
4XB7A80323	BP3D	ThinkSystem 2.5" PM1653 30.72TB Read Intensive SAS 24Gb HS SSD	Support	24

Table 27. 2.5-inch hot-swap 12 Gb SAS SSDs

Part number	Feature code	Description	SED support	Max Qty
2.5-inch hot-swap SSDs - 12 Gb SAS - Write Intensive/Performance (10+ DWPD)				
4XB7A83214	BR10	ThinkSystem 2.5" Nytro 3750 400GB Write Intensive SAS 12Gb HS SSD	Support	24
4XB7A83215	BR0Z	ThinkSystem 2.5" Nytro 3750 800GB Write Intensive SAS 12Gb HS SSD	Support	24
4XB7A83216	BR0Y	ThinkSystem 2.5" Nytro 3750 1.6TB Write Intensive SAS 12Gb HS SSD	Support	24
4XB7A83217	BR0X	ThinkSystem 2.5" Nytro 3750 3.2TB Write Intensive SAS 12Gb HS SSD	Support	24
4XB7A70003	BG04	ThinkSystem 2.5" Nytro 3732 3.2TB Performance SAS 12Gb Hot Swap SSD	No	24
2.5-inch hot-swap SSDs - 12 Gb SAS - Mixed Use/Mainstream (3-5 DWPD)				
4XB7A17064	B8JD	ThinkSystem 2.5" PM1645a 3.2TB Mainstream SAS 12Gb Hot Swap SSD	No	24
4XB7A17065	B8JA	ThinkSystem 2.5" PM1645a 6.4TB Mainstream SAS 12Gb Hot Swap SSD	No	24
2.5-inch hot-swap SSDs - 12 Gb SAS - Read Intensive/Entry/Capacity (<3 DWPD)				
4XB7A17055	B91D	ThinkSystem 2.5" PM1643a 7.68TB Entry SAS 12Gb Hot Swap SSD	No	24
4XB7A17056	BC4R	ThinkSystem 2.5" PM1643a 15.36TB Entry SAS 12Gb Hot Swap SSD	No	24

Table 28. 2.5-inch hot-swap 6 Gb SATA SSDs

Part number	Feature code	Description	SED support	Max Qty
2.5-inch hot-swap SSDs - 6 Gb SATA - Mixed Use/Mainstream (3-5 DWPD)				
4XB7A82289	BQ21	ThinkSystem 2.5" 5400 MAX 480GB Mixed Use SATA 6Gb HS SSD	Support	24
4XB7A82290	BQ24	ThinkSystem 2.5" 5400 MAX 960GB Mixed Use SATA 6Gb HS SSD	Support	24

Part number	Feature code	Description	SED support	Max Qty
4XB7A82291	BQ22	ThinkSystem 2.5" 5400 MAX 1.92TB Mixed Use SATA 6Gb HS SSD	Support	24
4XB7A82292	BQ23	ThinkSystem 2.5" 5400 MAX 3.84TB Mixed Use SATA 6Gb HS SSD	Support	24
4XB7A17125	BA7Q	ThinkSystem 2.5" S4620 480GB Mixed Use SATA 6Gb HS SSD	No	24
4XB7A17126	BA4T	ThinkSystem 2.5" S4620 960GB Mixed Use SATA 6Gb HS SSD	No	24
4XB7A17127	BA4U	ThinkSystem 2.5" S4620 1.92TB Mixed Use SATA 6Gb HS SSD	No	24
4XB7A17128	BK7L	ThinkSystem 2.5" S4620 3.84TB Mixed Use SATA 6Gb HS SSD	No	24
4XB7A17090	B8JE	ThinkSystem 2.5" 5300 1.92TB Mainstream SATA 6Gb Hot Swap SSD	No	24
4XB7A13637	B49Q	ThinkSystem 2.5" S4610 3.84TB Mixed Use SATA 6Gb HS SSD	No	24
2.5-inch hot-swap SSDs - 6 Gb SATA - Read Intensive/Entry (<3 DWPD)				
4XB7A89423	BXDY	ThinkSystem 2.5" CM893a 1.92TB Read Intensive SATA 6Gb HS SSD	Support	24
4XB7A87524	BWKN	ThinkSystem 2.5" PM893a 480GB Read Intensive SATA 6Gb HS SSD	Support	24
4XB7A87525	BWKM	ThinkSystem 2.5" PM893a 960GB Read Intensive SATA 6Gb HS SSD	Support	24
4XB7A87526	BWKL	ThinkSystem 2.5" PM893a 1.92TB Read Intensive SATA 6Gb HS SSD	Support	24
4XB7A87527	BWKK	ThinkSystem 2.5" PM893a 3.84TB Read Intensive SATA 6Gb HS SSD	Support	24
4XB7A82258	BQ1Q	ThinkSystem 2.5" 5400 PRO 240GB Read Intensive SATA 6Gb HS SSD	Support	24
4XB7A82259	BQ1P	ThinkSystem 2.5" 5400 PRO 480GB Read Intensive SATA 6Gb HS SSD	Support	24
4XB7A82260	BQ1R	ThinkSystem 2.5" 5400 PRO 960GB Read Intensive SATA 6Gb HS SSD	Support	24
4XB7A82261	BQ1X	ThinkSystem 2.5" 5400 PRO 1.92TB Read Intensive SATA 6Gb HS SSD	Support	24
4XB7A82262	BQ1S	ThinkSystem 2.5" 5400 PRO 3.84TB Read Intensive SATA 6Gb HS SSD	Support	24
4XB7A82263	BQ1T	ThinkSystem 2.5" 5400 PRO 7.68TB Read Intensive SATA 6Gb HS SSD	Support	24
4XB7A72438	BM8B	ThinkSystem 2.5" PM893 480GB Read Intensive SATA 6Gb HS SSD	No	24
4XB7A72439	BM8A	ThinkSystem 2.5" PM893 960GB Read Intensive SATA 6Gb HS SSD	No	24
4XB7A72440	BM89	ThinkSystem 2.5" PM893 1.92TB Read Intensive SATA 6Gb HS SSD	No	24
4XB7A72441	BM88	ThinkSystem 2.5" PM893 3.84TB Read Intensive SATA 6Gb HS SSD	No	24
4XB7A72442	BM87	ThinkSystem 2.5" PM893 7.68TB Read Intensive SATA 6Gb HS SSD	No	24
4XB7A17072	B99D	ThinkSystem 2.5" S4520 240GB Read Intensive SATA 6Gb HS SSD	No	24
4XB7A17101	BA7G	ThinkSystem 2.5" S4520 480GB Read Intensive SATA 6Gb HS SSD	No	24
4XB7A17102	BA7H	ThinkSystem 2.5" S4520 960GB Read Intensive SATA 6Gb HS SSD	No	24
4XB7A17103	BA7J	ThinkSystem 2.5" S4520 1.92TB Read Intensive SATA 6Gb HS SSD	No	24
4XB7A17104	BK77	ThinkSystem 2.5" S4520 3.84TB Read Intensive SATA 6Gb HS SSD	No	24
4XB7A17105	BK78	ThinkSystem 2.5" S4520 7.68TB Read Intensive SATA 6Gb HS SSD	No	24
4XB7A38273	BCTE	ThinkSystem 2.5" Multi Vendor 960GB Entry SATA 6Gb Hot Swap SSD	No	24
4XB7A38274	BCTF	ThinkSystem 2.5" Multi Vendor 1.92TB Entry SATA 6Gb Hot Swap SSD	No	24
4XB7A38275	BCTG	ThinkSystem 2.5" Multi Vendor 3.84TB Entry SATA 6Gb Hot Swap SSD	No	24
4XB7A17079	B8JP	ThinkSystem 2.5" 5300 3.84TB Entry SATA 6Gb Hot Swap SSD	No	24
4XB7A17080	B8J2	ThinkSystem 2.5" 5300 7.68TB Entry SATA 6Gb Hot Swap SSD	No	24

Table 29. 2.5-inch hot-swap PCIe 4.0 NVMe SSDs

Part number	Feature code	Description	SED support	Max Qty
2.5-inch SSDs - U.2 PCIe 4.0 NVMe - Write Intensive/Performance (10+ DWPD)				
4XB7A17158	BKKY	ThinkSystem 2.5" U.2 P5800X 400GB Write Intensive NVMe PCIe 4.0 x4 HS SSD	No	24
4XB7A17159	BKKZ	ThinkSystem 2.5" U.2 P5800X 800GB Write Intensive NVMe PCIe 4.0 x4 HS SSD	No	24
4XB7A17160	BMM8	ThinkSystem 2.5" U.2 P5800X 1.6TB Write Intensive NVMe PCIe 4.0 x4 HS SSD	No	24
2.5-inch SSDs - U.2 PCIe 4.0 NVMe - Mixed Use/Mainstream (3-5 DWPD)				
4XB7A17129	BNEG	ThinkSystem 2.5" U.2 P5620 1.6TB Mixed Use NVMe PCIe 4.0 x4 HS SSD	Support	24
4XB7A17130	BNEH	ThinkSystem 2.5" U.2 P5620 3.2TB Mixed Use NVMe PCIe 4.0 x4 HS SSD	Support	24
4XB7A17133	BNEZ	ThinkSystem 2.5" U.2 P5620 6.4TB Mixed Use NVMe PCIe 4.0 x4 HS SSD	Support	24
4XB7A17136	BA4V	ThinkSystem 2.5" U.2 P5620 12.8TB Mixed Use NVMe PCIe 4.0 x4 HS SSD	Support	24
2.5-inch SSDs - U.3 PCIe 4.0 NVMe - Mixed Use/Mainstream (3-5 DWPD)				
4XB7A79639	BNF1	ThinkSystem 2.5" U.3 7450 MAX 800GB Mixed Use NVMe PCIe 4.0 x4 HS SSD	Support	24
4XB7A13967	BNEJ	ThinkSystem 2.5" U.3 7450 MAX 1.6TB Mixed Use NVMe PCIe 4.0 x4 HS SSD	Support	24
4XB7A13970	BNEY	ThinkSystem 2.5" U.3 7450 MAX 3.2TB Mixed Use NVMe PCIe 4.0 x4 HS SSD	Support	24
4XB7A13971	BNEL	ThinkSystem 2.5" U.3 7450 MAX 6.4TB Mixed Use NVMe PCIe 4.0 x4 HS SSD	Support	24
4XB7A84056	BRG0	ThinkSystem 2.5" U.3 7450 MAX 12.8TB Mixed Use NVMe PCIe 4.0 x4 HS SSD	Support	24
4XB7A17112	B96Z	ThinkSystem U.3 Kioxia CM6-V 1.6TB Mainstream NVMe PCIe4.0 x4 Hot Swap SSD	No	24
2.5-inch SSDs - U.2 PCIe 4.0 NVMe - Read Intensive/Entry (<3 DWPD)				
4XB7A90099	BXMB	ThinkSystem 2.5" U.2 PM9A3 960GB Read Intensive NVMe PCIe 4.0 x4 HS SSD	Support	24
4XB7A90100	BXMA	ThinkSystem 2.5" U.2 PM9A3 1.92TB Read Intensive NVMe PCIe 4.0 x4 HS SSD	Support	24
4XB7A90101	BXM9	ThinkSystem 2.5" U.2 PM9A3 3.84TB Read Intensive NVMe PCIe 4.0 x4 HS SSD	Support	24
4XB7A13941	BMGD	ThinkSystem 2.5" U.2 P5520 1.92TB Read Intensive NVMe PCIe 4.0 x4 HS SSD	Support	24
4XB7A13942	BMGE	ThinkSystem 2.5" U.2 P5520 3.84TB Read Intensive NVMe PCIe 4.0 x4 HS SSD	Support	24
4XB7A13943	BNEF	ThinkSystem 2.5" U.2 P5520 7.68TB Read Intensive NVMe PCIe 4.0 x4 HS SSD	Support	24
4XB7A13631	BNEQ	ThinkSystem 2.5" U.2 P5520 15.36TB Read Intensive NVMe PCIe 4.0 x4 HS SSD	Support	24

Part number	Feature code	Description	SED support	Max Qty
4XB7A17145	BCFT	ThinkSystem 2.5" U.2 P5500 1.92TB Read Intensive NVMe PCIe 4.0 x4 HS SSD	No	24
4XB7A17147	BCFU	ThinkSystem 2.5" U.2 P5500 7.68TB Read Intensive NVMe PCIe 4.0 x4 HS SSD	No	24
2.5-inch SSDs - U.3 PCIe 4.0 NVMe - Read Intensive/Entry (<3 DWPD)				
4XB7A81951	BPKX	ThinkSystem 2.5" U.3 PM1733a 1.92TB Read Intensive NVMe PCIe 4.0 x4 HS SSD	Support	24
4XB7A81952	BPKY	ThinkSystem 2.5" U.3 PM1733a 3.84TB Read Intensive NVMe PCIe 4.0 x4 HS SSD	Support	24
4XB7A81953	BPKZ	ThinkSystem 2.5" U.3 PM1733a 7.68TB Read Intensive NVMe PCIe 4.0 x4 HS SSD	Support	24
4XB7A81954	BPL0	ThinkSystem 2.5" U.3 PM1733a 15.36TB Read Intensive NVMe PCIe 4.0 x4 HS SSD	Support	24
4XB7A81999	BPL1	ThinkSystem 2.5" U.3 PM1733a 30.72TB Read Intensive NVMe PCIe 4.0 x4 HS SSD	Support	24
4XB7A79646	BNF3	ThinkSystem 2.5" U.3 7450 PRO 960GB Read Intensive NVMe PCIe 4.0 x4 HS SSD	Support	24
4XB7A79647	BNF2	ThinkSystem 2.5" U.3 7450 PRO 1.92TB Read Intensive NVMe PCIe 4.0 x4 HS SSD	Support	24
4XB7A79648	BNF5	ThinkSystem 2.5" U.3 7450 PRO 3.84TB Read Intensive NVMe PCIe 4.0 x4 HS SSD	Support	24
4XB7A79649	BNF4	ThinkSystem 2.5" U.3 7450 PRO 7.68TB Read Intensive NVMe PCIe 4.0 x4 HS SSD	Support	24
4XB7A83097	BQAV	ThinkSystem 2.5" U.3 7450 PRO 15.36TB Read Intensive NVMe PCIe 4.0 x4 HS SSD	Support	24

Table 30. 2.5-inch hot-swap PCIe 3.0 NVMe SSDs

Part number	Feature code	Description	SED support	Max Qty
2.5-inch SSDs - U.2 PCIe 3.0 NVMe - Write Intensive/Performance (10+ DWPD)				
4XB7A38159	B972	ThinkSystem 2.5" U.2 P4800X 375GB Write Intensive NVMe PCIe 3.0 x4 HS SSD 60DWPD	No	24
4XB7A38160	B973	ThinkSystem 2.5" U.2 P4800X 750GB Write Intensive NVMe PCIe 3.0 x4 HS SSD 60DWPD	No	24
4XB7A17163	B96L	ThinkSystem 2.5" U.2 P4800X 1.5TB Write Intensive NVMe PCIe 3.0 x4 HS SSD 60DWPD	No	24
2.5-inch SSDs - U.2 PCIe 3.0 NVMe - Read Intensive/Entry (<3 DWPD)				
4XB7A10205	B58H	ThinkSystem U.2 Intel P4510 4.0TB Entry NVMe PCIe3.0 x4 Hot Swap SSD	No	24
4XB7A10176	B34P	ThinkSystem U.2 PM983 3.84TB Entry NVMe PCIe 3.0 x4 Hot Swap SSD	No	24

Table 31. 7mm 2.5-inch hot-swap 6 Gb SATA SSDs

Part number	Feature code	Description	SED support	Max Qty
7mm 2.5-inch hot-swap SSDs - 6 Gb SATA - Read Intensive/Entry (<3 DWPD)				
4XB7A82264	BQ1U	ThinkSystem 7mm 5400 PRO 240GB Read Intensive SATA 6Gb HS SSD	Support	2
4XB7A82265	BQ1V	ThinkSystem 7mm 5400 PRO 480GB Read Intensive SATA 6Gb HS SSD	Support	2
4XB7A82266	BQ1W	ThinkSystem 7mm 5400 PRO 960GB Read Intensive SATA 6Gb HS SSD	Support	2
4XB7A82267	BR13	ThinkSystem 7mm 5400 PRO 1.92TB Read Intensive SATA 6Gb HS SSD	Support	2
4XB7A82268	BR12	ThinkSystem 7mm 5400 PRO 3.84TB Read Intensive SATA 6Gb HS SSD	Support	2
4XB7A82269	BR11	ThinkSystem 7mm 5400 PRO 7.68TB Read Intensive SATA 6Gb HS SSD	Support	2
4XB7A17106	BK79	ThinkSystem 7mm S4520 240GB Read Intensive SATA 6Gb HS SSD	No	2
4XB7A17107	BK7A	ThinkSystem 7mm S4520 480GB Read Intensive SATA 6Gb HS SSD	No	2
4XB7A17108	BK7B	ThinkSystem 7mm S4520 960GB Read Intensive SATA 6Gb HS SSD	No	2

Table 32. 7mm 2.5-inch hot-swap PCIe 4.0 NVMe SSDs

Part number	Feature code	Description	SED support	Max Qty
7mm 2.5-inch hot-swap SSDs - PCIe 4.0 NVMe - Read Intensive/Entry (<3 DWPD)				
4XB7A90096	BXMN	ThinkSystem 7mm U.2 PM9A3 960GB Read Intensive NVMe PCIe 4.0 x4 HS SSD	Support	2
4XB7A90097	BXMM	ThinkSystem 7mm U.2 PM9A3 1.92TB Read Intensive NVMe PCIe 4.0 x4 HS SSD	Support	2
4XB7A90098	BXML	ThinkSystem 7mm U.2 PM9A3 3.84TB Read Intensive NVMe PCIe 4.0 x4 HS SSD	Support	2
4XB7A82853	BPZ4	ThinkSystem 7mm U.3 7450 PRO 960GB Read Intensive NVMe PCIe 4.0 x4 HS SSD	Support	2
4XB7A82855	BPZ5	ThinkSystem 7mm U.3 7450 PRO 1.92TB Read Intensive NVMe PCIe 4.0 x4 HS SSD	Support	2
4XB7A82856	BPZ6	ThinkSystem 7mm U.3 7450 PRO 3.84TB Read Intensive NVMe PCIe 4.0 x4 HS SSD	Support	2

Internal backup units

The server does not support any internal backup units.

Optical drives

The server does not support an internal optical drive.

An external USB optical drive is available, listed in the following table.

Table 34. External optical drive

Part number	Feature code	Description
7XA7A05926	AVV8	ThinkSystem External USB DVD RW Optical Disk Drive

I/O expansion options

The server supports up to 7 PCIe 3.0 slots plus an OCP 3.0 slot for an Ethernet adapter. Two PCIe slots (slots 7 & 8) are on the system board; all others are on riser cards.

The following figure shows the locations of the PCIe slots, both without 7mm drives installed (top) and with 7mm drives installed (bottom).

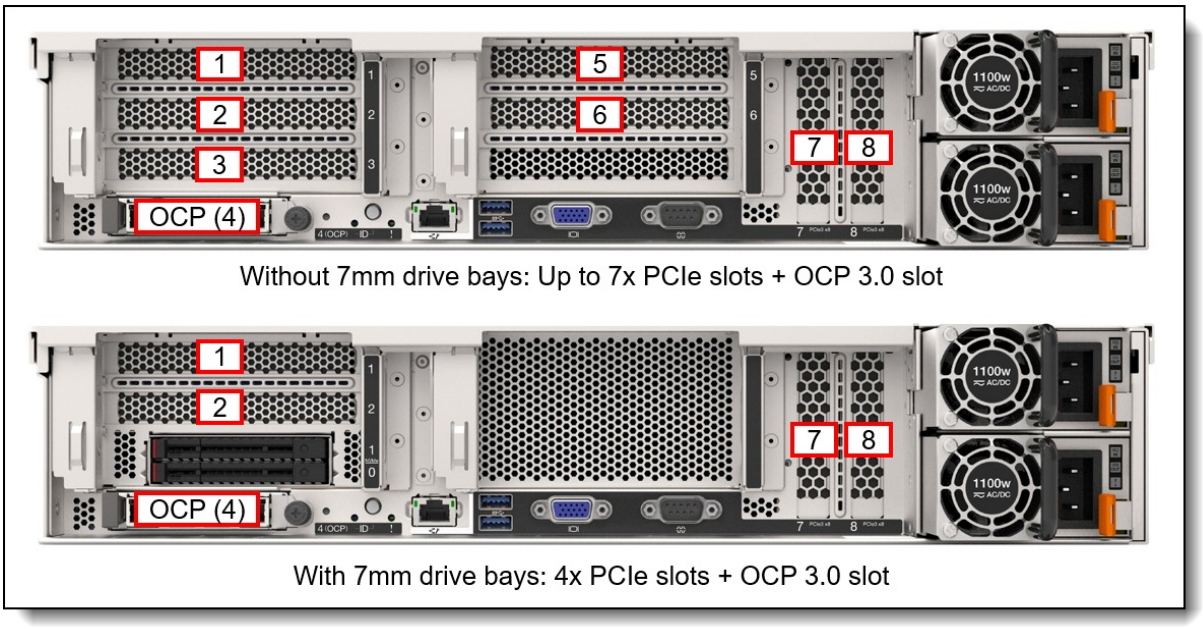

Figure 13. SR850 V2 slot numbering

The slots are as follows:

- Slot 1: PCIe x16 FHHL (CPU 2) or PCIe x8 FHHL with 2-slot riser (CPU 2)
- Slot 2: PCIe x16 FHHL (CPU 1) or PCIe x8 FHHL with 2-slot riser (CPU 2)
- Slot 3: PCIe x16 FHHL (not present if 2-slot riser is selected) (CPU 2)
- Slot 4: OCP 3.0 slot with PCIe x16 connection (CPU 2)
- Slot 5: PCIe x16 FHHL (CPU 4) (not supported with 7mm drives**)
- Slot 6: PCIe x16 FHHL (CPU 1) (not supported with 7mm drives**)
- Slot 7: PCIe x8 LP (CPU 1) (x8 physical connector)
- Slot 8: PCIe x8 LP (CPU 1) (x8 physical connector)

** If you select 7mm drives bays to be installed in the server, these drive bays occupy slot 3. However, the 7mm drives are also mutually exclusive with slots 5 and 6 due to physical constraints of cabling, so those slots are not available in such a configuration.

Slots are implemented using riser cards, as shown in the following figure.

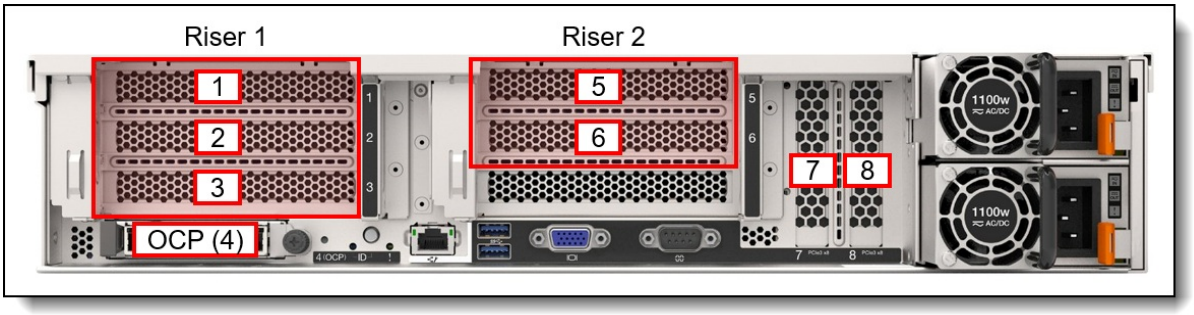

Figure 14. SR850 V2 riser card locations

Slots 1, 2, and 3 are implemented using a riser in the Riser 1 position (also known as Zone 1). There are two riser options available:

- A 3-slot riser (feature BAW7), where all slots are PCIe x16, however this riser is mutually exclusive with 8x NVMe drive connections. See the System architecture section for a graphical view of the connections.
  - Slot 1: PCIe x16 FHHL (CPU 2)
  - Slot 2: PCIe x16 FHHL (CPU 1)
  - Slot 3: PCIe x16 FHHL (CPU 2)
- A 2-slot riser (feature BAW6), where the slots are both PCIe x8 and which allow the use of the 8x NVMe drive connections. The two-slot riser is used when 7mm drives occupy slot 3.
  - Slot 1: PCIe x8 FHHL (CPU 2) (x16 physical connector)
  - Slot 2: PCIe x8 FHHL (CPU 2) (x16 physical connector)

Slots 5 and 6 are implemented using a riser in the Riser 2 position (known as Zone 2). Only one riser is available for Riser 2:

- A 2-slot riser (feature BCPF), where both slots are PCIe x16. This riser is not supported if 7mm drives are installed in slot 3, due to physical constraints of cabling the drives.
  - Slot 5: PCIe x16 FHHL (CPU 4)
  - Slot 6: PCIe x16 FHHL (CPU 1)

Riser 2 requires 4 CPUs: Slot 5 on Riser 2 connects to CPU 4, which means that 4 processors are required to user Riser 2 (feature BCPF).

The following table lists the ordering information and slot information for each the riser card options. The table also lists the part numbers for field upgrades to add riser cards for models that don't include them.

Table 35. PCI riser card options

Part number	Feature code	Description	Maximum supported
Riser 1			
4C57A15023	BAW6	ThinkSystem SR850 V2 x8/x8 PCIe FH Riser 1 Kit	1
4C57A15017	Upgrade only*	ThinkSystem SR850 V2 x8/x8 PCIe FH Riser 1 with 7mm Enablement Kit	1
4C57A15018	BAW7	ThinkSystem SR850 V2 x16/x16/x16 PCIe FH Riser 1 Kit	1
Riser 2 (four processors required)			
4C57A15019	BCPF	ThinkSystem SR850 V2 x16/x16 PCIe FH Riser 2 Kit	1

* For field upgrades only; order the 7mm drive bay separately. For CTO orders, use BAW6 for the riser plus the feature code for the 7mm drive. See the 7mm drives section for information.

Network adapters

The server has a dedicated OCP 3.0 SFF slot with PCIe 3.0 x16 host interface. See Figure 3 for the location of the OCP slot.

The following table lists the supported OCP adapters. One port can optionally be shared with the XCC management processor for Wake-on-LAN and NC-SI support. Only one OCP card can be installed in the server.

Table 36. OCP adapters

Part number	Feature code	Description	Maximum supported
Gigabit Ethernet			
4XC7A08235	B5T1	ThinkSystem Broadcom 5719 1GbE RJ45 4-port OCP Ethernet Adapter	1
4XC7A08277	B93E	ThinkSystem Intel I350 1GbE RJ45 4-port OCP Ethernet Adapter	1
Combination 1Gb and 10Gb Ethernet			
4XC7A08239	B5SS	ThinkSystem Broadcom 57416 10GBASE-T 2-port + 5720 1GbE 2-port OCP Ethernet Adapter	1
10Gb Ethernet			
4XC7A08236	B5ST	ThinkSystem Broadcom 57416 10GBASE-T 2-port OCP Ethernet Adapter	1
4XC7A08240	B5T4	ThinkSystem Broadcom 57454 10GBASE-T 4-port OCP Ethernet Adapter	1
4XC7A08278	BCD5	ThinkSystem Intel X710-T2L 10GBASE-T 2-port OCP Ethernet Adapter	1
4XC7A80268	BPPY	ThinkSystem Intel X710-T4L 10GBase-T 4-Port OCP Ethernet Adapter	1
25Gb Ethernet			
4XC7A08242	B5SV	ThinkSystem Broadcom 57454 10/25GbE SFP28 4-port OCP Ethernet Adapter	1
4XC7A80269	BP8L	ThinkSystem Intel E810-DA4 10/25GbE SFP28 4-Port OCP Ethernet Adapter	1
4XC7A08294	BCD4	ThinkSystem Intel E810-DA2 10/25GbE SFP28 2-Port OCP Ethernet Adapter	1
4XC7A62582	BE4T	ThinkSystem Mellanox ConnectX-6 Lx 10/25GbE SFP28 2-Port OCP Ethernet Adapter	1

The following table lists additional supported network adapters that can be installed in the regular PCIe slots.

Table 37. PCIe network adapters

Part number	Feature code	Description	Maximum supported	Slots supported
Gigabit Ethernet				
7ZT7A00484	AUZV	ThinkSystem Broadcom 5719 1GbE RJ45 4-Port PCIe Ethernet Adapter	7	Any slots
7ZT7A00482	AUZX	ThinkSystem Broadcom 5720 1GbE RJ45 2-Port PCIe Ethernet Adapter	7	Any slots
7ZT7A00534	AUZY	ThinkSystem I350-T2 PCIe 1Gb 2-Port RJ45 Ethernet Adapter	7	Any slots
7ZT7A00535	AUZW	ThinkSystem I350-T4 PCIe 1Gb 4-Port RJ45 Ethernet Adapter	7	Any slots
10Gb Ethernet - 10GBASE-T				

Part number	Feature code	Description	Maximum supported	Slots supported
7ZT7A00496	AUKP	ThinkSystem Broadcom 57416 10GBASE-T 2-Port PCIe Ethernet Adapter	7	Any slots
4XC7A08245	BFY6	ThinkSystem Broadcom 57454 10GBASE-T 4-port PCIe Ethernet Adapter	7	Any slots
00MM860	ATPX	Intel X550-T2 Dual Port 10GBase-T Adapter	7	Any slots
4XC7A80266	BNWL	ThinkSystem Intel X710-T2L 10GBase-T 2-Port PCIe Ethernet Adapter	7	Any slots
4XC7A79699	BMXB	ThinkSystem Intel X710-T4L 10GBase-T 4-Port PCIe Ethernet Adapter	7	Any slots
4XC7A08225	B31G	ThinkSystem QLogic QL41134 PCIe 10Gb 4-Port Base-T Ethernet Adapter	7	Any slots
10Gb Ethernet - SFP+				
7ZT7A00537	AUKX	ThinkSystem Intel X710-DA2 PCIe 10Gb 2-Port SFP+ Ethernet Adapter	7	Any slots
25Gb Ethernet				
4XC7A80267	BP8M	ThinkSystem Intel E810-DA4 10/25GbE SFP28 4-Port PCIe Ethernet Adapter	2	1,5
4XC7A08238	B5T0	ThinkSystem Broadcom 57414 10/25GbE SFP28 2-port PCIe Ethernet Adapter	7	Any slots
4XC7A08316	BD49	ThinkSystem Broadcom 57454 10/25GbE SFP28 4-port PCIe Ethernet Adapter V2	5	1,2,3,5,6
4XC7A08295	BCD6	ThinkSystem Intel E810-DA2 10/25GbE SFP28 2-Port PCIe Ethernet Adapter	7	Any slots
4XC7A62580	BE4U	ThinkSystem Mellanox ConnectX-6 Lx 10/25GbE SFP28 2-Port PCIe Ethernet Adapter	7	Any slots
100Gb Ethernet / HDR100 InfiniBand				
4XC7A08297	B96F	ThinkSystem Broadcom 57508 100GbE QSFP56 2-port PCIe 4 Ethernet Adapter	2	1,5
4XC7A08248	B8PP	ThinkSystem Mellanox ConnectX-6 Dx 100GbE QSFP56 2-port PCIe Ethernet Adapter	2	1,5
4C57A14177	B4R9	ThinkSystem Mellanox ConnectX-6 HDR100/100GbE QSFP56 1-port PCIe VPI Adapter	2	1,5
4C57A14178	B4RA	ThinkSystem Mellanox ConnectX-6 HDR100/100GbE QSFP56 2-port PCIe VPI Adapter	2	1,5
200Gb Ethernet / HDR InfiniBand				
4C57A15326	B4RC	ThinkSystem Mellanox ConnectX-6 HDR/200GbE QSFP56 1-port PCIe 4 VPI Adapter	2	1,5
4C57A14179	B4RB	ThinkSystem Mellanox HDR/200GbE 2x PCIe Aux Kit	2	2,6

For details about these adapters, see the relevant product guide:

- Ethernet adapters: https://lenovopress.com/servers/options/ethernet
- InfiniBand adapters: https://lenovopress.com/servers/options/infiniband

Fibre Channel host bus adapters

The following table lists the Fibre Channel HBAs supported by the server.

Table 38. Fibre Channel HBAs

Part number	Feature code	Description	Maximum supported	Slots supported
64Gb Fibre Channel				
4XC7A77485	BLC1	ThinkSystem Emulex LPe36002 64Gb 2-port PCIe Fibre Channel Adapter	7	Any slots
32Gb Fibre Channel				
4XC7A76525	BJ3H	ThinkSystem Emulex LPe35002 32Gb 2-port PCIe Fibre Channel Adapter V2	7	Any slots
4XC7A76498	BJ3G	ThinkSystem Emulex LPe35000 32Gb 1-port PCIe Fibre Channel Adapter V2	7	Any slots
4XC7A08250	B5SX	ThinkSystem Emulex LPe35000 32Gb 1-port PCIe Fibre Channel Adapter	7	Any slots
4XC7A08251	B5SY	ThinkSystem Emulex LPe35002 32Gb 2-port PCIe Fibre Channel Adapter	7	Any slots
4XC7A08279	BA1G	ThinkSystem QLogic QLE2770 32Gb 1-Port PCIe Fibre Channel Adapter	7	Any slots
4XC7A08276	BA1F	ThinkSystem QLogic QLE2772 32Gb 2-Port PCIe Fibre Channel Adapter	7	Any slots
16Gb Fibre Channel				
01CV830	ATZU	Emulex 16Gb Gen6 FC Single-port HBA	7	Any slots
01CV840	ATZV	Emulex 16Gb Gen6 FC Dual-port HBA	7	Any slots
01CV750	ATZB	QLogic 16Gb Enhanced Gen5 FC Single-port HBA	7	Any slots
01CV760	ATZC	QLogic 16Gb Enhanced Gen5 FC Dual-port HBA	7	Any slots

For more information, see the list of Lenovo Press Product Guides in the Host bus adapters category:
https://lenovopress.com/servers/options/hba

SAS adapters for external storage

The following table lists SAS HBAs and RAID adapters supported by the server for use with external storage.

Table 39. Adapters for external storage

Part number	Feature code	Description	Maximum supported	Slots supported
SAS HBAs				
7Y37A01090	AUNR	ThinkSystem 430-8e SAS/SATA 12Gb HBA	7	Any slots
7Y37A01091	AUNN	ThinkSystem 430-16e SAS/SATA 12Gb HBA	7	Any slots
4Y37A78837	BNWK	ThinkSystem 440-8e SAS/SATA PCIe Gen4 12Gb HBA	7	Any slots
4Y37A09724	B8P7	ThinkSystem 440-16e SAS/SATA PCIe Gen4 12Gb HBA	7	Any slots
External RAID adapters				
7Y37A01087	AUNQ	ThinkSystem RAID 930-8e 4GB Flash PCIe 12Gb Adapter	2	Any slots
4Y37A78836	BNWJ	ThinkSystem RAID 940-8e 4GB Flash PCIe Gen4 12Gb Adapter	2	Any slots

For a comparison of the functions of the supported external storage adapters, see the ThinkSystem RAID Adapter and HBA Reference:
https://lenovopress.com/lp1288#sr850-v2-support=SR850%20V2&internal-or-external-ports=External

Mixing storage adapter families: The following HBA/RAID adapter combinations are supported:

- X30 external adapters with other X30 adapters (internal or external)
- X40 external adapters with other X40 adapters (internal or external)
- X40 external adapters with X350 internal adapters

The following HBA/RAID adapter combinations are *not* supported:

- X30 adapters (internal or external) with X40 adapters (internal or external)
- X30 adapters (internal or external) with X350 internal adapters

The RAID 930-8e and 940-8e, like other RAID 930, 9350 and 940 adapters, use a flash power module (supercap) and the server supports 1 or 2 supercaps. The number of 930/940-8e RAID adapters supported is based on how many supercaps can be installed in the server. For example, if your configuration uses one RAID 930/940 adapters for internal storage, then you can only install one RAID 930/940-8e adapter, since there is only space for two supercaps total. See the RAID flash power module (supercap) support section for information.

For details about these adapters, see the relevant product guide:

- SAS HBAs: https://lenovopress.com/servers/options/hba
- RAID adapters: https://lenovopress.com/servers/options/raid

Flash storage adapters

All supported flash storage adapters are now withdrawn from marketing.

GPU adapters

The SR850 V2 supports the graphics processing units (GPUs) listed in the following table:

Table 40. GPU adapters

Part number	Feature code	Description	Maximum supported	Slots supported
4X67A81547	BP05	ThinkSystem NVIDIA A2 16GB PCIe Gen4 Passive GPU	2	1, 5
CTO only	BQZT	ThinkSystem NVIDIA A2 16GB PCIe Gen4 Passive GPU w/o CEC	2	1, 5
4X67A14926	B4YB	ThinkSystem NVIDIA T4 16GB PCIe Passive GPU	2	1, 5

For details about these GPUs, see the ThinkSystem and ThinkAgile GPU Summary:
https://lenovopress.com/lp0768-thinksystem-thinkagile-gpu-summary

Configuration rules:

- Some NVIDIA A Series GPUs are available as two feature codes, one with a CEC chip and one without a CEC chip (ones without the CEC chip have "w/o CEC" in the name). The CEC is a secondary Hardware Root of Trust (RoT) module that provides an additional layer of security, which can be used by customers who have high regulatory requirements or high security standards. NVIDIA uses a multi-layered security model and hence the protection offered by the primary Root of Trust embedded in the GPU is expected to be sufficient for most customers. The CEC defeatured products still offer Secure Boot, Secure Firmware Update, Firmware Rollback Protection, and In-Band Firmware Update Disable. Specifically, without the CEC chip, the GPU does not support Key Revocation or Firmware Attestation. CEC and non-CEC GPUs of the same type of GPU can be mixed in field upgrades.
- For processors with TDP ≤ 165W:
  - 4 processors supported
  - 48 memory DIMMs supported, up to 64GB RDIMMs
  - Ambient temperature up to 35 °C (ASHRAE A2)
- For processors with 165W < TDP ≤ 205W (except 8356H):
  - 4 processors supported
  - Up to 24 memory DIMMs supported, up to 64GB RDIMMs
  - Ambient temperature up to 35 °C (ASHRAE A2)
- For processors with TDP > 205W and Intel Xeon Platinum 8356H:
  - 4 processors supported
  - Up to 24 memory DIMMs supported, up to 64GB RDIMMs
  - Ambient temperature up to 30 °C without performance degradation (or up to 35 °C with performance degradation)
- The riser cards with PCIe x16 slots (feature BAW6 for Riser 1 and feature BCPF for Riser 2) must be installed
- Other slots in the riser cards must remain empty (slots 2, 3 and 6).
- The OCP 3.0 slot, and slots 7 and 8 are available for use.
- Network adapter can be in the OCP slot or slot 7 but not both.
- Up to 8 NVMe drives are supported using onboard NVMe connections
- Up to 16 SAS/SATA drives are supported with a RAID card installed in slot 8

Cooling

The SR850 V2 server has six 60 mm hot-swap dual-rotor variable-speed fans and all six fans are standard in all models. The server offers N+1 redundancy, meaning that one fan can fail and the server still operates normally.

In addition, each power supply has an integrated fan and a fan is connected to each of the two upper riser units.

Power supplies

The server supports up to two redundant hot-swap power supplies. Redundancy can be configured as N+1.

Tip: Use Lenovo Capacity Planner to determine exactly what power your server needs: https://datacentersupport.lenovo.com/us/en/products/solutions-and-software/software/lenovo-capacity-planner/solutions/ht504651

Table 41. Power supply options for SR850 V2

Part number	Feature	Description	Connector	Max qty	110V AC	220V AC	240V DC China only
Platinum power supplies							
4P57A75973	BHS8	ThinkSystem 750W (230V) v2 Titanium Hot-Swap Power Supply	C13	2	No	Yes	Yes
4P57A75974	BHS9	ThinkSystem 1100W (230V/115V) v2 Platinum Hot-Swap Power Supply	C13	2	Yes	Yes	Yes
4P57A26294	B8QB	ThinkSystem 1800W 230V Platinum Hot-Swap Gen2 Power Supply	C13	2	No	Yes	Yes
4P57A78362	BMUF	ThinkSystem 1800W 230V Platinum Hot-Swap Gen2 Power Supply v2	C13	2	No	Yes	Yes
4P57A26295	B962	ThinkSystem 2400W 230V Platinum Hot-Swap Gen2 Power Supply	C19	2	No	Yes	Yes
Titanium power supplies							
4P57A82019	BR1X	ThinkSystem 750W 230V Titanium Hot-Swap Gen2 Power Supply v3	C13	2	No	Yes	Yes
4P57A72666	BLKH	ThinkSystem 1100W 230V Titanium Hot-Swap Gen2 Power Supply	C13	2	No	Yes	Yes
4P57A78359	BPK9*	ThinkSystem 1800W 230V Titanium Hot-Swap Gen2 Power Supply	C13	2	No	Yes	Yes
4P57A72667	BKTJ	ThinkSystem 2600W 230V Titanium Hot-Swap Gen2 Power Supply	C19	2	No	Yes	Yes

* BPK9 is initially only configurable in PRC and certain countries in the EET and WE markets. Worldwide support is planned in 2Q/2023.

The 1100W Platinum power supply is auto-sensing and supports both 110V AC (100-127V 50/60 Hz) and 220V AC (200-240V 50/60 Hz) power. All other power supplies only support 220V AC power. For China customers, all power supplies support 240V DC.

Power supply options do not include a line cord. For server configurations, the inclusion of a power cord is model dependent. Configure-to-order models can be configured without a power cord if desired. Note that the 2400W power supply has a C19 connector.

Power supply LEDs

The supported hot-swap power supplies have the following LEDs:

- Power input LED:
  - Green: The power supply is connected to the AC power source
  - Off: The power supply is disconnected from the AC power source or a power problem has occurred
- Power output LED:
  - Green: The server is on and the power supply is working normally
  - Blinking green: The power supply is in Zero-output/Standby mode (see below)
  - Off: The server is powered off, or the power supply is not working properly
- Power supply error LED:
  - Off: The power supply is working normally
  - Yellow: The power supply has failed

Zero-output mode: When Zero-output mode (also known as Standby mode or Cold Redundancy mode) is configured in XCC and the server power load is sufficiently low, one of the installed power supplies enters into the Standby state while the other one delivers entire load. When the power load increases, the standby power supply will switch to Active state to provide sufficient power to the server. Zero-output mode can be enabled or disabled in the XClarity Controller web interface, Server Configuration > Power Policy. If you select Disable, then both power supplies will be in the Active state.

Power cords

Line cords and rack power cables with C13 connectors can be ordered as listed in the following table.

110V customers: If you plan to use the 1100W power supply with a 110V power source, select a power cable that is rated above 10A. Power cables that are rated at 10A or below are not supported with 110V power.

Table 42. Power cords

Part number	Feature code	Description
Rack cables - C13 to C14		
SL67B08593	BPHZ	0.5m, 10A/100-250V, C13 to C14 Jumper Cord
00Y3043	A4VP	1.0m, 10A/100-250V, C13 to IEC 320-C14 Rack Power Cable
4L67A08367	B0N5	1.0m, 13A/100-250V, C13 to C14 Jumper Cord
39Y7937	6201	1.5m, 10A/100-250V, C13 to IEC 320-C14 Rack Power Cable
4L67A08368	B0N6	1.5m, 13A/100-250V, C13 to C14 Jumper Cord
4L67A08365	B0N4	2.0m, 10A/100-250V, C13 to IEC 320-C14 Rack Power Cable
4L67A08369	6570	2.0m, 13A/100-250V, C13 to C14 Jumper Cord
4L67A08366	6311	2.8m, 10A/100-250V, C13 to IEC 320-C14 Rack Power Cable
4L67A08370	6400	2.8m, 13A/100-250V, C13 to C14 Jumper Cord
39Y7932	6263	4.3m, 10A/100-250V, C13 to IEC 320-C14 Rack Power Cable
4L67A08371	6583	4.3m, 13A/100-250V, C13 to C14 Rack Power Cable
Rack cables - C13 to C14 (Y-cable)		
00Y3046	A4VQ	1.345m, 2X C13 to C14 Jumper Cord, Rack Power Cable
00Y3047	A4VR	2.054m, 2X C13 to C14 Jumper Cord, Rack Power Cable
Rack cables - C13 to C20		
39Y7938	6204	2.8m, 10A/100-250V, C13 to IEC 320-C20 Rack Power Cable

Part number	Feature code	Description
Rack cables - C13 to C20 (Y-cable)		
47C2491	A3SW	1.2m, 16A/100-250V, 2 Short C13s to Short C20 Rack Power Cable
47C2492	A3SX	2.5m, 16A/100-250V, 2 Long C13s to Short C20 Rack Power Cable
47C2493	A3SY	2.8m, 16A/100-250V, 2 Short C13s to Long C20 Rack Power Cable
47C2494	A3SZ	4.1m, 16A/100-250V, 2 Long C13s to Long C20 Rack Power Cable
Line cords		
39Y7930	6222	2.8m, 10A/250V, C13 to IRAM 2073 (Argentina) Line Cord
81Y2384	6492	4.3m 10A/220V, C13 to IRAM 2073 (Argentina) Line Cord
39Y7924	6211	2.8m, 10A/250V, C13 to AS/NZ 3112 (Australia/NZ) Line Cord
81Y2383	6574	4.3m, 10A/230V, C13 to AS/NZS 3112 (Aus/NZ) Line Cord
69Y1988	6532	2.8m, 10A/250V, C13 to NBR 14136 (Brazil) Line Cord
81Y2387	6404	4.3m, 10A/250V, C13 - 2P+Gnd (Brazil) Line Cord
39Y7928	6210	2.8m, 220-240V, C13 to GB 2099.1 (China) Line Cord
81Y2378	6580	4.3m, 10A/220V, C13 to GB 2099.1 (China) Line Cord
39Y7918	6213	2.8m, 10A/250V, C13 to DK2-5a (Denmark) Line Cord
81Y2382	6575	4.3m, 10A/230V, C13 to DK2-5a (Denmark) Line Cord
39Y7917	6212	2.8m, 10A/230V, C13 to CEE7-VII (Europe) Line Cord
81Y2376	6572	4.3m, 10A/230V, C13 to CEE7-VII (Europe) Line Cord
39Y7927	6269	2.8m, 10A/250V, C13(2P+Gnd) (India) Line Cord
81Y2386	6567	4.3m, 10A/240V, C13 to IS 6538 (India) Line Cord
39Y7920	6218	2.8m, 10A/250V, C13 to SI 32 (Israel) Line Cord
81Y2381	6579	4.3m, 10A/230V, C13 to SI 32 (Israel) Line Cord
39Y7921	6217	2.8m, 220-240V, C13 to CEI 23-16 (Italy/Chile) Line Cord
81Y2380	6493	4.3m, 10A/230V, C13 to CEI 23-16 (Italy/Chile) Line Cord
46M2593	A1RE	2.8m, 12A/125V, C13 to JIS C-8303 (Japan) Line Cord
4L67A08362	6495	4.3m, 12A/200V, C13 to JIS C-8303 (Japan) Line Cord
39Y7926	6335	4.3m, 12A/100V, C13 to JIS C-8303 (Japan) Line Cord
39Y7922	6214	2.8m, 10A/250V, C13 to SABS 164 (S Africa) Line Cord
81Y2379	6576	4.3m, 10A/230V, C13 to SABS 164 (South Africa) Line Cord
39Y7925	6219	2.8m, 220-240V, C13 to KETI (S Korea) Line Cord
81Y2385	6494	4.3m, 12A/220V, C13 to KSC 8305 (S. Korea) Line Cord
39Y7919	6216	2.8m, 10A/250V, C13 to SEV 1011-S24507 (Swiss) Line Cord
81Y2390	6578	4.3m, 10A/230V, C13 to SEV 1011-S24507 (Sws) Line Cord
23R7158	6386	2.8m, 10A/125V, C13 to CNS 10917-3 (Taiwan) Line Cord
81Y2375	6317	2.8m, 10A/240V, C13 to CNS 10917-3 (Taiwan) Line Cord
81Y2374	6402	2.8m, 13A/125V, C13 to CNS 60799 (Taiwan) Line Cord
4L67A08363	AX8B	4.3m, 10A 125V, C13 to CNS 10917 (Taiwan) Line Cord
81Y2389	6531	4.3m, 10A/250V, C13 to 76 CNS 10917-3 (Taiwan) Line Cord
81Y2388	6530	4.3m, 13A/125V, C13 to CNS 10917 (Taiwan) Line Cord
39Y7923	6215	2.8m, 10A/250V, C13 to BS 1363/A (UK) Line Cord
81Y2377	6577	4.3m, 10A/230V, C13 to BS 1363/A (UK) Line Cord

Part number	Feature code	Description
90Y3016	6313	2.8m, 10A/120V, C13 to NEMA 5-15P (US) Line Cord
46M2592	A1RF	2.8m, 10A/250V, C13 to NEMA 6-15P Line Cord
00WH545	6401	2.8m, 13A/120V, C13 to NEMA 5-15P (US) Line Cord
4L67A08359	6370	4.3m, 10A/125V, C13 to NEMA 5-15P (US) Line Cord
4L67A08361	6373	4.3m, 10A/250V, C13 to NEMA 6-15P (US) Line Cord
4L67A08360	AX8A	4.3m, 13A/120V, C13 to NEMA 5-15P (US) Line Cord

Power cords (C19 connectors)

Line cords and rack power cables with C19 connectors can be ordered as listed in the following table.

Table 43. Power cords (C19 connectors)

Part number	Feature code	Description
Rack cables		
4L67A86677	BPJ0	0.5m, 16A/100-250V, C19 to IEC 320-C20 Rack Power Cable
4L67A86678	B4L0	1.0m, 16A/100-250V, C19 to IEC 320-C20 Rack Power Cable
4L67A86679	B4L1	1.5m, 16A/100-250V, C19 to IEC 320-C20 Rack Power Cable
4L67A86680	B4L2	2.0m, 16A/100-250V, C19 to IEC 320-C20 Rack Power Cable
39Y7916	6252	2.5m, 16A/100-240V, C19 to IEC 320-C20 Rack Power Cable
4L67A86681	B4L3	4.3m, 16A/100-250V, C19 to IEC 320-C20 Rack Power Cable
Line cords		
40K9777	6276	4.3m, 220-240V, C19 to IRAM 2073 (Argentina) Line cord
40K9773	6284	4.3m, 220-240V, C19 to AS/NZS 3112 (Aus/NZ) Line cord
40K9775	6277	4.3m, 250V, C19 to NBR 14136 (Brazil) Line Cord
40K9774	6288	4.3m, 220-240V, C19 to GB2099.1 (China) Line cord
40K9769	6283	4.3m, 16A/230V, C19 to IEC 309-P+N+G (Den/Sws) Line Cord
40K9766	6279	4.3m, 220-240V, C19 to CEE7-VII (European) Line cord
40K9776	6285	4.3m, 220-240V, C19 to IS6538 (India) Line cord
40K9771	6282	4.3m, 220-240V, C19 to SI 32 (Israel) Line cord
40K9768	6281	4.3m, 220-240V, C19 to CEI 23-16 (Italy) Line cord
40K9770	6280	4.3m, 220-240V, C19 to SABS 164 (South Africa) Line cord
41Y9231	6289	4.3m, 15A/250V, C19 to KSC 8305 (S. Korea) Line Cord
81Y2391	6549	4.3m, 16A/230V, C19 to SEV 1011 (Sws) Line Cord
41Y9230	6287	4.3m, 16A/250V, C19 to CNS 10917-3 (Taiwan) Line Cord
40K9767	6278	4.3m, 220-240V, C19 to BS 1363/A w/13A fuse (UK) Line Cord
40K9772	6275	4.3m, 16A/208V, C19 to NEMA L6-20P (US) Line Cord
00D7197	A1NV	4.3m, 15A/250V, C19 to NEMA 6-15P (US) Line Cord

Systems management

The SR850 V2 contains an integrated service processor, XClarity Controller (XCC), which provides advanced control, monitoring, and alerting functions. XCC is based on the Pilot4 XE401 baseboard management controller (BMC) using a dual-core ARM Cortex A9 service processor.

Topics in this section:

- Local management
- System status with XClarity Mobile
- Remote management
- Lenovo XClarity Provisioning Manager
- Lenovo XClarity Administrator
- Lenovo XClarity Essentials
- Lenovo XClarity Energy Manager
- Lenovo Capacity Planner

Local management

The server offers a front operator panel with key LED status indicators, as shown in the following figure.

Tip: The Network LED only shows network activity of the installed OCP network adapter.

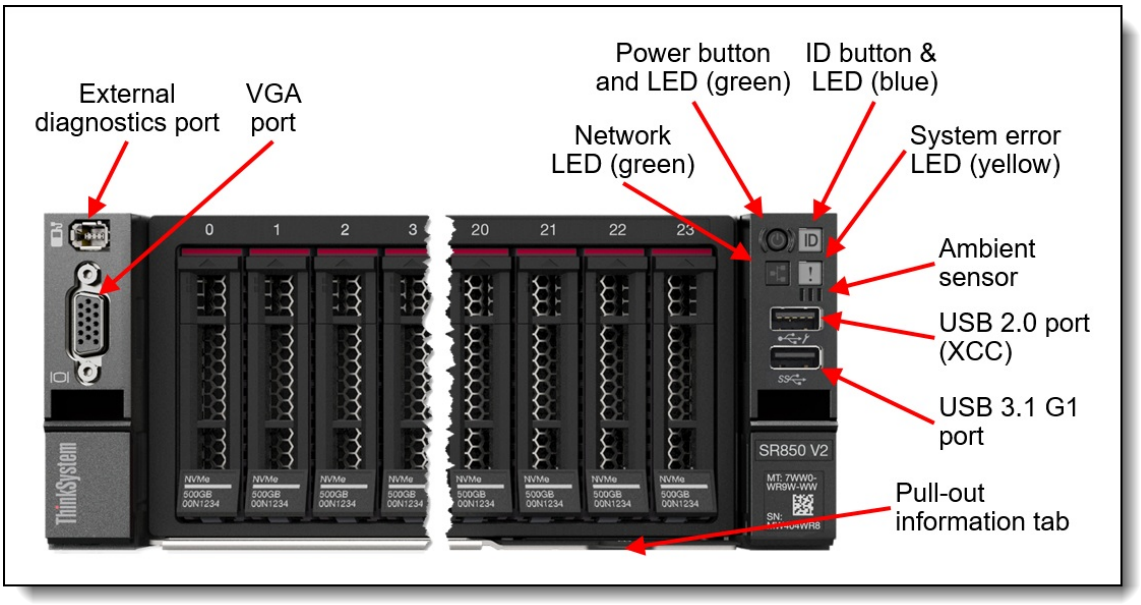

Figure 15. Front operator controls are on the left and right side of the server

Light path diagnostics

The server offers light path diagnostics. If an environmental condition exceeds a threshold or if a system component fails, XCC lights LEDs inside the server to help you diagnose the problem and find the failing part. The server has fault LEDs next to the following components:

- Each processor
- Each memory DIMM
- Each drive bay
- Each system fan
- Each power supply

A Light Path button is located on the system board, adjacent to Riser 1 as shown in the Internal view in the Components and connectors section. When you press this button, the LED associated with the failed component lights up. The button is attached to a supercap so that the LED lights up even if AC power is removed.

External Diagnostics Handset

The SR850 V2 also has a port to connect an External Diagnostics Handset as shown in the following figure. The External Diagnostics Handset has the same functions as the Integrated Diagnostics Panel but has the advantages of not consuming space on the front of the server plus it can be shared amongst many servers in your data center. The handset has a magnet on the back of it to allow you to easily mount it on a convenient place on any rack cabinet.

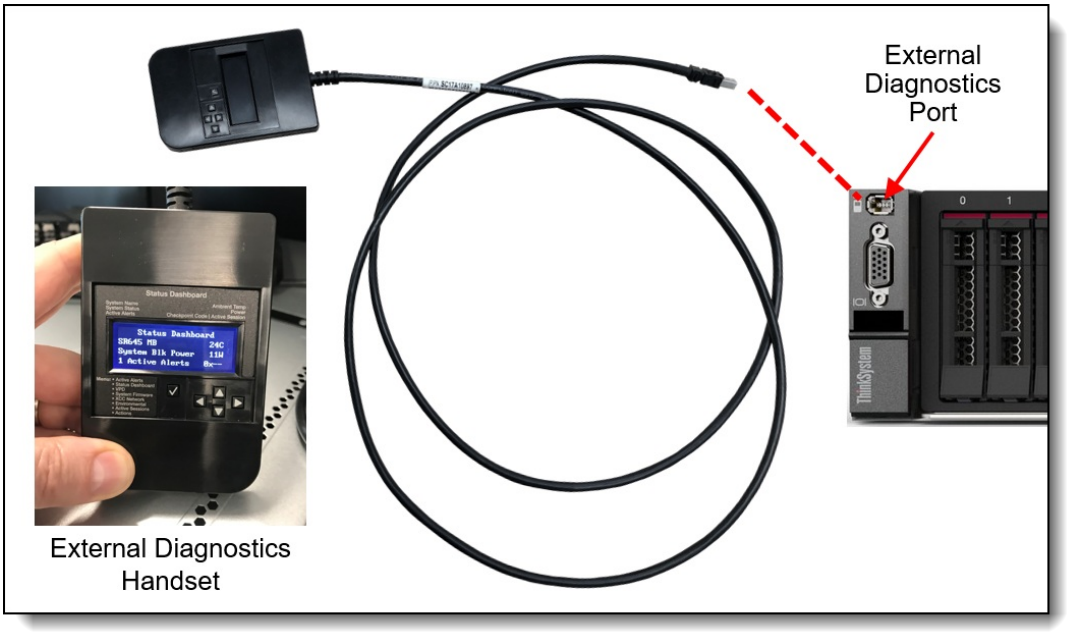

Figure 16. External Diagnostics Handset

Ordering information for the External Diagnostics Handset with is listed in the following table.

Table 44. External Diagnostics Handset ordering information

Part number	Feature code	Description
4TA7A64874	BEUX	ThinkSystem External Diagnostics Handset

Information tab

The front of the server also houses an information pull-out tab (also known as the network access tag). A label on the tab shows the network information (MAC address and other data) to remotely access XClarity Controller.

System status with XClarity Mobile

The XClarity Mobile app includes a tethering function where you can connect your Android or iOS device to the server via USB to see the status of the server.

The steps to connect the mobile device are as follows:

1. Enable USB Management on the server, by holding down the ID button for 3 seconds (or pressing the dedicated USB management button if one is present)
2. Connect the mobile device via a USB cable to the server's USB port with the management symbol 
3. In iOS or Android settings, enable Personal Hotspot or USB Tethering
4. Launch the Lenovo XClarity Mobile app

Once connected you can see the following information:

- Server status including error logs (read only, no login required)
- Server management functions (XClarity login credentials required)

Remote management

The server offers a dedicated RJ45 port at the rear of the server for remote management via the XClarity Controller management processor. The port supports 10/100/1000 Mbps speeds.

Remote server management is provided through industry-standard interfaces:

- Intelligent Platform Management Interface (IPMI) Version 2.0
- Simple Network Management Protocol (SNMP) Version 3 (no SET commands; no SMNP v1)
- Common Information Model (CIM-XML)
- Representational State Transfer (REST) support
- Redfish support (DMTF compliant)
- Web browser - HTML 5-based browser interface (Java and ActiveX not required) using a responsive design (content optimized for device being used - laptop, tablet, phone) with NLS support

IPMI via the Ethernet port (IPMI over LAN) is supported, however it is disabled by default. For CTO orders you can specify whether you want to the feature enabled or disabled in the factory, using the feature codes listed in the following table.

Table 45. IPMI-over-LAN settings

Part number	Feature code	Description
CTO only	B7XZ	Disable IPMI-over-LAN (default)
CTO only	B7Y0	Enable IPMI-over-LAN

The SR850 V2 has XCC Enterprise as a standard feature. XCC Enterprise includes a virtual presence (remote control and remote media) capability for remote server management.

The remote control functions include the following:

- Remotely viewing video with graphics resolutions up to 1600x1200 at 75 Hz with up to 23 bits per pixel, regardless of the system state
- Remotely accessing the server using the keyboard and mouse from a remote client
- Capturing blue-screen errors
- International keyboard mapping support
- LDAP-based authentication
- Boot Capture
- Remote mounting of ISO and IMG files
- Virtual console collaboration - Ability for up to 6 remote users to be log into the remote session simultaneously
- Power capping
- License for XClarity Energy Manager

Lenovo XClarity Administrator

Lenovo XClarity Administrator is a centralized resource management solution designed to reduce complexity, speed response, and enhance the availability of Lenovo systems and solutions. It provides agent-free hardware management for ThinkSystem servers, in addition to ThinkServer, System x, and Flex System servers. The administration dashboard is based on HTML 5 and allows fast location of resources so tasks can be run quickly.

Because Lenovo XClarity Administrator does not require any agent software to be installed on the managed endpoints, there are no CPU cycles spent on agent execution, and no memory is used, which means that up to 1GB of RAM and 1 - 2% CPU usage is saved, compared to a typical managed system where an agent is required.

Lenovo XClarity Administrator is an optional software component for the SR850 V2. The software can be downloaded and used at no charge to discover and monitor the SR850 V2 and to manage firmware upgrades.

If software support is required for Lenovo XClarity Administrator, or premium features such as configuration management and operating system deployment are required, Lenovo XClarity Pro software subscription should be ordered. Lenovo XClarity Pro is licensed on a per managed system basis, that is, each managed Lenovo system requires a license.

The following table lists the Lenovo XClarity software license options.

Table 46. Lenovo XClarity Pro ordering information

Part number	Feature code	Description
00MT201	1339	Lenovo XClarity Pro, per Managed Endpoint w/1 Yr SW S&S
00MT202	1340	Lenovo XClarity Pro, per Managed Endpoint w/3 Yr SW S&S
00MT203	1341	Lenovo XClarity Pro, per Managed Endpoint w/5 Yr SW S&S
7S0X000HWW	SAYV	Lenovo XClarity Pro, per Managed Endpoint w/6 Yr SW S&S
7S0X000JWW	SAYW	Lenovo XClarity Pro, per Managed Endpoint w/7 Yr SW S&S

Lenovo XClarity Administrator offers the following standard features that are available at no charge:

- Auto-discovery and monitoring of Lenovo systems
- Firmware updates and compliance enforcement
- External alerts and notifications via SNMP traps, syslog remote logging, and e-mail
- Secure connections to managed endpoints
- NIST 800-131A or FIPS 140-2 compliant cryptographic standards between the management solution and managed endpoints
- Integration into existing higher-level management systems such as cloud automation and orchestration tools through REST APIs, providing extensive external visibility and control over hardware resources
- An intuitive, easy-to-use GUI
- Scripting with Windows PowerShell, providing command-line visibility and control over hardware resources

Lenovo XClarity Administrator offers the following premium features that require an optional Pro license:

- Pattern-based configuration management that allows to define configurations once and apply repeatedly without errors when deploying new servers or redeploying existing servers without disrupting the fabric
- Bare-metal deployment of operating systems and hypervisors to streamline infrastructure provisioning

For more information, refer to the Lenovo XClarity Administrator Product Guide:
http://lenovopress.com/tips1200

Lenovo XClarity Integrators

Lenovo also offers software plug-in modules, Lenovo XClarity Integrators, to manage physical infrastructure from leading external virtualization management software tools including those from Microsoft and VMware.

These integrators are offered at no charge, however if software support is required, a Lenovo XClarity Pro software subscription license should be ordered.

Lenovo XClarity Integrators offer the following additional features:

- Ability to discover, manage, and monitor Lenovo server hardware from VMware vCenter or Microsoft System Center
- Deployment of firmware updates and configuration patterns to Lenovo x86 rack servers and Flex System from the virtualization management tool
- Non-disruptive server maintenance in clustered environments that reduces workload downtime by dynamically migrating workloads from affected hosts during rolling server updates or reboots
- Greater service level uptime and assurance in clustered environments during unplanned hardware events by dynamically triggering workload migration from impacted hosts when impending hardware failures are predicted

For more information about all the available Lenovo XClarity Integrators, see the Lenovo XClarity Administrator Product Guide: https://lenovopress.com/tips1200-lenovo-xclarity-administrator

Lenovo XClarity Provisioning Manager

Lenovo XClarity Provisioning Manager (LXPM) is a UEFI-based application embedded in ThinkSystem servers and accessible via the F1 key during system boot.

LXPM provides the following functions:

- Graphical UEFI Setup
- System inventory information and VPD update
- System firmware updates (UEFI and XCC)
- RAID setup wizard
- OS installation wizard (including unattended OS installation)
- Diagnostics functions

Lenovo XClarity Essentials

Lenovo offers the following XClarity Essentials software tools that can help you set up, use, and maintain the server at no additional cost:

- Lenovo Essentials OneCLI

  OneCLI is a collection of server management tools that uses a command line interface program to manage firmware, hardware, and operating systems. It provides functions to collect full system health information (including health status), configure system settings, and update system firmware and drivers.

- Lenovo Essentials UpdateXpress

  The UpdateXpress tool is a standalone GUI application for firmware and device driver updates that enables you to maintain your server firmware and device drivers up-to-date and help you avoid unnecessary server outages. The tool acquires and deploys individual updates and UpdateXpress System Packs (UXSPs) which are integration-tested bundles.

- Lenovo Essentials Bootable Media Creator

  The Bootable Media Creator (BOMC) tool is used to create bootable media for offline firmware update.

For more information and downloads, visit the Lenovo XClarity Essentials web page:
http://support.lenovo.com/us/en/documents/LNVO-center

Lenovo XClarity Energy Manager

Lenovo XClarity Energy Manager (LXEM) is a power and temperature management solution for data centers. It is an agent-free, web-based console that enables you to monitor and manage power consumption and temperature in your data center through the management console. It enables server density and data center capacity to be increased through the use of power capping.

LXEM is a licensed product. A single-node LXEM license is included with the XClarity Controller Enterprise version. Because the Enterprise version of XCC is standard in the SR850 V2, a license for XClarity Energy Manager is included.

For more information about XClarity Energy Manager, see the following resources:

- Lenovo Support page:
  https://datacentersupport.lenovo.com/us/en/solutions/lnvo-lxem
- Lenovo Information Center:
  https://sysmgt.lenovofiles.com/help/topic/LXEM/lxem_overview.html?cp=4

Security

The server offers the following electronic security features:

- Administrator and power-on password
- Trusted Platform Module (TPM) supporting TPM 2.0 (TPM 1.2 not supported)
- Optional Nationz TPM 2.0, available only in China (CTO only)
- Self-encrypting drives with support for IBM Security Key Lifecycle Manager

The server is NIST SP 800-147B compliant.

The server also offers the following physical security features:

- Chassis intrusion switch (standard on some models, otherwise available as a field upgrade)
- Lockable top cover to help prevent access to internal components
- Optional lockable front security bezel

The optional lockable front security bezel is shown in the following figure and includes a key that enables you to secure the bezel over the drives and system controls thereby reducing the chance of unauthorized or accidental access to the server.

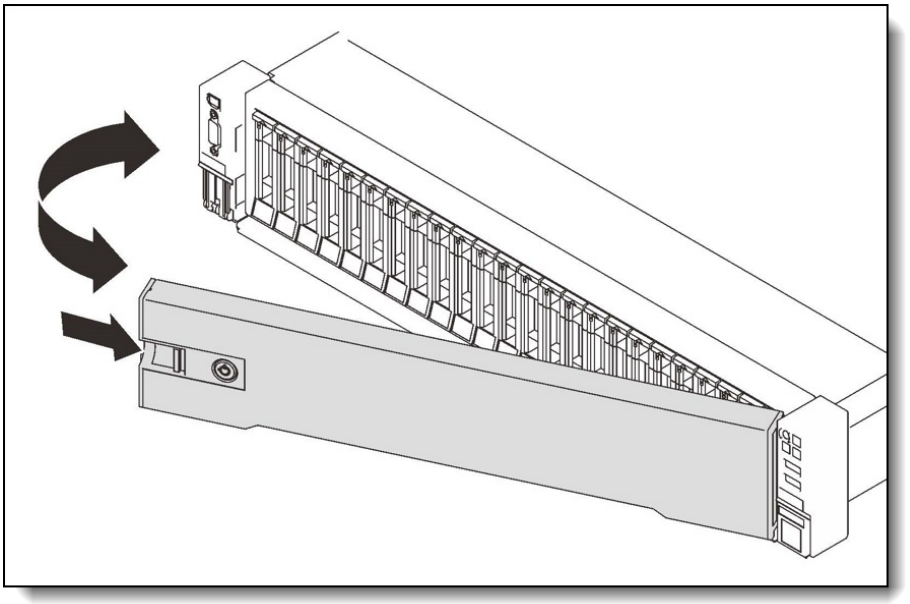

Figure 17. Lockable front security bezel

The dimensions of the security bezel are:

- Width: 437 mm (17.2 in.)
- Height: 87 mm (3.4 in.)
- Width: 23 mm (0.9 in.)

The following table lists the security options for the server.

Table 47. Security features

Part number	Feature code	Description
4M27A11826	BCPG	ThinkSystem SR850 V2 Intrusion Cable Kit
4XH7A09886	B8M2	ThinkSystem 2U Security Bezel v2
CTO only*	B8LE	ThinkSystem Nationz Trusted Platform Module v2.0 (China customers only)

* The component is CTO on pre-configured models only. Not available as a field upgrade.

For SED drives and IBM Security Key Lifecycle Manager support see the SED encryption key management with ISKLM section.

Platform Firmware Resiliency - Lenovo ThinkShield

Lenovo's ThinkShield Security is a transparent and comprehensive approach to security that extends to all dimensions of our data center products: from development, to supply chain, and through the entire product lifecycle.

The ThinkSystem SR850 V2 includes Platform Firmware Resiliency (PFR) hardware Root of Trust (RoT) which enables the system to be NIST SP800-193 compliant. This offering further enhances key platform subsystem protections against unauthorized firmware updates and corruption, to restore firmware to an integral state, and to closely monitor firmware for possible compromise from cyber attacks.

PFR operates upon the following server components:

- UEFI image – the low-level server firmware that connects the operating system to the server hardware
- XCC image – the management “engine” software that controls and reports on the server status separate from the server operating system
- FPGA image – the code that runs the server’s lowest level hardware controller on the motherboard

The Lenovo Platform Root of Trust Hardware performs the following three main functions:

- Detection – Measures the firmware and updates for authenticity
- Recovery – Recovers a corrupted image to a known-safe image
- Protection – Monitors the system to ensure the known-good firmware is not maliciously written

These enhanced protection capabilities are implemented using a dedicated, discrete security processor whose implementation has been rigorously validated by leading third-party security firms. Security evaluation results and design details are available for customer review – providing unprecedented transparency and assurance.

The SR850 V2 includes support for Secure Boot, a UEFI firmware security feature developed by the UEFI Consortium that ensures only immutable and signed software are loaded during the boot time. The use of Secure Boot helps prevent malicious code from being loaded and helps prevent attacks, such as the installation of rootkits. Lenovo offers the capability to enable secure boot in the factory, to ensure end-to-end protection. Alternatively, Secure Boot can be left disabled in the factory, allowing the customer to enable it themselves at a later point, if desired.

The following table lists the relevant feature code(s).

Table 48. Secure Boot options

Part number	Feature code	Description	Purpose
CTO only	AUK7	TPM 2.0 and Secure Boot	Configure the system in the factory with Secure Boot enabled.
CTO only	B0MK	Enable TPM 2.0	Configure the system without Secure Boot enabled. Customers can enable Secure Boot later if desired.

Tip: If Secure Boot is not enabled in the factory, it can be enabled later by the customer. However once Secure Boot is enabled, it cannot be disabled.

Intel Transparent Supply Chain

Add a layer of protection in your data center and have peace of mind that the server hardware you bring into it is safe authentic and with documented, testable, and provable origin.

Lenovo has one of the world’s best supply chains, as ranked by Gartner Group, backed by extensive and mature supply chain security programs that exceed industry norms and US Government standards. Now we are the first Tier 1 manufacturer to offer Intel® Transparent Supply Chain in partnership with Intel, offering you an unprecedented degree of supply chain transparency and assurance.

To enable Intel Transparent Supply Chain for the Intel-based servers in your order, add the following feature code in the DCSC configurator, under the Security tab.

Table 49. Intel Transparent Supply Chain ordering information

Feature code	Description
BB0P	Intel Transparent Supply Chain

For more information on this offering, see the paper *Introduction to Intel Transparent Supply Chain on Lenovo ThinkSystem Servers*, available from https://lenovopress.com/lp1434-introduction-to-intel-transparent-supply-chain-on-thinksystem-servers.

Security standards

The SR850 V2 supports the following security standards and capabilities:

- **Industry Standard Security Capabilities**
  - Intel CPU Enablement
    - AES-NI (Advanced Encryption Standard New Instructions)
    - CBnT (Converged Boot Guard and Trusted Execution Technology)
    - CET (Control flow Enforcement Technology)
    - Hardware-based side channel attack resilience enhancements
    - MKTME/TME (Multi-Key Total Memory Encryption)
    - SGX (Software Guard eXtensions)
    - SGX-TEM (Trusted Environment Mode)
    - TDX (Trust Domain Extensions)
    - TXT (Trusted eXecution Technology)
    - VT (Virtualization Technology)
    - XD (eXecute Disable)
  - Microsoft Windows Security Enablement
    - Credential Guard
    - Device Guard
    - Host Guardian Service
  - TCG (Trusted Computing Group) TPM (Trusted Platform Module) 2.0
  - UEFI (Unified Extensible Firmware Interface) Forum Secure Boot
- **Hardware Root of Trust and Security**
  - Independent security subsystem providing platform-wide NIST SP800-193 compliant Platform Firmware Resilience (PFR)
  - Management domain RoT supplemented by the Secure Boot features of XCC
- **Platform Security**

  For more information on platform security, see the paper “How to Harden the Security of your ThinkSystem Server and Management Applications” available from https://lenovopress.com/lp1260-how-to-harden-the-security-of-your-thinksystem-server.

  - Boot and run-time firmware integrity monitoring with rollback to known-good firmware (e.g., “self-healing”)
  - Non-volatile storage bus security monitoring and filtering
  - Resilient firmware implementation, such as to detect and defeat unauthorized flash writes or SMM (System Management Mode) memory incursions
  - Patented IPMI KCS channel privileged access authorization (USPTO Patent# 11,256,810)
  - Host and management domain authorization, including integration with CyberArk for enterprise password management

- KMIP (Key Management Interoperability Protocol) compliant, including support for IBM SKLM and Thales KeySecure
- Reduced “out of box” attack surface
- Configurable network services

- **Standards Compliance and/or Support**
  - NIST SP800-131A rev 2 “Transitioning the Use of Cryptographic Algorithms and Key Lengths”
  - NIST SP800-147B “BIOS Protection Guidelines for Servers”
  - NIST SP800-193 “Platform Firmware Resiliency Guidelines”
  - ISO/IEC 11889 “Trusted Platform Module Library”
  - Common Criteria TCG Protection Profile for “PC Client Specific TPM 2.0”
  - European Union Commission Regulation 2019/424 (“ErP Lot 9”) “Ecodesign Requirements for Servers and Data Storage Products” Secure Data Deletion
  - Optional FIPS 140-2 validated Self-Encrypting Disks (SEDs) with external KMIP-based key management
- **Product and Supply Chain Security**
  - Suppliers validated through Lenovo’s Trusted Supplier Program
  - Developed in accordance with Lenovo’s Secure Development Lifecycle (LSDL)
  - Continuous firmware security validation through automated testing, including static code analysis, dynamic network and web vulnerability testing, software composition analysis, and subsystem-specific testing, such as UEFI security configuration validation
  - Ongoing security reviews by US-based security experts, with attestation letters available from our third-party security partners
  - Digitally signed firmware, stored and built on US-based infrastructure and signed on US-based Hardware Security Modules (HSMs)
  - Manufacturing transparency via Intel Transparent Supply Chain (for details, see https://lenovopress.com/lp1434-introduction-to-intel-transparent-supply-chain-on-lenovo-thinksystem-servers)
  - TAA (Trade Agreements Act) compliant manufacturing, by default in Mexico for North American markets with additional US and EU manufacturing options
  - US 2019 NDAA (National Defense Authorization Act) Section 889 compliant

Rack installation

The following table lists the rack installation options that are available for the server.

Table 50. Rack installation options

Option	Feature Code	Description
4XF7A12865	BCPE	ThinkSystem SR850 V2 Rail Kit
7M27A05698	AVBX	ThinkSystem 2U CMA Upgrade Kit for Toolless Slide Rail

The following table summarizes the rail kit features and specifications.

Table 51. Rail kit features and specifications summary

Feature	ThinkSystem SR850 V2 Rail Kit
Part number	4XF7A12865
Rail type	Full-out slide rail (ball bearing)
Toolless installation	Yes
Cable Management Arm (CMA) support	Optional (7M27A05698)
In-rack server maintenance	Yes
1U PDU support	Yes
0U PDU support	Limited*
Rack type	Four-post IBM and Lenovo standard rack, complying with the IEC standard
Mounting holes	Square (9.5mm), round (7.1mm)
Mounting flange thickness	2.0-3.3 mm (0.08 - 0.13 in.)
Distance between front and rear mounting flanges	610-762 mm (24-30 in.)
Rail length***	880 mm (34.6 in.)
Rail travel length	850 mm (33.5 in.)

* For 0U PDU support, the rack must be at least 1100 mm (43.31 in.) deep without the CMA, or at least 1200 mm (47.24 in.) deep if the CMA is used.
*** Measured when mounted on the rack, from the front surface of the front mounting flange to the rear most point of the rail.

Operating system support

The server supports the following operating systems:

- Microsoft Windows Server 2016
- Microsoft Windows Server 2019
- Microsoft Windows Server 2022
- Red Hat Enterprise Linux 7.9
- Red Hat Enterprise Linux 8.2
- Red Hat Enterprise Linux 8.3
- Red Hat Enterprise Linux 8.4
- Red Hat Enterprise Linux 8.5
- Red Hat Enterprise Linux 8.6
- Red Hat Enterprise Linux 8.7
- Red Hat Enterprise Linux 8.8
- Red Hat Enterprise Linux 9.0
- Red Hat Enterprise Linux 9.1
- Red Hat Enterprise Linux 9.2
- SUSE Linux Enterprise Server 12 SP5
- SUSE Linux Enterprise Server 12 Xen SP5
- SUSE Linux Enterprise Server 15 SP2
- SUSE Linux Enterprise Server 15 SP3
- SUSE Linux Enterprise Server 15 SP4
- SUSE Linux Enterprise Server 15 SP5
- SUSE Linux Enterprise Server 15 Xen SP2
- SUSE Linux Enterprise Server 15 Xen SP3
- SUSE Linux Enterprise Server 15 Xen SP4
- SUSE Linux Enterprise Server 15 Xen SP5
- Ubuntu 22.04 LTS 64-bit
- VMware ESXi 7.0 U1
- VMware ESXi 7.0 U3
- VMware ESXi 8.0
- VMware ESXi 8.0 U1
- VMware ESXi 8.0 U2

Notes:

- VMware ESXi 7.0 U1 does not support Intel VROC. Only VMD is supported.

For a complete list of supported, certified and tested operating systems, plus additional details and links to relevant web sites, see the Operating System Interoperability Guide:
https://lenovopress.com/osig#servers=sr850-v2-7d31-7d32

For configure-to-order configurations, the server can be preloaded with VMware ESXi installed. Ordering information is listed in the following table.

Table 52. VMware ESXi preload

Part number	Feature code	Description
CTO only	BE5E	VMware ESXi 7.0 U1 (Factory Installed)
CTO only	BHSR	VMware ESXi 7.0 U2 (Factory Installed)
CTO only	BMEY	VMware ESXi 7.0 U3 (Factory Installed)
CTO only	BMT5	VMware ESXi 8.0 (Factory Installed)
CTO only	BQ8S	VMware ESXi 8.0 U1 (Factory Installed)

Physical and electrical specifications

The SR850 V2 has the following overall physical dimensions, excluding components that extend outside the standard chassis, such as EIA flanges, front security bezel (if any), and power supply handles:

- Width: 445 mm (17.5 inches)
- Height: 87 mm (3.4 inches)
- Depth: 825 mm (32.5 inches)

The following table lists the detailed dimensions. See the figure below for the definition of each dimension.

Table 53. Detailed dimensions

Dimension	Description
482 mm	X_a = Width, to the outsides of the front EIA flanges
435 mm	X_b = Width, to the rack rail mating surfaces
445 mm	X_c = Width, to the outer most chassis body feature
87 mm	Ya = Height, from the bottom of chassis to the top of the chassis
749 mm	Za = Depth, from the rack flange mating surface to the rearmost I/O port surface
789 mm	Zb = Depth, from the rack flange mating surface to the rearmost feature of the chassis body
817 mm	Zc = Depth, from the rack flange mating surface to the rearmost feature such as power supply handle
36 mm	Zd = Depth, from the forwardmost feature on front of EIA flange to the rack flange mating surface
50 mm	Ze = Depth, from the front of security bezel (if applicable) or forwardmost feature to the rack flange mating surface

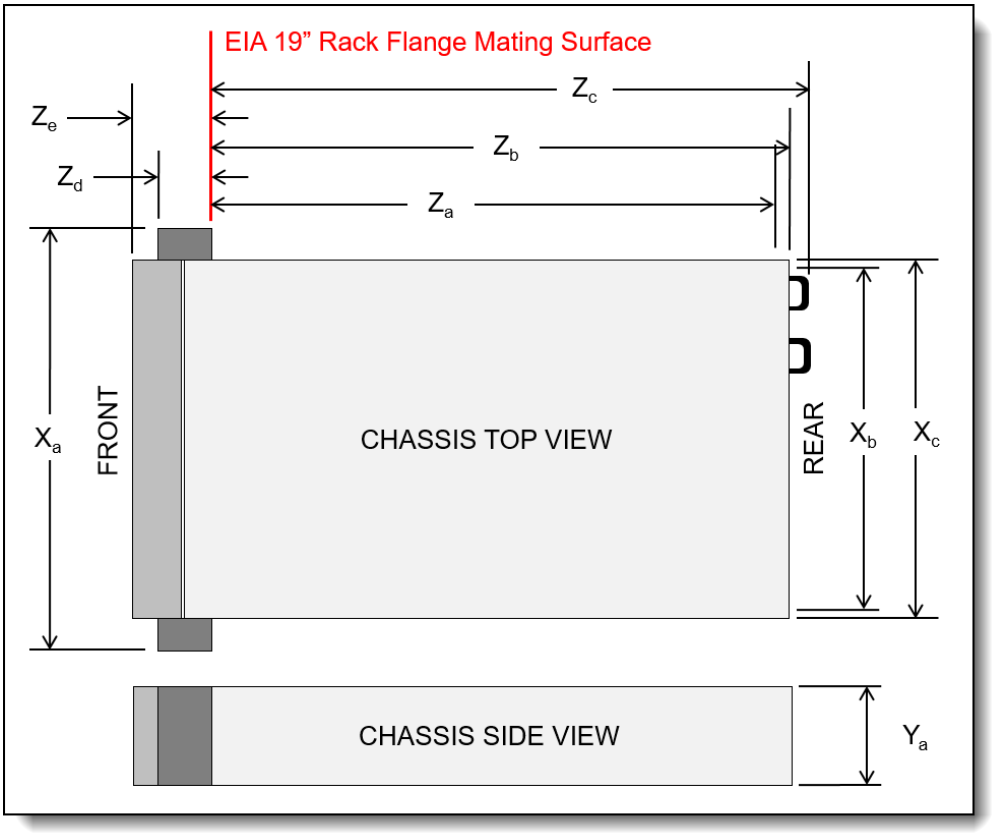

Figure 18. Server dimensions

The shipping dimensions (cardboard packaging) of the SR850 V2 are as follows:

- Width: 592 mm (23.3 inches)
- Height: 292 mm (11.5 inches)
- Depth: 1095 mm (43.1 inches)

The server has the following weight:

- Minimum configuration: 31 kg (68.3 lb)
- Maximum configuration: 40 kg (88.2 lb)

The server has the following electrical specifications:

- Input voltage:
  - 100 to 127 (nominal) Vac, 50 Hz or 60 Hz
  - 200 to 240 (nominal) Vac, 50 Hz or 60 Hz
  - 180 to 300 Vdc (China only)
- Inlet current:
  - 100-127 V:
    - 750W Titanium power supply: Not supported
    - 1100W power supply: 12.1 A*
    - 1800W power supply: Not supported
    - 2400W power supply: Not supported
  - 200-240 V:
    - 750W Titanium power supply: 3.8 A
    - 1100W power supply: 5.6 A
    - 1800W power supply: 9.3 A
    - 2400W power supply: 12.4 A

* In China, this power supply cannot exceed 10 A current.

Operating environment

ThinkSystem SR850 V2 complies with ASHRAE Class A2 specifications. Depending on the hardware configuration, some models comply with ASHRAE Class A3 and Class A4 specifications. System performance may be impacted when operating temperature is outside AHSARE A2 specification.

To comply with ASHRAE class A3 and class A4 specifications, the server models must meet the following hardware configuration requirements:

- Two power supplies installed
- GPUs not installed
- NVMe drives not installed
- PCIe flash storage adapters not installed
- DCPMMs not installed
- Mellanox CX-6 HDR or HDR100 adapter cards not installed
- CPU core speed may be reduced depending on the processor selected.

Temperature and humidity

The server is supported in the following environment:

- Air temperature:
  - Operating
    - ASHARE Class A2: 10°C to 35°C (50°F to 95°F); the maximum ambient temperature decreases by 1°C for every 300 m (984 ft) increase in altitude above 900 m (2,953 ft).
    - ASHARE Class A3: 5°C to 40°C (41°F to 104°F); the maximum ambient temperature decreases by 1°C for every 175 m (574 ft) increase in altitude above 900 m (2,953 ft).
    - ASHARE Class A4: 5°C to 45°C (41°F to 113°F); the maximum ambient temperature decreases by 1°C for every 125 m (410 ft) increase in altitude above 900 m (2,953 ft).

    - Server off: 5°C to 45°C (41°F to 113°F)
    - Shipment/storage: -40°C to 60°C (-40°F to 140°F)
- Maximum altitude: 3,050 m (10,000 ft)
- Relative Humidity (non-condensing):
    - Operating
        - ASHRAE Class A2: 8% to 80%; maximum dew point: 21°C (70°F)
        - ASHRAE Class A3: 8% to 85%; maximum dew point: 24°C (75°F)
        - ASHRAE Class A4: 8% to 90%; maximum dew point: 24°C (75°F)
    - Shipment/storage: 8% to 90%

Ambient temperature requirements

Adjust ambient temperature when specific components are installed:

- Keep ambient temperature to 35°C or lower when one or more of the following components are installed.
    - Processors with TDP value greater than 165W and less than/equal 205W (165W < TDP ≤ 205W)
    - DRAM DIMMs with capacity larger than 64 GB
- Keep room temperature to 30°C or lower when one or more of the following components are installed.
    - Processors with TDP value greater than 205W (TDP > 205W)
    - NVIDIA T4 GPUs
    - Persistent memory: To avoid triggering throttle, it is advised that the ambient temperature is kept 27°C or lower when persistent memory modules are installed.

Acoustic noise emissions

The server has the following acoustic noise emissions declaration:

- Sound power level (L_{WAd})
    - Idling: Typical configuration: 6.2 Bel, GPU configuration: 6.9 Bel, Rich configuration: 6.6 Bel
    - Operating: Typical configuration: 7.4 Bel, GPU configuration: 8.2 Bel, Rich configuration: 7.5 Bel
- Sound pressure level (L_{pAm}):
    - Idling: Typical configuration: 46 dBA, GPU configuration: 53 dBA, Rich configuration: 50 dBA
    - Operating: Typical configuration: 58 dBA, GPU configuration: 67 dBA, Rich configuration: 60 dBA

Notes:

- These sound levels were measured in controlled acoustical environments according to procedures specified by ISO7779 and are reported in accordance with ISO 9296.
- The declared acoustic sound levels are based on the specified configurations, which may change slightly depending on configuration/conditions.
    - Typical configuration: 4x 205W processors, 24x 64GB DIMMs, 8x SAS drives, RAID 930-8i, Intel X710-DA2 PCIe 10Gb 2-Port, Intel X550-T2 Dual Port 10 GBase-T, 2x 1800W power supplies
    - GPU configuration: 4x 165W processors, 24x 64 GB DIMMs, 16x SAS drives, RAID 940-16i, Intel X710-DA2 PCIe 10Gb 2-Port, 2x NVIDIA Tesla T4 GPUs, 2x 1800W power supplies
    - Rich configuration: 4x 250W processors, 48x 64 GB DIMMs, 24x SAS drives, RAID 940-16i, 940 8i, Intel X710-DA2 PCIe 10Gb 2-Port, Intel X550-T2 Dual Port 10GBase-T, 2x 2400W power supplies
- Government regulations (such as those prescribed by OSHA or European Community Directives) may govern noise level exposure in the workplace and may apply to you and your server installation. The actual sound pressure levels in your installation depend upon a variety of factors, including the number of racks in the installation; the size, materials, and configuration of the room; the noise levels from other equipment; the room ambient temperature, and employee's location in relation to the

equipment. Further, compliance with such government regulations depends on a variety of additional factors, including the duration of employees' exposure and whether employees wear hearing protection. Lenovo recommends that you consult with qualified experts in this field to determine whether you are in compliance with the applicable regulations.

Vibration and shock

The server has the following vibration and shock limits:

- Vibration:
  - Operating: 0.21 G rms at 5 Hz to 500 Hz for 15 minutes across 3 axes
  - Non-operating: 1.04 G rms at 2 Hz to 200 Hz for 15 minutes across 6 surfaces
- Shock:
  - Operating: 15 G for 3 milliseconds in each direction (positive and negative X, Y, and Z axes)
  - Non-operating:
    - 23 kg - 31 kg: 35 G for 152 in./sec velocity change across 6 surfaces
    - 32 kg - 68 kg: 35 G for 136 in./sec velocity change across 6 surfaces

Particulate contamination

Airborne particulates (including metal flakes or particles) and reactive gases acting alone or in combination with other environmental factors such as humidity or temperature might damage the system that might cause the system to malfunction or stop working altogether.

The following specifications indicate the limits of particulates that the system can tolerate:

- Reactive gases:
  - The reactivity rate of copper coupons shall be less than 200 Angstroms per month (Å/month)
  - The reactivity rate of silver coupons shall be less than 200 Å/month
- Airborne particulates:
  - The room air should be continuously filtered with MERV 8 filters.
  - Air entering a data center should be filtered with MERV 11 or preferably MERV 13 filters.
  - The deliquescent relative humidity of the particulate contamination should be more than 60% RH
  - Data centers must be free of zinc whiskers

For additional information, see the Specifications section of the Setup Guide for the server, available from the Lenovo Documents site, https://pubs.lenovo.com/

Warranty and Support

The SR850 V2 has a 1-year or 3-year warranty based on the machine type of the system:

- 7D31 - 1-year warranty
- 7D32 - 3-year warranty
- 7D33 - SAP HANA configurations with 3-year warranty

The standard warranty terms are customer-replaceable unit (CRU) and onsite (for field-replaceable units FRUs only) with standard call center support during normal business hours and 9x5 Next Business Day Parts Delivered.

Lenovo’s additional support services provide a sophisticated, unified support structure for your data center, with an experience consistently ranked number one in customer satisfaction worldwide. Available offerings include:

- **Premier Support**

  Premier Support provides a Lenovo-owned customer experience and delivers direct access to technicians skilled in hardware, software, and advanced troubleshooting, in addition to the following:

  - Direct technician-to-technician access through a dedicated phone line
  - 24x7x365 remote support
  - Single point of contact service
  - End to end case management
  - Third-party collaborative software support
  - Online case tools and live chat support
  - On-demand remote system analysis

- **Warranty Upgrade (Preconfigured Support)**

  Services are available to meet the on-site response time targets that match the criticality of your systems.

  - 3, 4, or 5 years of service coverage
  - 1-year or 2-year post-warranty extensions
  - **Foundation Service**: 9x5 service coverage with next business day onsite response. YourDrive YourData is an optional extra (see below).
  - **Essential Service:** 24x7 service coverage with 4-hour onsite response or 24-hour committed repair (available only in select markets). Bundled with YourDrive YourData.
  - **Advanced Service:** 24x7 service coverage with 2-hour onsite response or 6-hour committed repair (available only in select markets). Bundled with YourDrive YourData.

- **Managed Services**

  Lenovo Managed Services provides continuous 24x7 remote monitoring (plus 24x7 call center availability) and proactive management of your data center using state-of-the-art tools, systems, and practices by a team of highly skilled and experienced Lenovo services professionals.

  Quarterly reviews check error logs, verify firmware & OS device driver levels, and software as needed. We'll also maintain records of latest patches, critical updates, and firmware levels, to ensure you systems are providing business value through optimized performance.

- **Technical Account Management (TAM)**

  A Lenovo Technical Account Manager helps you optimize the operation of your data center based on a deep understanding of your business. You gain direct access to your Lenovo TAM, who serves as your single point of contact to expedite service requests, provide status updates, and furnish reports to track incidents over time. In addition, your TAM will help proactively make service recommendations and manage your service relationship with Lenovo to make certain your needs are met.

- **Enterprise Server Software Support**

  Enterprise Software Support is an additional support service providing customers with software support on Microsoft, Red Hat, SUSE, and VMware applications and systems. Around the clock availability for critical problems plus unlimited calls and incidents helps customers address challenges fast, without incremental costs. Support staff can answer troubleshooting and diagnostic questions, address product comparability and interoperability issues, isolate causes of problems, report defects to software vendors, and more.

- **YourDrive YourData**

  Lenovo's YourDrive YourData is a multi-drive retention offering that ensures your data is always under your control, regardless of the number of drives that are installed in your Lenovo server. In the unlikely event of a drive failure, you retain possession of your drive while Lenovo replaces the failed drive part. Your data stays safely on your premises, in your hands. The YourDrive YourData service can be purchased in convenient bundles and is optional with Foundation Service. It is bundled with Essential Service and Advanced Service.

- **Health Check**

  Having a trusted partner who can perform regular and detailed health checks is central to maintaining efficiency and ensuring that your systems and business are always running at their best. Health Check supports Lenovo-branded server, storage, and networking devices, as well as select Lenovo-supported products from other vendors that are sold by Lenovo or a Lenovo-Authorized Reseller.

Examples of region-specific warranty terms are second or longer business day parts delivery or parts-only base warranty.

If warranty terms and conditions include onsite labor for repair or replacement of parts, Lenovo will dispatch a service technician to the customer site to perform the replacement. Onsite labor under base warranty is limited to labor for replacement of parts that have been determined to be field-replaceable units (FRUs). Parts that are determined to be customer-replaceable units (CRUs) do not include onsite labor under base warranty.

If warranty terms include parts-only base warranty, Lenovo is responsible for delivering only replacement parts that are under base warranty (including FRUs) that will be sent to a requested location for self-service. Parts-only service does not include a service technician being dispatched onsite. Parts must be changed at customer's own cost and labor and defective parts must be returned following the instructions supplied with the spare parts.

Lenovo Service offerings are region-specific. Not all preconfigured support and upgrade options are available in every region. For information about Lenovo service upgrade offerings that are available in your region, refer to the following resources:

- Service part numbers in Lenovo Data Center Solution Configurator (DCSC):
  http://dcsc.lenovo.com/#/services
- Lenovo Services Availability Locator
  http://lenovolocator.com/

For service definitions, region-specific details, and service limitations, please refer to the following documents:

- Lenovo Statement of Limited Warranty for Infrastructure Solutions Group (ISG) Servers and System Storage
  http://pcsupport.lenovo.com/us/en/solutions/ht503310
- Lenovo Data Center Services Agreement
  http://support.lenovo.com/us/en/solutions/ht116628

Services

Lenovo Services is a dedicated partner to your success. Our goal is to reduce your capital outlays, mitigate your IT risks, and accelerate your time to productivity.

Note: Some service options may not be available in all markets or regions. For more information, go to https://www.lenovo.com/services. For information about Lenovo service upgrade offerings that are available in your region, contact your local Lenovo sales representative or business partner.

Here's a more in-depth look at what we can do for you:

- **Asset Recovery Services**

  Asset Recovery Services (ARS) helps customers recover the maximum value from their end-of-life equipment in a cost-effective and secure way. On top of simplifying the transition from old to new equipment, ARS mitigates environmental and data security risks associated with data center equipment disposal. Lenovo ARS is a cash-back solution for equipment based on its remaining market value, yielding maximum value from aging assets and lowering total cost of ownership for your customers. For more information, see the ARS page, https://lenovopress.com/lp1266-reduce-e-waste-and-grow-your-bottom-line-with-lenovo-ars.

- **Assessment Services**

  An Assessment helps solve your IT challenges through an onsite, multi-day session with a Lenovo technology expert. We perform a tools-based assessment which provides a comprehensive and thorough review of a company's environment and technology systems. In addition to the technology based functional requirements, the consultant also discusses and records the non-functional business requirements, challenges, and constraints. Assessments help organizations like yours, no matter how large or small, get a better return on your IT investment and overcome challenges in the ever-changing technology landscape.

- **Design Services**

  Professional Services consultants perform infrastructure design and implementation planning to support your strategy. The high-level architectures provided by the assessment service are turned into low level designs and wiring diagrams, which are reviewed and approved prior to implementation. The implementation plan will demonstrate an outcome-based proposal to provide business capabilities through infrastructure with a risk-mitigated project plan.

- **Basic Hardware Installation**

  Lenovo experts can seamlessly manage the physical installation of your server, storage, or networking hardware. Working at a time convenient for you (business hours or off shift), the technician will unpack and inspect the systems on your site, install options, mount in a rack cabinet, connect to power and network, check and update firmware to the latest levels, verify operation, and dispose of the packaging, allowing your team to focus on other priorities.

- **Deployment Services**

  When investing in new IT infrastructures, you need to ensure your business will see quick time to value with little to no disruption. Lenovo deployments are designed by development and engineering teams who know our Products & Solutions better than anyone else, and our technicians own the process from delivery to completion. Lenovo will conduct remote preparation and planning, configure & integrate systems, validate systems, verify and update appliance firmware, train on administrative tasks, and provide post-deployment documentation. Customer’s IT teams leverage our skills to enable IT staff to transform with higher level roles and tasks.

- **Integration, Migration, and Expansion Services**

  Move existing physical & virtual workloads easily, or determine technical requirements to support increased workloads while maximizing performance. Includes tuning, validation, and documenting ongoing run processes. Leverage migration assessment planning documents to perform necessary migrations.

Regulatory compliance

The SR850 V2 server conforms to the following standards:

- Energy Star 3.0
- FCC: Verified to comply with Part 15 of the FCC Rules, Class A
- Canada ICES-003, issue 6, Class A
- UL/IEC 62368-1
- CAN/CSA-C22.2 No. 62368-1
- NOM-019
- Argentina IEC 62368-1
- Japan VCCI, Class A
- Australia/New Zealand AS/NZS CISPR 32, Class A; AS/NZS 60950.1; AS/NZS 62368.1:2014
- IEC 60950-1 & IEC 62368-1 (CB Certificate and CB Test Report)
- China CCC (GB4943.1), GB9254 Class A, GB17625.1
- Taiwan BSMI CNS13438, Class A; CNS14336-1; section 5 of CNS15663
- Korea KN32, Class A; KN35
- Russia, Belorussia and Kazakhstan, EAC: TP TC 004/2011 (for Safety); TP TC 020/2011 (for EMC); TP EAC 037/2016 (for RoHS)
- CE Mark (EN55032 Class A, EN60950-1, EN62368-1, EN55024, EN55035, EN61000-3-2, (EU) 2019/424, EN 50581-1 and EN61000-3-3)
- CISPR 32, Class A
- GS (EN62368-1, EK1-ITB2000, AfPS GS 01 PAK Par. 3.1)
- India BIS certification
- RoHS

External drive enclosures

The server supports attachment to external drive enclosures using a RAID controller with external ports or a SAS host bus adapter. Adapters supported by the server are listed in the SAS adapters for external storage section.

Note: Information provided in this section is for ordering reference purposes only. For the operating system and adapter support details, refer to the interoperability matrix for a particular storage enclosure that can be found on the Lenovo Data Center Support web site:
http://datacentersupport.lenovo.com

Table 54. External drive enclosures

Model	Description
4587HC1	Lenovo Storage D1212 Disk Expansion Enclosure (2U enclosure wth 12x LFF drive bays)
4587HC2	Lenovo Storage D1224 Disk Expansion Enclosure (2U enclosure wth 24x SFF drive bays)
6413HC1	Lenovo Storage D3284 High Density Expansion Enclosure (5U enclosure wth 84x LFF drive bays)
7DAHCTO1WW	Lenovo ThinkSystem D4390 Direct Attached Storage (4U enclosure wth 90x LFF drive bays)

For details about supported drives, adapters, and cables, see the following Lenovo Press Product Guides:

- Lenovo Storage D1212 and D1224
  http://lenovopress.lenovo.com/lp0512
- Lenovo Storage D3284
  http://lenovopress.lenovo.com/lp0513
- Lenovo ThinkSystem D4390
  https://lenovopress.lenovo.com/lp1681

External storage systems

Lenovo offers the ThinkSystem DE Series and ThinkSystem DM Series external storage systems for high-performance storage. See the DE Series and DM Series product guides for specific controller models, expansion enclosures and configuration options:

- ThinkSystem DE Series Storage
  https://lenovopress.com/storage/thinksystem/de-series#rt=product-guide
- ThinkSystem DM Series Storage
  https://lenovopress.com/storage/thinksystem/dm-series#rt=product-guide

External backup units

The server supports both USB-attached RDX backup units and SAS-attached tape drives.

The following table lists the available external SAS tape backup options.

Tip: Verify the end-to-end support of an IBM tape backup solution through the IBM System Storage Interoperation Center (SSIC): http://www.ibm.com/systems/support/storage/ssic

Table 55. External SAS backup options

Part number	Description
External SAS tape backup drives	
6160S7E	IBM TS2270 Tape Drive Model H7S
6160S8E	IBM TS2280 Tape Drive Model H8S
6160S9E	IBM TS2290 Tape Drive Model H9S
External SAS tape backup autoloaders	
6171S7R	IBM TS2900 Tape Autoloader w/LTO7 HH SAS
6171S8R	IBM TS2900 Tape Autoloader w/LTO8 HH SAS
6171S9R	IBM TS2900 Tape Autoloader w/LTO9 HH SAS
External tape backup libraries	
6741A1F	IBM TS4300 3U Tape Library-Base Unit
SAS backup drives for TS4300 Tape Library	
01KP937	LTO 7 HH SAS Drive
01KP953	LTO 8 HH SAS Drive
02JH836	LTO 9 HH SAS Drive

For more information, see the list of Product Guides in the Backup units category:
https://lenovopress.com/servers/options/backup

The following table lists the external RDX backup options available.

Table 56. External RDX dock and cartridges

Part number	Feature code	Description
External RDX docks		
4T27A10725	B32R	ThinkSystem RDX External USB 3.0 Dock (No cartridge included with the drive)
Cartridges		
7TP7A01601	AVF8	ThinkSystem RDX 500GB Cartridge
7TP7A01602	AVF1	ThinkSystem RDX 1TB Cartridge
7TP7A01603	AVF0	ThinkSystem RDX 2TB Cartridge
7TP7A04318	AXD1	ThinkSystem RDX 4TB Cartridge

For more information, see the Lenovo RDX USB 3.0 Disk Backup Solution product guide:
https://lenovopress.com/tips0894-rdx-usb-30

Fibre Channel SAN switches

Lenovo offers the ThinkSystem DB Series of Fibre Channel SAN switches for high-performance storage expansion. See the DB Series product guides for models and configuration options:

- ThinkSystem DB Series SAN Switches:
  https://lenovopress.com/storage/switches/rack#rt=product-guide

Uninterruptible power supply units

The following table lists the uninterruptible power supply (UPS) units that are offered by Lenovo.

Table 57. Uninterruptible power supply units

Part number	Description
55941AX	RT1.5kVA 2U Rack or Tower UPS (100-125VAC)
55941KX	RT1.5kVA 2U Rack or Tower UPS (200-240VAC)
55942AX	RT2.2kVA 2U Rack or Tower UPS (100-125VAC)
55942KX	RT2.2kVA 2U Rack or Tower UPS (200-240VAC)
55943AX	RT3kVA 2U Rack or Tower UPS (100-125VAC)
55943KX	RT3kVA 2U Rack or Tower UPS (200-240VAC)
55945KX	RT5kVA 3U Rack or Tower UPS (200-240VAC)
55946KX	RT6kVA 3U Rack or Tower UPS (200-240VAC)
55948KX	RT8kVA 6U Rack or Tower UPS (200-240VAC)
55949KX	RT11kVA 6U Rack or Tower UPS (200-240VAC)
55948PX	RT8kVA 6U 3:1 Phase Rack or Tower UPS (380-415VAC)
55949PX	RT11kVA 6U 3:1 Phase Rack or Tower UPS (380-415VAC)
55943KT†	ThinkSystem RT3kVA 2U Standard UPS (200-230VAC) (2x C13 10A, 2x GB 10A, 1x C19 16A outlets)
55943LT†	ThinkSystem RT3kVA 2U Long Backup UPS (200-230VAC) (2x C13 10A, 2x GB 10A, 1x C19 16A outlets)
55946KT†	ThinkSystem RT6kVA 5U UPS (200-230VAC) (2x C13 10A outlets, 1x Terminal Block output)
5594XKT†	ThinkSystem RT10kVA 5U UPS (200-230VAC) (2x C13 10A outlets, 1x Terminal Block output)

† Only available in China and the Asia Pacific market.

For more information, see the list of Product Guides in the UPS category:
https://lenovopress.com/servers/options/ups

Power distribution units

The following table lists the power distribution units (PDUs) that are offered by Lenovo.

Table 58. Power distribution units

Part number	Feature code	Description	ANZ	ASEAN	Brazil	EET	MEA	RUCIS	WE	HTK	INDIA	JAPAN	LA	NA	PRC
0U Basic PDUs															
00YJ776	ATZY	0U 36 C13/6 C19 24A 1 Phase PDU	N	Y	Y	N	N	N	N	N	N	Y	Y	Y	N
00YJ777	ATZZ	0U 36 C13/6 C19 32A 1 Phase PDU	Y	Y	N	Y	Y	Y	Y	Y	Y	N	N	Y	Y
0U Switched and Monitored PDUs															
00YJ783	AU04	0U 12 C13/12 C19 Switched and Monitored 48A 3 Phase PDU	N	N	Y	N	N	N	Y	N	N	Y	Y	Y	N
00YJ781	AU03	0U 20 C13/4 C19 Switched and Monitored 24A 1 Phase PDU	N	N	Y	N	Y	N	Y	N	N	Y	Y	Y	N
1U Switched and Monitored PDUs															

Part number	Feature code	Description	ANZ	ASEAN	Brazil	EET	MEA	RUCIS	WE	HTK	INDIA	JAPAN	LA	NA	PRC
4PU7A81117	BNDV	1U 18 C19/C13 switched and monitored 48A 3P WYE PDU - ETL	N	N	N	N	N	N	N	N	N	N	N	Y	N
4PU7A77467	BLC4	1U 18 C19/C13 Switched and Monitored 80A 3P Delta PDU	N	N	N	N	N	N	N	N	N	Y	N	Y	N
4PU7A77469	BLC6	1U 12 C19/C13 switched and monitored 60A 3P Delta PDU	N	N	N	N	N	N	N	N	N	N	N	Y	N
4PU7A77468	BLC5	1U 12 C19/C13 switched and monitored 32A 3P WYE PDU	Y	Y	Y	Y	Y	Y	Y	Y	Y	N	Y	Y	Y
4PU7A81118	BNDW	1U 18 C19/C13 switched and monitored 48A 3P WYE PDU - CE	Y	Y	Y	Y	Y	Y	Y	Y	Y	N	Y	N	Y
1U Ultra Density Enterprise PDUs (9x IEC 320 C13 + 3x IEC 320 C19 outlets)															
71763NU	6051	Ultra Density Enterprise C19/C13 PDU 60A/208V/3PH	N	N	Y	N	N	N	N	N	N	Y	Y	Y	N
71762NX	6091	Ultra Density Enterprise C19/C13 PDU Module	Y	Y	Y	Y	Y	Y	Y	Y	Y	Y	Y	Y	Y
1U C13 Enterprise PDUs (12x IEC 320 C13 outlets)															
39Y8941	6010	DPI C13 Enterprise PDU Module (WW)	Y	Y	Y	Y	Y	Y	Y	Y	Y	Y	Y	Y	Y
1U Front-end PDUs (3x IEC 320 C19 outlets)															
39Y8938	6002	DPI Single-phase 30A/120V Front-end PDU (US)	Y	Y	Y	Y	Y	Y	Y	Y	Y	Y	Y	Y	Y
39Y8939	6003	DPI Single-phase 30A/208V Front-end PDU (US)	Y	Y	Y	Y	Y	Y	Y	Y	Y	Y	Y	Y	Y
39Y8934	6005	DPI Single-phase 32A/230V Front-end PDU (International)	Y	Y	Y	Y	Y	Y	Y	Y	Y	Y	Y	Y	Y
39Y8940	6004	DPI Single-phase 60A/208V Front-end PDU (US)	Y	N	Y	Y	Y	Y	Y	N	N	Y	Y	Y	N
39Y8935	6006	DPI Single-phase 63A/230V Front-end PDU (International)	Y	Y	Y	Y	Y	Y	Y	Y	Y	Y	Y	Y	Y
1U NEMA PDUs (6x NEMA 5-15R outlets)															
39Y8905	5900	DPI 100-127V NEMA PDU	Y	Y	Y	Y	Y	Y	Y	Y	Y	Y	Y	Y	Y
Line cords for 1U PDUs that ship without a line cord															
40K9611	6504	4.3m, 32A/380-415V, EPDU/IEC 309 3P+N+G 3ph wye (non-US) Line Cord	Y	Y	Y	Y	Y	Y	Y	Y	Y	Y	Y	Y	Y
40K9612	6502	4.3m, 32A/230V, EPDU to IEC 309 P+N+G (non-US) Line Cord	Y	Y	Y	Y	Y	Y	Y	Y	Y	Y	Y	Y	Y
40K9613	6503	4.3m, 63A/230V, EPDU to IEC 309 P+N+G (non-US) Line Cord	Y	Y	Y	Y	Y	Y	Y	Y	Y	Y	Y	Y	Y
40K9614	6500	4.3m, 30A/208V, EPDU to NEMA L6-30P (US) Line Cord	Y	Y	Y	Y	Y	Y	Y	Y	Y	Y	Y	Y	Y
40K9615	6501	4.3m, 60A/208V, EPDU to IEC 309 2P+G (US) Line Cord	N	N	Y	N	N	N	Y	N	N	Y	Y	Y	N
40K9617	6505	4.3m, 32A/230V, Souriau UTG Female to AS/NZ 3112 (Aus/NZ) Line Cord	Y	Y	Y	Y	Y	Y	Y	Y	Y	Y	Y	Y	Y

Part number	Feature code	Description	ANZ	ASEAN	Brazil	EET	MEA	RUCIS	WE	HTK	INDIA	JAPAN	LA	NA	PRC
40K9618	6506	4.3m, 32A/250V, Souriau UTG Female to KSC 8305 (S. Korea) Line Cord	Y	Y	Y	Y	Y	Y	Y	Y	Y	Y	Y	Y	Y

For more information, see the Lenovo Press documents in the PDU category:
https://lenovopress.com/servers/options/pdu

Rack cabinets

The following table lists the supported rack cabinets.

Table 59. Rack cabinets

Part number	Description
93072RX	25U Standard Rack (1000mm)
93072PX	25U Static S2 Standard Rack (1000mm)
7D6DA007WW	ThinkSystem 42U Onyx Primary Heavy Duty Rack Cabinet (1200mm)
7D6DA008WW	ThinkSystem 42U Pearl Primary Heavy Duty Rack Cabinet (1200mm)
93604PX	42U 1200mm Deep Dynamic Rack
93614PX	42U 1200mm Deep Static Rack
93634PX	42U 1100mm Dynamic Rack
93634EX	42U 1100mm Dynamic Expansion Rack
93074RX	42U Standard Rack (1000mm)
7D6EA009WW	ThinkSystem 48U Onyx Primary Heavy Duty Rack Cabinet (1200mm)
7D6EA00AWW	ThinkSystem 48U Pearl Primary Heavy Duty Rack Cabinet (1200mm)

For specifications about these racks, see the Lenovo Rack Cabinet Reference, available from:
https://lenovopress.com/lp1287-lenovo-rack-cabinet-reference

For more information, see the list of Product Guides in the Rack cabinets category:
https://lenovopress.com/servers/options/racks

Installation restriction - 1100mm racks and the use of the CMA : The SR850 V2 with the cable management arm (CMA) attached is supported in 1100mm rack cabinets, however there is insufficient clearance to route any cables between the CMA and the rear door. As a result, if you require cable access through the lower cable access panel of the rack and you have an SR850 V2 installed at the bottom position of the rack, then it is not supported to use a CMA with that server. Similarly, if you require cable access through the upper cable access panel of the rack and you have an SR850 V2 installed at the top position of the rack, then it is not supported to use a CMA with that server. This limitation does not exist with rack cabinets with 1200mm depth.

KVM console options

The following table lists the supported KVM consoles.

Table 60. KVM console

Part number	Description
4XF7A84188	ThinkSystem 18.5" LCD Console (with US English keyboard)

The following table lists the available KVM switches and the options that are supported with them.

Table 62. KVM switches and options

Part number	Description
KVM Console switches	
1754D2X	Global 4x2x32 Console Manager (GCM32)
1754D1X	Global 2x2x16 Console Manager (GCM16)
1754A2X	Local 2x16 Console Manager (LCM16)
1754A1X	Local 1x8 Console Manager (LCM8)
Cables for GCM and LCM Console switches	
46M5383	Virtual Media Conversion Option Gen2 (VCO2)
46M5382	Serial Conversion Option (SCO)

For more information, see the list of Product Guides in the KVM Switches and Consoles category:
http://lenovopress.com/servers/options/kvm

Lenovo Financial Services

Lenovo Financial Services reinforces Lenovo's commitment to deliver pioneering products and services that are recognized for their quality, excellence, and trustworthiness. Lenovo Financial Services offers financing solutions and services that complement your technology solution anywhere in the world.

We are dedicated to delivering a positive finance experience for customers like you who want to maximize your purchase power by obtaining the technology you need today, protect against technology obsolescence, and preserve your capital for other uses.

We work with businesses, non-profit organizations, governments and educational institutions to finance their entire technology solution. We focus on making it easy to do business with us. Our highly experienced team of finance professionals operates in a work culture that emphasizes the importance of providing outstanding customer service. Our systems, processes and flexible policies support our goal of providing customers with a positive experience.

We finance your entire solution. Unlike others, we allow you to bundle everything you need from hardware and software to service contracts, installation costs, training fees, and sales tax. If you decide weeks or months later to add to your solution, we can consolidate everything into a single invoice.

Our Premier Client services provide large accounts with special handling services to ensure these complex transactions are serviced properly. As a premier client, you have a dedicated finance specialist who manages your account through its life, from first invoice through asset return or purchase. This specialist develops an in-depth understanding of your invoice and payment requirements. For you, this dedication provides a high-quality, easy, and positive financing experience.

For your region-specific offers, please ask your Lenovo sales representative or your technology provider about the use of Lenovo Financial Services. For more information, see the following Lenovo website:

https://www.lenovo.com/us/en/landingpage/lenovo-financial-services/

Related publications and links

For more information, see these resources:

- Lenovo ThinkSystem SR850 V2 product page:
  https://www.lenovo.com/us/en/data-center/servers/mission-critical/ThinkSystem-SR850-V2-Server/p/77XX7HS85V2
- Interactive 3D Tour of the ThinkSystem SR850 V2:
  https://lenovopress.com/LP1303
- ThinkSystem SR850 V2 drivers and support
  http://datacentersupport.lenovo.com/products/servers/thinksystem/sr850-v2/7d32/downloads
- Lenovo Hardware Installation & Removal Videos on the SR850 V2:
  - YouTube: https://www.youtube.com/playlist?list=PLYV5R7hVcs-CFHpkdjqPOfKAtkwRWziaT
  - Youku: http://list.youku.com/albumlist/show/id_54460896.html
- Lenovo ThinkSystem SR850 V2 product publications:
  http://thinksystem.lenovofiles.com/help/index.jsp
  - Quick Start
  - Rack Installation Guide
  - Setup Guide
  - Hardware Maintenance Manual
  - Messages and Codes Reference
  - Memory Population Reference
- ServerProven hardware compatibility:
  http://www.lenovo.com/us/en/serverproven

Related product families

Product families related to this document are the following:

- 4-Socket Rack Servers
- Mission-Critical Rack Servers
- ThinkSystem SR850 V2 Server

Notices

Lenovo may not offer the products, services, or features discussed in this document in all countries. Consult your local Lenovo representative for information on the products and services currently available in your area. Any reference to a Lenovo product, program, or service is not intended to state or imply that only that Lenovo product, program, or service may be used. Any functionally equivalent product, program, or service that does not infringe any Lenovo intellectual property right may be used instead. However, it is the user's responsibility to evaluate and verify the operation of any other product, program, or service. Lenovo may have patents or pending patent applications covering subject matter described in this document. The furnishing of this document does not give you any license to these patents. You can send license inquiries, in writing, to:

Lenovo (United States), Inc.
8001 Development Drive
Morrisville, NC 27560
U.S.A.
Attention: Lenovo Director of Licensing

LENOVO PROVIDES THIS PUBLICATION ”AS IS” WITHOUT WARRANTY OF ANY KIND, EITHER EXPRESS OR IMPLIED, INCLUDING, BUT NOT LIMITED TO, THE IMPLIED WARRANTIES OF NON-INFRINGEMENT, MERCHANTABILITY OR FITNESS FOR A PARTICULAR PURPOSE. Some jurisdictions do not allow disclaimer of express or implied warranties in certain transactions, therefore, this statement may not apply to you.

This information could include technical inaccuracies or typographical errors. Changes are periodically made to the information herein; these changes will be incorporated in new editions of the publication. Lenovo may make improvements and/or changes in the product(s) and/or the program(s) described in this publication at any time without notice.

The products described in this document are not intended for use in implantation or other life support applications where malfunction may result in injury or death to persons. The information contained in this document does not affect or change Lenovo product specifications or warranties. Nothing in this document shall operate as an express or implied license or indemnity under the intellectual property rights of Lenovo or third parties. All information contained in this document was obtained in specific environments and is presented as an illustration. The result obtained in other operating environments may vary. Lenovo may use or distribute any of the information you supply in any way it believes appropriate without incurring any obligation to you.

Any references in this publication to non-Lenovo Web sites are provided for convenience only and do not in any manner serve as an endorsement of those Web sites. The materials at those Web sites are not part of the materials for this Lenovo product, and use of those Web sites is at your own risk. Any performance data contained herein was determined in a controlled environment. Therefore, the result obtained in other operating environments may vary significantly. Some measurements may have been made on development-level systems and there is no guarantee that these measurements will be the same on generally available systems. Furthermore, some measurements may have been estimated through extrapolation. Actual results may vary. Users of this document should verify the applicable data for their specific environment.

© Copyright Lenovo 2023. All rights reserved.

This document, LP1301, was created or updated on August 8, 2023.

Send us your comments in one of the following ways:

- Use the online Contact us review form found at:
  https://lenovopress.lenovo.com/LP1301
- Send your comments in an e-mail to:
  comments@lenovopress.com

This document is available online at https://lenovopress.lenovo.com/LP1301.

Trademarks

Lenovo and the Lenovo logo are trademarks or registered trademarks of Lenovo in the United States, other countries, or both. A current list of Lenovo trademarks is available on the Web at https://www.lenovo.com/us/en/legal/copytrade/.

The following terms are trademarks of Lenovo in the United States, other countries, or both:
Lenovo®
AnyBay®
Bootable Media Creator
Flex System
Lenovo Services
ServerProven®
System x®
ThinkAgile®
ThinkShield®
ThinkServer®
ThinkSystem®
TopSeller
TruDDR4
UpdateXpress System Packs
XClarity®

The following terms are trademarks of other companies:

Intel®, Intel Optane™, and Xeon® are trademarks of Intel Corporation or its subsidiaries.

Linux® is the trademark of Linus Torvalds in the U.S. and other countries.

ActiveX®, Hyper-V®, Microsoft®, PowerShell, Windows PowerShell®, Windows Server®, and Windows® are trademarks of Microsoft Corporation in the United States, other countries, or both.

SPECpower® is a trademark of the Standard Performance Evaluation Corporation (SPEC).

Other company, product, or service names may be trademarks or service marks of others.