Lenovo ThinkSystem SR630 V2 Server
Product Guide

The Lenovo ThinkSystem SR630 V2 is an ideal 2-socket 1U rack server for small businesses up to large enterprises that need industry-leading reliability, management, and security, as well as maximizing performance and flexibility for future growth. The SR630 V2 is based on the 3rd generation Intel Xeon Scalable processor family (formerly codenamed "Ice Lake") and the Intel Optane Persistent Memory 200 Series.

The SR630 V2 is designed to handle a wide range of workloads, such as databases, virtualization and cloud computing, infrastructure security, systems management, enterprise applications, collaboration/email, streaming media, web, and HPC.



Figure 1. Lenovo ThinkSystem SR630 V2

Did you know?

The SR630 V2 server has been designed to take advantage of the features of the 3rd generation Intel Xeon Scalable processors, such as the full performance of 270W 40-core processors, support for 3200 MHz memory and PCIe Gen 4.0 support. The server also offers onboard NVMe PCIe ports that allow direct connections to 12x NVMe SSDs, which results in faster access to store and access data.

Key features

Combining performance and flexibility, the SR630 V2 server is a great choice for enterprises of all sizes. The server offers a broad selection of drive and slot configurations and offers numerous high performance features. Outstanding reliability, availability, and serviceability (RAS) and high-efficiency design can improve your business environment and can help save operational costs.

Scalability and performance

The ThinkSystem SR630 V2 offers numerous features to boost performance, improve scalability and reduce costs:

- Supports one or two third-generation Intel Xeon Processor Scalable processors
  - Up to 40 cores and 80 threads
  - Core speeds of up to 3.6 GHz
  - TDP ratings of up to 270W
- Support for up to 32 TruDDR4 memory DIMMs operating at up to 3200 MHz means you have the fastest available memory subsystem.
- Supports configurations of 2 DIMMs per channel to operate at the 3200 MHz rated speed of the memory DIMMs.
- Using 256GB 3DS RDIMMs, the server supports up to 8TB of system memory.
- Supports the new Intel Optane Persistent Memory 200 Series for advanced in-memory database applications, dense-virtualization; up to 16 PMem Modules can be installed in conjunction with regular system memory.
- Supports up to three single-width GPUs, each up to 75W for substantial processing power in a 1U system.
- Supports up to 12x 2.5-inch hot-swap drive bays, by using combinations of front-accessible (up to 10 bays) and rear-accessible (2 bays).
- Supports four 3.5-inch drive bays for lower-cost high-capacity HDD storage.
- Supports 16x EDSFF NVMe drives, a new form factor for high-density and high-performance storage.
- Supports up to 12x NVMe drives without oversubscription of PCIe lanes (1:1 connectivity) and without the need for additional NVMe adapters. The use of NVMe drives maximizes drive I/O performance, in terms of throughput and latency.
- Supports 12x SATA drives using the onboard SATA controller (no additional adapter needed), enabling lower cost, high capacity storage solution.
- Supports 12x SAS drives using a variety of 12Gb RAID controllers and SAS HBAs.
- Supports high-speed RAID controllers from Broadcom providing 12 Gb SAS connectivity to the drive backplanes. A variety of PCIe 3.0 and PCIe 4.0 RAID adapters are available.
- Supports up to two externally accessible 7mm hot-swap drives with RAID functionality for operating system boot functions.
- Supports M.2 drives for convenient operating system boot functions. Available M.2 adapters support either one M.2 drive or two M.2 drives in a RAID 1 configuration for performance and reliability.
- The server has a dedicated industry-standard OCP 3.0 small form factor (SFF) slot, with a PCIe 4.0 x16 interface, supporting a variety of Ethernet network adapters. A simple-swap mechanism with a thumbscrew and pull-tab enables tool-less installation and removal of the adapter. The adapter supports shared BMC network sideband connectivity to enable out-of-band systems management.
- The server offers PCI Express 4.0 I/O expansion capabilities that doubles the theoretical maximum bandwidth of PCIe 3.0 (16GT/s in each direction for PCIe 4.0, compared to 8 GT/s with PCIe 3.0). A PCIe 4.0 x16 slot provides 64 GB/s bandwidth, enough to support a 200GbE network connection.
- The server offers up to three PCIe 4.0 slots, all with rear access, plus an internal bay for a cabled RAID adapter or HBA, plus a slot dedicated to the OCP adapter.

Availability and serviceability

The SR630 V2 provides many features to simplify serviceability and increase system uptime:

- Designed to run 24 hours a day, 7 days a week
- The server offers Single Device Data Correction (SDDC, also known as Chipkill), Adaptive Double-Device Data Correction (ADDDC, also known as Redundant Bit Steering or RBS), and memory mirroring for redundancy in the event of a non-correctable memory failure.
- The server offers hot-swap drives, supporting RAID redundancy for data protection and greater system uptime.
- Available M.2 RAID boot adapters support RAID-1 which can enable two SATA or two NVMe M.2 drives to be configured as a redundant pair.
- The server has up to two hot-swap redundant power supplies and up to eight hot-swap redundant fans to provide availability for business-critical applications.
- The light path diagnostics feature uses LEDs to lead the technician to failed (or failing) components, which simplifies servicing, speeds up problem resolution, and helps improve system availability.
- Solid-state drives (SSDs) offer more reliability and performance than traditional mechanical HDDs for greater uptime.
- Proactive Platform Alerts (including PFA and SMART alerts): Processors, voltage regulators, memory, internal storage (SAS/SATA HDDs and SSDs, NVMe SSDs, M.2 storage, flash storage adapters), fans, power supplies, RAID controllers, server ambient and subcomponent temperatures. Alerts can be surfaced through the XClarity Controller to managers such as Lenovo XClarity Administrator, VMware vCenter, and Microsoft System Center. These proactive alerts let you take appropriate actions in advance of possible failure, thereby increasing server uptime and application availability.
- The built-in XClarity Controller continuously monitors system parameters, triggers alerts, and performs recovery actions in case of failures to minimize downtime.
- Built-in diagnostics in UEFI, using Lenovo XClarity Provisioning Manager, speed up troubleshooting tasks to reduce service time.
- Lenovo XClarity Provisioning Manager supports diagnostics and can save service data to a USB key drive or remote CIFS share folder for troubleshooting and reduce service time.
- Auto restart in the event of a momentary loss of AC power (based on power policy setting in the XClarity Controller service processor)
- Offers a diagnostics port on the front of the server to allow you to attach an external diagnostics handset for enhanced systems management capabilities.
- Support for the XClarity Administrator Mobile app running on a supported smartphone or tablet and connected to the server through the service-enabled USB port, enables additional local systems management functions.
- Three-year or one-year customer-replaceable unit and onsite limited warranty (varies by geography), 9 x 5 next business day. Optional service upgrades are available.

Manageability and security

Systems management features simplify local and remote management of the SR630 V2:

- The server includes an XClarity Controller (XCC) to monitor server availability. Optional upgrade to XCC Advanced to provide remote control (keyboard video mouse) functions. Optional upgrade to XCC Enterprise enables the additional support for the mounting of remote media files (ISO and IMG image files), boot capture, and power capping.
- Lenovo XClarity Administrator offers comprehensive hardware management tools that help to increase uptime, reduce costs and improve productivity through advanced server management capabilities.
- UEFI-based Lenovo XClarity Provisioning Manager, accessible from F1 during boot, provides system inventory information, graphical UEFI Setup, platform update function, RAID Setup wizard, operating system installation function, and diagnostic functions.

- Support for Lenovo XClarity Energy Manager which captures real-time power and temperature data from the server and provides automated controls to lower energy costs.
- An integrated industry-standard Unified Extensible Firmware Interface (UEFI) enables improved setup, configuration, and updates, and simplifies error handling.
- Support for industry standard management protocols, IPMI 2.0, SNMP 3.0, Redfish REST API, serial console via IPMI
- An integrated hardware Trusted Platform Module (TPM) supporting TPM 2.0 enables advanced cryptographic functionality, such as digital signatures and remote attestation.
- Administrator and power-on passwords help protect from unauthorized access to the server.
- Supports Secure Boot to ensure only a digitally signed operating system can be used. Supported with HDDs and SSDs, as well as 7mm and M.2 drives.
- Industry-standard Advanced Encryption Standard (AES) NI support for faster, stronger encryption.
- Intel Execute Disable Bit functionality can prevent certain classes of malicious buffer overflow attacks when combined with a supported operating system.
- Intel Trusted Execution Technology provides enhanced security through hardware-based resistance to malicious software attacks, allowing an application to run in its own isolated space, protected from all other software running on a system.
- Additional physical security features are an available chassis intrusion switch and available lockable front bezel.

Energy efficiency

The SR630 V2 offers the following energy-efficiency features to save energy, reduce operational costs, and increase energy availability:

- Energy-efficient system board components help lower operational costs.
- High-efficiency power supplies with 80 PLUS Platinum and Titanium certifications
- Solid-state drives (SSDs) consume as much as 80% less power than traditional spinning 2.5-inch HDDs.
- The server uses hexagonal ventilation holes, which can be grouped more densely than round holes, providing more efficient airflow through the system and thus keeping your system cooler.
- Optional Lenovo XClarity Energy Manager provides advanced data center power notification, analysis, and policy-based management to help achieve lower heat output and reduced cooling needs.

Comparing the SR630 V2 to the SR630

The ThinkSystem SR630 V2 improves on the previous generation SR630, as summarized in the following table.

Table 1. Comparing the SR630 V2 to the previous generation SR630

Feature	SR630	SR630 V2	Benefits
Processor	• 2x 2nd Gen Intel Xeon Scalable Processor • Up to 28 cores & 205W per CPU • 48x PCIe 3.0 lanes per CPU	• 2x 3rd Gen Intel Xeon Scalable Processor • Up to 40 cores & 270W per CPU • 64x PCIe 4.0 lanes per CPU	• The latest high-performance processors from Intel • Greater computing performance with top bin CPUs • Faster PCIe connectivity • More PCIe lanes means more NVMe drives
Memory	• 6 channels per CPU • 24x TruDDR4 (R/LR/3DS) 2933 MHz DIMMs • Up to 2DPC @ 2933MHz • Max 3 TB with 24x 128 GB DIMMs • Intel Optane PMem 100 Series	• 8 channels per CPU • 32x TruDDR4 (RDIMM/3DS) 3200 MHz DIMMs • Up to 1DPC & 2DPC @ 3200MHz • Max 8 TB with 32x 256 GB DIMMs • Intel Optane PMem 200 Series	• Faster memory • Increased capacity • Support for new generation persistent memory
Disk	• Up to 4x 3.5-inch or 10x 2.5-inch front bays • 2x 2.5-inch rear SAS/SATA • Up to 10x 2.5-inch NVMe • 2x Internal M.2 with optional RAID 1	• Up to 4x 3.5-inch or 10x 2.5-inch or 16x EDSFF front bays • 2x 2.5-inch rear SAS/SATA/NVMe • Up to 12x 2.5-inch NVMe • 2x 7mm hot-swap rear SAS/SATA/NVMe for boot • 2x Internal M.2 with optional RAID 1	• More configuration choices • New EDSFF hot-swap drives • New 7mm HS drives for OS boot • New rear NVMe • Higher maximum capacity • Support mixing 2.5"/3.5" HDD and NVMe drives
RAID	• 12Gb SAS/SATA/RAID support • PCIe 3.0 adapters • Range of 8-, and 16-port RAID adapters • 8- and 16-port HBAs • 4x Onboard NVMe ports • NVMe switch adapter support	• 12Gb SAS/SATA/RAID support • PCIe 3.0 and PCIe 4.0 adapters • Onboard SATA support with RAID • Onboard VROC NVMe support with RAID • Wider range of 8- and 16-port RAID adapters • 8- and 16-port HBAs • 12x Onboard NVMe ports • NVMe Retimer adapters for 16x NVMe	• Support for onboard SATA • Intel VROC for onboard NVMe RAID • Featuring industry's latest PCIe Gen4 based RAID adapters • More onboard ports and NVMe Retimers lower the cost of NVMe support

Feature	SR630	SR630 V2	Benefits
Networking	• Selectable LOM, 1GbE or 10GbE • Optional ML2 and PCIe adapters • 1GbE dedicated management port	• Selectable OCP 3.0, 1GbE, 10GbE or 25GbE • Optional PCIe adapters • 1GbE dedicated management port	• Improved performance & flexibility • OCP slot supports 25GbE
PCIe	• Up to 3x PCIe 3.0 slots • Supports 1x 75W GPU • 1x internal RAID slot	• Up to 3x PCIe 4.0 slots • Support 3x 75W GPUs • 1x internal bay for cabled RAID/HBA	• More GPU support • New PCIe 4.0 support
Management and security	• XClarity Controller with upgrades • Full XClarity software suite including XClarity Administrator • Optional lockable front bezel	• XClarity Controller with upgrades • Full XClarity software suite including XClarity Administrator • Optional lockable front bezel • Optional intrusion switch • Support for External Diagnostics Handset • Platform Firmware Resiliency (PFR) hardware Root of Trust	• Common management tools with prior generation • External Diagnostics Handset with LCD panel offers quick access to system status, firmware, network, and health information • Platform Firmware Resiliency is an advanced security solution with a silicon-based to guard against corruption and unauthorized firmware updates
Power supplies	• 2x Hot-swap PSUs up to 1100W, Platinum • 750W Hot-swap Titanium PSU • -48V DC power for Telco • 240V HVDC support in China	• 2x Hot-swap PSUs up to 1800W, Platinum • 750W Hot-swap Titanium PSU • -48V DC power for Telco • 240V HVDC support in China	• Expanded power supply portfolio for exact configuration required and sharing with rest of the 2-socket/4-socket ThinkSystem V2 servers

Components and connectors

There are four different base drive configurations available for the SR630 V2, as shown in the following figure.

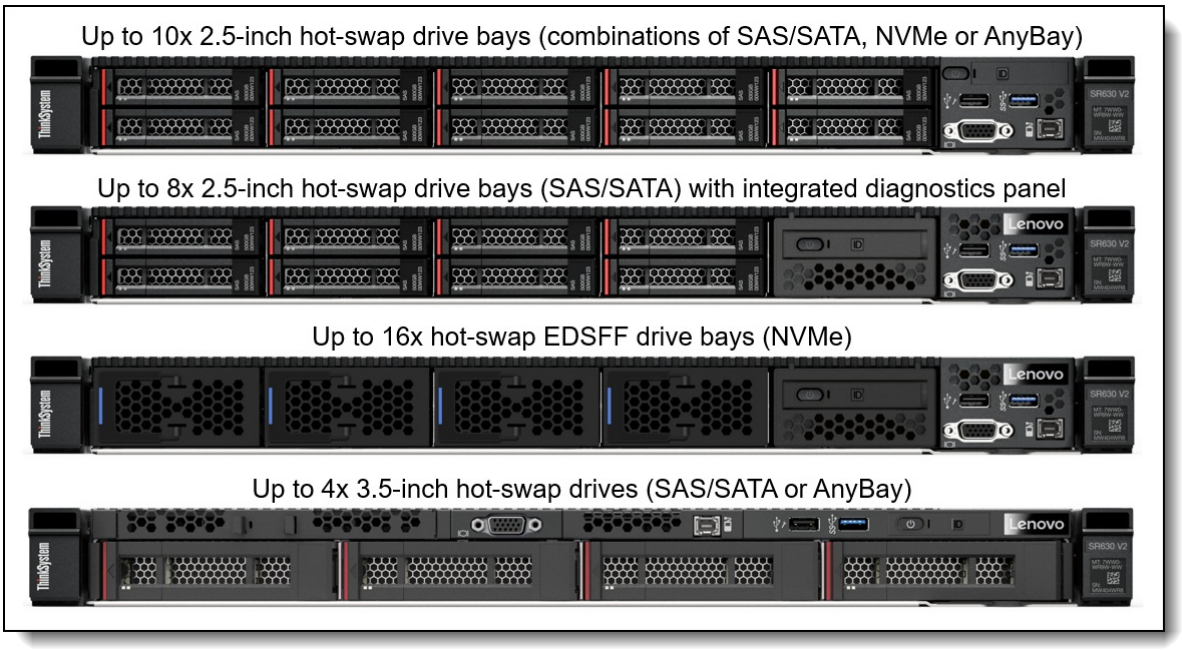

Figure 2. Front configurations of the Lenovo ThinkSystem SR630 V2

The following figure shows the components on the front of the server.

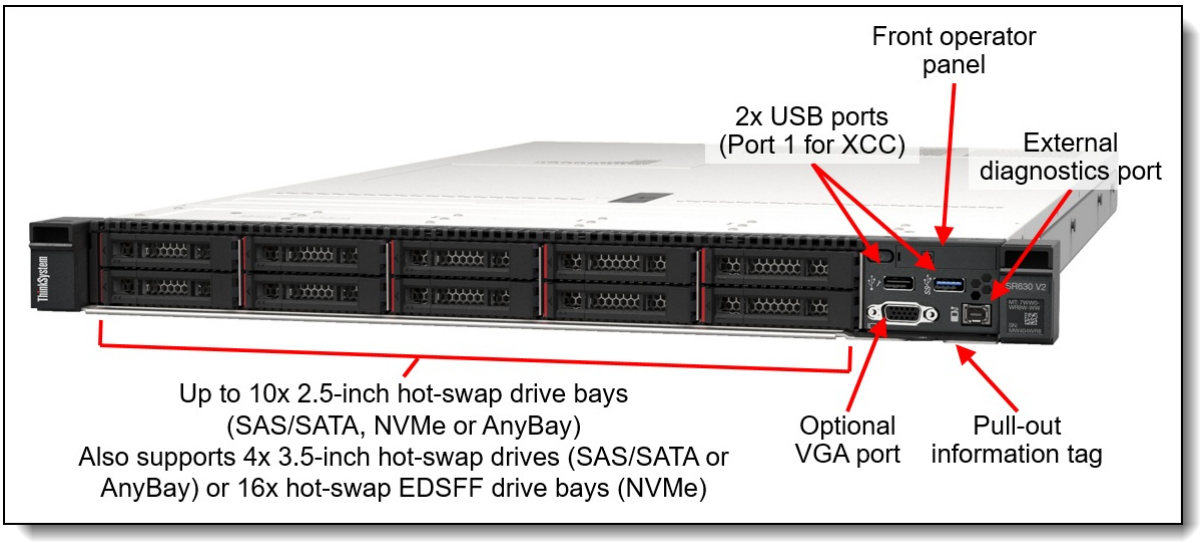

Figure 3. Front view of the Lenovo ThinkSystem SR630 V2

The following figure shows the components visible from the rear of the server. As shown, there are four different configurations available, including two with rear-mounted drive bays: two 2.5-inch hot-swap drive bays (SAS, SATA or NVMe) or new 7mm thickness hot-swap drives (SATA or NVMe).

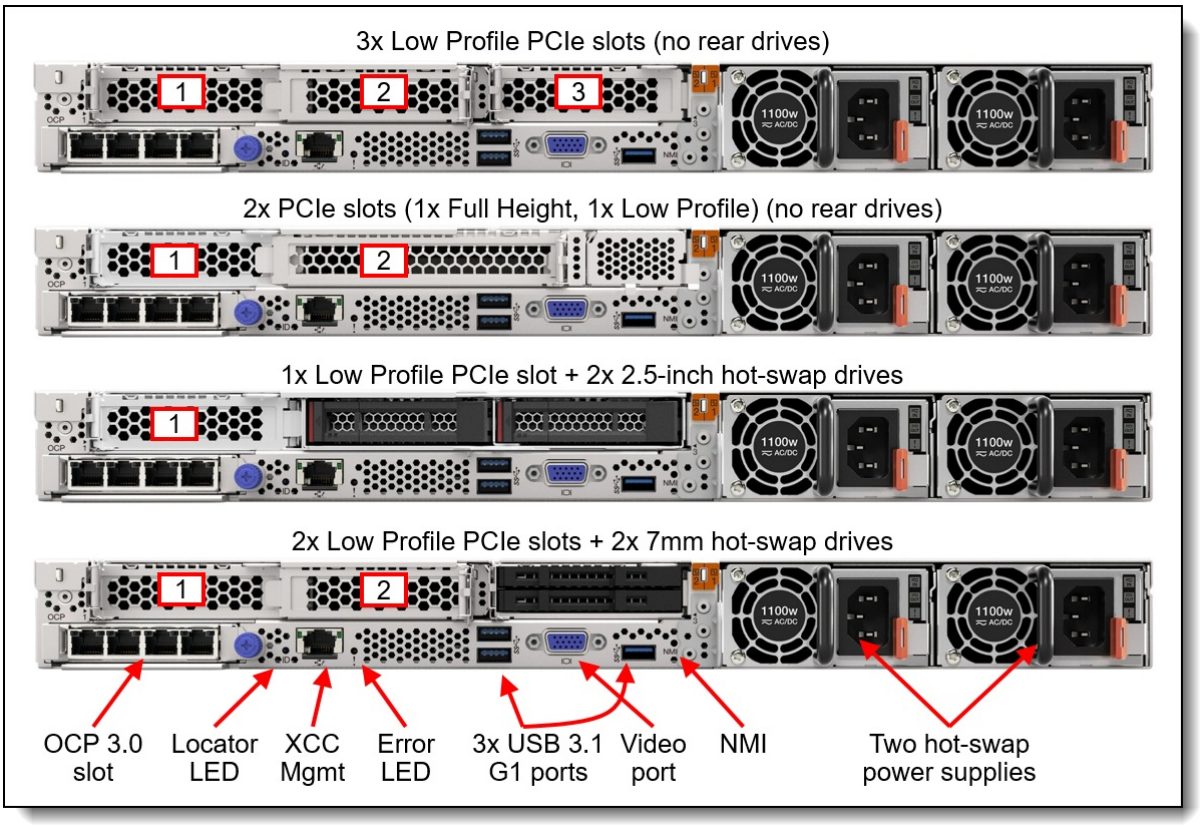

Figure 4. Rear view of the Lenovo ThinkSystem SR630 V2

The following figure shows the locations of key components inside the server.

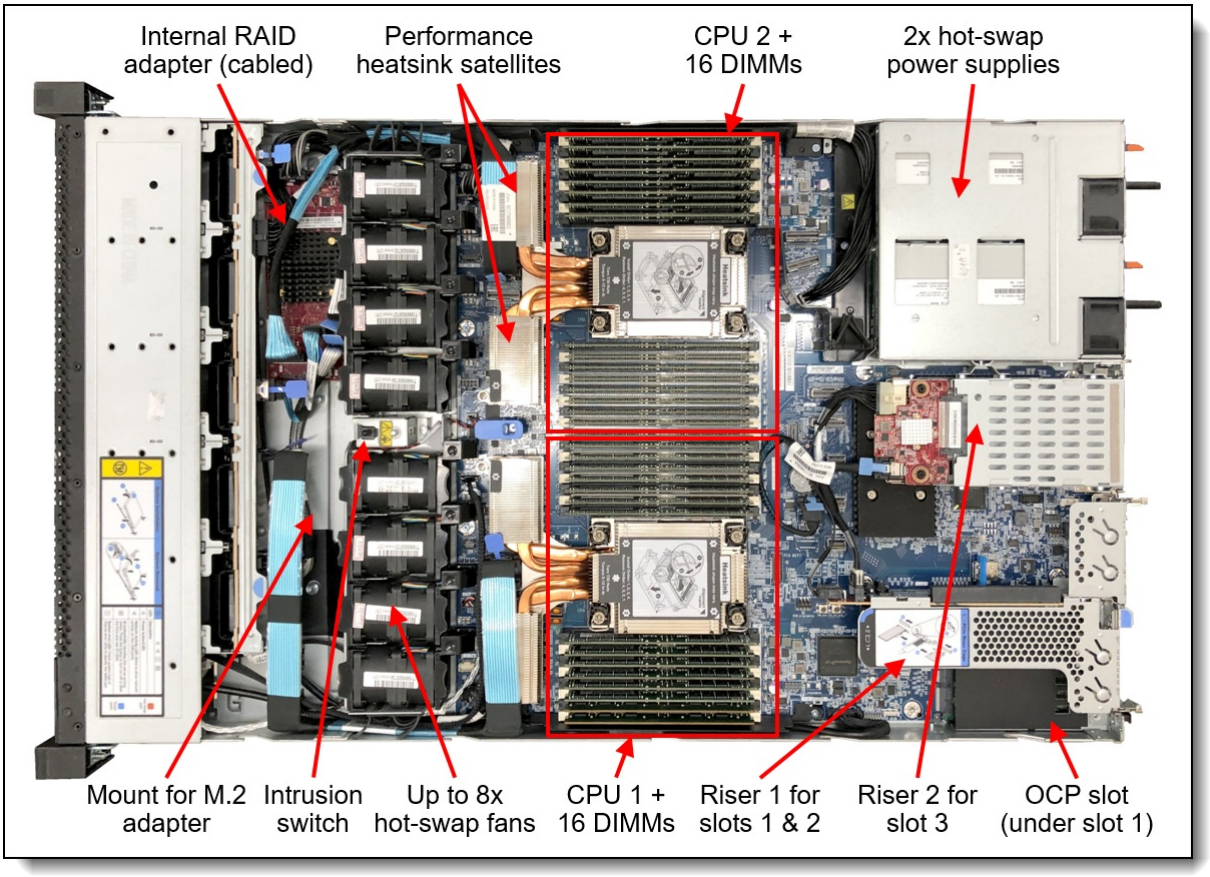

Figure 5. Internal view of the Lenovo ThinkSystem SR630 V2

System architecture

The following figure shows the architectural block diagram of the SR630 V2, showing the major components and their connections.

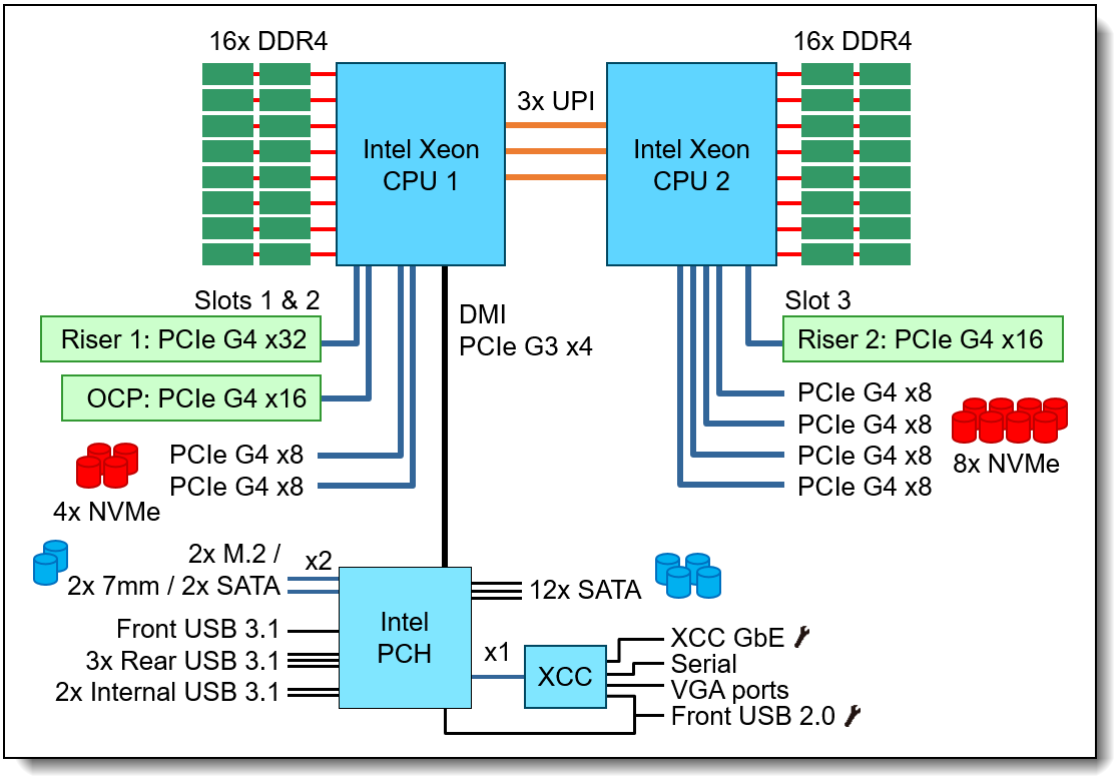

Figure 6. SR630 V2 system architectural block diagram

Standard specifications

The following table lists the standard specifications.

Table 2. Standard specifications

Components	Specification
Machine types	7Z70 - 1 year warranty 7Z71 - 3 year warranty
Form factor	1U rack.
Processor	One or two third-generation Intel Xeon Scalable processor (formerly codenamed "Ice Lake"). Supports processors up to 40 cores, core speeds of up to 3.6 GHz, and TDP ratings of up to 270W.
Chipset	Intel C621A "Lewisburg" chipset, part of the platform codenamed "Whitley"
Memory	32 DIMM slots with two processors (16 DIMM slots per processor). Each processor has 8 memory channels, with 2 DIMMs per channel (DPC). Lenovo TruDDR4 RDIMMs and 3DS RDIMMs are supported. DIMM slots are shared between standard system memory and persistent memory. DIMMs operate at up to 3200 MHz at 2 DPC.
Persistent memory	Supports up to 16x Intel Optane Persistent Memory 200 Series modules (8 per processor) installed in the DIMM slots. Persistent memory (Pmem) is installed in combination with system memory DIMMs.
Memory maximum	With RDIMMs: Up to 8TB by using 32x 256GB 3DS RDIMMs With Persistent Memory: Up to 12TB by using 16x 256GB 3DS RDIMMs and 16x 512GB Pmem modules

Components	Specification
Memory protection	ECC, SDDC (for x4-based memory DIMMs), ADDDC (for x4-based memory DIMMs, requires Platinum or Gold processors), and memory mirroring.

Disk drive bays	Up to 4x 3.5-inch or 12x 2.5-inch or 16x EDSFF hot-swap drive bays:
	• Front bays can be one of the following:
	  ◦ 10x 2.5-inch hot-swap: All AnyBay
	  ◦ 10x 2.5-inch hot-swap: All NVMe
	  ◦ 10x 2.5-inch hot-swap: 6x SAS/SATA + 4x AnyBay
	  ◦ 10x 2.5-inch hot-swap: 6x SAS/SATA + 4x NVMe
	  ◦ 10x 2.5-inch hot-swap: 6x SAS/SATA + 2x AnyBay + 2x NVMe
	  ◦ 8x 2.5-inch hot-swap SAS/SATA
	  ◦ 16x EDSFF E1.S form factor hot-swap drives
	  ◦ 4x 3.5-inch hot-swap SAS/SATA
	  ◦ 4x 3.5-inch hot-swap AnyBay
	• Rear can be one of the following:
	  ◦ 2x 2.5-inch hot-swap SAS/SATA bays
	  ◦ 2x 2.5-inch hot-swap NVMe bays
	  ◦ 2x 7mm 2.5-inch hot-swap SATA bays
	  ◦ 2x 7mm 2.5-inch hot-swap NVMe bays
	• Internal M.2 module supporting up to two M.2 drives, for OS boot and drive storage support
	See Supported drive bay combinations for details. AnyBay bays support SAS, SATA or NVMe drives. NVMe bays only support NVMe drives. Rear drive bays can be used in conjunction with 2.5-inch front drive bays. The server supports up to 12x NVMe drives all with direct connections (no oversubscription).

Maximum internal storage	• 2.5-inch drives:
	  ◦ 368.64TB using 12x 30.72TB 2.5-inch SAS/SATA SSDs
	  ◦ 737.28TB using 12x 61.44TB 2.5-inch NVMe SSDs
	  ◦ 28.8TB using 12x 2.4TB 2.5-inch HDDs
	• EDSFF drives
	  ◦ 122.88TB using 16x 7.68TB E1.S EDSFF NVMe SSDs
	• 3.5-inch drives:
	  ◦ 88TB using 4x 22TB 3.5-inch HDDs
	  ◦ 61.44TB using 4x 15.36TB 3.5-inch SAS/SATA SSDs
	  ◦ 51.2TB using 4x 12.8TB 3.5-inch NVMe SSDs

Storage controller	• 12x Onboard SATA ports (Intel VROC SATA RAID, formerly known as Intel RSTe RAID)
	• Up to 12x Onboard NVMe ports (includes Intel VROC NVMe RAID, with optional license for non-Intel NVMe SSDs)
	• NVMe Retimer Adapter (supports Intel VROC NVMe RAID)
	• 12 Gb SAS/SATA RAID adapters
	  ◦ 8, 16 or 32 ports
	  ◦ Up to 8GB flash-backed cache
	  ◦ PCIe 4.0 or PCIe 3.0 host interface
	• 12 Gb SAS/SATA HBA (non-RAID)
	  ◦ 8-port and 16-port
	  ◦ PCIe 4.0 or PCIe 3.0 host interface

Optical drive bays	No internal optical drive.
Tape drive bays	No internal backup drive.

Components	Specification
Network interfaces	Dedicated OCP 3.0 SFF slot with PCIe 4.0 x16 host interface. Supports a variety of 2-port and 4-port adapters with 1GbE, 10GbE and 25GbE network connectivity. One port can optionally be shared with the XClarity Controller (XCC) management processor for Wake-on-LAN and NC-SI support.
PCI Expansion slots	Up to 3x PCIe 4.0 slots, all with rear access, plus a slot dedicated to the OCP adapter. Slot availability is based on riser selection and rear drive bay selection. Slot 3 requires two processors. Four choices for rear-access slots: • 3x PCIe 4.0 x16 low-profile slots • 1x PCIe 4.0 x16 full-height half-length slot + 1x PCIe 4.0 x16 low-profile slot • 1x PCIe 4.0 x16 low-profile slot (also supports 2x rear 2.5-inch drive bays) • 2x PCIe 4.0 x16 low-profile slot (also supports 2x rear 7mm 2.5-inch drive bays) For 2.5-inch front drive configurations, the server supports the installation of a RAID adapter or HBA in a dedicated area that does not consume any of the PCIe slots. **Note**: Not all slots are available in a 1-processor configuration. See theI/O expansion for details.
GPU support	Supports up to 3x single-wide GPUs
Ports	Front: 1x USB 3.2 G1 (5 Gb/s) port, 1x USB 2.0 port (also for XCC local management), External diagnostics port, optional VGA port. Rear: 3x USB 3.2 G1 (5 Gb/s) ports, 1x VGA video port, 1x RJ-45 1GbE systems management port for XCC remote management. Optional DB-9 COM serial port (installs in slot 3). Internal: 1x USB 3.2 G1 connector for operating system or license key purposes
Cooling	Up to 8x N+1 dual-rotor redundant hot-swap 40 mm fans, configuration dependent. One fan integrated in each power supply.
Power supply	Up to two hot-swap redundant AC power supplies, 80 PLUS Platinum or 80 PLUS Titanium certification. 500 W, 750 W, 1100 W and 1800 W AC options, supporting 220 V AC. 500 W, 750 W and 1100 W options also support 110V input supply. In China only, all power supply options support 240 V DC. Also available is a 1100W power supply with a -48V DC input.
Video	G200 graphics with 16 MB memory with 2D hardware accelerator, integrated into the XClarity Controller. Maximum resolution is 1920x1200 32bpp at 60Hz.
Hot-swap parts	Drives, power supplies, and fans.
Systems management	Operator panel with status LEDs. Optional External Diagnostics Handset with LCD display. Models with 8x 2.5-inch front drive bays can optionally support an Integrated Diagnostics Panel. XClarity Controller (XCC) embedded management, XClarity Administrator centralized infrastructure delivery, XClarity Integrator plugins, and XClarity Energy Manager centralized server power management. Optional XClarity Controller Advanced and Enterprise to enable remote control functions.
Security features	Chassis intrusion switch, Power-on password, administrator's password, Trusted Platform Module (TPM), supporting TPM 2.0. In China only, optional Nationz TPM 2.0. Optional lockable front security bezel.
Operating systems supported	Microsoft Windows Server, Red Hat Enterprise Linux, SUSE Linux Enterprise Server, VMware ESXi. See the Operating system support section for specifics.
Limited warranty	Three-year or one-year (model dependent) customer-replaceable unit and onsite limited warranty with 9x5 next business day (NBD).
Service and support	Optional service upgrades are available through Lenovo Services: 4-hour or 2-hour response time, 6-hour fix time, 1-year or 2-year warranty extension, software support for Lenovo hardware and some third-party applications.

Components	Specification
Dimensions	Width: 440 mm (17.3 in.), height: 43 mm (1.7 in.), depth: 773 mm (30.4 in.). See Physical and electrical specifications for details.
Weight	Maximum: 20.8 kg (45.9 lb)

Models

ThinkSystem SR630 V2 models can be configured by using the Lenovo Data Center Solution Configurator (DCSC).

Topics in this section:

- CTO models
- Base models
- Preconfigured models

CTO models

ThinkSystem SR630 V2 models can be configured by using the Lenovo Data Center Solution Configurator (DCSC).

Configure-to-order (CTO) models are used to create models with factory-integrated server customizations. For CTO models, two types of base CTO models are available for the SR630 V2 as listed in the columns in the following table:

- General purpose base CTO models are for general business (non-HPC) and is selectable by choosing **General Purpose** mode in DCSC.
- AI and HPC base models are intended for Artificial Intelligence (AI) and High Performance Computing (HPC) configurations and solutions are enabled using the **AI & HPC Hardware - ThinkSystem Hardware** mode in DCSC. These configurations, along with Lenovo EveryScale Solutions, can also be built using System x and Cluster Solutions Configurator (x-config). **Tip**: Some HPC and AI models are not listed in DCSC and can only be configured in x-config.

"For AI" models: The base CTO models listed in the table with "for AI" in the names are the only base models that support high-performance GPUs and accelerators (Controlled GPUs). These models are classified under US Government ECCN regulations and have limited market and customer availability. All other base models do not support high-performance GPUs.

Preconfigured server models may also be available for the SR630 V2, however these are region-specific; that is, each region may define their own server models, and not all server models are available in every region.

The following table lists the base CTO models of the ThinkSystem SR630 V2 server.

Table 3. Base CTO models

Machine Type/Model General purpose	Machine Type/Model for AI and HPC	Description
7Z71CTO1WW	7Z71CTOLWW	ThinkSystem SR630 V2-3yr Warranty
7Z71CTOAWW	7Z71CTOHWW	ThinkSystem SR630 V2 - 3yr Warranty for AI
7Z70CTO1WW	7Z70CTOLWW	ThinkSystem SR630 V2-1yr Warranty

Base models

Models of the SR630 V2 are defined based on whether the server has 2.5-inch drive bays at the front (called the 10x 2.5" chassis or simply the 2.5-inch chassis) or whether it has 3.5-inch drive bays at the front (called the 3.5-inch chassis). For models, the feature codes for these chassis bases are as listed in the following table.

Table 4. Chassis base feature codes

Feature code	Description
B8N6	ThinkSystem 1U 2.5" Chassis with 8 or 10 Bays
B8N5	ThinkSystem 1U 3.5" Chassis with 4 Bays

Preconfigured models

The following tables list the available models, grouped by region.

- Models for Asia Pacific region

Refer to the Specifications section for information about standard features of the server.

Common to all models:

- All models indicated as having the 750W power supply are using the Platinum power supply
- All models include the front VGA port
- All models include a Toolless Slide Rail Kit

Models for Asia Pacific region

The following table lists the models for the Asia Pacific region: Australia, Bangladesh, Brunei, Hong Kong, India, Japan, Korea, Sri Lanka, Malaysia, New Zealand, Philippines, Singapore, Thailand, Taiwan, Vietnam

Table 5. Models for Asia Pacific markets

Model	Intel Xeon Scalable processor†	Memory	RAID	Drive bays	OCP	Slots	Power supply	XCC	Fans	Front VGA	Intru. sw.
Standard models with a 3-year warranty (machine type 7Z71)											
7Z71A09PAP	1x Silver 4309Y 8C 105W 2.8G	1x 16GB	9350-8i	8x 2.5" SAS; Open bay	4x1Gb I350	2x LP Gen3	1x750W	Std	6x Std	Opt	Opt
7Z71A09QAP	1x Silver 4309Y 8C 105W 2.8G	1x 16GB	9350-8i	8x 2.5" SAS; Open bay	4x1Gb I350	2x LP Gen4	1x750W	Std	6x Std	Opt	Opt
7Z71A09RAP	1x Silver 4309Y 8C 105W 2.8G	1x 16GB	9350-8i	4x 3.5" SAS; Open bay	4x1Gb I350	2x LP Gen3	1x750W	Std	6x Std	Opt	Opt
7Z71A09SAP	1x Silver 4310 12C 120W 2.1G	1x 16GB	9350-8i	4x 3.5" SAS; Open bay	4x1Gb I350	2x LP Gen3	1x750W	Std	6x Std	Opt	Opt
7Z71A09TAP	1x Silver 4310 12C 120W 2.1G	1x 16GB	9350-8i	8x 2.5" SAS; Open bay	4x1Gb I350	2x LP Gen3	1x750W	Std	6x Std	Opt	Opt

† Processor description: Processor model, number of cores, thermal design power (TDP), core frequency

Processors

The SR630 V2 supports processors in the third-generation Intel Xeon Scalable Processor family. The server supports one or two processors.

Topics in this section:

- Processor options
- Processor features
- One-processor configurations
- Thermal restrictions by processor

- UEFI operating modes

In the SR630 V2, processors either have a standard heatsink or a performance heatsink attached depending on the TDP of the processor and configuration of the server. Performance heatsinks include two additional satellite heatsinks that connect to the main heatsink via heat pipes.

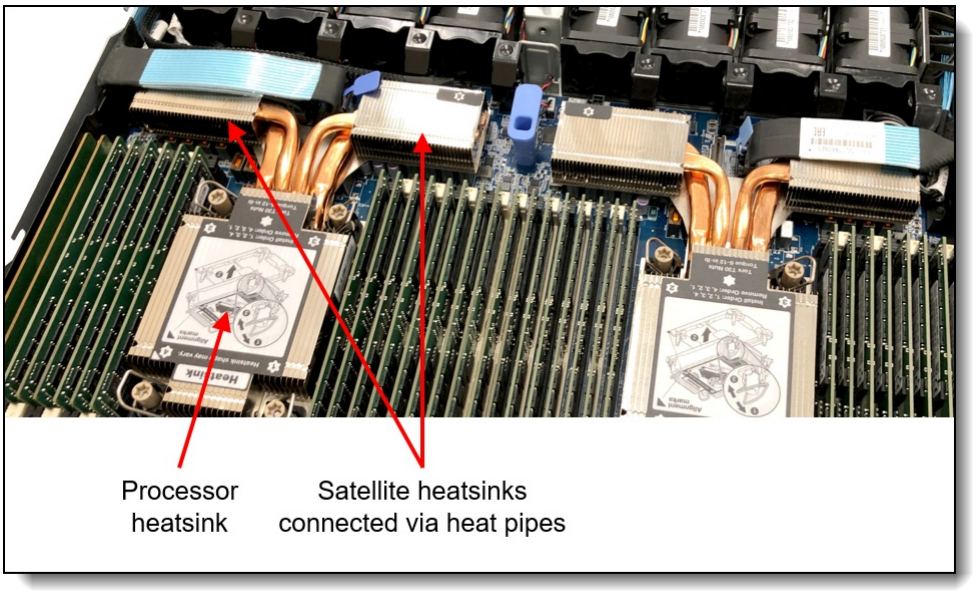

Figure 7. Performance heatsink in the SR630 V2

Processor options

The table below lists the processors that are supported.

Some processors include a suffix letter in the processor model number:

- M: Media Processing optimized
- N: NFV optimized
- P: High frequency-optimized for IaaS virtualization customers
- Q: Optimized for liquid cooling
- S: Large (512GB) SGX Enclave size
- T: High Tcase
- U: Single socket
- V: High density/low power-optimized for SaaS virtualization customers
- Y: Speed Select

Memory tiers: All processors support up to 6TB of memory. There are no L or M suffix processors.

Options part numbers only for second processor : The option part numbers listed in the table are only for use when adding a second processor. It is not supported to upgrade any processors already installed.

Table 14. Processor options

Part number	Feature code	Description	Maximum quantity†
4XG7A63398	BB2N	SR630 V2 Intel Xeon Silver 4309Y 8C 105W 2.8GHz Option Kit w/o Fan	2
4XG7A63425	BB3C	SR630 V2 Intel Xeon Silver 4310 12C 120W 2.1GHz Option Kit w/o Fan	2
4XG7A63416	BB34	SR630 V2 Intel Xeon Silver 4310T 10C 105W 2.3GHz Option Kit w/o Fan	2

Part number	Feature code	Description	Maximum quantity†
4XG7A63411	BB2Z	SR630 V2 Intel Xeon Silver 4314 16C 135W 2.4GHz Option Kit w/o Fan	2
4XG7A63422	BB39	SR630 V2 Intel Xeon Silver 4316 20C 150W 2.3GHz Option Kit w/o Fan	2
4XG7A63434	BB3M	SR630 V2 Intel Xeon Gold 5315Y 8C 140W 3.2GHz Option Kit w/o Fan	2
4XG7A63412	BB30	SR630 V2 Intel Xeon Gold 5317 12C 150W 3.0GHz Option Kit w/o Fan	2
4XG7A63427	BB3E	SR630 V2 Intel Xeon Gold 5318N 24C 150W 2.1GHz Option Kit w/o Fan	2
4XG7A63397	BB2M	SR630 V2 Intel Xeon Gold 5318S 24C 165W 2.1GHz Option Kit w/o Fan	2
4XG7A63417	BB35	SR630 V2 Intel Xeon Gold 5318Y 24C 165W 2.1GHz Option Kit w/o Fan	2
4XG7A63403	BB2R	SR630 V2 Intel Xeon Gold 5320 26C 185W 2.2GHz Option Kit w/o Fan	2
4XG7A63410	BB2Y	SR630 V2 Intel Xeon Gold 5320T 20C 150W 2.3GHz Option Kit w/o Fan	2
CTO only	BB2K	Intel Xeon Gold 6312U 24C 185W 2.4GHz Processor	1*
CTO only	BB38	Intel Xeon Gold 6314U 32C 205W 2.3GHz Processor	1*
4XG7A63401	BB4E	SR630 V2 Intel Xeon Gold 6326 16C 185W 2.9GHz Option Kit w/o Fan	2
4XG7A63430	BB3H	SR630 V2 Intel Xeon Gold 6330 28C 205W 2.0GHz Option Kit w/o Fan	2
4XG7A63435	BB3N	SR630 V2 Intel Xeon Gold 6330N 28C 165W 2.2GHz Option Kit w/o Fan	2
4XG7A63426	BB3D	SR630 V2 Intel Xeon Gold 6334 8C 165W 3.6GHz Option Kit w/o Fan	2
4XG7A63439	BB3S	SR630 V2 Intel Xeon Gold 6336Y 24C 185W 2.4GHz Option Kit w/o Fan	2
4XG7A63436	BB3P	SR630 V2 Intel Xeon Gold 6338 32C 205W 2.0GHz Option Kit w/o Fan	2
4XG7A63413	BB31	SR630 V2 Intel Xeon Gold 6338N 32C 185W 2.2GHz Option Kit w/o Fan	2
4XG7A63415	BB33	SR630 V2 Intel Xeon Gold 6338T 24C 165W 2.1GHz Option Kit w/o Fan	2
4XG7A63574	BB3B	SR630 V2 Intel Xeon Gold 6342 24C 230W 2.8GHz Option Kit w/o Fan	2
4XG7A63408	BB2W	SR630 V2 Intel Xeon Gold 6346 16C 205W 3.1GHz Option Kit w/o Fan	2
4XG7A63571	BB2L	SR630 V2 Intel Xeon Gold 6348 28C 235W 2.6GHz Option Kit w/o Fan	2
4XG7A63406	BB2U	SR630 V2 Intel Xeon Gold 6354 18C 205W 3.0GHz Option Kit w/o Fan	2
CTO only	BB3J	Intel Xeon Platinum 8351N 36C 225W 2.4GHz Processor	1*
4XG7A63654	BKDB	SR630 V2 Intel Xeon Platinum 8352M 32C 185W 2.3GHz Option Kit w/o Fan	2
4XG7A63437	BB3Q	SR630 V2 Intel Xeon Platinum 8352S 32C 205W 2.2GHz Option Kit w/o Fan	2
4XG7A63404	BB2S	SR630 V2 Intel Xeon Platinum 8352V 36C 195W 2.1GHz Option Kit w/o Fan	2
4XG7A63407	BB2V	SR630 V2 Intel Xeon Platinum 8352Y 32C 205W 2.2GHz Option Kit w/o Fan	2
4XG7A63438	BB3R	SR630 V2 Intel Xeon Platinum 8358 32C 250W 2.6GHz Option Kit w/o Fan	2
4XG7A63423	BB3A	SR630 V2 Intel Xeon Platinum 8358P 32C 240W 2.6GHz Option Kit w/o Fan	2
4XG7A63399	BB2P	SR630 V2 Intel Xeon Platinum 8360Y 36C 250W 2.4GHz Option Kit w/o Fan	2
4XG7A63653	BKDC	SR630 V2 Intel Xeon Platinum 8362 32C 265W 2.8GHz Option Kit w/o Fan	2
4XG7A63419	BB37	SR630 V2 Intel Xeon Platinum 8368 38C 270W 2.4GHz Option Kit w/o Fan	2
4XG7A63572	BB3G	SR630 V2 Intel Xeon Platinum 8380 40C 270W 2.3GHz Option Kit w/o Fan	2

* Processors with a U suffix and the 8351N processor are only supported one processor per server; as a result, there is no option part number for a second processor.
† The server supports two processors. In the configurator, you can select 1 or 2 processor feature codes. However for option part numbers, only 1 is supported per server. The option part numbers are only for use when adding a second processor. It is not supported to use the option part numbers to upgrade any processors already installed.

Processor features

Supported processors have the following features:

- Third-generation Intel Xeon Scalable processors (formerly codenamed "Ice Lake")
- 10 nm process technology
- 8x DDR4 memory channels
- 64x PCIe 4.0 I/O lanes available for PCIe and NVMe devices
- 1.25 MB L2 cache per core
- 1.5 MB or more L3 cache per core
- Intel Deep Learning Boost, which provides built-in Artificial Intelligence (AI) acceleration with the Vector Neural Network Instruction set (VNNI). DL Boost and VNNI are designed to deliver significant, more efficient Deep Learning (Inference) acceleration for high-performance AI workloads.
- Intel Hyper-Threading Technology, which boosts performance for multithreaded applications by enabling simultaneous multithreading within each processor core, up to two threads per core.
- Intel Turbo Boost Technology 2.0, which allows processor cores to run at maximum speeds during peak workloads by temporarily going beyond processor TDP.
- Intel Virtualization Technology (includes VT-x and VT-d), which integrates hardware-level virtualization hooks that allow operating system vendors to better use the hardware for virtualization workloads.
- Intel Speed Select Technology, supported on some processor models, enables increased core Turbo Boost frequency on specific individual cores to maximize application performance.
- Intel Advanced Vector Extensions 512 (AVX-512), to enable acceleration of enterprise-class workloads, including databases and enterprise resource planning (ERP).
- Up to two Intel AVX-512 Fused-Multiply Add (FMA) units
- Intel SGX (Software Guard Extensions) and Intel TME (Total Memory Encryption) security features
- Two or three Intel Ultra Path Interconnect (UPI) links at up to 11.2 GT/s, to maximize inter-processor communication

The following table compares the features of the supported third-generation Intel Xeon processors.

Abbreviations used in the table:

- TB: Turbo Boost 2.0
- UPI: Ultra Path Interconnect
- TDP: Thermal Design Power
- SGX: Software Guard Extensions
- PMem: Persistent Memory support

Table 15. Processor features

CPU model	Cores/ threads	Core speed (Base / TB max)	L3 cache*	Max memory speed	UPI links & speed	TDP	SGX Enclave Size	Pmem
4309Y	8 / 16	2.8 GHz / 3.6 GHz	12 MB	2667 MHz	2 / 10.4 GT/s	105W	8 GB	No
4310	12 / 24	2.1 GHz / 3.3 GHz	18 MB	2667 MHz	2 / 10.4 GT/s	120W	8 GB	No
4310T	10 / 20	2.3 GHz / 3.4 GHz	15 MB	2667 MHz	2 / 10.4 GT/s	105W	8 GB	No
4314	16 / 32	2.4 GHz / 3.4 GHz	24 MB	2667 MHz	2 / 10.4 GT/s	135W	8 GB	Yes
4316	20 / 40	2.3 GHz / 3.4 GHz	30 MB	2667 MHz	2 / 10.4 GT/s	150W	8 GB	No
5315Y	8 / 16	3.2 GHz / 3.6 GHz	12 MB	2933 MHz	3 / 11.2 GT/s	140W	64 GB	Yes
5317	12 / 24	3.0 GHz / 3.6 GHz	18 MB	2933 MHz	3 / 11.2 GT/s	150W	64 GB	Yes
5318N	24 / 48	2.1 GHz / 3.4 GHz	36 MB	2667 MHz	3 / 11.2 GT/s	150W	64 GB	Yes

CPU model	Cores/ threads	Core speed (Base / TB max)	L3 cache*	Max memory speed	UPI links & speed	TDP	SGX Enclave Size	Pmem
5318S	24 / 48	2.1 GHz / 3.4 GHz	36 MB	2933 MHz	3 / 11.2 GT/s	165W	512 GB	Yes
5318Y	24 / 48	2.1 GHz / 3.4 GHz	36 MB	2933 MHz	3 / 11.2 GT/s	165W	64 GB	Yes
5320	26 / 52	2.2 GHz / 3.4 GHz	39 MB	2933 MHz	3 / 11.2 GT/s	185W	64 GB	Yes
5320T	20 / 40	2.3 GHz / 3.5 GHz	30 MB	2933 MHz	3 / 11.2 GT/s	150W	64 GB	Yes
6312U	24 / 48	2.4 GHz / 3.6 GHz	36 MB	3200 MHz	None	185W	64 GB	Yes
6314U	32 / 64	2.3 GHz / 3.4 GHz	48 MB	3200 MHz	None	205W	64 GB	Yes
6326	16 / 32	2.9 GHz / 3.5 GHz	24 MB	3200 MHz	3 / 11.2 GT/s	185W	64 GB	Yes
6330	28 / 56	2.0 GHz / 3.1 GHz	42 MB	2933 MHz	3 / 11.2 GT/s	205W	64 GB	Yes
6330N	28 / 56	2.2 GHz / 3.4 GHz	42 MB	2667 MHz	3 / 11.2 GT/s	165W	64 GB	Yes
6334	8 / 16	3.6 GHz / 3.7 GHz	18 MB*	3200 MHz	3 / 11.2 GT/s	165W	64 GB	Yes
6336Y	24 / 48	2.4 GHz / 3.6 GHz	36 MB	3200 MHz	3 / 11.2 GT/s	185W	64 GB	Yes
6338	32 / 64	2.0 GHz / 3.2 GHz	48 MB	3200 MHz	3 / 11.2 GT/s	205W	64 GB	Yes
6338N	32 / 64	2.2 GHz / 3.5 GHz	48 MB	2667 MHz	3 / 11.2 GT/s	185W	64 GB	Yes
6338T	24 / 48	2.1 GHz / 3.4 GHz	36 MB	3200 MHz	3 / 11.2 GT/s	165W	64 GB	Yes
6342	24 / 48	2.8 GHz / 3.5 GHz	36 MB	3200 MHz	3 / 11.2 GT/s	230W	64 GB	Yes
6346	16 / 32	3.1 GHz / 3.6 GHz	36 MB*	3200 MHz	3 / 11.2 GT/s	205W	64 GB	Yes
6348	28 / 56	2.6 GHz / 3.5 GHz	42 MB	3200 MHz	3 / 11.2 GT/s	235W	64 GB	Yes
6354	18 / 36	3.0 GHz / 3.6 GHz	39 MB*	3200 MHz	3 / 11.2 GT/s	205W	64 GB	Yes
8351N	36 / 72	2.4 GHz / 3.5 GHz	54 MB	2933 MHz	None	225W	64 GB	Yes
8352M	32 / 64	2.3 GHz / 3.5 GHz	48 MB	3200 MHz	3 / 11.2 GT/s	185W	64 GB	Yes
8352S	32 / 64	2.2 GHz / 3.4 GHz	48 MB	3200 MHz	3 / 11.2 GT/s	205W	512 GB	Yes
8352V	36 / 72	2.1 GHz / 3.5 GHz	54 MB	2933 MHz	3 / 11.2 GT/s	195W	8 GB	Yes
8352Y	32 / 64	2.2 GHz / 3.4 GHz	48 MB	3200 MHz	3 / 11.2 GT/s	205W	64 GB	Yes
8358	32 / 64	2.6 GHz / 3.4 GHz	48 MB	3200 MHz	3 / 11.2 GT/s	250W	64 GB	Yes
8358P	32 / 64	2.6 GHz / 3.4 GHz	48 MB	3200 MHz	3 / 11.2 GT/s	240W	8 GB	Yes
8360Y	36 / 72	2.4 GHz / 3.5 GHz	54 MB	3200 MHz	3 / 11.2 GT/s	250W	64 GB	Yes
8362	32 / 64	2.8 GHz / 3.6 GHz	48 MB	3200 MHz	3 / 11.2 GT/s	265W	64 GB	Yes
8368	38 / 76	2.4 GHz / 3.4 GHz	57 MB	3200 MHz	3 / 11.2 GT/s	270W	512 GB	Yes
8380	40 / 80	2.3 GHz / 3.4 GHz	60 MB	3200 MHz	3 / 11.2 GT/s	270W	512 GB	Yes

* L3 cache is 1.5 MB per core or larger. Processors with a larger L3 cache per core are marked with an *

One-processor configurations

The SR630 V2 can be used with only one processor installed. Most core functions of the server (including the XClarity Controller) are connected to processor 1 as shown in the System architecture section.

With only one processor, the server has the following capabilities:

- 16 memory DIMMs for a 2TB maximum
- Two PCIe 4.0 slots, Slot 1 and Slot 2 are available; Slot 3 is not available
- OCP 3.0 slot
- Up to 4x NVMe front drives using onboard connections
- 7mm drives
- M.2 drives
- Internal RAID adapter or HBA (CFF form factor)

Thermal restrictions by processor

In the SR630 V2, processors either use a standard or performance heatsink depending on the TDP of the processor. Performance heatsinks include two satellite heatsinks that connect to the main heatsink via liquid filled copper tubes.

- Standard heatsink: TDP ≤ 205 W
- Performance heatsink: TDP > 205 W

The use of higher-TDP processors impacts the choice of some components as listed in the following table.

Table 16. Restrictions based on processor TDP

Component	TDP ≤ 205 W	TDP ≤ 220 W	TDP ≤ 250 W	TDP ≤ 270 W
Front 10x 2.5-inch AnyBay backplane	Supported	Supported	Supported	No support
Front 10x 2.5-inch NVMe backplane	Supported	Supported	Supported	No support
Front 16x EDSFF backplane	Supported	Supported	Supported	No support
Any other front backplane	Supported	Supported	Supported	Supported
GPUs with 4x 2.5-inch backplane	Supported	Supported	Supported	Supported
GPUs with any other front backplanes	Supported	Supported	No support	No support
Rear 2.5-inch drives	Supported	No support	No support	No support

Additional ambient temperature restrictions may apply. See the Operating environment section for details.

UEFI operating modes

The SR630 V2 offers preset operating modes that affect energy consumption and performance. These modes are a collection of predefined low-level UEFI settings that simplify the task of tuning the server to suit your business and workload requirements.

The following table lists the feature codes that allow you to specify the mode you wish to preset in the factory for CTO orders.

UK and EU customers: For compliance with the ERP Lot9 regulation, you should select feature BFYE. For some systems, you may not be able to make a selection, in which case, it will be automatically derived by the configurator.

Table 17. UEFI operating mode presets in DCSC

Feature code	Description
BFYB	Operating mode selection for: "Maximum Performance Mode"
BFYC	Operating mode selection for: "Minimal Power Mode"
BFYD	Operating mode selection for: "Efficiency Favoring Power Savings Mode"
BFYE	Operating mode selection for: "Efficiency - Favoring Performance Mode"

The preset modes for the SR630 V2 are as follows:

- **Maximum Performance Mode** (feature BFYB): Achieves maximum performance but with higher power consumption and lower energy efficiency.
- **Minimal Power Mode** (feature BFYC): Minimize the absolute power consumption of the system.
- **Efficiency Favoring Power Savings Mode** (feature BFYD): Maximize the performance/watt efficiency with a bias towards power savings. This is the favored mode for SPECpower benchmark testing, for example.

- **Efficiency Favoring Performance Mode** (feature BFYE): Maximize the performance/watt efficiency with a bias towards performance. This is the favored mode for Energy Star certification, for example.

For details about these preset modes, and all other performance and power efficiency UEFI settings offered in the SR630 V2, see the paper "Tuning UEFI Settings for Performance and Energy Efficiency on Intel Xeon Scalable Processor-Based ThinkSystem Servers", available from https://lenovopress.lenovo.com/lp1477.

Memory options

The SR630 V2 uses Lenovo TruDDR4 memory and supports 16 DIMMs per processor or 32 DIMMs with two processors installed. Each processor has eight memory channels with two DIMMs per channel. With 256 GB 3DS RDIMMs installed, the SR630 V2 supports a total of 8 TB of system memory.

The SR630 V2 also supports Intel Optane Persistent Memory 200 Series, as described in the Persistent Memory section.

Memory operates at up to 3200 MHz at two DIMMs per channel, depending on the memory DIMMs and processor model selected. If the processor selected has a lower memory bus speed, then all DIMMs will operate at that lower speed.

The following table lists the memory options that are available for the server.

Lenovo TruDDR4 memory uses the highest quality components that are sourced from Tier 1 DRAM suppliers and only memory that meets the strict requirements of Lenovo is selected. It is compatibility tested and tuned to maximize performance and reliability. From a service and support standpoint, Lenovo TruDDR4 memory automatically assumes the system warranty, and Lenovo provides service and support worldwide.

Table 18. Memory options

Part number	Feature code	Description	Maximum supported
RDIMMs			
4X77A08632	B963	ThinkSystem 16GB TruDDR4 3200MHz (2Rx8 1.2V) RDIMM	32 (16 per processor)
4X77A08633	B964	ThinkSystem 32GB TruDDR4 3200MHz (2Rx4 1.2V) RDIMM	32 (16 per processor)
4X77A08634	B965	ThinkSystem 32GB TruDDR4 3200MHz (2Rx8 1.2V) RDIMM	32 (16 per processor)
4X77A08635	B966	ThinkSystem 64GB TruDDR4 3200MHz (2Rx4 1.2V) RDIMM	32 (16 per processor)
3DS RDIMMs			
4X77A08636	BA62	ThinkSystem 128GB TruDDR4 3200 MHz (2S2Rx4 1.2V) 3DS RDIMM	32 (16 per processor)
4ZC7A08727	B4Y3	ThinkSystem 256GB TruDDR4 2933MHz (8Rx4 1.2V) 3DS RDIMM	32 (16 per processor)

The following rules apply when selecting the memory configuration:

- The following DIMM quantities are supported per processor: 1, 2, 4, 6, 8, 12, and 16. Other quantities per processor are not supported.
- The server supports RDIMMs and 3DS RDIMMs; UDIMMs and LRDIMMs are not supported
- Mixing RDIMMs and 3DS RDIMMs is not supported
- Mixing x4 and x8 DIMMs is supported

For best performance, consider the following:

- Populate memory DIMMs in quantities of 8 or 16 per processor, so that all memory channels are used.
- Populate memory channels so they all have the same total memory capacity.
- Ensure all memory controllers on a processor socket have the same DIMM configuration.
- All processor sockets on the same physical server should have the same DIMM configuration.

The following memory protection technologies are supported:

- ECC
- SDDC (for x4-based memory DIMMs; look for "x4" in the DIMM description)
- ADDDC (for x4-based memory DIMMs)
- Memory mirroring

Note: Memory sparing is not supported

If memory channel mirroring is used, then DIMMs must be installed in pairs or sets of three (minimum of one pair or set of three per processor), and all DIMMs in the pair or set of three must be identical in type and size. 50% of the installed capacity is available to the operating system. Memory rank sparing is not supported.

Persistent memory

The SR630 V2 server supports Intel Optane Persistent Memory 200 Series, a new class of memory and storage technology explicitly architected for data center usage. Persistent memory is an innovative technology that delivers a unique combination of affordable large memory capacity and persistence (non-volatility). It offers significantly lower latency than fetching data from SSDs, even NVMe SSDs, and offers higher capacities than system memory.

Persistent memory technology can help boost the performance of data-intensive applications such as in-memory analytics, databases, content delivery networks, and high performance computing (HPC), as well as deliver consistent service levels at scale with higher virtual machine and container density. When data is stored closer to the processor on nonvolatile media, applications can see significant overall improvement in performance.

The following table lists the ordering information for the supported persistent memory modules.

Table 19. Persistent memory module part numbers

Part number	Feature code	Description	Maximum supported
4ZC7A08732	B98B	ThinkSystem 128GB TruDDR4 3200MHz (1.2V) Intel Optane Persistent Memory	16 (8 per processor)
4ZC7A08734	B98A	ThinkSystem 256GB TruDDR4 3200MHz (1.2V) Intel Optane Persistent Memory	16 (8 per processor)
4ZC7A08736	BB8T	ThinkSystem 512GB TruDDR4 3200MHz (1.2V) Intel Optane Persistent Memory	16 (8 per processor)

The following are the requirements when installing persistent memory (PMem) modules when installed in a two-socket server with third-generation Intel Xeon Scalable processors ("Ice Lake" processors):

- App Direct Mode and Memory Mode are supported. Mixed Mode is not supported.
- All PMem modules operate at 3200 MHz when the installed processor runs the memory bus at 3200 MHz.
- All installed PMem modules must be the same size. Mixing PMem modules of different capacities is not supported.
- Maximum 8 PMem modules per processor (install 1 in each memory channel).
- For each memory channel with both a PMem module and a memory DIMM installed, the PMem module is installed in channel slot 1 (DIMM1, closer to the processor) and the DIMM is installed in channel slot 0 (DIMM0).
- To maximize performance, balance all memory channels
- Both interleaved and non-interleaved modes are supported.
- Memory mirroring is not supported with PMem modules installed

For details, including App Direct Mode and Memory Mode configuration requirements, see the Intel Optane Persistent Memory 200 Series product guide, https://lenovopress.com/LP1380

Internal storage

The SR630 V2 supports 4x 3.5-inch or 12x 2.5-inch or 16x EDSFF drive bays, depending on the selected chassis and backplane configuration. The server also supports configurations without any drive bays if desired.

The two drive bay zones are as follows:

- Front:
  - 4x 3.5-inch hot-swap bays, or
  - Up to 10x 2.5-inch hot-swap bays, or
  - 16x EDSFF hot-swap bays
- Rear:
  - 2x 2.5-inch hot-swap bays, or
  - 2x 7mm hot-swap drives bays

All drives are hot-swap and are accessible from the front or from the rear.

The server also supports one or two M.2 drives, installed in an M.2 adapter internal to the server.

In this section:

- NVMe drive support
- Tri-Mode support - RAID 940 adapters
- Front drive bays
- Rear drive bays
- Supported drive bay combinations
- Controller selections
- Field upgrades
- RAID flash power module (supercap) support
- M.2 drives
- 7mm drives
- EDSFF drives
- SED encryption key management with SKLM

NVMe drive support

The SR630 V2 supports NVMe drives to maximize storage performance:

- In 2.5-inch front drive configurations, the server supports up to 12 NVMe drives without oversubscription (that is, each x4 drive has a full x4 connection (4 lanes) to the processor), ten drives at the front and two drives at the rear.
- In 3.5-inch front drive configurations, the servers supports up to 6 NVMe x4 drives without oversubscription, four 3.5-inch drives at the front and two 2.5-inch NVMe drives at the rear of the server.
- In EDSFF front drive configurations, the server supports up to 16x NVMe x4 drives without oversubscription, 12 drives connected to onboard NVMe connections and 4 drives connected to a Retimer adapter.

The specifics of these configurations are covered in the Supported drive bay combinations and Controller selections sections.

In addition, the SR630 V2 supports two 7mm NVMe drives for use as boot drives. These two drives are connected via separate RAID controller connected to a single PCIe 3.0 x2 host interface. See the 7mm drives section for details.

Tri-Mode support - RAID 940 adapters

The RAID 940 adapters support NVMe through a feature named Tri-Mode support (or Trimode support). This feature enables the use of NVMe U.3 drives at the same time as SAS and SATA drives. Tri-Mode requires an AnyBay backplane. Cabling of the controller to the backplanes is the same as with SAS/SATA drives, and the NVMe drives are connected via a PCIe x1 link to the controller.

NVMe drives connected using Tri-Mode support provide better performance than SAS or SATA drives: A SATA SSD has a data rate of 6Gbps, a SAS SSD has a data rate of 12Gbps, whereas an NVMe U.3 Gen 4 SSD with a PCIe x1 link will have a data rate of 16Gbps. NVMe drives typically also have lower latency and higher IOPS compared to SAS and SATA drives. Tri-Mode is supported with U.3 NVMe drives and requires an AnyBay backplane.

Tri-Mode requires U.3 drives: Only NVMe drives with a U.3 interface are supported. U.2 drives are not supported. See the Internal drive options section for the U.3 drives supported by the server.

Front drive bays

The front drive bay zone supports the following configurations:

- 2.5-inch drive bays
  - No backplane and no drives (supports field upgrades)
  - 10x 2.5-inch hot-swap AnyBay
  - 10x 2.5-inch hot-swap NVMe
  - 6x 2.5-inch hot-swap SAS/SATA + 4x hot-swap AnyBay
  - 6x 2.5-inch hot-swap SAS/SATA + 4x hot-swap NVMe
  - 6x 2.5-inch hot-swap SAS/SATA + 2x hot-swap AnyBay + 2x hot-swap NVMe
  - 8x 2.5-inch hot-swap SAS/SATA
  - 4x 2.5-inch hot-swap SAS/SATA
- EDSFF drive bays
  - 16x EDSFF E1.S hot-swap NVMe
- 3.5-inch drive bays
  - No backplane and no drives (supports field upgrades)
  - 4x 3.5-inch SAS/SATA
  - 4x 3.5-inch AnyBay

These configurations are shown in the following figure. The feature codes listed correspond to the feature codes listed in the table below the figure.

Integrated LCD diagnostic panel: The following two configurations can be configured with or without an Integrated Diagnostics Panel with pull-out LCD display. See the Local management section for details:

- 8x 2.5-inch hot-swap SAS/SATA
- 16x EDSFF E1.S hot-swap NVMe

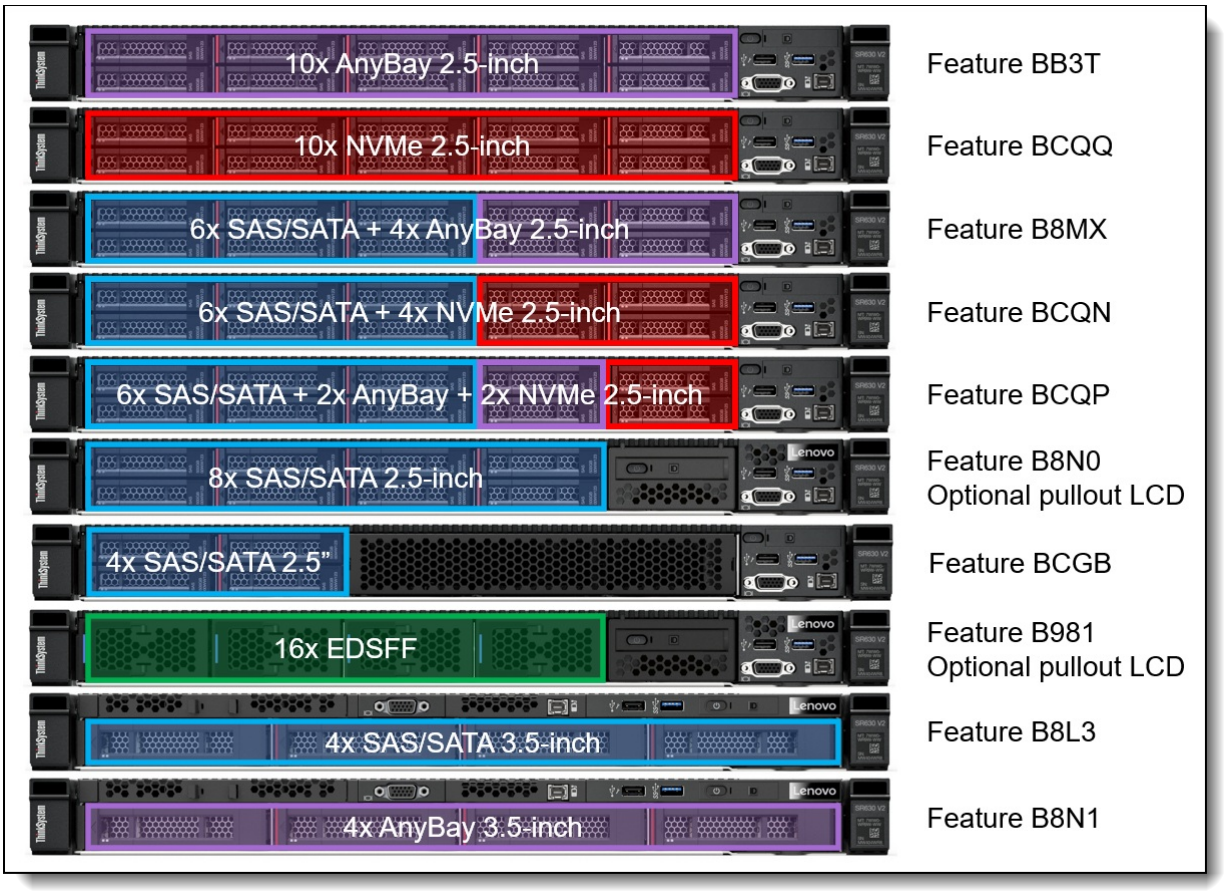

Figure 8. SR630 V2 front drive bay configurations

The backplanes used to provide these drive bays are listed in the following table.

Field upgrades: With the exception of the 4x 2.5-inch backplane and 16x EDSFF backplane, all front backplanes are available as part numbers for field upgrades using upgrade kits, as described in the Field upgrades section below.

Table 20. Backplanes for front drive bays

Feature code*	Description	Maximum supported
Front 2.5-inch drive backplanes		
BB3T	ThinkSystem 1U 10x2.5" AnyBay Backplane	1
BCQQ	ThinkSystem 1U 10x2.5" NVMe Backplane	1
B8MX	ThinkSystem 1U 10x2.5" (6x SAS/SATA 4x AnyBay) Backplane	1
BCQN	ThinkSystem 1U 2.5" 6 SAS/SATA 4 NVMe Backplane	1
BCQP	ThinkSystem 1U 10x2.5" (6x SAS/SATA 2x AnyBay 2x NVMe) Backplane	1
B8N0	ThinkSystem 1U 8x2.5" SAS/SATA Backplane	1
BCGB	ThinkSystem 1U 4x2.5" SAS/SATA Backplane	1
Front EDSFF drive backplane		
B981	ThinkSystem 1U 16xEDSFF Backplane	1
Front 3.5-inch drive backplanes		
B8L3	ThinkSystem 1U/2U 4x3.5" SAS/SATA Backplane	1
B8N1	ThinkSystem 1U 4x3.5" AnyBay Backplane	1

* With the exception of the 4x 2.5-inch backplane, all front backplanes are available as part numbers for field upgrades using upgrade kits, as described in the Field upgrades section below.

Common backplanes: Some of the backplanes listed in the above table are shared:

- Feature codes BB3T and BCQQ, both use the 10x AnyBay backplane. The difference is how the bays are cabled - NVMe or SAS/SATA or both. These all use backplane SBB7A20714.
- Feature codes B8MX, BCQN and BCQP all use a backplane with 6x SAS/SATA bays and 4x AnyBay bays. The difference is which connectors on the backplane are cabled for each of the four AnyBay bays - NVMe or SAS/SATA or both. These all use backplane SBB7A06903.

Rear drive bays

The SR630 V2 supports hot-swap drives installed at the rear of the server chassis. Supported configurations are as follows:

- 2x 2.5-inch hot-swap SAS/SATA drive bays
- 2x 2.5-inch hot-swap NVMe drive bays
- 2x 7mm SAS/SATA drive bays
- 2x 7mm NVMe drive bays

The configurations are shown in the following figure.

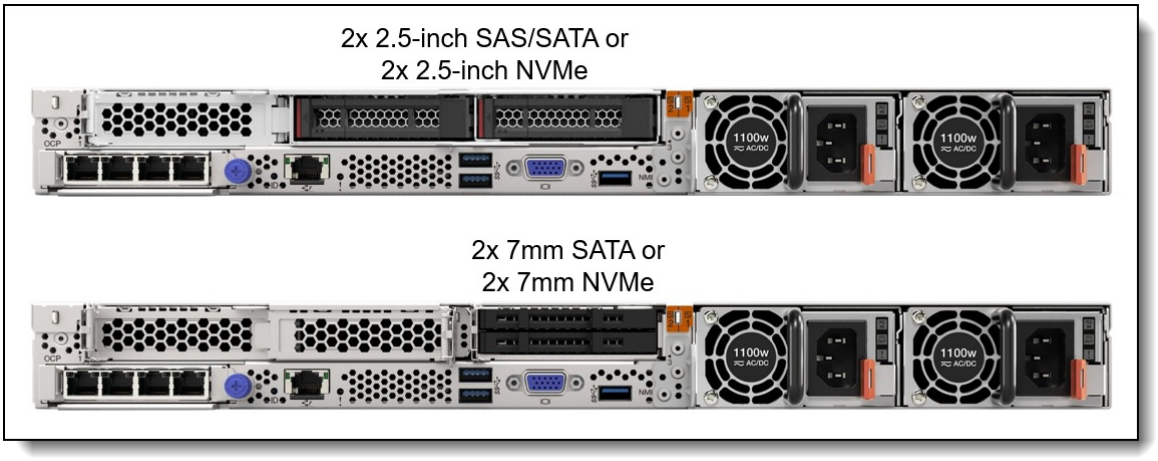

Figure 9. Rear drive bay configurations

The backplanes used to provide these drive bays are listed in the following table.

Table 21. Backplanes for rear drive bays

Part number	Feature code	Description	Maximum supported
Rear - 2.5-inch drive backplanes			
4XH7A61125	B8MY	ThinkSystem SR630 V2 Rear 2x2.5" SAS/SATA Backplane Option Kit v2	1
4XH7A60975	B8MY	ThinkSystem SR630 V2 Rear 2x2.5" SAS/SATA Backplane Option Kit	1
4XH7A80459	BDY6	ThinkSystem SR630 V2 Rear 2x2.5" NVMe Backplane Option Kit v2	1
4XH7A60974	BDY6	ThinkSystem SR630 V2 Rear 2x2.5" NVMe Backplane Option Kit	1
Rear - 7mm drive backplanes			
4XH7A60977	BA1R	ThinkSystem SR630 V2 Rear 2x7mm SATA RAID Enablement Kit	1
4XH7A60976	B8Q2	ThinkSystem SR630 V2 Rear 2x7mm NVMe RAID Enablement Kit	1

The use of rear drive bays has the following configuration rules:

- With 2.5-inch rear drive bays, only slot 1 is available. Slot 2 and 3 are not available
- The use of 2x 2.5-inch NVMe rear drives requires 2 processors
- With 7mm rear drive bays, slots 1 and 2 are available and slot 2 is a low profile slot. Slot 3 is not available.
- 7mm drive enclosure is connected to onboard NVMe port and cannot be connected to any installed RAID adapter or HBA
- GPUs are not supported

Supported drive bay combinations

This section describes the various combinations of 3.5-inch and 2.5-inch drives that the server supports. The drive bay combinations are grouped based on the drive type at the front of the server, 3.5-inch or 2.5-inch.

Tip for field support: Hover over the Configuration letter to see the TRD storage configurations that it relates to.

3.5-inch drive bay chassis

The following table shows the supported combinations when the server is configured with a 3.5-inch chassis (where the front drive bays are 3.5-inch). The table lists the front and rear backplanes required for each drive bay combination. The choice of storage controller for each configuration is listed in the Controller selections section.

Table 22. Drive bay and backplane combinations with 3.5-inch chassis (Blue cells = SAS/SATA, Red = NVMe) (S/S = SAS/SATA, Any = AnyBay)

Cfg	CPUs	Total drives	NVMe drives§	Front bays (3.5")		Rear bays (2.5")		Rear bays (7mm)	Front backplane	Rear backplane
				S/S 3.5"	Any 3.5"	S/S 2.5"	NVM 2.5"			
A	1 or 2	4	0	4	0	0	0	Optional	4xS/S	None
B	1 or 2	6	0	4	0	2	0	No support	4xS/S	2xSAS/SATA
C	2	6	2	4	0	0	2	No support	4xS/S	2xNVMe
D	1 or 2	4	4 (1:1)	0	4	0	0	Optional	4xAny	None
E	1 or 2	6	4 (1:1)	0	4	2	0	No support	4xAny	2xSAS/SATA
F	2	6	6 (1:1)	0	4	0	2	No support	4xAny	2xNVMe

2.5-inch drive bay chassis

The following table shows the supported combinations when the server is configured with a 2.5-inch chassis (where the front drive bays are 2.5-inch). The table lists the front and rear backplanes required for each drive bay combination. The choice of storage controller for each configuration is listed in the Controller selections section.

Table 23. Drive bay and backplane combinations with 2.5-inch chassis (Blue = SAS/SATA, Red = NVMe, Purple = AnyBay) (S/S = SAS/SATA, Any = AnyBay)

				Front bays (2.5")				Rear bays (2.5")				
Cfg	CPUs	Total drives	Total NVMe	S/S 2.5"	Any 2.5"	NVMe 2.5"	EDSFF	S/S 2.5"	NVM 2.5"	Rear bays (7mm)	Front backplane	Rear backplane
A	1 or 2	4	0	4	0	0	0	0	0	Optional	4xS/S (BCGB)	None
B	1 or 2	8	0	8	0	0	0	0	0	Optional	8xS/S (B8N0)	None
C	1 or 2	10	0	8	0	0	0	2	0	No support	8xS/S (B8N0)	2xSAS/SATA (B8MY)
D	1 or 2†	10	4 (1:1)	6	4	0	0	0	0	Optional	6xSAS +4xAny (B8MX)	None
E	2	12	6 (1:1)	6	4	0	0	0	2	No support	6xSAS +4xAny (B8MX)	2xNVMe (B5VQ)
F	2	12	4 (1:1)	6	4	0	0	2	0	No support	6xSAS +4xAny (B8MX)	2xSAS/SATA (B8MY)
G	1 or 2	12	4 (1:1)	6	0	4	0	2	0	No support	6xSAS +4xNVMe (BCQN)	2xSAS/SATA (B8MY)
H	1 or 2	10	4 (1:1)	6	2	2	0	0	0	Optional	6xSAS +2xAny +2xNVMe (BCQP)	None
I	2	12	6 (1:1)	6	2	2	0	0	2	No support	6xSAS +2xAny +2xNVMe (BCQP)	2xNVMe (B5VQ)
J	1 or 2	8	8 (1:1)	0	8	0	0	0	0	Optional	10xAny (BB3T)	None
K	1 or 2†	10	10 (1:1)	0	10	0	0	0	0	Optional	10xAny (BB3T)	None
L	2	12	10 (1:1)	0	10	0	0	2	0	No support	10xAny (BB3T)	2xSAS/SATA (B8MY)
M	2	12	12 (1:1)	0	10	0	0	0	2	No support	10xAny (BB3T)	2xNVMe (B5VQ)
N	2	10	10 (1:1)	0	0	10	0	0	0	Optional	10xNVMe (BCQQ)	None
O	2	12	10 (1:1)	0	0	10	0	2	0	No support	10xNVMe (BCQQ)	2xSAS/SATA (B8MY)
P	2	12	12 (1:1)	0	0	10	0	0	2	No support	10xNVMe (BCQQ)	2xNVMe (B5VQ)
Q	1	8	8 (1:1)	0	0	8	0	0	0	Optional	10xAny (BB3T)	None
R	2	16	16 (1:1)	0	0	0	16	0	0	No support	16xEDSFF (B981)	None

† The use of an Internal (CFF) controller or the use of more than 4x NVMe Some configurations require 2 processors. See Controller selections section for specifics.

Controller selections

This section helps you determine with storage adapter are supported for your desired drive bay configuration.

Tip for field support: Hover over the Configuration letter to see the TRD storage configurations that it relates to.

In the tables, the controllers are grouped as follows:

- RAID 8i corresponds to any of the following:
  - ThinkSystem RAID 530-8i PCIe 12Gb Adapter
  - ThinkSystem RAID 540-8i PCIe Gen4 12Gb Adapter
  - ThinkSystem RAID 930-8i 2GB Flash PCIe 12Gb Adapter
  - ThinkSystem RAID 940-8i 4GB Flash PCIe Gen4 12Gb Adapter
  - ThinkSystem RAID 940-8i 8GB Flash PCIe Gen4 12Gb Adapter
- RAID 5350/9350 8i corresponds to either of the following:
  - ThinkSystem RAID 5350-8i PCIe 12Gb Adapter
  - ThinkSystem RAID 9350-8i 2GB Flash PCIe 12Gb Adapter
- RAID x350 8i Int corresponds to either of the following:
  - ThinkSystem RAID 5350-8i PCIe 12Gb Internal Adapter
  - ThinkSystem RAID 9350-8i 2GB Flash PCIe 12Gb Internal Adapter
- RAID 16i corresponds to any of the following:
  - ThinkSystem RAID 530-16i PCIe 12Gb Adapter
  - ThinkSystem RAID 540-16i PCIe Gen4 12Gb Adapter
  - ThinkSystem RAID 930-16i 4GB Flash PCIe 12Gb Adapter
  - ThinkSystem RAID 940-16i 4GB Flash PCIe Gen4 12Gb Adapter
  - ThinkSystem RAID 940-16i 8GB Flash PCIe Gen4 12Gb Adapter
- RAID 16i Int corresponds to the following:
  - ThinkSystem RAID 940-16i 8GB Flash PCIe Gen4 12Gb Internal Adapter
- RAID x350 16i Int corresponds to the following:
  - ThinkSystem RAID 9350-16i 4GB Flash PCIe 12Gb Internal Adapter
- HBA 8i corresponds to the following:
  - ThinkSystem 430-8i SAS/SATA 12Gb HBA
  - ThinkSystem 440-8i SAS/SATA PCIe Gen4 12Gb HBA
- HBA 4350 8i corresponds to the following:
  - ThinkSystem 4350-8i SAS/SATA 12Gb HBA
- HBA 16i corresponds to the following:
  - ThinkSystem 430-16i SAS/SATA 12Gb HBA
  - ThinkSystem 440-16i SAS/SATA PCIe Gen4 12Gb HBA
- HBA 16i Int corresponds to the following:
  - ThinkSystem 440-16i SAS/SATA PCIe Gen4 12Gb Internal HBA
- OB SATA (onboard SATA) corresponds to the following in CTO orders:
  - On Board SATA Software RAID Mode, feature AVV0
- OB NVMe (onboard NVMe) corresponds to the following in CTO orders:
  - Non RAID NVMe, feature BC4V
  - Intel VROC (VMD NVMe RAID) Intel SSD Only, feature B9X7
  - Intel VROC (VMD NVMe RAID) Premium, feature B96G
- Retimer corresponds to the following:
  - ThinkSystem 4-Port PCIe Gen4 NVMe Retimer Adapter, 4C57A65446

3.5-inch chassis configurations

The following table lists the supported drive bay combinations for configurations with 3.5-inch front drive bays, plus the list of supported controller combinations supported by each of those drive bay combinations. Information about the controllers can be found in the Controllers for internal storage section.

Table 24. Drive bay combinations with 3.5-inch chassis (Blue cells = SAS/SATA, Red = NVMe) (S/S = SAS/SATA, Any = AnyBay)

Cfg	Front bays (3.5")		Rear bays (2.5")		Rear bays (7mm)	CPUs	Controller combinations (drive count) (F=Front, R=Rear)
	S/S 3.5"	Any 3.5"	S/S 2.5"	NVMe 2.5"			
A	4	0	0	0	Yes	1 or 2	OB SATA (4) (F)
					Yes	1 or 2	1x RAID/HBA 8i (4) (F)
					Yes	1 or 2	1x RAID 5350/9350/HBA 4350 8i (4) (F)
B	4	0	2	0	No	1 or 2	OB SATA (6) (F+R)
					No	1 or 2	1x RAID/HBA 8i (6) (F+R)
C	4	0	0	2	No	2	OB SATA (4) (F) + OB NVMe (2) (R)
					No	2	1x RAID/HBA 8i (4) (F) + OB NVMe (2) (R)
D	0	4	0	0	Yes	1 or 2	OB SATA (4) + OB NVMe (4) (F)
					Yes	1 or 2	1x RAID/HBA 8i (4) + OB NVMe (4) (F)
					Yes	1 or 2	1x RAID 940-8i Trimode-U.3 (4) (F)
E	0	4	2	0	No	1 or 2	OB SATA (6) + 4x OB NVMe (4) (F+R)
					No	1 or 2	1x RAID/HBA 8i (6) + 4x OB NVMe (4) (F+R)
F	0	4	0	2	No	2	OB SATA (4) + OB NVMe (6) (F+R)
					No	2	1x RAID/HBA 8i (4) + OB NVMe (6) (F+R)

* 7mm drive support is only via a field upgrade

2.5-inch chassis configurations

The following table lists the supported drive bay combinations for configurations with 2.5-inch front drive bays, plus the list of supported controller combinations supported by each of those drive bay combinations. Information about the controllers can be found in the Controllers for internal storage section.

Table 25. Drive bay combinations with 2.5-inch chassis (Blue = SAS/SATA, Red = NVMe, Purple = AnyBay) (S/S = SAS/SATA, Any = AnyBay)

Cfg	Front bays (2.5")				Rear bays (2.5")		Rear bays (7mm)	CPUs	Controller combinations (drive count) (F=Front, R=Rear)
	S/S 2.5"	Any 2.5"	NVMe 2.5"	EDSFF	S/S 2.5"	NVMe 2.5"			
A	4	0	0	0	0	0	Yes	1 or 2	OB SATA (4) (F)
							Yes	1 or 2	1x RAID/HBA 8i (4) (F)
B	8	0	0	0	0	0	Yes	1 or 2	OB SATA (8) (F)
							Yes	1 or 2	1x RAID/HBA 8i (8) (F)
							Yes	1 or 2	1x RAID/HBA 16i Int (8) (F)
							Yes	1 or 2	1x RAID x350 16i Int (8) (F)
							Yes	1 or 2	1x RAID x350 8i Int (8) (F)
							Yes	1 or 2	1x RAID 5350/9350/HBA 4350 8i (8) (F)
C	8	0	0	0	2	0	No	1 or 2	OB SATA (10) (F+R)
							No	1 or 2	1x RAID/HBA 8i (8) (F) + OB SATA (2) (R)
							No	1 or 2	1x RAID/HBA 16i Int (10) (F+R)
							No	1 or 2	1x RAID x350 16i Int (10) (F+R)
D	6	4	0	0	0	0	No	1 or 2	1x RAID/HBA 16i (10) + OB NVMe (4)
							Yes	2	1x RAID/HBA 16i Int (10) + OB NVMe (4)
							Yes	2	1x RAID x350 16i Int (10) + OB NVMe (4)
E	6	4	0	0	0	2	No	2	1x RAID/HBA 16i (10) + OB NVMe (6)
							No	2	1x RAID/HBA 16i Int (10) + OB NVMe (6)
							No	2	1x RAID x350 16i Int (10) + OB NVMe (6)
F	6	4	0	0	2	0	No	2	1x RAID/HBA 16i Int (12) + OB NVMe (4) (F+R)
							No	2	1x RAID x350 16i Int (12) + OB NVMe (4) (F+R)
G	6	0	4	0	2	0	No	1 or 2	OB SATA (8) + OB NVMe (4) (F+R)
H	6	2	2	0	0	0	Yes	1 or 2	OB SATA (8) + OB NVMe (4) (F)
							Yes	1 or 2	1x RAID/HBA 8i (8) + 4x OB NVMe (4) (F)
I	6	2	2	0	0	2	No	2	OB SATA (8) + OB NVMe (6) (F+R)
							No	2	1x RAID/HBA 8i (8) + 4x OB NVMe (6) (F+R)
J	0	8	0	0	0	0	Yes	1 or 2	1x RAID 940-8i Trimode-U.3 (8) (F)
							Yes	1	OB SATA (8) + OB NVMe (4) + 1x Retimer (4) (F)
							Yes	1	1x RAID/HBA 8i (8) + OB NVMe (4) + 1x Retimer (4) (F)
K	0	10	0	0	0	0	Yes	2	1x RAID 16i (10) + OB NVMe (10) (F)
							Yes	2	1x HBA 16i (10) + OB NVMe (10) (F)
							Yes*	1 or 2	1x RAID 940-16i Trimode-U.3 (10) (F)
L	0	10	0	0	2	0	No	2	1x RAID/HBA 16i (12) (F+R) + OB NVMe (10) (F)
M	0	10	0	0	0	2	No	2	1x RAID/HBA 16i (10) (F) + OB NVMe (12) (F+R)
N	0	0	10	0	0	0	Yes	2	OB NVMe (10) (F)
O	0	0	10	0	2	0	No	2	OB NVMe (10) (F) + OB SATA (2) (R)
P	0	0	10	0	0	2	No	2	OB NVMe (12) (F+R)
Q	0	0	8	0	0	0	Yes	1	OB NVMe (4) + 1x Retimer (4) (F)
R	0	0	0	16	0	0	No	2	OB NVMe (12) + 1x Retimer (4) (F)

* 7mm drive support is only via a field upgrade

Field upgrades

Topics in this section:

- Backplane kits and cable kits
- Upgrades to Internal (CFF) 5350 or 9350 RAID adapter
- Contents of cable kits
- 2.5-inch drive bay fillers

Backplane kits and cable kits

The SR630 V2 is orderable without drive bays, allowing you to add a backplane, cabling and controllers as field upgrades. Rear backplane kits included cables, however for front drive bays, the backplane kits do not include cables and must be ordered separately. The following table summarizes the option part numbers you will need to order for each available drive configuration.

For details about this backplane kits and cable kits, see the following page (search for the kit by name): https://serveroption.lenovo.com/

Tip: There is no upgrade path to add drive bays if the SR630 V2 already has a backplane, without removing the existing backplane. For example, you cannot upgrade an 8x 2.5-inch drive bay to 10 bays without first removing the existing backplane.

Table 26. Front drive bay field upgrades for servers without drive bays

Desired drive configuration (starting from zero bays)	Backplane and cable kits required
Front drive bays - 3.5-inch	
4x SAS/SATA 3.5-inch	1. **4XH7A09907**, ThinkSystem SR630 V2/SR645 4x3.5" SAS/SATA Backplane Option Kit 2. **4X97A59980**, ThinkSystem SR630 V2 4x3.5" SAS/SATA Backplane Cable Kit v2 or **4X97A59791**, ThinkSystem SR630 V2 4x3.5" SAS/SATA Backplane Cable Kit
4x AnyBay 3.5-inch	1. **4XH7A09908**, ThinkSystem SR630 V2/SR645 4x3.5" AnyBay Backplane Option Kit 2. **4X97A59981**, ThinkSystem SR630 V2 4x3.5" AnyBay Backplane Cable Kit v2 or **4X97A59792**, ThinkSystem SR630 V2 4x3.5" AnyBay Backplane Cable Kit
Front drive bays - 2.5-inch	
4x SAS/SATA 2.5-inch	1. **4XH7A09916**, ThinkSystem SR645 4x2.5" SAS/SATA Backplane Option Kit 2. **4X97A59799**, ThinkSystem SR630 V2 4x2.5" SAS/SATA Backplane Cable Kit
16x EDSFF	1. No field upgrade to this configuration
8x SAS/SATA 2.5-inch	1. **4XH7A09909**, ThinkSystem SR630 V2/SR645 8x2.5" SAS/SATA Backplane Option Kit 2. **4X97A59982**, ThinkSystem SR630 V2 8x2.5" SAS/SATA Backplane Cable Kit v2 or **4X97A59793**, ThinkSystem SR630 V2 8x2.5" SAS/SATA Backplane Cable Kit
6x SAS/SATA + 4x AnyBay 2.5-inch	1. **4XH7A09913**, ThinkSystem SR630 V2/SR645 6xSATA/SAS, 4xAnyBay 2.5" Backplane Option Kit 2. **4X97A59985**, ThinkSystem SR630 V2 6xSAS/SATA, 4xAnybay 2.5" BP SAS/SATA Cable Kit v2 or **4X97A59796**, ThinkSystem SR630 V2 6xSAS/SATA, 4xAnybay 2.5" BP SAS/SATA Cable Kit 3. **4X97A59986**, ThinkSystem SR630 V2 6xSAS/SATA, 4xAnybay 2.5" BP NVMe Cable Kit v2 or **4X97A59797**, ThinkSystem SR630 V2 6xSAS/SATA, 4xAnybay 2.5" BP NVMe Cable Kit
6x SAS/SATA + 4x NVMe 2.5-inch	1. **4XH7A61062**, ThinkSystem SR630 V2/SR645 6xSATA/SAS, 4xNVMe 2.5" Backplane Option Kit 2. **4X97A59986**, ThinkSystem SR630 V2 6xSAS/SATA, 4xAnybay 2.5" BP NVMe Cable Kit v2 or **4X97A59797**, ThinkSystem SR630 V2 6xSAS/SATA, 4xAnybay 2.5" BP NVMe Cable Kit

Desired drive configuration (starting from zero bays)	Backplane and cable kits required
6x SAS/SATA + 2x AnyBay + 2x NVMe 2.5-inch	1. **4XH7A61063**, ThinkSystem SR630 V2/SR645 2.5" 6xSAS/SATA, 2xAnyBay, 2xNVMe 2.5" Backplane Option Kit 2. **4X97A59985**, ThinkSystem SR630 V2 6xSAS/SATA, 4xAnybay 2.5" BP SAS/SATA Cable Kit v2 or **4X97A59796**, ThinkSystem SR630 V2 6xSAS/SATA, 4xAnybay 2.5" BP SAS/SATA Cable Kit 3. **4X97A59986**, ThinkSystem SR630 V2 6xSAS/SATA, 4xAnybay 2.5" BP NVMe Cable Kit v2 or **4X97A59797**, ThinkSystem SR630 V2 6xSAS/SATA, 4xAnybay 2.5" BP NVMe Cable Kit
10x AnyBay 2.5-inch	1. **4XH7A09910**, ThinkSystem SR630 V2/SR645 10x2.5" AnyBay Backplane Option Kit 2. **4X97A59983**, ThinkSystem SR630 V2 10x2.5" Anybay BP SAS/SATA Cable Kit v2 or **4X97A59794**, ThinkSystem SR630 V2 10x2.5" Anybay BP SAS/SATA Cable Kit 3. **4X97A59984**, ThinkSystem SR630 V2 10x2.5" Anybay BP NVMe Cable Kit v2 or **4X97A59795**, ThinkSystem SR630 V2 10x2.5" Anybay BP NVMe Cable Kit
10x NVMe 2.5-inch	1. **4XH7A61060**, ThinkSystem SR630 V2/SR645 10x2.5" NVMe Backplane Option Kit 2. **4X97A59984**, ThinkSystem SR630 V2 10x2.5" Anybay BP NVMe Cable Kit v2 or **4X97A59795**, ThinkSystem SR630 V2 10x2.5" Anybay BP NVMe Cable Kit
8x AnyBay 2.5-inch using a Retimer adapter	1. **4XH7A09910**, ThinkSystem SR630 V2/SR645 10x2.5" AnyBay Backplane Option Kit 2. **4X97A59983**, ThinkSystem SR630 V2 10x2.5" Anybay BP SAS/SATA Cable Kit v2 or **4X97A59794**, ThinkSystem SR630 V2 10x2.5" Anybay BP SAS/SATA Cable Kit 3. **4X97A59984**, ThinkSystem SR630 V2 10x2.5" Anybay BP NVMe Cable Kit v2 or **4X97A59795**, ThinkSystem SR630 V2 10x2.5" Anybay BP NVMe Cable Kit 4. **4X97A59988**, ThinkSystem SR630 V2 PCIe Gen4 NVMe Retimer Adapter Cable Kit
8x NVMe 2.5-inch using a Retimer adapter	1. **4XH7A61060**, ThinkSystem SR630 V2/SR645 10x2.5" NVMe Backplane Option Kit 2. **4X97A59988**, ThinkSystem SR630 V2 PCIe Gen4 NVMe Retimer Adapter Cable Kit
Rear drive bays - 2.5-inch	
2x SAS/SATA 2.5-inch	1. **4XH7A61125**, ThinkSystem SR630 V2 Rear 2x2.5" SAS/SATA Backplane Option Kit v2 or **4XH7A60975**, ThinkSystem SR630 V2 Rear 2x2.5" SAS/SATA Backplane Option Kit
2x NVMe 2.5-inch	1. **4XH7A80459**, ThinkSystem SR630 V2 Rear 2x2.5" NVMe Backplane Option Kit v2 or **4XH7A60974**, ThinkSystem SR630 V2 Rear 2x2.5" NVMe Backplane Option Kit
Rear drive bays - 7mm	
2x SATA 7mm	1. **4XH7A80461**, ThinkSystem SR630 V2 Rear 2x7mm SATA RAID Enablement Kit v2 or **4XH7A60977**, ThinkSystem SR630 V2 Rear 2x7mm SATA RAID Enablement Kit
2x NVMe 7mm	1. **4XH7A80462**, ThinkSystem SR630 V2 Rear 2x7mm NVMe RAID Enablement Kit v2 or **4XH7A60976**, ThinkSystem SR630 V2 Rear 2x7mm NVMe RAID Enablement Kit

When adding front drive bays, you will also need to add the appropriate storage controller(s). If you are selecting an RAID controller with a flash unit, you will also need to order a supercap holder kit. Consult the tables in the Controller selections section to determine what controller sections are supported and what additional controllers you will need. Controllers are described in the Controllers for internal storage section.

Upgrades to Internal (CFF) 5350 or 9350 RAID adapter

It is also supported to upgrade a server from an onboard SATA controller to an internal (CFF) RAID adapter, without changing any backplanes. For most configurations where a CFF adapter is added in the field, the cable kits listed in the preceding table include all the necessary cables. The only exception to this is when you are installing a 5350 or 9350 CFF adapter and an 8x 2.5-inch SAS/SATA backplane, which requires an extra cable.

When adding a 5350 or 9350 CFF adapter plus an 8x 2.5-inch SAS/SATA backplane, you will *also* need to order the cable kit listed in the following table in addition to the cable kits listed in the preceding table.

Tip: This cable is not needed when adding a 940 or 440 CFF adapter, and is not needed if you are adding a 5350 or 9350 CFF adapter without also adding the 8x 2.5-inch SAS/SATA backplane.

Table 27. Cable needed for upgrades of a 5350 or 9350 CFF adapter plus an 8x 2.5-inch SAS/SATA backplane

Part number	Description
4X97A86183	ThinkSystem SR630V2 x350 Internal RAID Adapter Cable Kit

For details about this cable kit, see the following page:
https://serveroption.lenovo.com/cable_kit_options/cable_kit_single_cpu_sr630v2_internal_raid_adapter

Contents of cable kits

The following table lists the cables included in each front drive bay cable kit.

Table 28. Cable option kits for front drive bays

Part number	Description and contents **CFF (compact form factor) refers to the internal cabled RAID adapter or HBA** **SFF (small form factor) refers to standard PCIe RAID adapters or HBA** **G3 refers to PCIe 3.0; G4 refers to PCIe 4.0**
4X97A59980	ThinkSystem SR630 V2 4x3.5" SAS/SATA Backplane Cable Kit v2 • SBB7A21244 - SAS/SATA Gen4 signal cable, 560mm • SBB7A21218 - MB to 4x3.5 BP G4 Cable • SBB7A21224 - 1U Front BP SATA/SAS cable • SBB7A44799 - 1U3.5 BP power cable
4X97A59791	ThinkSystem SR630 V2 4x3.5" SAS/SATA Backplane Cable Kit • SBB7A21244 - SAS/SATA Gen4 signal cable, 560mm • SBB7A21218 - MB to 4x3.5 BP G4 Cable • SBB7A21224 - 1U Front BP SATA/SAS cable • SBB7A21228 - BP power cable
4X97A59981	ThinkSystem SR630 V2 4x3.5" AnyBay Backplane Cable Kit v2 • SBB7A21244 - SAS/SATA Gen4 signal cable, 560mm • SBB7A21224 - 1U Front BP SATA/SAS cable • SBB7A21218 - MB to 4x3.5 BP G4 Cable • SBB7A20303 - MB to 4X3.5 AnyBay BP Cable • SBB7A44799 - 1U3.5 BP power cable
4X97A59792	ThinkSystem SR630 V2 4x3.5" AnyBay Backplane Cable Kit • SBB7A21244 - SAS/SATA Gen4 signal cable, 560mm • SBB7A21224 - 1U Front BP SATA/SAS cable • SBB7A21218 - MB to 4x3.5 BP G4 Cable • SBB7A20303 - MB to 4X3.5 AnyBay BP Cable • SBB7A21228 - BP power cable
4X97A59982	ThinkSystem SR630 V2 8x2.5" SAS/SATA Backplane Cable Kit v2 • SBB7A24057 - SFF 2.5BP SAS Gen3 cable • SBB7A21250 - SAS signal cable, 860/690mm • SBB7A21240 - CFF G4 cable combo 110mm/200mm • SBB7A20305 - cable for MB to CFF RAID • SBB7A21255 - 10x2.5 AnyBay BP G4 short • SBB7A44796 - 1U MB to CFF RAID • SBB7A44797 - 1U 8x2.5/6+4 x2.5 BP Power

Part number	Description and contents CFF (compact form factor) refers to the internal cabled RAID adapter or HBA SFF (small form factor) refers to standard PCIe RAID adapters or HBA G3 refers to PCIe 3.0; G4 refers to PCIe 4.0
4X97A59793	ThinkSystem SR630 V2 8x2.5" SAS/SATA Backplane Cable Kit • SBB7A24057 - SFF 2.5BP SAS Gen3 cable • SBB7A21250 - SAS signal cable, 860/690mm • SBB7A21240 - CFF G4 cable combo 110mm/200mm • SBB7A20305 - cable for MB to CFF RAID • SBB7A21230 - 1U MB to CFF RAID • SBB7A21255 - 10x2.5 AnyBay BP G4 short • SBB7A21227 - 1U 8x2.5/6+4 x2.5 BP Power cable
4X97A59983	ThinkSystem SR630 V2 10x2.5" Anybay BP SAS/SATA Cable Kit v2 • SBB7A24057 - SFF 2.5BP SAS Gen3 cable • SBB7A21255 - 10x2.5 AnyBay BP G4 short • SBB7A21251 - SAS/SATA Gen4 signal cable, 570mm • SBB7A21250 - SFF G4 SAS signal cable, 860/690mm • SBB7A21244 - SAS/SATA Gen4 signal cable, 560mm • SBB7A44800 - 1U10x2.5 BP power cable • SBB7A49837 - SR630 V2 850mm SAS/SATA cable • SBB7A49801 - SR630 V2 650mm SAS/SATA cable
4X97A59794	ThinkSystem SR630 V2 10x2.5" Anybay BP SAS/SATA Cable Kit • SBB7A24057 - SFF 2.5BP SAS Gen3 cable • SBB7A21255 - 10x2.5 AnyBay BP G4 short • SBB7A21251 - SAS/SATA Gen4 signal cable, 570mm • SBB7A21250 - SFF G4 SAS signal cable, 860/690mm • SBB7A21229 - 1U 10x2.5 BP power cable • SBB7A21244 - SAS/SATA Gen4 signal cable, 560mm • SBB7A49837 - SR630 V2 850mm SAS/SATA cable • SBB7A49801 - SR630 V2 650mm SAS/SATA cable
4X97A59984	ThinkSystem SR630 V2 10x2.5" Anybay BP NVMe Cable Kit v2 • SBB7A44800 - 1U10x2.5 BP power cable • SBB7A20307 - cable for 10X2.5" AnyBay BP
4X97A59795	ThinkSystem SR630 V2 10x2.5" Anybay BP NVMe Cable Kit • SBB7A21229 - 1U 10x2.5 BP power cable • SBB7A20307 - cable for 10X2.5" AnyBay BP
4X97A59985	ThinkSystem SR630 V2 6xSAS/SATA, 4xAnybay 2.5" BP SAS/SATA Cable Kit v2 • SBB7A24057 - SFF 2.5BP SAS Gen3 cable • SBB7A21255 - 10x2.5 AnyBay BP G4 short • SBB7A21251 - SAS/SATA Gen4 signal cable, 570mm • SBB7A21250 - SFF G4 SAS signal cable, 860/690mm • SBB7A21242 - CFF G4 SAS/SATA Gen4 signal cable, 260mm • SBB7A21240 - CFF G4 cable combo 110mm/200mm • SBB7A44796 - 1U MB to CFF RAID • SBB7A21224 - 1U Front BP SATA/SAS cable • SBB7A20306 - cable for MB to CFF RAID • SBB7A20305 - cable for MB to CFF RAID • SBB7A44797 - 1U 8x2.5/6+4 x2.5 BP Power

Part number	Description and contents CFF (compact form factor) refers to the internal cabled RAID adapter or HBA SFF (small form factor) refers to standard PCIe RAID adapters or HBA G3 refers to PCIe 3.0; G4 refers to PCIe 4.0
4X97A59796	ThinkSystem SR630 V2 6xSAS/SATA, 4xAnybay 2.5" BP SAS/SATA Cable Kit • SBB7A24057 - SFF 2.5BP SAS Gen3 cable • SBB7A21255 - 10x2.5 AnyBay BP G4 short • SBB7A21251 - SAS/SATA Gen4 signal cable, 570mm • SBB7A21250 - SFF G4 SAS signal cable, 860/690mm • SBB7A21242 - CFF G4 SAS/SATA Gen4 signal cable, 260mm • SBB7A21240 - CFF G4 cable combo 110mm/200mm • SBB7A21230 - 1U MB to CFF RAID • SBB7A21224 - 1U Front BP SATA/SAS cable • SBB7A20306 - cable for MB to CFF RAID • SBB7A20305 - cable for MB to CFF RAID • SBB7A21227 - 1U 8x2.5/6+4 x2.5 BP Power cable
4X97A59986	ThinkSystem SR630 V2 6xSAS/SATA, 4xAnybay 2.5" BP NVMe Cable Kit v2 • SBB7A44796 - 1U MB to CFF RAID • SBB7A44797 - 1U 8x2.5/6+4 x2.5 BP Power • SBB7A20306 - cable for MB to CFF RAID • SBB7A20305 - cable for MB to CFF RAID • SBB7A20304 - 6X2.5" SAS/SATA + 4X2.5 BP cable
4X97A59797	ThinkSystem SR630 V2 6xSAS/SATA, 4xAnybay 2.5" BP NVMe Cable Kit • SBB7A21230 - 1U MB to CFF RAID • SBB7A21227 - 1U 8x2.5/6+4 x2.5 BP Power cable • SBB7A20306 - cable for MB to CFF RAID • SBB7A20305 - cable for MB to CFF RAID • SBB7A20304 - 6X2.5" SAS/SATA + 4X2.5 BP cable
4X97A59988	ThinkSystem SR630 V2 PCIe Gen4 NVMe Retimer Adapter Cable Kit • SBB7A49788 - SR630 V2 780mm PCIe cable • SBB7A49802 - SR630 V2 920mm PCIe cable

2.5-inch drive bay fillers

Backplane option kits include the necessary drive bay fillers, however if needed, additional blanks can be ordered as listed in the following table.

Table 29. Drive bay fillers for 2.5-inch bays

Part number	Description
4XH7A99569	ThinkSystem 2.5" 1x1 HDD Filler by 8 units (contains 8x single drive-bay fillers)

RAID flash power module (supercap) support

If you plan to add one of the RAID adapters that includes a RAID flash power module (supercap) as a field upgrade, then you will also need to order a Supercap installation kit for the power module. For CTO orders, the components in the installation kit are automatically derived when you select the RAID adapter. The adapters that this applies to are as follows:

- ThinkSystem RAID 9350-8i 2GB Flash PCIe 12Gb Adapter
- ThinkSystem RAID 930-8i 2GB Flash PCIe 12Gb Adapter
- ThinkSystem RAID 930-16i 4GB Flash PCIe 12Gb Adapter
- ThinkSystem RAID 940-8i 4GB Flash PCIe Gen4 12Gb Adapter
- ThinkSystem RAID 940-8i 8GB Flash PCIe Gen4 12Gb Adapter
- ThinkSystem RAID 940-16i 8GB Flash PCIe Gen4 12Gb Adapter
- ThinkSystem RAID 940-16i 8GB Flash PCIe Gen4 12Gb Internal Adapter

There are up to three possible locations for supercaps, depending on the front drive bays (2.5-inch or 3.5-inch) and the size of the processor heatsinks. Details are summarized in the following table. Location references are shown in the figure below.

Table 30. Supercap support

Front drive configuration	Processor heatsinks	Number of adapters & supercaps	Location of supercaps
2.5-inch	Standard	3	1. Front of server behind operator panel ❶ 2. Mounted on air baffle ❷ 3. Mounted on air baffle ❷
	High Performance	1	1. Front of server behind operator panel ❶
3.5-inch	Standard	2	1. Mounted on air baffle ❷ 2. Mounted on air baffle ❷
	High Performance	1	1. Installed in slot 3 attached to Riser 2 ❸

The locations where supercaps are installed is shown in the following figure.

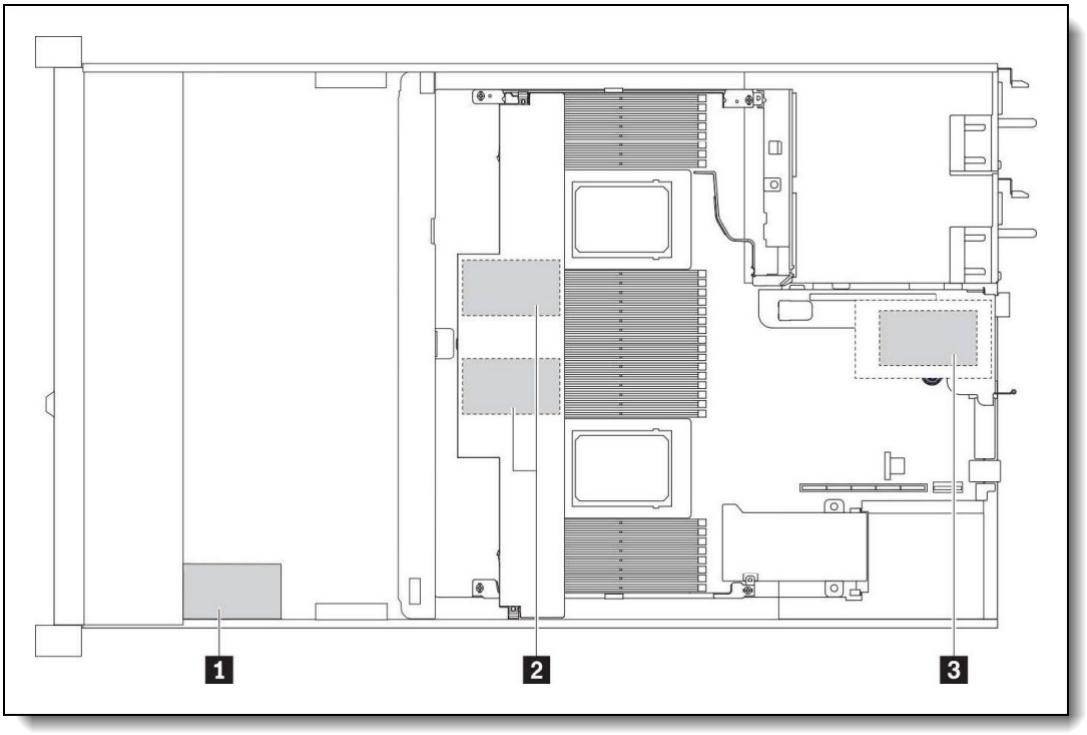

Figure 10. Location of the supercaps in the SR630 V2

When adding a RAID adapter and supercap as a field upgrade, order the supercap installation kit list listed in the following table.

Table 31. RAID Flash Power Module installation kits

Part number	Feature code	Description	Maximum supported
4M17A61304	BK70	ThinkSystem V3 1U Supercap Holder Kit (For use in position 1 at the front of the server)	1
4M17A61305	BK5T	ThinkSystem SR630 V2 Supercap Holder Kit for PCIe Slot (Low profile adapter form factor for use in slot 3, position 3)	1

M.2 drives

The SR630 V2 supports one or two M.2 form-factor SATA or NVMe drives for use as an operating system boot solution or as additional storage.

The M.2 drives install into an M.2 module which is mounted horizontally in the server in front of the fans as shown in the Internal view of the server. In configurations with 2.5-inch front drive bays, the M.2 module is position between the drive bays and the fans. In configurations with 3.5-inch front drive bays, the M.2 module is mounted on top of the front drive bays.

M.2 is not supported with a configuration of 16x EDSFF NVMe drives.

There are three M.2 modules supported, as listed in the following table.

M. 2 and 7mm are mutually exclusive: The SR630 V2 supports 7mm drives or M.2 but not not at the same time, since they use the same connector on the system board.

Table 32. M.2 modules

Part number	Feature code	Description	SATA drives	NVMe drives	RAID	Maximum supported
4Y37A09739	B5XH	ThinkSystem M.2 SATA 2-Bay RAID Enablement Kit	Yes	No	Yes	1
4Y37A09750	B8P9	ThinkSystem M.2 NVMe 2-Bay RAID Enablement Kit	No	Yes	Yes	1
4Y37A09738	B5XJ	ThinkSystem M.2 SATA/NVMe 2-Bay Enablement Kit	Yes	Yes	VROC	1

Supported drives are listed in the Internal drive options section.

The M.2 SATA 2-Bay RAID Enablement Kit has the following features:

- Supports one or two SATA M.2 drives
- Support 42mm, 60mm, 80mm and 110mm drive form factors (2242, 2260, 2280 and 22110)
- RAID support via an onboard Marvell 88SE9230 SATA RAID Controller
- Support JBOD, RAID-0 and RAID-1 (RAID support requires two M.2 drives)
- PCIe 2.0 x2 host interface; 6Gbps SATA connection to the drives
- Management and configuration support via UEFI and OS-based tools
- Supports monitoring and reporting of events and temperature through I2C
- Firmware update via Lenovo firmware update tools

The M.2 NVMe 2-Bay RAID Enablement Kit has the following features:

- Supports one or two NVMe M.2 drives
- Support 42mm, 60mm, 80mm and 110mm drive form factors (2242, 2260, 2280 and 22110)
- RAID support via an onboard Marvell 88NR2241 NVMe RAID Controller
- With 1 drive, supports single-drive RAID-0
- With 2 drives, supports 2-drive RAID-0, 2-drive RAID-1, or two single-drive RAID-0 arrays
- PCIe 3.0 x2 host interface; PCIe 3.0 x1 connection to each drive
- Management and configuration support via UEFI and OS-based tools
- Supports monitoring and reporting of events and temperature through I2C
- Firmware update via Lenovo firmware update tools

The M.2 SATA/NVMe 2-Bay Enablement Kit has the following features:

- Supports one or two M.2 drives, either SATA or NVMe
- When two drives installed, they must be either both SATA or both NVMe
- Support 42mm, 60mm, 80mm and 110mm drive form factors (2242, 2260, 2280 and 22110)
- JBOD native support; no built-in RAID support (RAID can be enabled via Intel VROC)
- Either 6Gbps SATA or PCIe 3.0 x1 interface to the drives depending on the drives installed
- Supports monitoring and reporting of events and temperature through I2C
- Firmware update via Lenovo firmware update tools

For field upgrades, the SR630 V2 also requires an additional M.2 cable kit. Ordering information is listed in the following table.

Table 33. M.2 Cable for field upgrades

Part number	Description
4X97A59826	M.2 Module Cable • 750mm signal cable

For further details about M.2 components, see the ThinkSystem M.2 Drives and M.2 Adapters product guide: https://lenovopress.com/lp0769-thinksystem-m2-drives-adapters

7mm drives

The SR630 V2 supports two 7mm drives, either both SATA or both NVMe, at the rear of the server. These drives go in place of PCIe slot 3 as shown in the following figure.

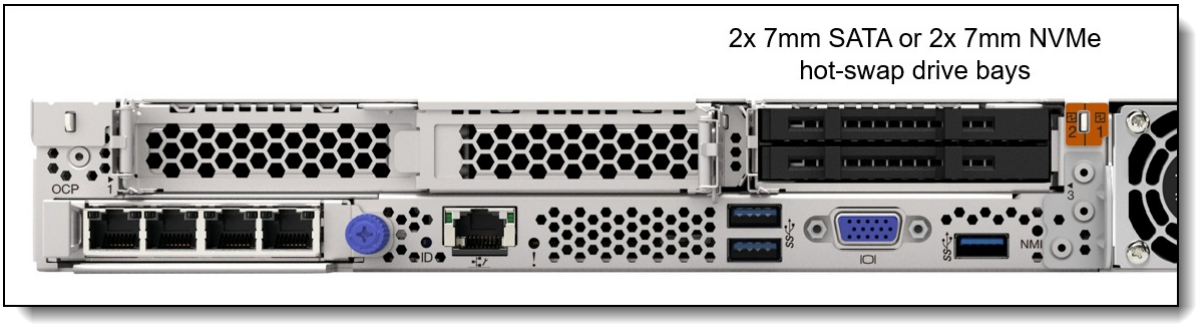

Figure 11. 7mm drive bays

The following table lists the ordering information for the 7mm drive bays.

M. 2 and 7mm are mutually exclusive: The SR630 V2 supports 7mm drives or M.2 but not not at the same time, since they use the same connector on the system board.

Table 34. 7mm rear drive bays

Part number	Feature code	Description	Maximum supported
4XH7A80461	BA1R	ThinkSystem SR630 V2 Rear 2x7mm SATA RAID Enablement Kit v2	1
4XH7A60977	BA1R	ThinkSystem SR630 V2 Rear 2x7mm SATA RAID Enablement Kit	1
4XH7A80462	B8Q2	ThinkSystem SR630 V2 Rear 2x7mm NVMe RAID Enablement Kit v2	1
4XH7A60976	B8Q2	ThinkSystem SR630 V2 Rear 2x7mm NVMe RAID Enablement Kit	1

Each drive bay kit supports 1 or 2 drives and includes an integrated controller providing RAID functions.

The SATA RAID Enablement Kit has the following features:

- Supports 1 or 2 SATA hot-swap drives; drives are 7mm high and 2.5-inches wide
- Integrated controller based on the Marvell 88SE9230 SATA RAID Controller
- PCIe 2.0 x2 host interface to the server system board
- Provides 6 Gbps SATA connectivity to the drives
- Supports JBOD, RAID-0 and RAID-1
- Management and configuration support via UEFI and OS-based tools
- Supports monitoring and reporting of events and temperature through I2C
- Firmware update via Lenovo firmware update tools

The NVMe RAID Enablement Kit has the following features:

- Supports 1 or 2 NVMe hot-swap drives; drives are 7mm high and 2.5-inches wide
- Integrated controller based on the Marvell 88NR2241 NVMe RAID Controller
- PCIe 3.0 x2 host interface to the server system board
- Provides PCIe 3.0 x1 connectivity to each drive
- With 1 drive, supports single-drive RAID-0
- With 2 drives, supports 2-drive RAID-0, 2-drive RAID-1, or two single-drive RAID-0 arrays
- Management and configuration support via UEFI and OS-based tools
- Supports monitoring and reporting of events and temperature through I2C
- Firmware update via Lenovo firmware update tools

The following figure shows the ThinkSystem 1U 7mm Drive Kit w/ NVMe RAID.

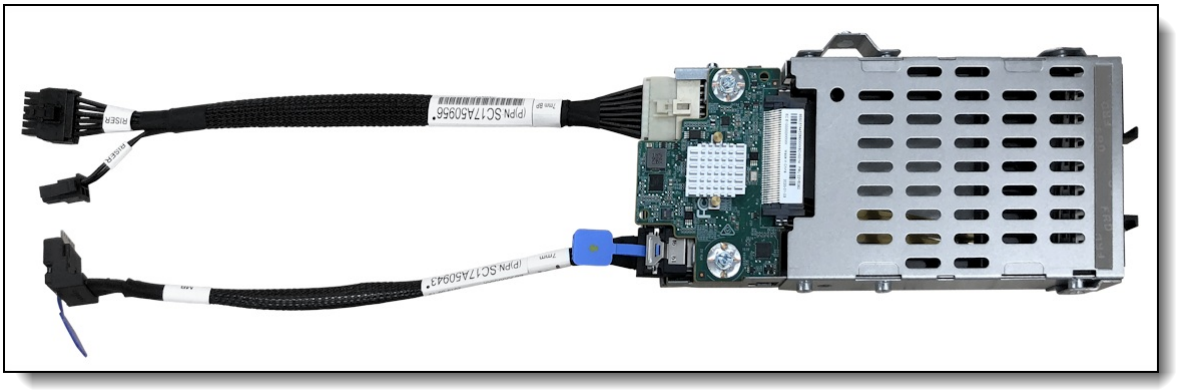

Figure 12. ThinkSystem 1U 7mm Drive Kit w/ NVMe RAID

EDSFF drives

The SR630 V2 supports EDSFF (Enterprise & Datacenter SSD Form Factor) drives with the E1.S (short) form factor. Up to 16 hot-swap EDSFF drives can be installed in the server.

CTO only: EDSFF drive bays are only available in the SR630 V2 in factory (CTO) orders. EDSFF drive bays are not available as field upgrades.

EDSFF drives are a new type of NVMe solid-state drive and have the following characteristics:

- NVMe SSD with PCIe 4.0 x4 host interface
- Hot-swap drive tray
- Install vertically in the server
- E1.S form factor defined by SNIA specification SFF-TA-1006
- 112 mm (4.4 inches) long x 32 mm (1.2 inches) tall

A single EDSFF with a ThinkSystem hot-swap tray is shown in the following figure.



Figure 13. EDSFF E1.S form factor drive with hot-swap tray

The SR630 V2 supports 16x EDSFF drives, installed in four bays each with four EDSFF drives as shown in the following figure. EDSFF drives are supported with or without the integrated diagnostics panel.

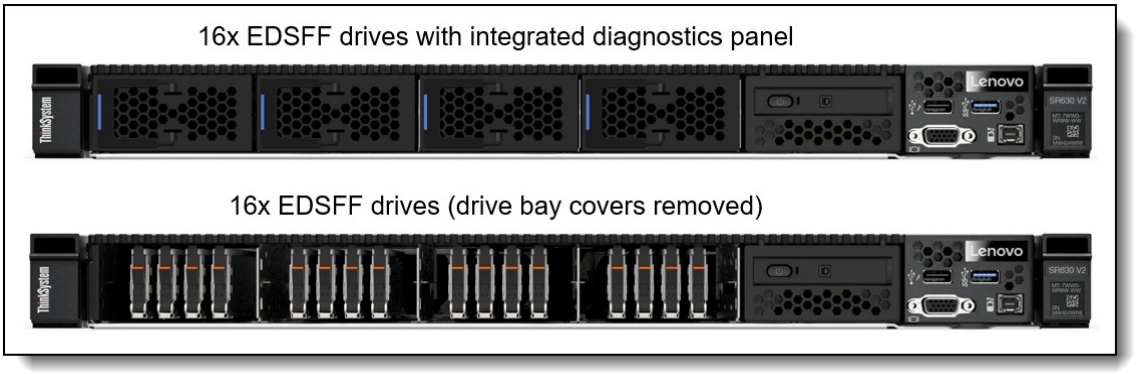

Figure 14. SR630 V2 EDSFF drive bays

SED encryption key management with SKLM

The server supports self-encrypting drives (SEDs) as listed in the Internal drive options section. To effectively manage a large deployment of these drives in Lenovo servers, IBM Security Key Lifecycle Manager (SKLM) offers a centralized key management solution.

A Lenovo Feature on Demand (FoD) upgrade is used to enable this SKLM support in the management processor of the server. The following table lists the part numbers and feature codes for the upgrades.

Table 35. FoD upgrades for SKLM support

Part number	Feature code	Description
Security Key Lifecycle Manager - FoD (United States, Canada, Asia Pacific, and Japan)		
00D9998	A5U1	SKLM for System x/ThinkSystem w/SEDs - FoD per Install with 1 year S&S
00D9999	AS6C	SKLM for System x/ThinkSystem w/SEDs - FoD per Install with 3 year S&S
Security Key Lifecycle Manager - FoD (Latin America, Europe, Middle East, and Africa)		
00FP648	A5U1	SKLM for System x/ThinkSystem w/SEDs - FoD per Install with 1 year S&S
00FP649	AS6C	SKLM for System x/ThinkSystem w/SEDs - FoD per Install with 3 year S&S

The IBM Security Key Lifecycle Manager software is available from Lenovo using the ordering information listed in the following table.

Table 36. IBM Security Key Lifecycle Manager licenses

Part number	Feature	Description
SKLM Basic Edition		
7S0A007FWW	S874	IBM Security Key Lifecycle Manager Basic Edition Install License + SW Subscription & Support 12 Months
7S0A008VWW	SDJR	IBM Security Key Lifecycle Manager Basic Edition Install License + SW Subscription & 3 Years Of Support
7S0A008WWW	SDJS	IBM Security Key Lifecycle Manager Basic Edition Install License + SW Subscription & 4 Years Of Support
7S0A008XWW	SDJT	IBM Security Key Lifecycle Manager Basic Edition Install License + SW Subscription & 5 Years Of Support
SKLM For Raw Decimal Terabyte Storage		
7S0A007HWW	S876	IBM Security Key Lifecycle Manager For Raw Decimal Terabyte Storage Resource Value Unit License + SW Subscription & Support 12 Months

Part number	Feature	Description
7S0A008YWW	SDJU	IBM Security Key Lifecycle Manager For Raw Decimal Terabyte Storage Resource Value Unit License + SW Subscription & 3 Years Of Support
7S0A008ZWW	SDJV	IBM Security Key Lifecycle Manager For Raw Decimal Terabyte Storage Resource Value Unit License + SW Subscription & 4 Years Of Support
7S0A0090WW	SDJW	IBM Security Key Lifecycle Manager For Raw Decimal Terabyte Storage Resource Value Unit License + SW Subscription & 5 Years Of Support
SKLM For Raw Decimal Petabyte Storage		
7S0A007KWW	S878	IBM Security Key Lifecycle Manager For Raw Decimal Petabyte Storage Resource Value Unit License + SW Subscription & Support 12 Months
7S0A0091WW	SDJX	IBM Security Key Lifecycle Manager For Raw Decimal Petabyte Storage Resource Value Unit License + SW Subscription & 3 Years Of Support
7S0A0092WW	SDJY	IBM Security Key Lifecycle Manager For Raw Decimal Petabyte Storage Resource Value Unit License + SW Subscription & 4 Years Of Support
7S0A0093WW	SDJZ	IBM Security Key Lifecycle Manager For Raw Decimal Petabyte Storage Resource Value Unit License + SW Subscription & 5 Years Of Support
SKLM For Usable Decimal Terabyte Storage		
7S0A007MWW	S87A	IBM Security Key Lifecycle Manager For Usable Decimal Terabyte Storage Resource Value Unit License + SW Subscription & Support 12 Months
7S0A0094WW	SDK0	IBM Security Key Lifecycle Manager For Usable Decimal Terabyte Storage Resource Value Unit License + SW Subscription & 3 Years In Support
7S0A0095WW	SDK1	IBM Security Key Lifecycle Manager For Usable Decimal Terabyte Storage Resource Value Unit License + SW Subscription & 4 Years In Support
7S0A0096WW	SDK2	IBM Security Key Lifecycle Manager For Usable Decimal Terabyte Storage Resource Value Unit License + SW Subscription & 5 Years In Support
SKLM For Usable Decimal Petabyte Storage		
7S0A007PWW	S87C	IBM Security Key Lifecycle Manager For Usable Decimal Petabyte Storage Resource Value Unit License + SW Subscription & Support 12 Months
7S0A0097WW	SDK3	IBM Security Key Lifecycle Manager For Usable Decimal Petabyte Storage Resource Value Unit License + SW Subscription & 3 Years Of Support
7S0A0098WW	SDK4	IBM Security Key Lifecycle Manager For Usable Decimal Petabyte Storage Resource Value Unit License + SW Subscription & 4 Years Of Support
7S0A0099WW	SDK5	IBM Security Key Lifecycle Manager For Usable Decimal Petabyte Storage Resource Value Unit License + SW Subscription & 5 Years Of Support

Controllers for internal storage

The SR630 V2 offers a variety of controller options for internal drives:

- For 2.5-inch, 3.5-inch drives and EDSFF drives:
  - Onboard SATA ports with software RAID support (Intel VROC SATA RAID, formerly known as Intel RSTe)
  - Onboard NVMe ports with software RAID support (Intel VROC NVMe RAID)
  - RAID adapters and HBAs for SAS/SATA drives (RAID 940-16i also supports NVMe)
  - NVMe Switch adapter for NVMe drives
- For 7mm drive bays in the rear of the server (see the 7mm drives section)
  - SATA controller integrated into the 7mm drive bay enclosure
  - NVMe controller integrated into the 7mm drive bay enclosure
- For M.2 drives internal to the server (see M.2 drives section)
  - SATA controller integrated on the M.2 SATA 2-Bay RAID Enablement Kit
  - NVMe controller integrated on the M.2 NVMe 2-Bay RAID Enablement Kit

As well as supporting RAID adapters and HBAs that install in a PCIe slot, the SR630 V2 with 2.5-inch front drive bays supports a custom adapter that is mounted in the server and cabled to one of the onboard NVMe ports. The HBA 440-16i Internal Adapter and RAID 940-16i Internal Adapter are installed in a mount between the front 2.5-inch drive bays and the system fans. The custom Internal Adapters are not supported with 3.5-inch front drives due to a lack of physical space.

The following table lists the adapters used for the internal storage of the server.

Table 37. Storage controller support for internal drives

Part number	Feature code	Description	Power module (supercap)	Maximum supported	Slots supported
Onboard SATA - 8 drives - Intel VROC SATA RAID (Intel RSTe)					
None	AVV0	On Board SATA Software RAID Mode	No	1	Not applicable
Onboard NVMe - 16 drives - Intel VROC NVMe RAID - seeIntel VROC section					
None	B9X7	Intel VROC (VMD NVMe RAID) Intel SSD Only (Standard)	No	1	Not applicable
4L47A39164	B96G	Intel VROC (VMD NVMe RAID) Premium (license upgrade - to enable RAID support for non-Intel NVMe SSDs)	No	1	Not applicable
SAS/SATA RAID adapters - PCIe 3.0 adapters - 8-port					
4Y37A72482	BJHK	ThinkSystem RAID 5350-8i PCIe 12Gb Adapter	No	1	1
4Y37A84028	BRQV	ThinkSystem RAID 5350-8i PCIe 12Gb Internal Adapter	No	1*	None (cabled)
7Y37A01082	AUNG	ThinkSystem RAID 530-8i PCIe 12Gb Adapter	No	1	1
4Y37A72483	BJHL	ThinkSystem RAID 9350-8i 2GB Flash PCIe 12Gb Adapter	Included	1	1
7Y37A01084	AUNJ	ThinkSystem RAID 930-8i 2GB Flash PCIe 12Gb Adapter	Included	1	1
4Y37A72484	BJHM	ThinkSystem RAID 9350-8i 2GB Flash PCIe 12Gb Internal Adapter	Included	1*	None (cabled)
SAS/SATA RAID adapters - PCIe 3.0 adapters - 16-port					
4Y37A09727	BFY5	ThinkSystem RAID 530-16i PCIe 12Gb Adapter	No	1	1
7Y37A01085	AUNK	ThinkSystem RAID 930-16i 4GB Flash PCIe 12Gb Adapter	Included	1	1
4Y37A72485	BJHN	ThinkSystem RAID 9350-16i 4GB Flash PCIe 12Gb Adapter	Included	1	1
4Y37A72486	BJHP	ThinkSystem RAID 9350-16i 4GB Flash PCIe 12Gb Internal Adapter	Included	1*	None (cabled)
SAS/SATA RAID adapters - PCIe 4.0 adapters - 8-port					
4Y37A78834	BMFT	ThinkSystem RAID 540-8i PCIe Gen4 12Gb Adapter	No	1	1
4Y37A09728†	B8NY	ThinkSystem RAID 940-8i 4GB Flash PCIe Gen4 12Gb Adapter	Included	1	1
4Y37A09729†	B8NW	ThinkSystem RAID 940-8i 8GB Flash PCIe Gen4 12Gb Adapter	Included	1	1
SAS/SATA RAID adapters - PCIe 4.0 adapters - 16-port					
4Y37A78835	BNAX	ThinkSystem RAID 540-16i PCIe Gen4 12Gb Adapter	No	1	1

Part number	Feature code	Description	Power module (supercap)	Maximum supported	Slots supported
4Y37A09730†	B8NZ	ThinkSystem RAID 940-16i 8GB Flash PCIe Gen4 12Gb Adapter	Included	1	1
4Y37A78600†	BM35	ThinkSystem RAID 940-16i 4GB Flash PCIe Gen4 12Gb Adapter	Included	1	1
4Y37A09735	B8P0	ThinkSystem RAID 940-16i 8GB Flash PCIe Gen4 12Gb Internal Adapter	Included	1*	None (cabled)
SAS/SATA HBA - PCIe 3.0					
4Y37A72480	BJHH	ThinkSystem 4350-8i SAS/SATA 12Gb HBA	No	1	1
4Y37A72481	BJHJ	ThinkSystem 4350-16i SAS/SATA 12Gb HBA	No	1	1
7Y37A01088	AUNL	ThinkSystem 430-8i SAS/SATA 12Gb HBA	No	1	1
7Y37A01089	AUNM	ThinkSystem 430-16i SAS/SATA 12Gb HBA	No	1	1
SAS/SATA HBA - PCIe 4.0					
4Y37A78601	BM51	ThinkSystem 440-8i SAS/SATA PCIe Gen4 12Gb HBA	No	1	1
4Y37A78602	BM50	ThinkSystem 440-16i SAS/SATA PCIe Gen4 12Gb HBA	No	1	1
4Y37A09725	B8P1	ThinkSystem 440-16i SAS/SATA PCIe Gen4 12Gb Internal HBA	No	1*	None (cabled)
NVMe adapters					
4C57A65446	B98C	ThinkSystem 4-Port PCIe Gen4 NVMe Retimer Adapter	No	1	1
4Y37A09728†	BGM1	ThinkSystem RAID 940-8i 4GB Flash PCIe Gen4 12Gb Adapter for U.3 (Tri-Mode support)	Included	1	1
4Y37A09729†	BGM0	ThinkSystem RAID 940-8i 8GB Flash PCIe Gen4 12Gb Adapter for U.3 (Tri-Mode support)	Included	1	1
4Y37A78600†	BM36	ThinkSystem RAID 940-16i 4GB Flash PCIe Gen4 12Gb Adapter for U.3 (Tri-Mode support)	Included	1	1
4Y37A09730†	BDY4	ThinkSystem RAID 940-16i 8GB Flash PCIe Gen4 12Gb Adapter for U.3 (Tri-Mode support)	Included	1	1

* Only supported with 2.5-inch front drive bays. Not supported in configurations with 3.5-inch front drive bays.
† Adapter also supported PCIe 4.0 x1 connectivity to NVMe drives with U.3 interface

Configuration notes:

- **Supercap support limits the number of RAID adapters installable** : The table lists whether the adapter includes a power module (supercap) to power the flash memory. The server supports between 1 and 3 supercaps depending on the server configuration as described in the RAID flash power module (supercap) support section. The number of supercaps supported also determines the maximum number of RAID adapters with flash that can be installed in the server.
- **Field upgrades**: If you are adding a RAID adapter with supercap to the server as a field upgrade, you may need a supercap holder as described in the RAID flash power module (supercap) support section.
- **7mm drive support**: The storage adapters listed in the table below do *not* provide connectivity to the 7mm drive bays that are optionally available at the rear of the server. The 7mm drives have their own independent RAID controller. See the 7mm drives section for details.
- **E810 Ethernet and X350 RAID/HBAs**: The use of both an Intel E810 network adapter and an X350 HBA/RAID adapter (9350, 5350 and 4350) is supported, however E810 firmware CVL4.3 or later is required. For details, see Support Tip HT513226.

Tri-Mode support - RAID 940 adapters

The RAID 940 adapters support NVMe through a feature named Tri-Mode support (or Trimode support). This feature enables the use of NVMe U.3 drives at the same time as SAS and SATA drives. Tri-Mode requires an AnyBay backplane. Cabling of the controller to the backplanes is the same as with SAS/SATA drives, and the NVMe drives are connected via a PCIe x1 link to the controller.

NVMe drives connected using Tri-Mode support provide better performance than SAS or SATA drives: A SATA SSD has a data rate of 6Gbps, a SAS SSD has a data rate of 12Gbps, whereas an NVMe U.3 Gen 4 SSD with a PCIe x1 link will have a data rate of 16Gbps. NVMe drives typically also have lower latency and higher IOPS compared to SAS and SATA drives. Tri-Mode is supported with U.3 NVMe drives and requires an AnyBay backplane.

Tri-Mode requires U.3 drives: Only NVMe drives with a U.3 interface are supported. U.2 drives are not supported. See the Internal drive options section for the U.3 drives supported by the server.

The onboard SATA controller has the following features:

- Controller integrated into the Intel PCH
- 6 Gbps SATA host interface
- Supports up to 12 SATA drives
- Supports RAID-0, 1, 5, 10 up to 8 drives (Intel VROC SATA RAID, previously known as RSTe)
- Supports JBOD
- Supports HDDs and SSDs; can be mixed

SATA RAID support limited to 8 drives: The SR630 V2 supports 12 SATA drives connected to the onboard SATA controller, however only the first 8 drives can be configured in RAID arrays. The remaining 4 drives can only be configured as JBOD.

The onboard NVMe support has the following features:

- Controller integrated into the Intel processor
- Supports up to 12 NVMe drives direct connected to onboard ports; additional drives through retimer/switch adapters
- Each drive has PCIe 4.0 x4 host interface
- Supports JBOD - Intel and non-Intel NVMe SSDs - no license required
- Supports RAID-0, 1, 5, 10 (Intel VROC NVMe RAID) - Intel NVMe SSDs only unless VROC Premium license is installed
- VROC Premium also extends to any drives connected via an NVMe Adapter (switch or retimer)

Intel VROC onboard RAID

Intel VROC (Virtual RAID on CPU) is a feature of the Intel processor that enables Integrated RAID support.

There are two separate functions of VROC in the SR630 V2:

- Intel VROC SATA RAID, formerly known as Intel RSTe
- Intel VROC NVMe RAID

VROC SATA RAID (RSTe) is available and supported with all SATA drives. It offers a 6 Gb/s connection to each drive and on the SR630 V2 implements RAID levels 0, 1, 5, and 10. RAID 1 is limited to 2 drives per array, and RAID 10 is limited to 4 drives per array. Hot-spare functionality is also supported.

VROC NVMe RAID offers RAID support for any NVMe drives directly connected to the ports on the server's system board or via adapters such as NVMe retimers or NVMe switch adapters. On the SR630 V2, RAID levels implemented are based on the VROC feature selected as indicated in the following table. RAID 1 is limited to 2 drives per array, and RAID 10 is limited to 4 drives per array. Hot-spare functionality is also supported.

Performance tip: For best performance with VROC NVMe RAID, the drives in an array should all be connected to the same processor. Spanning processors is possible however performance will be unpredictable and should be evaluated based on your workload.

The SR630 V2 supports the VROC NVMe RAID offerings listed in the following table. The VROC Intel SSD Only offering only supports RAID on Intel branded NVMe SSDs; non-Intel branded NVMe SSDs cannot be configured in a RAID array.

Tip: These feature codes and part numbers are only for VROC RAID using NVMe drives, not SATA drives

Table 38. Intel VROC NVMe RAID ordering information and feature support

Part number	Feature code	Description	Intel NVMe SSDs	Non-Intel NVMe SSDs	RAID 0	RAID 1	RAID 10	RAID 5
CTO only	B9X7	Intel VROC (VMD NVMe RAID) Intel SSD Only	Yes	No	Yes	Yes	Yes	Yes
4L47A83669	BR9B	Intel VROC (VMD NVMe RAID) Standard	Yes	Yes	Yes	Yes	Yes	No
4L47A39164	B96G	Intel VROC (VMD NVMe RAID) Premium	Yes	Yes	Yes	Yes	Yes	Yes

Configuration notes:

- Intel VROC (VMD NVMe RAID) Intel SSD Only (feature B9X7) is only supported on Intel-branded SSDs; it is not supported with Solidigm or any other brand of SSDs. Consult the specific drive product guides for details.
- If a feature code is ordered in a CTO build, the VROC functionality is enabled in the factory. For field upgrades, order a part number and it will be fulfilled as a Feature on Demand (FoD) license which can then be activated via the XCC management processor user interface.
- Intel VROC NVMe is supported on all Intel Xeon Scalable processors

Virtualization support: Virtualization support for Intel VROC is as follows:

- **VROC SATA RAID (RSTe)**: VROC SATA RAID is supported with Windows, RHEL and SLES, however it is not supported by virtualization hypervisors such as ESXi, KVM, Xen, and Hyper-V. Virtualization is only supported on the onboard SATA ports in AHCI (non-RAID) mode.
- **VROC (VMD) NVMe RAID**: VROC (VMD) NVMe RAID is supported by ESXi, KVM, Xen, and Hyper-V. ESXi support is limited to RAID 1 only; other RAID levels are not supported. Windows and Linux OSes support VROC RAID NVMe, both for host boot functions and for guest OS function, and RAID-0, 1, 5, and 10 are supported. On ESXi, VROC is supported with both boot and data drives.

For specifications about the RAID adapters and HBAs supported by the SR630 V2, see the ThinkSystem RAID Adapter and HBA Comparison, available from: https://lenovopress.com/lp1288-lenovo-thinksystem-raid-adapter-and-hba-reference#sr630-v2-support=SR630%2520V2

For details about these adapters, see the relevant product guide:

- SAS HBAs: https://lenovopress.com/servers/options/hba
- RAID adapters: https://lenovopress.com/servers/options/raid

Internal drive options

The following tables list the drive options for internal storage of the server.

2.5-inch hot-swap drives:

- 2.5-inch hot-swap 12 Gb SAS HDDs
- 2.5-inch hot-swap 24 Gb SAS SSDs
- 2.5-inch hot-swap 6 Gb SATA SSDs
- 2.5-inch hot-swap PCIe 5.0 NVMe SSDs
- 2.5-inch hot-swap PCIe 4.0 NVMe SSDs

2.5-inch 7mm hot-swap drives:

- 7mm 2.5-inch hot-swap 6 Gb SATA SSDs
- 7mm 2.5-inch hot-swap PCIe 4.0 NVMe SSDs

EDSFF hot-swap drives:

- E1.S EDSFF hot-swap PCIe 4.0 NVMe SSDs

3.5-inch hot-swap drives:

- 3.5-inch hot-swap 12 Gb SAS HDDs
- 3.5-inch hot-swap 6 Gb SATA HDDs
- 3.5-inch hot-swap 24 Gb SAS SSDs
- 3.5-inch hot-swap 6 Gb SATA SSDs
- 3.5-inch hot-swap PCIe 4.0 NVMe SSDs

M.2 drives:

- M.2 SATA drives
- M.2 PCIe 4.0 NVMe drives

M.2 drive support: The use of M.2 drives requires an additional adapter as described in the M.2 drives subsection.

SED support: The tables include a column to indicate which drives support SED encryption. The encryption functionality can be disabled if needed. Note: Not all SED-enabled drives have "SED" in the description.

PCIe 5.0 NVMe drive support: When installed in this server, PCIe 5.0 NVMe drives will operate at PCIe 4.0 speeds.

Table 39. 2.5-inch hot-swap 12 Gb SAS HDDs

Part number	Feature code	Description	SED support	Max Qty
2.5-inch hot-swap HDDs - 12 Gb SAS 15K				
7XB7A00021	AULV	ThinkSystem 2.5" 300GB 15K SAS 12Gb Hot Swap 512n HDD	No	12
2.5-inch hot-swap HDDs - 12 Gb SAS 10K				
7XB7A00024	AULY	ThinkSystem 2.5" 300GB 10K SAS 12Gb Hot Swap 512n HDD	No	12
7XB7A00025	AULZ	ThinkSystem 2.5" 600GB 10K SAS 12Gb Hot Swap 512n HDD	No	12
7XB7A00027	AUM1	ThinkSystem 2.5" 1.2TB 10K SAS 12Gb Hot Swap 512n HDD	No	12
7XB7A00028	AUM2	ThinkSystem 2.5" 1.8TB 10K SAS 12Gb Hot Swap 512e HDD	No	12
4XB7A83970	BRG7	ThinkSystem 2.5" 2.4TB 10K SAS 12Gb Hot Swap 512e HDD v2	No	12
2.5-inch hot-swap HDDs - 12 Gb NL SAS				
7XB7A00034	AUM6	ThinkSystem 2.5" 1TB 7.2K SAS 12Gb Hot Swap 512n HDD	No	12
2.5-inch hot-swap SED HDDs - 12 Gb SAS 10K				
7XB7A00031	AUM5	ThinkSystem 2.5" 600GB 10K SAS 12Gb Hot Swap 512n HDD SED	Support	12
7XB7A00033	B0YX	ThinkSystem 2.5" 1.2TB 10K SAS 12Gb Hot Swap 512n HDD SED	Support	12
4XB7A84038	BRG8	ThinkSystem 2.5" 2.4TB 10K SAS 12Gb Hot Swap 512e HDD FIPS v2	Support	12

Table 41. 2.5-inch hot-swap 24 Gb SAS SSDs

Part number	Feature code	Description	SED support	Max Qty
2.5-inch hot-swap SSDs - 24 Gb SAS - Mixed Use/Mainstream (3-5 DWPD)				
4XB7A97308	C4KR	ThinkSystem 2.5" PM7 1.6TB Mixed Use SAS 24Gb HS SSD FIPS	Support	12
4XB7A80340	BNW8	ThinkSystem 2.5" PM1655 800GB Mixed Use SAS 24Gb HS SSD	Support	12
4XB7A80341	BNW9	ThinkSystem 2.5" PM1655 1.6TB Mixed Use SAS 24Gb HS SSD	Support	12
4XB7A80342	BNW6	ThinkSystem 2.5" PM1655 3.2TB Mixed Use SAS 24Gb HS SSD	Support	12
4XB7A80343	BP3K	ThinkSystem 2.5" PM1655 6.4TB Mixed Use SAS 24Gb HS SSD	Support	12
2.5-inch hot-swap SSDs - 24 Gb SAS - Read Intensive/Entry/Capacity (<3 DWPD)				
4XB7A80318	BNWC	ThinkSystem 2.5" PM1653 960GB Read Intensive SAS 24Gb HS SSD	Support	12
4XB7A80319	BNWE	ThinkSystem 2.5" PM1653 1.92TB Read Intensive SAS 24Gb HS SSD	Support	12
4XB7A80320	BNWF	ThinkSystem 2.5" PM1653 3.84TB Read Intensive SAS 24Gb HS SSD	Support	12
4XB7A80321	BP3E	ThinkSystem 2.5" PM1653 7.68TB Read Intensive SAS 24Gb HS SSD	Support	12
4XB7A80322	BP3J	ThinkSystem 2.5" PM1653 15.36TB Read Intensive SAS 24Gb HS SSD	Support	12
4XB7A80323	BP3D	ThinkSystem 2.5" PM1653 30.72TB Read Intensive SAS 24Gb HS SSD	Support	12

Table 43. 2.5-inch hot-swap 6 Gb SATA SSDs

Part number	Feature code	Description	SED support	Max Qty
2.5-inch hot-swap SSDs - 6 Gb SATA - Mixed Use/Mainstream (3-5 DWPD)				
4XB7A90884	BYM2	ThinkSystem 2.5" VA 480GB Mixed Use SATA 6Gb HS SSD v2	No	12
4XB7A90885	BYM4	ThinkSystem 2.5" VA 960GB Mixed Use SATA 6Gb HS SSD v2	No	12
4XB7A90886	BYM5	ThinkSystem 2.5" VA 1.92TB Mixed Use SATA 6Gb HS SSD v2	No	12
4XB7A90887	BYM6	ThinkSystem 2.5" VA 3.84TB Mixed Use SATA 6Gb HS SSD v2	No	12
2.5-inch hot-swap SSDs - 6 Gb SATA - Read Intensive/Entry (<3 DWPD)				
4XB7A90872	BYLQ	ThinkSystem 2.5" VA 240GB Read Intensive SATA 6Gb HS SSD v2	No	12
4XB7A90873	BYLR	ThinkSystem 2.5" VA 480GB Read Intensive SATA 6Gb HS SSD v2	No	12
4XB7A90874	BYLS	ThinkSystem 2.5" VA 960GB Read Intensive SATA 6Gb HS SSD v2	No	12
4XB7A90875	BYLT	ThinkSystem 2.5" VA 1.92TB Read Intensive SATA 6Gb HS SSD v2	No	12
4XB7A90876	BYLU	ThinkSystem 2.5" VA 3.84TB Read Intensive SATA 6Gb HS SSD v2	No	12
4XB7A90877	BYLV	ThinkSystem 2.5" VA 7.68TB Read Intensive SATA 6Gb HS SSD v2	No	12

Table 44. 2.5-inch hot-swap PCIe 5.0 NVMe SSDs

Part number	Feature code	Description	SED support	Max Qty
2.5-inch SSDs - U.2 PCIe 5.0 NVMe - Mixed Use/Mainstream (3-5 DWPD)				
4XB7A93097	C1WM	ThinkSystem 2.5" U.2 PM9D5a 800GB Mixed Use NVMe NVMe PCIe 5.0 x4 HS SSD	Support	12
4XB7A93098	C1WN	ThinkSystem 2.5" U.2 PM9D5a 1.6TB Mixed Use NVMe NVMe PCIe 5.0 x4 HS SSD	Support	12
4XB7A93099	C1WP	ThinkSystem 2.5" U.2 PM9D5a 3.2TB Mixed Use NVMe NVMe PCIe 5.0 x4 HS SSD	Support	12
4XB7A93100	C1WR	ThinkSystem 2.5" U.2 PM9D5a 6.4TB Mixed Use NVMe NVMe PCIe 5.0 x4 HS SSD	Support	12
4XB7A93101	C1WQ	ThinkSystem 2.5" U.2 PM9D5a 12.8TB Mixed Use NVMe NVMe PCIe 5.0 x4 HS SSD	Support	12
4XB7A93888	C0ZM	ThinkSystem 2.5" U.2 CD8P 1.6TB Mixed Use NVMe PCIe 5.0 x4 HS SSD	Support	12
4XB7A93889	C0ZL	ThinkSystem 2.5" U.2 CD8P 3.2TB Mixed Use NVMe PCIe 5.0 x4 HS SSD	Support	12
4XB7A93890	C0ZK	ThinkSystem 2.5" U.2 CD8P 6.4TB Mixed Use NVMe PCIe 5.0 x4 HS SSD	Support	12
4XB7A93891	C0ZJ	ThinkSystem 2.5" U.2 CD8P 12.8TB Mixed Use NVMe PCIe 5.0 x4 HS SSD	Support	12
2.5-inch SSDs - U.2 PCIe 5.0 NVMe - Read Intensive/Entry (<3 DWPD)				
4XB7A93066	C0GK	ThinkSystem 2.5" U.2 PM9D3a 960GB Read Intensive NVMe PCIe 5.0 x4 HS SSD	Support	12
4XB7A93067	C0GL	ThinkSystem 2.5" U.2 PM9D3a 1.92TB Read Intensive NVMe PCIe 5.0 x4 HS SSD	Support	12
4XB7A93068	C0GN	ThinkSystem 2.5" U.2 PM9D3a 3.84TB Read Intensive NVMe PCIe 5.0 x4 HS SSD	Support	12
4XB7A93069	C0GP	ThinkSystem 2.5" U.2 PM9D3a 7.68TB Read Intensive NVMe PCIe 5.0 x4 HS SSD	Support	12
4XB7A93095	C1WL	ThinkSystem 2.5" U.2 PM9D3a 15.36TB Read Intensive NVMe PCIe 5.0 x4 HS SSD	Support	12
4XB7B04552	CA3Q	ThinkSystem 2.5" PM9D3a 30.72TB Read Intensive NVMe PCIe 5.0 x4 HS SSD	Support	12
4XB7A93480	C0BB	ThinkSystem 2.5" U.2 CD8P 1.92TB Read Intensive NVMe PCIe 5.0 x4 HS SSD	Support	12
4XB7A93481	C0BA	ThinkSystem 2.5" U.2 CD8P 3.84TB Read Intensive NVMe PCIe 5.0 x4 HS SSD	Support	12
4XB7A93482	C0B9	ThinkSystem 2.5" U.2 CD8P 7.68TB Read Intensive NVMe PCIe 5.0 x4 HS SSD	Support	12
4XB7A93483	C0B8	ThinkSystem 2.5" U.2 CD8P 15.36TB Read Intensive NVMe PCIe 5.0 x4 HS SSD	Support	12
4XB7A93484	C0B7	ThinkSystem 2.5" U.2 CD8P 30.72TB Read Intensive NVMe PCIe 5.0 x4 HS SSD	Support	12

Table 45. 2.5-inch hot-swap PCIe 4.0 NVMe SSDs

Part number	Feature code	Description	SED support	Max Qty
2.5-inch SSDs - U.2 PCIe 4.0 NVMe - Mixed Use/Mainstream (3-5 DWPD)				
4XB7B01879	C6M2	ThinkSystem 2.5" U.2 Solidigm P5620 1.6TB Mixed Use NVMe PCIe 4.0 x4 HS SSD	Support	12
4XB7B01880	C6M3	ThinkSystem 2.5" U.2 Solidigm P5620 3.2TB Mixed Use NVMe PCIe 4.0 x4 HS SSD	Support	12
4XB7B01881	C6M4	ThinkSystem 2.5" U.2 Solidigm P5620 6.4TB Mixed Use NVMe PCIe 4.0 x4 HS SSD	Support	12
4XB7A93896	C18J	ThinkSystem 2.5" U.2 VA 1.6TB Mixed Use NVMe PCIe 4.0 x4 HS SSD	Support	12
4XB7A93897	C18H	ThinkSystem 2.5" U.2 VA 3.2TB Mixed Use NVMe PCIe 4.0 x4 HS SSD	Support	12
4XB7A93898	C18G	ThinkSystem 2.5" U.2 VA 6.4TB Mixed Use NVMe PCIe 4.0 x4 HS SSD	Support	12
4XB7A93899	C18F	ThinkSystem 2.5" U.2 VA 12.8TB Mixed Use NVMe PCIe 4.0 x4 HS SSD	Support	12
4XB7A17136	BA4V	ThinkSystem 2.5" U.2 P5620 12.8TB Mixed Use NVMe PCIe 4.0 x4 HS SSD	Support	12
2.5-inch SSDs - U.3 PCIe 4.0 NVMe - Mixed Use/Mainstream (3-5 DWPD)				
4XB7A95054	C2BG	ThinkSystem 2.5" U.3 7500 MAX 800GB Mixed Use NVMe PCIe 4.0 x4 HS SSD	Support	12
4XB7A95055	C2BV	ThinkSystem 2.5" U.3 7500 MAX 1.6TB Mixed Use NVMe PCIe 4.0 x4 HS SSD	Support	12
4XB7A95056	C2BW	ThinkSystem 2.5" U.3 7500 MAX 3.2TB Mixed Use NVMe PCIe 4.0 x4 HS SSD	Support	12
4XB7A95057	C2BF	ThinkSystem 2.5" U.3 7500 MAX 6.4TB Mixed Use NVMe PCIe 4.0 x4 HS SSD	Support	12
4XB7A95058	C2BX	ThinkSystem 2.5" U.3 7500 MAX 12.8TB Mixed Use NVMe PCIe 4.0 x4 HS SSD	Support	12
4XB7A17112	B96Z	ThinkSystem U.3 Kioxia CM6-V 1.6TB Mainstream NVMe PCIe4.0 x4 Hot Swap SSD	No	12
2.5-inch SSDs - U.2 PCIe 4.0 NVMe - Read Intensive/Entry (<3 DWPD)				
4XB7B01867	C6MA	ThinkSystem 2.5" U.2 Solidigm P5520 1.92TB Read Intensive NVMe PCIe 4.0 x4 HS SSD	Support	12
4XB7B01868	C6MB	ThinkSystem 2.5" U.2 Solidigm P5520 3.84TB Read Intensive NVMe PCIe 4.0 x4 HS SSD	Support	12
4XB7B01869	C6MC	ThinkSystem 2.5" U.2 Solidigm P5520 7.68TB Read Intensive NVMe PCIe 4.0 x4 HS SSD	Support	12
4XB7A93892	C18N	ThinkSystem 2.5" U.2 VA 1.92TB Read Intensive NVMe PCIe 4.0 x4 HS SSD	Support	12
4XB7A93893	C18M	ThinkSystem 2.5" U.2 VA 3.84TB Read Intensive NVMe PCIe 4.0 x4 HS SSD	Support	12
4XB7A93894	C18L	ThinkSystem 2.5" U.2 VA 7.68TB Read Intensive NVMe PCIe 4.0 x4 HS SSD	Support	12
4XB7A93895	C18K	ThinkSystem 2.5" U.2 VA 15.36TB Read Intensive NVMe PCIe 4.0 x4 HS SSD	Support	12
4XB7A90099	BXMB	ThinkSystem 2.5" U.2 PM9A3 960GB Read Intensive NVMe PCIe 4.0 x4 HS SSD	Support	12

Part number	Feature code	Description	SED support	Max Qty
4XB7A90100	BXMA	ThinkSystem 2.5" U.2 PM9A3 1.92TB Read Intensive NVMe PCIe 4.0 x4 HS SSD	Support	12
4XB7A90101	BXM9	ThinkSystem 2.5" U.2 PM9A3 3.84TB Read Intensive NVMe PCIe 4.0 x4 HS SSD	Support	12
4XB7A79697	BNM6	ThinkSystem 2.5" U.2 PM9A3 3.84TB Read Intensive NVMe PCIe 4.0 x4 HS SSD	Support	12
4XB7A13631	BNEQ	ThinkSystem 2.5" U.2 P5520 15.36TB Read Intensive NVMe PCIe 4.0 x4 HS SSD	Support	12
2.5-inch SSDs - U.3 PCIe 4.0 NVMe - Read Intensive/Entry (<3 DWPD)				
4XB7A95049	C2BY	ThinkSystem 2.5" U.3 7500 PRO 960GB Read Intensive NVMe PCIe 4.0 x4 HS SSD	Support	12
4XB7A95050	C2BR	ThinkSystem 2.5" U.3 7500 PRO 1.92TB Read Intensive NVMe PCIe 4.0 x4 HS SSD	Support	12
4XB7A95051	C2BS	ThinkSystem 2.5" U.3 7500 PRO 3.84TB Read Intensive NVMe PCIe 4.0 x4 HS SSD	Support	12
4XB7A95052	C2BT	ThinkSystem 2.5" U.3 7500 PRO 7.68TB Read Intensive NVMe PCIe 4.0 x4 HS SSD	Support	12
4XB7A95053	C2BU	ThinkSystem 2.5" U.3 7500 PRO 15.36TB Read Intensive NVMe PCIe 4.0 x4 HS SSD	Support	12
4XB7A91176	BZC1	ThinkSystem 2.5" U.3 6500 ION 30.72TB Read Intensive NVMe PCIe 4.0 x4 HS SSD	Support	12
4XB7A81951	BPKX	ThinkSystem 2.5" U.3 PM1733a 1.92TB Read Intensive NVMe PCIe 4.0 x4 HS SSD	Support	12
4XB7A81952	BPKY	ThinkSystem 2.5" U.3 PM1733a 3.84TB Read Intensive NVMe PCIe 4.0 x4 HS SSD	Support	12
4XB7A81953	BPKZ	ThinkSystem 2.5" U.3 PM1733a 7.68TB Read Intensive NVMe PCIe 4.0 x4 HS SSD	Support	12
4XB7A81954	BPL0	ThinkSystem 2.5" U.3 PM1733a 15.36TB Read Intensive NVMe PCIe 4.0 x4 HS SSD	Support	12
4XB7A81999	BPL1	ThinkSystem 2.5" U.3 PM1733a 30.72TB Read Intensive NVMe PCIe 4.0 x4 HS SSD	Support	12

Table 47. 7mm 2.5-inch hot-swap 6 Gb SATA SSDs

Part number	Feature code	Description	SED support	Max Qty
7mm 2.5-inch hot-swap SSDs - 6 Gb SATA - Read Intensive/Entry (<3 DWPD)				
4XB7A82265	BQ1V	ThinkSystem 7mm 5400 PRO 480GB Read Intensive SATA 6Gb HS SSD	Support	2
4XB7A82266	BQ1W	ThinkSystem 7mm 5400 PRO 960GB Read Intensive SATA 6Gb HS SSD	Support	2
4XB7A82267	BR13	ThinkSystem 7mm 5400 PRO 1.92TB Read Intensive SATA 6Gb HS SSD	Support	2
4XB7A82268	BR12	ThinkSystem 7mm 5400 PRO 3.84TB Read Intensive SATA 6Gb HS SSD	Support	2
4XB7A82269	BR11	ThinkSystem 7mm 5400 PRO 7.68TB Read Intensive SATA 6Gb HS SSD	Support	2
4XB7A17107	BK7A	ThinkSystem 7mm S4520 480GB Read Intensive SATA 6Gb HS SSD	No	2
4XB7A17108	BK7B	ThinkSystem 7mm S4520 960GB Read Intensive SATA 6Gb HS SSD	No	2

Table 48. 7mm 2.5-inch hot-swap PCIe 4.0 NVMe SSDs

Part number	Feature code	Description	SED support	Max Qty
7mm 2.5-inch hot-swap SSDs - PCIe 4.0 NVMe - Read Intensive/Entry (<3 DWPD)				
4XB7A90096	BXMN	ThinkSystem 7mm U.2 PM9A3 960GB Read Intensive NVMe PCIe 4.0 x4 HS SSD	Support	2
4XB7A90097	BXMM	ThinkSystem 7mm U.2 PM9A3 1.92TB Read Intensive NVMe PCIe 4.0 x4 HS SSD	Support	2
4XB7A90098	BXML	ThinkSystem 7mm U.2 PM9A3 3.84TB Read Intensive NVMe PCIe 4.0 x4 HS SSD	Support	2

Table 50. E1.S EDSFF hot-swap PCIe 4.0 NVMe SSDs

Part number	Feature code	Description	SED support	Max Qty
E1.S hot-swap SSDs - PCIe 4.0 NVMe - Read Intensive/Entry (<3 DWPD)				
4XB7A13998	BP3L	ThinkSystem E1.S 5.9mm 7450 PRO 3.84TB Read Intensive NVMe PCIe 4.0 x4 HS SSD	Support	16
4XB7A80499	BPKW	ThinkSystem E1.S 5.9mm 7450 PRO 7.68TB Read Intensive NVMe PCIe 4.0 x4 HS SSD	Support	16

Table 52. 3.5-inch hot-swap 12 Gb SAS HDDs

Part number	Feature code	Description	SED support	Max Qty
3.5-inch hot-swap HDDs - 12 Gb SAS 15K				
7XB7A00038	AUU2	ThinkSystem 3.5" 300GB 15K SAS 12Gb Hot Swap 512n HDD	No	4
3.5-inch hot-swap HDDs - 12 Gb NL SAS				
4XB7B01233	C5WY	ThinkSystem 3.5" 2TB 7.2K SAS 12Gb Hot Swap 512e HDD v2	Support	4
7XB7A00042	AUU5	ThinkSystem 3.5" 2TB 7.2K SAS 12Gb Hot Swap 512n HDD	No	4
4XB7B01235	C5X9	ThinkSystem 3.5" 4TB 7.2K SAS 12Gb Hot Swap 512e HDD v2	Support	4
7XB7A00043	AUU6	ThinkSystem 3.5" 4TB 7.2K SAS 12Gb Hot Swap 512n HDD	No	4
4XB7B01237	C5XB	ThinkSystem 3.5" 6TB 7.2K SAS 12Gb Hot Swap 512e HDD v2	Support	4
7XB7A00044	AUU7	ThinkSystem 3.5" 6TB 7.2K SAS 12Gb Hot Swap 512e HDD	No	4
4XB7B01239	C5XD	ThinkSystem 3.5" 8TB 7.2K SAS 12Gb Hot Swap 512e HDD v2	Support	4
7XB7A00045	B0YR	ThinkSystem 3.5" 8TB 7.2K SAS 12Gb Hot Swap 512e HDD	No	4
4XB7B01241	C5XF	ThinkSystem 3.5" 10TB 7.2K SAS 12Gb Hot Swap 512e HDD v2	Support	4
7XB7A00046	AUUG	ThinkSystem 3.5" 10TB 7.2K SAS 12Gb Hot Swap 512e HDD	No	4
7XB7A00067	B117	ThinkSystem 3.5" 12TB 7.2K SAS 12Gb Hot Swap 512e HDD	No	4
4XB7A93788	C4DA	ThinkSystem 3.5" 12TB 7.2K SAS 12Gb Hot Swap 512e HDD v2	Support	4
4XB7A13906	B496	ThinkSystem 3.5" 14TB 7.2K SAS 12Gb Hot Swap 512e HDD	No	4
4XB7A13911	B7EZ	ThinkSystem 3.5" 16TB 7.2K SAS 12Gb Hot Swap 512e HDD	No	4
4XB7A93786	C4D8	ThinkSystem 3.5" 16TB 7.2K SAS 12Gb Hot Swap 512e HDD v2	Support	4
4XB7A38266	BCFP	ThinkSystem 3.5" 18TB 7.2K SAS 12Gb Hot Swap 512e HDD	No	4
4XB7A80353	BPKU	ThinkSystem 3.5" 20TB 7.2K SAS 12Gb Hot Swap 512e HDD	No	4
4XB7A93784	C4D6	ThinkSystem 3.5" 20TB 7.2K SAS 12Gb Hot Swap 512e HDD v2	Support	4
4XB7A83766	BTR7	ThinkSystem 3.5" 22TB 7.2K SAS 12Gb Hot Swap 512e HDD	Support	4
3.5-inch hot-swap SED HDDs - 12 Gb NL SAS				
7XB7A00066	B0YQ	ThinkSystem 3.5" 8TB 7.2K SAS 12Gb Hot Swap 512e HDD FIPS	Support	4

Table 53. 3.5-inch hot-swap 6 Gb SATA HDDs

Part number	Feature code	Description	SED support	Max Qty
3.5-inch hot-swap HDDs - 6 Gb NL SATA				
4XB7A97045	C5X6	ThinkSystem 3.5" 1TB 7.2K SATA 6Gb Hot Swap 512n HDD v2	Support	4
7XB7A00049	AUUF	ThinkSystem 3.5" 1TB 7.2K SATA 6Gb Hot Swap 512n HDD	No	4
4XB7B01234	C5X8	ThinkSystem 3.5" 2TB 7.2K SATA 6Gb Hot Swap 512e HDD v2	Support	4
7XB7A00050	AUUD	ThinkSystem 3.5" 2TB 7.2K SATA 6Gb Hot Swap 512n HDD	No	4
4XB7B01236	C5XA	ThinkSystem 3.5" 4TB 7.2K SATA 6Gb Hot Swap 512e HDD v2	Support	4
7XB7A00051	AUU8	ThinkSystem 3.5" 4TB 7.2K SATA 6Gb Hot Swap 512n HDD	No	4
4XB7B01238	C5XC	ThinkSystem 3.5" 6TB 7.2K SATA 6Gb Hot Swap 512e HDD v2	Support	4
7XB7A00052	AUUA	ThinkSystem 3.5" 6TB 7.2K SATA 6Gb Hot Swap 512e HDD	No	4
4XB7B01240	C5XE	ThinkSystem 3.5" 8TB 7.2K SATA 6Gb Hot Swap 512e HDD v2	Support	4
7XB7A00053	AUU9	ThinkSystem 3.5" 8TB 7.2K SATA 6Gb Hot Swap 512e HDD	No	4
4XB7B01242	C5X7	ThinkSystem 3.5" 10TB 7.2K SATA 6Gb Hot Swap 512e HDD v2	Support	4
7XB7A00054	AUUB	ThinkSystem 3.5" 10TB 7.2K SATA 6Gb Hot Swap 512e HDD	No	4
7XB7A00068	B118	ThinkSystem 3.5" 12TB 7.2K SATA 6Gb Hot Swap 512e HDD	No	4
4XB7A93787	C4D9	ThinkSystem 3.5" 12TB 7.2K SATA 6Gb Hot Swap 512e HDD v2	Support	4
4XB7A13907	B497	ThinkSystem 3.5" 14TB 7.2K SATA 6Gb Hot Swap 512e HDD	No	4
4XB7A13914	B7F0	ThinkSystem 3.5" 16TB 7.2K SATA 6Gb Hot Swap 512e HDD	No	4
4XB7A93785	C4D7	ThinkSystem 3.5" 16TB 7.2K SATA 6Gb Hot Swap 512e HDD v2	Support	4
4XB7A38130	BCFH	ThinkSystem 3.5" 18TB 7.2K SATA 6Gb Hot Swap 512e HDD	No	4
4XB7A80354	BPKV	ThinkSystem 3.5" 20TB 7.2K SATA 6Gb Hot Swap 512e HDD	No	4
4XB7A93783	C4D5	ThinkSystem 3.5" 20TB 7.2K SATA 6Gb Hot Swap 512e HDD v2	Support	4
4XB7A83765	BTR8	ThinkSystem 3.5" 22TB 7.2K SATA 6Gb Hot Swap 512e HDD	Support	4

Table 54. 3.5-inch hot-swap 24 Gb SAS SSDs

Part number	Feature code	Description	SED support	Max Qty
3.5-inch hot-swap SSDs - 24 Gb SAS - Mixed Use/Mainstream (3-5 DWPD)				
4XB7A80344	BNW7	ThinkSystem 3.5" PM1655 800GB Mixed Use SAS 24Gb HS SSD	Support	4
4XB7A80345	BNWA	ThinkSystem 3.5" PM1655 1.6TB Mixed Use SAS 24Gb HS SSD	Support	4
4XB7A80346	BNWB	ThinkSystem 3.5" PM1655 3.2TB Mixed Use SAS 24Gb HS SSD	Support	4
4XB7A80347	BP3G	ThinkSystem 3.5" PM1655 6.4TB Mixed Use SAS 24Gb HS SSD	Support	4
3.5-inch hot-swap SSDs - 24 Gb SAS - Read Intensive/Entry/Capacity (<3 DWPD)				
4XB7A80324	BNWD	ThinkSystem 3.5" PM1653 960GB Read Intensive SAS 24Gb HS SSD	Support	4
4XB7A80325	BNWG	ThinkSystem 3.5" PM1653 1.92TB Read Intensive SAS 24Gb HS SSD	Support	4
4XB7A80326	BNWH	ThinkSystem 3.5" PM1653 3.84TB Read Intensive SAS 24Gb HS SSD	Support	4
4XB7A80327	BP3F	ThinkSystem 3.5" PM1653 7.68TB Read Intensive SAS 24Gb HS SSD	Support	4
4XB7A80328	BP3H	ThinkSystem 3.5" PM1653 15.36TB Read Intensive SAS 24Gb HS SSD	Support	4

Table 56. 3.5-inch hot-swap 6 Gb SATA SSDs

Part number	Feature code	Description	SED support	Max Qty
3.5-inch hot-swap SSDs - 6 Gb SATA - Mixed Use/Mainstream (3-5 DWPD)				
4XB7A90888	BYM3	ThinkSystem 3.5" VA 480GB Mixed Use SATA 6Gb HS SSD v2	No	4
4XB7A90889	BYM7	ThinkSystem 3.5" VA 960GB Mixed Use SATA 6Gb HS SSD v2	No	4
4XB7A90890	BYM8	ThinkSystem 3.5" VA 1.92TB Mixed Use SATA 6Gb HS SSD v2	No	4
4XB7A90891	BYLX	ThinkSystem 3.5" VA 3.84TB Mixed Use SATA 6Gb HS SSD v2	No	4
3.5-inch hot-swap SSDs - 6 Gb SATA - Read Intensive/Entry (<3 DWPD)				
4XB7A90879	BYLJ	ThinkSystem 3.5" VA 480GB Read Intensive SATA 6Gb HS SSD v2	No	4
4XB7A90880	BYLY	ThinkSystem 3.5" VA 960GB Read Intensive SATA 6Gb HS SSD v2	No	4
4XB7A90881	BYLZ	ThinkSystem 3.5" VA 1.92TB Read Intensive SATA 6Gb HS SSD v2	No	4
4XB7A90882	BYM0	ThinkSystem 3.5" VA 3.84TB Read Intensive SATA 6Gb HS SSD v2	No	4
4XB7A90883	BYM1	ThinkSystem 3.5" VA 7.68TB Read Intensive SATA 6Gb HS SSD v2	No	4

Table 57. 3.5-inch hot-swap PCIe 4.0 NVMe SSDs

Part number	Feature code	Description	SED support	Max Qty
3.5-inch SSDs - U.2 PCIe 4.0 NVMe - Mixed Use/Mainstream (3-5 DWPD)				
4XB7B01883	C6M6	ThinkSystem 3.5" U.2 Solidigm P5620 1.6TB Mixed Use NVMe PCIe 4.0 x4 HS SSD	Support	4
4XB7B01884	C6M7	ThinkSystem 3.5" U.2 Solidigm P5620 3.2TB Mixed Use NVMe PCIe 4.0 x4 HS SSD	Support	4
4XB7B01885	C6M8	ThinkSystem 3.5" U.2 Solidigm P5620 6.4TB Mixed Use NVMe PCIe 4.0 x4 HS SSD	Support	4
4XB7A17148	BNEP	ThinkSystem 3.5" U.2 P5620 12.8TB Mixed Use NVMe PCIe 4.0 x4 HS SSD	Support	4
3.5-inch SSDs - U.3 PCIe 4.0 NVMe - Mixed Use/Mainstream (3-5 DWPD)				
4XB7A17115	B96V	ThinkSystem 3.5" Kioxia CM6-V 1.6TB Mainstream NVMe PCIe4.0 x4 Hot Swap SSD	No	4
3.5-inch SSDs - U.2 PCIe 4.0 NVMe - Read Intensive/Entry (<3 DWPD)				
4XB7B01871	C6MD	ThinkSystem 3.5" U.2 Solidigm P5520 1.92TB Read Intensive NVMe PCIe 4.0 x4 HS SSD	Support	4
4XB7B01872	C6ME	ThinkSystem 3.5" U.2 Solidigm P5520 3.84TB Read Intensive NVMe PCIe 4.0 x4 HS SSD	Support	4
4XB7B01873	C6MF	ThinkSystem 3.5" U.2 Solidigm P5520 7.68TB Read Intensive NVMe PCIe 4.0 x4 HS SSD	Support	4
4XB7A76779	BNF0	ThinkSystem 3.5" U.2 P5520 15.36TB Read Intensive NVMe PCIe 4.0 x4 HS SSD	Support	4

Table 59. M.2 SATA drives

Part number	Feature code	Description	SED support	Max Qty
M.2 SSDs - 6 Gb SATA - Read Intensive/Entry (<3 DWPD)				
4XB7A90049	BYF8	ThinkSystem M.2 ER3 480GB Read Intensive SATA 6Gb NHS SSD	Support	2
4XB7A90230	BYF9	ThinkSystem M.2 ER3 960GB Read Intensive SATA 6Gb NHS SSD	Support	2
4XB7A82286	BQ1Z	ThinkSystem M.2 5400 PRO 240GB Read Intensive SATA 6Gb NHS SSD	Support	2
4XB7A82287	BQ1Y	ThinkSystem M.2 5400 PRO 480GB Read Intensive SATA 6Gb NHS SSD	Support	2
4XB7A82288	BQ20	ThinkSystem M.2 5400 PRO 960GB Read Intensive SATA 6Gb NHS SSD	Support	2
7N47A00129	AUUL	ThinkSystem M.2 32GB SATA 6Gbps Non-Hot Swap SSD	No	2

Table 60. M.2 PCIe 4.0 NVMe drives

Part number	Feature code	Description	SED support	Max Qty
M.2 SSDs - PCIe 4.0 NVMe - Mixed Use/Mainstream (3-5 DWPD)				
4XB7A84603	BS2Q	ThinkSystem M.2 7450 MAX 800GB Mixed Use NVMe PCIe 4.0 x4 NHS SSD	Support	2
M.2 SSDs - PCIe 4.0 NVMe - Read Intensive/Entry (<3 DWPD)				
4XB7A90102	BXMH	ThinkSystem M.2 PM9A3 960GB Read Intensive NVMe PCIe 4.0 x4 NHS SSD	Support	2
4XB7A90103	BXMG	ThinkSystem M.2 PM9A3 1.92TB Read Intensive NVMe PCIe 4.0 x4 NHS SSD	Support	2
4XB7A90104	BXMF	ThinkSystem M.2 PM9A3 3.84TB Read Intensive NVMe PCIe 4.0 x4 NHS SSD	Support	2
4XB7A82636	BS2P	ThinkSystem M.2 7450 PRO 480GB Read Intensive NVMe PCIe 4.0 x4 NHS SSD	Support	2
4XB7A13999	BKSR	ThinkSystem M.2 7450 PRO 960GB Read Intensive NVMe PCIe 4.0 x4 NHS SSD	Support	2
4XB7A14000	BKSS	ThinkSystem M.2 7450 PRO 1.92TB Read Intensive Entry NVMe PCIe 4.0 x4 NHS SSD	Support	2
4XB7A84604	BS2R	ThinkSystem M.2 7450 PRO 3.84TB Read Intensive NVMe PCIe 4.0 x4 NHS SSD	Support	2

USB flash drive

For general portable storage needs, the server also supports the USB flash drive option that is listed in the following table.

Table 62. USB memory key

Part number	Feature	Description
4X77A08621	B8NV	ThinkSystem 32GB USB Flash Drive

Internal backup units

The server does not supports any internal backup units, such as tape drives or RDX drives. External backup units are available as described in the External backup units section.

Optical drives

The server supports the external USB optical drive listed in the following table.

Table 63. External optical drive

Part number	Feature code	Description
7XA7A05926	AVV8	ThinkSystem External USB DVD RW Optical Disk Drive

The drive is based on the Lenovo Slim DVD Burner DB65 drive and supports the following formats: DVD-RAM, DVD-RW, DVD+RW, DVD+R, DVD-R, DVD-ROM, DVD-R DL, CD-RW, CD-R, CD-ROM.

I/O expansion

The SR630 V2 supports a total of up to 3 PCIe 4.0 slots, all with rear access, plus a dedicated OCP 3.0 SFF slot for networking. Slot availability is based on riser selection. The use of slot 3 requires that both processors be installed.

- Slot 1: PCIe 4.0 x16 LP (CPU 1)
- Slot 2: PCIe 4.0 x16 LP or FHHL (CPU 1)
- Slot 3: PCIe 4.0 x16 LP (CPU 2)

Slots 1 and 2 are also available as PCIe 3.0 adapter slots, using a lower-cost PCIe 3.0 riser, if desired.

Tip: For configurations with 2.5-inch front drive bays, an internal RAID adapter or HBA can be installed in a dedicated space and cabled to a PCIe 4.0 x8 connector, thereby freeing up a slot for other purposes.

The following figure shows the locations of the rear-accessible slots for each configuration selection. The OCP slot in located in the lower-left corner.

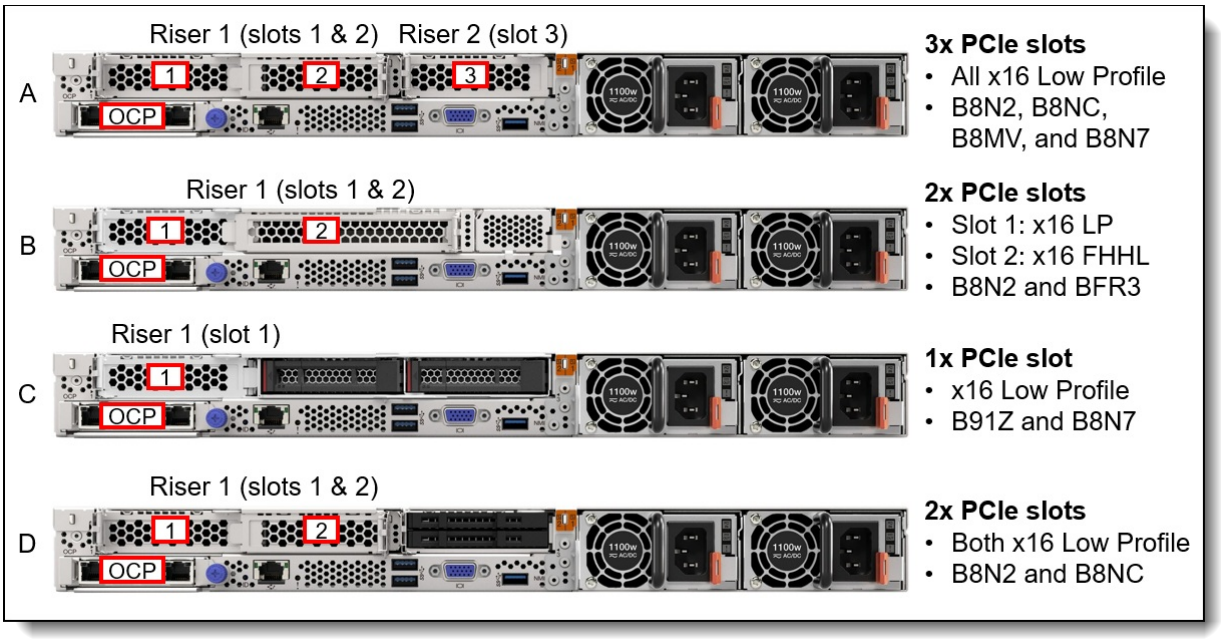

Figure 15. SR630 V2 slot configurations

The slots and riser cards are as follows:

- Riser 1: Slots 1 & 2
  - Slot 1: Low Profile, PCIe 4.0 x16
  - Slot 2: Low Profile or FHHL, PCIe 4.0 x16 (not available in configuration C in the above figure)
- Riser 2: Slot 3 (requires CPU 2)
  - Slot 3: Low Profile, PCIe 4.0 x16 (only available in configuration A)

The riser cards and slot brackets used to provide the above slot combinations in configure-to-order (CTO) configurations are listed in the following table.

Tip: It is also possible to not have any slot selections, in which case slot fillers will be derived in the configurator. Slots can be added later as field upgrades using option part numbers as listed in the Field upgrades table.

Table 64. Riser slot selections - Feature codes for CTO

Feature code	Description	Maximum Supported	Purpose
Riser 1 (slots 1 & 2)			
B8N2	ThinkSystem 1U PCIe Gen4 x16/x16 Riser 1	1	Riser 1 for Configuration A, B, D
B8MW	ThinkSystem 1U PCIe Gen3 x16/x16 Riser 1	1	PCIe 3.0 Riser 1 for Configuration A, B, D
B91Z	ThinkSystem 1U PCIe Gen4 x16 Riser 1 w/ Rear Drive	1	Riser 1 for Configuration C
B8NC	ThinkSystem 1U LP+LP BF Riser Cage Riser 1	1	Bracket for Configuration A, D
BFR3	ThinkSystem 1U LP+FH BF Riser Cage NVFF5.0 Riser 1	1	Bracket for Configuration B
B8N7	ThinkSystem 1U MS LP Riser Cage Riser1&2	1	Bracket for Configuration C (slot 1)
Riser 2 (slot 3)			
B8MV	ThinkSystem 1U PCIe Gen4 x16 Riser 2	1	Riser 2 for Configuration A
B8N7	ThinkSystem 1U MS LP Riser Cage Riser1&2	1	Bracket for Configuration A (slot 3)
Serial port			
BMNJ	ThinkSystem COM Port Upgrade Kit v2	1	Enables the Serial port (installs in slot 3, or slot 2 when configured as a low profile adapter)
AUSL	ThinkSystem COM Port Upgrade Kit	1	Enables the Serial port (installs in slot 3, or slot 2 when configured as a low profile adapter)

Configuration rule:

- With Configuration B (using LP+FH bracket feature BFR3), it is not supported to install a 4-port adapter in slot 1:
  - ThinkSystem Broadcom 57454 10GBASE-T 4-port PCIe Ethernet Adapter, 4XC7A08245
  - ThinkSystem Broadcom 5719 1GbE RJ45 4-Port PCIe Ethernet Adapter, 7ZT7A00484
  - ThinkSystem I350-T4 PCIe 1Gb 4-Port RJ45 Ethernet Adapter, 7ZT7A00535
  - ThinkSystem QLogic QL41134 PCIe 10Gb 4-Port Base-T Ethernet Adapter, 4XC7A08225
  - ThinkSystem Intel X710-T4L 10GBase-T 4-Port PCIe Ethernet Adapter, 4XC7A79699

The ThinkSystem COM Port Upgrade Kit is shown in the following figure.

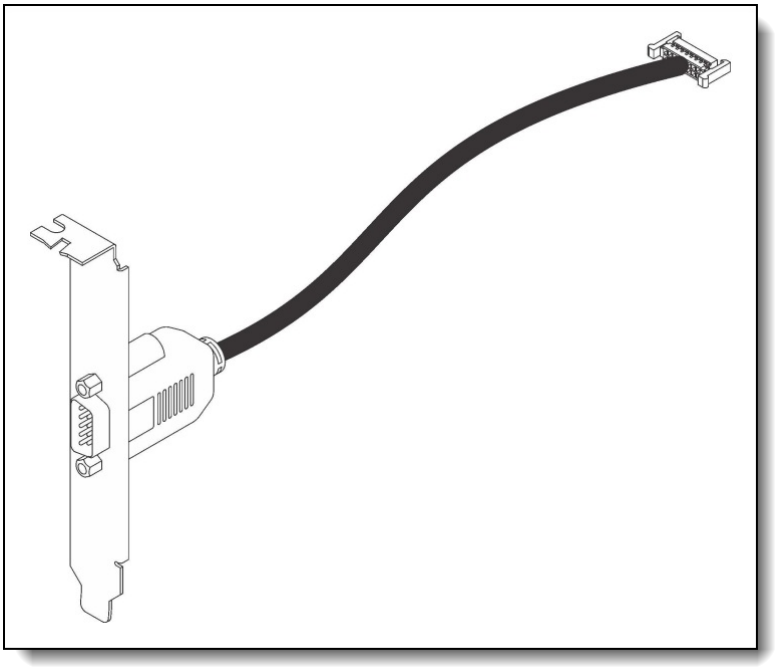

Figure 16. ThinkSystem COM Port Upgrade Kit

Slot field upgrades

Slot configurations can also be ordered as field upgrades using option part numbers, as listed in the following table.

Table 65. Field upgrades for PCIe slots

Part number	Description and contents	Maximum Supported
Riser 1 field upgrades		
4XH7A09866	ThinkSystem SR630 V2/SR645 x16/x16 PCIe G4 Riser1 LP+LP Option Kit Supplies Low Profile slots for slot 1 and slot 2 (configuration A); contains: • PCIe 4.0 x32 riser card, installs in riser slot 1, with two x16 slots • Bracket for slots 1 & 2 ("butterfly" bracket) **Note**: This option just supplies slot 1 and 2. Order 4XH7A09870 for slot 3.	1
4XH7A09867	ThinkSystem SR630 V2/SR645 x16/x16 PCIe G4 Riser1 LP+FH Option Kit Supplies Low Profile slot 1 and FHFL slot 2 (configuration B); contains: • PCIe 4.0 x32 riser card, installs in riser slot 1, with two x16 slots • Bracket for slots 1 & 2 ("butterfly" bracket)	1
4XH7A09895	ThinkSystem SR630 V2/SR645 x16 Riser1 G4 for rear HDD Option Kit Supplies Low Profile slot 1 (configuration C); contains: • PCIe 4.0 x16 riser card, installs in riser slot 1, with one x16 slot • Bracket for slot 1 **Note**: Rear drive bay option kit will need to be ordered separately. SeeDrive bay field upgrades section	1
Riser 2 field upgrades		

Part number	Description and contents	Maximum Supported
4XH7A09870	ThinkSystem SR630 V2/SR645 x16 Riser2 G4 Option Kit Supplies Low Profile slot 3 (configuration A); contains: • PCIe 4.0 x16 riser card, installs in riser slot 2, with one x16 slot • Bracket for slot 3	1
Riser 1 PCIe 3.0 field upgrades		
4XH7A09868	ThinkSystem SR630 V2/SR645 x16/x16 PCIe G3 Riser1 LP+LP Option Kit Supplies PCIe 3.0 Low Profile slots for slot 1 and slot 2 (configuration A); contains: • PCIe 3.0 x32 riser card, installs in riser slot 1, with two x16 slots • Bracket for slots 1 & 2 ("butterfly" bracket) **Note**: This option just supplies slot 1 and 2. Order 4XH7A09870 for slot 3.	1
4XH7A09869	ThinkSystem SR630 V2/SR645 x16/x16 PCIe G3 Riser1 LP+FH Option Kit Supplies PCIe 3.0 Low Profile slot 1 and FHFL slot 2 (configuration B); contains: • PCIe 3.0 x32 riser card, installs in riser slot 1, with two x16 slots • Bracket for slots 1 & 2 ("butterfly" bracket)	1
Serial port field upgrades		
4Z17A80446	ThinkSystem COM Port Upgrade Kit v2 Enables the Serial port (kit is installed in a low profile slot, either slot 2 or slot 3)	
7Z17A02577	ThinkSystem COM Port Upgrade Kit Enables the Serial port (kit is installed in a low profile slot, either slot 2 or slot 3)	1

OCP slot filler

If customers or partners remove an OCP adapter from the server, we recommend that a slot cover (slot filler) be installed in its place to ensure proper airflow in the server. Ordering information is listed in the following table.

Tip: For CTO orders and preconfigured models, slot fillers are automatically installed in slots where an OCP adapter is not installed.

Table 66. OCP slot filler

Part number	Description
4XF7B06188	ThinkSystem OCP3 FILLER

Network adapters

The server has a dedicated OCP 3.0 SFF slot with PCIe 4.0 x16 host interface. See Figure 3 for the location of the OCP slot.

The following table lists the supported OCP adapters. One port can optionally be shared with the XCC management processor for Wake-on-LAN and NC-SI support. Only 1 OCP card can be installed in the server.

Table 67. Supported OCP adapters

Part number	Feature code	Description	Maximum supported
Gigabit			
4XC7A08235	B5T1	ThinkSystem Broadcom 5719 1GbE RJ45 4-port OCP Ethernet Adapter	1
4XC7A88428	BW97	ThinkSystem Intel I350 1GbE RJ45 4-Port OCP Ethernet Adapter V2	1
4XC7A08277	B93E	ThinkSystem Intel I350 1GbE RJ45 4-port OCP Ethernet Adapter	1
Combo Gigabit + 10 GbE			
4XC7A08239	B5SS	ThinkSystem Broadcom 57416 10GBASE-T 2-port + 5720 1GbE 2-port OCP Ethernet Adapter	1
10 GbE			
4XC7A08236	B5ST	ThinkSystem Broadcom 57416 10GBASE-T 2-port OCP Ethernet Adapter	1
4XC7A08278	BCD5	ThinkSystem Intel X710-T2L 10GBASE-T 2-port OCP Ethernet Adapter	1
4XC7A80268	BPPY	ThinkSystem Intel X710-T4L 10GBase-T 4-Port OCP Ethernet Adapter	1
25 GbE			
4XC7A08237	B5SZ	ThinkSystem Broadcom 57414 10/25GbE SFP28 2-Port OCP Ethernet Adapter	1
4XC7A08242	B5SV	ThinkSystem Broadcom 57454 10/25GbE SFP28 4-port OCP Ethernet Adapter	1
4XC7A80567	BPPW	ThinkSystem Broadcom 57504 10/25GbE SFP28 4-Port OCP Ethernet Adapter	1
4XC7A08294	BCD4	ThinkSystem Intel E810-DA2 10/25GbE SFP28 2-Port OCP Ethernet Adapter	1
4XC7A80269	BP8L	ThinkSystem Intel E810-DA4 10/25GbE SFP28 4-Port OCP Ethernet Adapter	1
4XC7A62582	BE4T	ThinkSystem Mellanox ConnectX-6 Lx 10/25GbE SFP28 2-port OCP Ethernet Adapter	1

* Performance fans required. See the Cooling section

The following table lists additional supported network adapters that can be installed in the regular PCIe slots.

Table 68. Supported PCIe Network Adapters

Part number	Feature code	Description	Maximum supported	Slots supported
Gigabit Ethernet				
7ZT7A00484	AUZV	ThinkSystem Broadcom 5719 1GbE RJ45 4-Port PCIe Ethernet Adapter	3	1,2,3
7ZT7A00482	AUZX	ThinkSystem Broadcom 5720 1GbE RJ45 2-Port PCIe Ethernet Adapter	3	1,2,3
7ZT7A00535	AUZW	ThinkSystem I350-T4 PCIe 1Gb 4-Port RJ45 Ethernet Adapter	3	1,2,3
10GBASE-T Ethernet				
7ZT7A00496	AUKP	ThinkSystem Broadcom 57416 10GBASE-T 2-Port PCIe Ethernet Adapter	3	1,2,3
4XC7A80266	BNWL	ThinkSystem Intel X710-T2L 10GBase-T 2-Port PCIe Ethernet Adapter	3	1,2,3
4XC7A79699	BMXB	ThinkSystem Intel X710-T4L 10GBase-T 4-Port PCIe Ethernet Adapter	3	1,2,3
10 Gb Ethernet SFP+				
7ZT7A00537	AUKX	ThinkSystem Intel X710-DA2 PCIe 10Gb 2-Port SFP+ Ethernet Adapter	3	1,2,3
25 Gb Ethernet				

Part number	Feature code	Description	Maximum supported	Slots supported
4XC7A84827	BUQK	ThinkSystem AMD X3522 10/25GbE DSFP28 2-Port PCIe Ethernet Adapter (Low Latency)	3	1,2,3
4XC7A08238	B5T0	ThinkSystem Broadcom 57414 10/25GbE SFP28 2-port PCIe Ethernet Adapter	3	1,2,3
4XC7A08316	BD49	ThinkSystem Broadcom 57454 10/25GbE SFP28 4-port PCIe Ethernet Adapter V2	1	2†
4XC7A80566	BNWM	ThinkSystem Broadcom 57504 10/25GbE SFP28 4-port PCIe Ethernet Adapter	1	2†
4XC7A08295	BCD6	ThinkSystem Intel E810-DA2 10/25GbE SFP28 2-Port PCIe Ethernet Adapter	3	1,2,3
4XC7A80267	BP8M	ThinkSystem Intel E810-DA4 10/25GbE SFP28 4-Port PCIe Ethernet Adapter	1	2†
4XC7A62580	BE4U	ThinkSystem Mellanox ConnectX-6 Lx 10/25GbE SFP28 2-port PCIe Ethernet Adapter	3	1,2,3
4XC7A62581	BHE2	ThinkSystem Solarflare X2522-Plus 10/25GbE SFP28 2-Port PCIe Ethernet Adapter	3	1,2,3
100 Gb Ethernet / InfiniBand HDR100				
4XC7A08297	B96F	ThinkSystem Broadcom 57508 100GbE QSFP56 2-Port PCIe 4 Ethernet Adapter	3*	1,2,3
4XC7A08248	B8PP	ThinkSystem Mellanox ConnectX-6 Dx 100GbE QSFP56 2-port PCIe Ethernet Adapter	3*	1,2,3
4XC7A76757	BLC2	ThinkSystem Xilinx Alveo U50 Data Center Accelerator Adapter	3	1,2,3
4C57A14177	B4R9,BN36	ThinkSystem Mellanox ConnectX-6 HDR100/100GbE QSFP56 1-port PCIe VPI Adapter	3*	1,2,3
200 Gb Ethernet / InfiniBand HDR/NDR200				
4XC7A83773	BQX9	ThinkSystem NVIDIA ConnectX-6 DX 200GbE QSFP56 1-Port PCIe Ethernet Adapter	3*	1,2,3
4C57A15326	B4RC,BN38	ThinkSystem Mellanox ConnectX-6 HDR/200GbE QSFP56 1-port PCIe 4 VPI Adapter	3*	1,2,3
4C57A14179	B4RB	ThinkSystem Mellanox HDR/200GbE 2x PCIe Aux Kit	1	3
4XC7A81883	BQBN	ThinkSystem NVIDIA ConnectX-7 NDR200/200GbE QSFP112 2-port PCIe Gen5 x16 Adapter	3*	1,2,3
400 Gb / NDR InfiniBand				
4XC7A80289	BQ1N	ThinkSystem NVIDIA ConnectX-7 NDR OSFP400 1-Port PCIe Gen5 x16 InfiniBand Adapter	3*	1,2,3

* Performance fans required. See the Cooling section
† In the SR630 V2, this adapter requires a full-height bracket and must be installed in a full-height slot (feature BFR3 or option 4XH7A09867). The use of a low-profile bracket and slot is not supported.

For more information, including the transceivers and cables that each adapter supports, see the list of Lenovo Press Product Guides in the Networking adapters category:
https://lenovopress.com/servers/options/ethernet

Configuration requirements:

- **Use of the Mellanox HDR PCIe Aux Kit** : The HDR Aux Kit (4C57A14179) enables a Socket Direct connection which allows the HDR adapter (4C57A15326) to have direct access to each of the two processors. Such a configuration ensures extremely low latency and CPU utilization in addition to

higher network throughput. Socket Direct also maximizes AI and ML application performance, as it enables native GPU-Direct Technologies.

- **E810 Ethernet and X350 RAID/HBAs**: The use of both an Intel E810 network adapter and an X350 HBA/RAID adapter (9350, 5350 and 4350) is supported, however E810 firmware CVL4.3 or later is required. For details, see Support Tip HT513226.

Fibre Channel host bus adapters

The following table lists the Fibre Channel HBAs supported by the SR630 V2.

Not supported: The following adapters are not supported due to problems with firmware updates:

- ThinkSystem Emulex LPe35000 32Gb 1-port PCIe Fibre Channel Adapter, 4XC7A08250
- ThinkSystem Emulex LPe35002 32Gb 2-port PCIe Fibre Channel Adapter, 4XC7A08251

Table 69. Fibre Channel HBAs

Part number	Feature code	Description	Maximum supported	Slots supported
64 Gb Fibre Channel HBAs				
4XC7A77485	BLC1	ThinkSystem Emulex LPe36002 64Gb 2-port PCIe Fibre Channel Adapter	3	1, 2, 3
32 Gb Fibre Channel HBAs				
4XC7A76498	BJ3G	ThinkSystem Emulex LPe35000 32Gb 1-port PCIe Fibre Channel Adapter v2	3	1 2, 3
4XC7A76525	BJ3H	ThinkSystem Emulex LPe35002 32Gb 2-port PCIe Fibre Channel Adapter v2	3	1 2, 3
4XC7A08279	BA1G	ThinkSystem QLogic QLE2770 32Gb 1-Port PCIe Fibre Channel Adapter	3	1, 2, 3
4XC7A08276	BA1F	ThinkSystem QLogic QLE2772 32Gb 2-Port PCIe Fibre Channel Adapter	3	1, 2, 3
16 Gb Fibre Channel HBAs				
01CV840	ATZV	Emulex 16Gb Gen6 FC Dual-port HBA	3	1, 2, 3
01CV830	ATZU	Emulex 16Gb Gen6 FC Single-port HBA	3	1, 2, 3
01CV760	ATZC	QLogic 16Gb Enhanced Gen5 FC Dual-port HBA	3	1, 2, 3
01CV750	ATZB	QLogic 16Gb Enhanced Gen5 FC Single-port HBA	3	1, 2, 3

For more information, see the list of Lenovo Press Product Guides in the Host bus adapters category: https://lenovopress.com/servers/options/hba

SAS adapters for external storage

The following table lists SAS HBAs and RAID adapters supported by SR630 V2 server for use with external storage.

Table 70. Adapters for external storage

Part number	Feature code	Description	Maximum supported	Slots supported
SAS HBAs				
4Y37A78837	BNWK	ThinkSystem 440-8e SAS/SATA PCIe Gen4 12Gb HBA	3	1, 2, 3
4Y37A09724	B8P7	ThinkSystem 440-16e SAS/SATA PCIe Gen4 12Gb HBA	3	1, 2, 3
External RAID adapters				
4Y37A78836	BNWJ	ThinkSystem RAID 940-8e 4GB Flash PCIe Gen4 12Gb Adapter	3*	1, 2, 3

* See configuration rules below regarding supercap requirements

For a comparison of the functions of the supported external storage adapters, see the ThinkSystem RAID Adapter and HBA Reference:
https://lenovopress.com/lp1288#sr630-v2-support=SR630%20V2&internal-or-external-ports=External

Configuration rules

The RAID 930-8e and 940-8e use a flash power module (supercap), which can be installed in one of the locations as shown in the following figure.

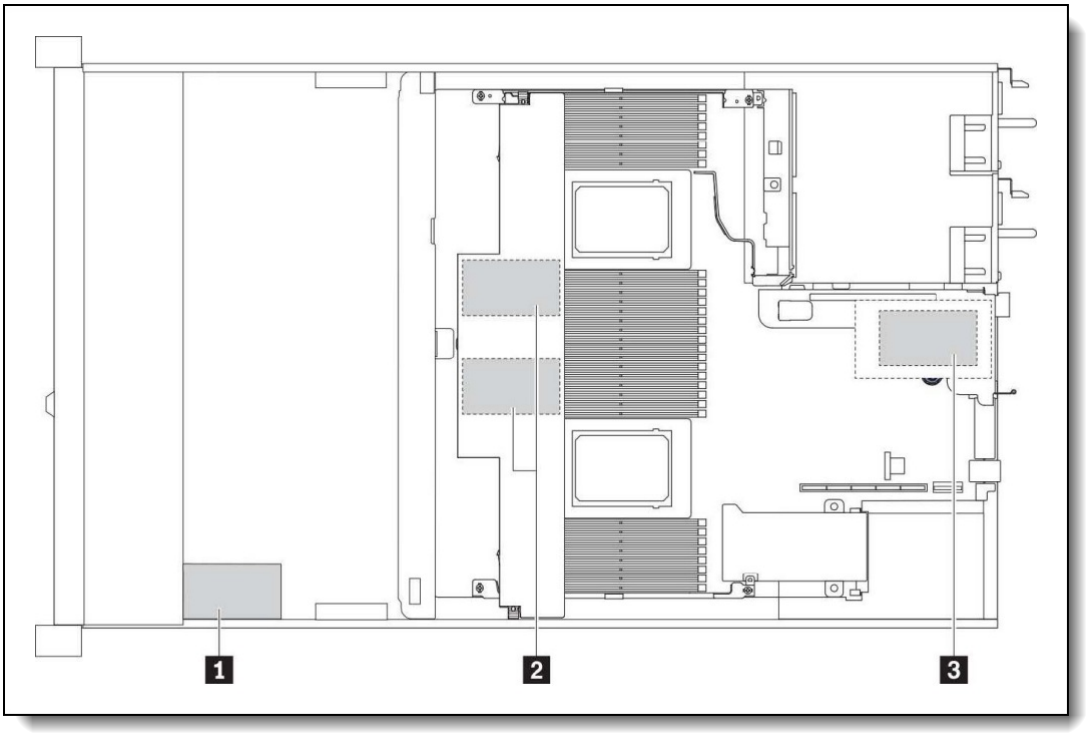

Figure 17. Potential locations of all supercaps in the SR630 V2 (2.5-inch drive configuration and standard heatsinks)

The number of 930/940-8e RAID adapters supported is based on how many supercaps can be installed in the server. The number and location of the supercaps is determined based on the front drive configuration used and which processor heatsinks are installed, as listed in the following table.

Note: If an internal 930/940/9350 RAID adapter with flash power modules is installed, the maximum number of 930/940-8e adapters supported is reduced by 1.

Table 71. RAID adapters and supercap locations

Front drive configuration	Processor heatsinks	Number of adapters & supercaps	Location of supercaps
2.5-inch	Standard	3	Front of server behind operator panel (1 supercap) Mounted on Air baffle (2 supercaps)
	High Performance	1	Front of server behind operator panel
3.5-inch	Standard	2	Mounted on Air baffle (2 supercaps)
	High Performance	1	Installed in slot 3 attached to Riser 2 (this prevents slot 3 being used for an adapter)

For more information, see the list of Lenovo Press Product Guides in the Host bus adapters and RAID adapters categories:
https://lenovopress.com/servers/options/hba
https://lenovopress.com/servers/options/raid

Flash storage adapters

The supported flash storage adapters are all withdrawn from marketing.

GPU adapters

The SR630 V2 supports the following graphics processing units (GPUs).

Table 72. Supported GPUs

Part number	Feature code	Description	Controlled GPU	Maximum supported	Slots supported
4X67A84824	BS2C	ThinkSystem NVIDIA L4 24GB PCIe Gen4 Passive GPU	Controlled	3	1, 2, 3
4X67A81547	BQZT	ThinkSystem NVIDIA A2 16GB PCIe Gen4 Passive GPU w/o CEC	No	3	1, 2, 3

* See configuration rules below

For information about these GPUs, see the ThinkSystem GPU Summary, available at: https://lenovopress.com/lp0768-thinksystem-thinkagile-gpu-summary

Configuration rules:

- The table includes a Controlled GPU column. If a GPU is listed as Controlled, that means the GPU is not offered in certain markets, as determined by the US Government. If a GPU is listed as No, that means the GPU is not controlled and is available in all markets.
- GPUs can be configured in CTO orders as follows:
  - A Controlled GPU can only be configured using one of the Base CTO models designated with "for AI", such as 7Z71CTOAWW, as listed in the Models section.
  - A GPU that is not controlled can only be configured using one of the Base CTO models that is *not* named "for AI", such as 7Z71CTO1WW, as listed in the Models section.
- All GPUs installed must be identical
- Processors with TDP greater than 220W TDP (see Thermal restrictions by processor section):
  - Only 4x 2.5-inch SAS/SATA front drive configuration supported
- For NVIDIA A2, T4 or any other passively cooled GPU (GPU without integrated fan), performance fans are required (see the Cooling section)
- Some NVIDIA A Series GPUs are available as two feature codes, one with a CEC chip and one without a CEC chip (ones without the CEC chip have "w/o CEC" in the name). The CEC is a secondary Hardware Root of Trust (RoT) module that provides an additional layer of security, which can be used by customers who have high regulatory requirements or high security standards. NVIDIA uses a multi-layered security model and hence the protection offered by the primary Root of Trust embedded in the GPU is expected to be sufficient for most customers. The CEC defeatured products still offer Secure Boot, Secure Firmware Update, Firmware Rollback Protection, and In-Band Firmware Update Disable. Specifically, without the CEC chip, the GPU does not support Key Revocation or Firmware Attestation. CEC and non-CEC GPUs of the same type of GPU can be mixed in field upgrades.

Cooling

The SR630 V2 server has up to eight 40 mm dual-rotor hot-swap variable-speed fans, and the fans are N+1 rotor redundant. The fans are dual-rotor counter-rotating units, which means that the fans have two separate propellors, one in front of the other, and that the propellors rotate in opposite directions. Six fans are needed when one processor is installed and eight fans are required when two processors are installed. The server also has one additional fan integrated in each of the two power supplies.

Depending on the configuration, the server will need either all Standard fans (21K RPM) or all Performance fans (28K RPM).

Performance fans are required if the server has any of these components:

- Processors with TDP > 165 W
- Front 10x 2.5-inch AnyBay drive backplane
- Front 16x EDSFF drive backplane
- Rear 2x 2.5-inch backplane
- NVIDIA A2, NVIIDIA T4 or any other passive GPU (GPU without its own internal fan)
- Any of the following OCP adapters installed:
  - ThinkSystem Broadcom 57454 10GBASE-T 4-port OCP Ethernet Adapter
- Any of the following PCIe adapters installed:
  - ThinkSystem Broadcom 57508 100GbE QSFP56 2-port PCIe 4 Ethernet Adapter
  - Mellanox ConnectX-6 Dx 100GbE QSFP56 2-port PCIe Ethernet Adapter
  - Mellanox ConnectX-6 HDR100 IB/100GbE VPI 1-port x16 PCIe 3.0 HCA
  - Mellanox ConnectX-6 HDR100 IB/100GbE VPI 2-port x16 PCIe 3.0 HCA
  - Mellanox ConnectX-6 HDR IB/200GbE Single Port x16 PCIe Adapter

Ordering information for the fans is listed in the following table.

Table 73. Fan ordering information

Part number	Feature code	Description	Number required
4F17A14488	BH9N	ThinkSystem 1U Standard Fan Option Kit (1 fan)	1x CPU: 6 2x CPUs: 8
4F17A14487	BH9M	ThinkSystem 1U Performance Fan Option Kit (1 fan)	1x CPU: 6 2x CPUs: 8

Fans spin when server is powered off : If there is an OCP 3.0 Ethernet adapter installed, when the system is powered off but still plugged in to AC power, fans 1 and 2 may continue to spin at a much lower speed. This is the system design to provide proper cooling for the OCP 3.0 Ethernet adapter.

Power supplies

The SR630 V2 supports up to two redundant hot-swap power supplies.

The power supply choices are listed in the following table. Both power supplies used in server must be identical. The only exception to this is the two 500W Platinum power supplies, 4P57A82021 and 4P57A26290, which can be mixed if needed.

Tip: When configuring a server in the DCSC configurator, power consumption is calculated precisely by interfacing with Lenovo Capacity Planner. You can therefore select the appropriate power supply for your configuration. However, do consider future upgrades that may require additional power needs.

Table 74. Power supply options

Part number	Feature code	Description	Max qty	110V AC	220V AC	240V DC China only	-48V DC
AC input power - Platinum							
4P57A82021	BRD7	ThinkSystem 500W 230V/115V Platinum Hot-Swap Gen2 Power Supply v3	2	Yes	Yes	Yes	No
4P57A75971	BHTT	ThinkSystem 500W 230V/115V Platinum Hot-Swap Gen2 Power Supply v2	2	Yes	Yes	Yes	No
4P57A75972	BHTU	ThinkSystem 750W 230V/115V Platinum Hot-Swap Gen2 Power Supply v2	2	Yes	Yes	Yes	No
4P57A72670	BNFG	ThinkSystem 750W 230V/115V Platinum Hot-Swap Gen2 Power Supply v3	2	Yes	Yes	Yes	No
4P57A75974	BQ0W	ThinkSystem 1100W 230V/115V Platinum Hot-Swap Gen2 Power Supply v2	2	Yes	Yes	Yes	No
4P57A26294	B8QB	ThinkSystem 1800W 230V Platinum Hot-Swap Gen2 Power Supply	2	No	Yes	Yes	No
4P57A78362	BMUF	ThinkSystem 1800W 230V Platinum Hot-Swap Gen2 Power Supply	2	No	Yes	Yes	No
AC input power - Titanium							
4P57A75973	BHS8	ThinkSystem 750W 230V Titanium Hot-Swap Gen2 Power Supply v2	2	No	Yes	Yes	No
4P57A82019	BR1X	ThinkSystem 750W 230V Titanium Hot-Swap Gen2 Power Supply v3	2	No	Yes	Yes	No
4P57A72666	BLKH	ThinkSystem 1100W 230V Titanium Hot-Swap Gen2 Power Supply	2	No	Yes	Yes	No
4P57A78359	BPK9*	ThinkSystem 1800W 230V Titanium Hot-Swap Gen2 Power Supply	2	No	Yes	Yes	No
-48V DC input power							
4P57A26296	B8QE	ThinkSystem 1100W -48V DC Hot-Swap Gen2 Power Supply	2	No	No	No	Yes

* BPK9 is initially only configurable in PRC and certain countries in the EET and WE markets. Worldwide support is planned in 2Q/2023.

Dual-voltage power supplies are auto-sensing and support both 110V AC (100-127V 50/60 Hz) and 220V AC (200-240V 50/60 Hz) power. For China customers, all power supplies support 240V DC.

All supported AC power supplies have a C14 connector. The -48V DC power supply has a Weidmuller TOP 4GS/3 7.6 terminal as shown in the following figure.



Figure 18. ThinkSystem 1100W -48V DC v2 Power Supply

Power supply options do not include a line cord. For server configurations, the inclusion of a power cord is model dependent. Configure-to-order models can be configured without power cords if desired.

Power cords (C13 connectors)

Line cords and rack power cables with C13 connectors can be ordered as listed in the following table.

115V customers: If you plan to use the 1100W power supply with a low-range (100-127V) power source, select a power cable that is rated above 10A. Power cables that are rated at 10A or below are not supported with low-range power.

Table 75. Power cords

Part number	Feature code	Description
Rack cables - C13 to C14		
SL67B08593	BPHZ	0.5m, 10A/100-250V, C13 to C14 Jumper Cord
00Y3043	A4VP	1.0m, 10A/100-250V, C13 to C14 Jumper Cord
4L67A08367	B0N5	1.0m, 13A/100-250V, C13 to C14 Jumper Cord
39Y7937	6201	1.5m, 10A/100-250V, C13 to C14 Jumper Cord
4L67A08368	B0N6	1.5m, 13A/100-250V, C13 to C14 Jumper Cord
4L67A08365	B0N4	2.0m, 10A/100-250V, C13 to C14 Jumper Cord
4L67A08369	6570	2.0m, 13A/100-250V, C13 to C14 Jumper Cord
4L67A08366	6311	2.8m, 10A/100-250V, C13 to C14 Jumper Cord
4L67A08370	6400	2.8m, 13A/100-250V, C13 to C14 Jumper Cord
39Y7932	6263	4.3m, 10A/100-250V, C13 to C14 Jumper Cord
4L67A08371	6583	4.3m, 13A/100-250V, C13 to C14 Rack Power Cable
Rack cables for India - C13 to C14		
4L67B10326	CC6R	2.0m, 10A/100-250V, C13 to C14 Jumper Cord (India)

Part number	Feature code	Description
4L67B10327	CC6S	2.8m, 10A/100-250V, C13 to C14 Jumper Cord (India)
4L67B10328	CC6T	4.3m, 10A/100-250V, C13 to C14 Jumper Cord (India)
Rack cables - C13 to C14 (Y-cable)		
00Y3046	A4VQ	1.345m, 2X C13 to C14 Jumper Cord, Rack Power Cable
00Y3047	A4VR	2.054m, 2X C13 to C14 Jumper Cord, Rack Power Cable
Rack cables - C13 to C20		
39Y7938	6204	2.8m, 10A/100-250V, C13 to IEC 320-C20 Rack Power Cable
Rack cables - C13 to C20 (Y-cable)		
47C2491	A3SW	1.2m, 16A/100-250V, 2 Short C13s to Short C20 Rack Power Cable
47C2492	A3SX	2.5m, 16A/100-250V, 2 Long C13s to Short C20 Rack Power Cable
47C2493	A3SY	2.8m, 16A/100-250V, 2 Short C13s to Long C20 Rack Power Cable
47C2494	A3SZ	4.1m, 16A/100-250V, 2 Long C13s to Long C20 Rack Power Cable
Line cords		
39Y7930	6222	2.8m, 10A/250V, C13 to IRAM 2073 (Argentina) Line Cord
81Y2384	6492	4.3m 10A/220V, C13 to IRAM 2073 (Argentina) Line Cord
39Y7924	6211	2.8m, 10A/250V, C13 to AS/NZ 3112 (Australia/NZ) Line Cord
81Y2383	6574	4.3m, 10A/230V, C13 to AS/NZS 3112 (Aus/NZ) Line Cord
69Y1988	6532	2.8m, 10A/250V, C13 to NBR 14136 (Brazil) Line Cord
81Y2387	6404	4.3m, 10A/250V, C13 - 2P+Gnd (Brazil) Line Cord
39Y7928	6210	2.8m, 10A/220V, C13 to GB 2099.1 (China) Line Cord
81Y2378	6580	4.3m, 10A/220V, C13 to GB 2099.1 (China) Line Cord
39Y7918	6213	2.8m, 10A/250V, C13 to DK2-5a (Denmark) Line Cord
81Y2382	6575	4.3m, 10A/230V, C13 to DK2-5a (Denmark) Line Cord
39Y7917	6212	2.8m, 10A/230V, C13 to CEE7-VII (Europe) Line Cord
81Y2376	6572	4.3m, 10A/230V, C13 to CEE7-VII (Europe) Line Cord
39Y7927	6269	2.8m, 10A/250V, C13(2P+Gnd) (India) Line Cord
81Y2386	6567	4.3m, 10A/240V, C13 to IS 6538 (India) Line Cord
39Y7920	6218	2.8m, 10A/250V, C13 to SI 32 (Israel) Line Cord
81Y2381	6579	4.3m, 10A/230V, C13 to SI 32 (Israel) Line Cord
39Y7921	6217	2.8m, 220-240V, C13 to CEI 23-16 (Italy/Chile) Line Cord
81Y2380	6493	4.3m, 10A/230V, C13 to CEI 23-16 (Italy/Chile) Line Cord
46M2593	A1RE	2.8m, 12A/125V, C13 to JIS C-8303 (Japan) Line Cord
4L67A08362	6495	4.3m, 12A/200V, C13 to JIS C-8303 (Japan) Line Cord
39Y7926	6335	4.3m, 12A/100V, C13 to JIS C-8303 (Japan) Line Cord
39Y7922	6214	2.8m, 10A/250V, C13 to SABS 164 (S Africa) Line Cord
81Y2379	6576	4.3m, 10A/230V, C13 to SABS 164 (South Africa) Line Cord
39Y7925	6219	2.8m, 220-240V, C13 to KETI (S Korea) Line Cord
81Y2385	6494	4.3m, 12A/220V, C13 to KSC 8305 (S. Korea) Line Cord
39Y7919	6216	2.8m, 10A/250V, C13 to SEV 1011-S24507 (Swiss) Line Cord
81Y2390	6578	4.3m, 10A/230V, C13 to SEV 1011-S24507 (Sws) Line Cord
23R7158	6386	2.8m, 10A/125V, C13 to CNS 10917-3 (Taiwan) Line Cord
81Y2375	6317	2.8m, 10A/240V, C13 to CNS 10917-3 (Taiwan) Line Cord

Part number	Feature code	Description
81Y2374	6402	2.8m, 13A/125V, C13 to CNS 60799 (Taiwan) Line Cord
4L67A08363	AX8B	4.3m, 10A 125V, C13 to CNS 10917 (Taiwan) Line Cord
81Y2389	6531	4.3m, 10A/250V, C13 to 76 CNS 10917-3 (Taiwan) Line Cord
81Y2388	6530	4.3m, 13A/125V, C13 to CNS 10917 (Taiwan) Line Cord
39Y7923	6215	2.8m, 10A/250V, C13 to BS 1363/A (UK) Line Cord
81Y2377	6577	4.3m, 10A/230V, C13 to BS 1363/A (UK) Line Cord
90Y3016	6313	2.8m, 10A/120V, C13 to NEMA 5-15P (US) Line Cord
46M2592	A1RF	2.8m, 10A/250V, C13 to NEMA 6-15P Line Cord
00WH545	6401	2.8m, 13A/120V, C13 to NEMA 5-15P (US) Line Cord
4L67A08359	6370	4.3m, 10A/125V, C13 to NEMA 5-15P (US) Line Cord
4L67A08361	6373	4.3m, 10A/250V, C13 to NEMA 6-15P (US) Line Cord
4L67A08360	AX8A	4.3m, 13A/120V, C13 to NEMA 5-15P (US) Line Cord

-48V DC power cord

For the -48V DC Power Supply, the following power cable is supported.

Table 76. -48V DC power cable

Part number	Feature code	Description
4X97A59831	BE4V	2.5m, -48VDC Interconnecting Cable

Systems management

The SR630 V2 contains an integrated service processor, XClarity Controller (XCC), which provides advanced control, monitoring, and alerting functions. The XCC is based on the Pilot4 XE401 baseboard management controller (BMC) using a dual-core ARM Cortex A9 service processor.

Topics in this section:

- Local management
- System status with XClarity Mobile
- Remote management
- Lenovo XClarity Provisioning Manager
- Lenovo XClarity Administrator
- Lenovo XClarity Integrators
- Lenovo XClarity Essentials
- Lenovo XClarity Energy Manager
- Lenovo Capacity Planner

Local management

The SR630 V2 offers a front operator panel with key LED status indicators, as shown in the following figure.

Tip: The Network LED only shows network activity of the installed OCP network adapter.

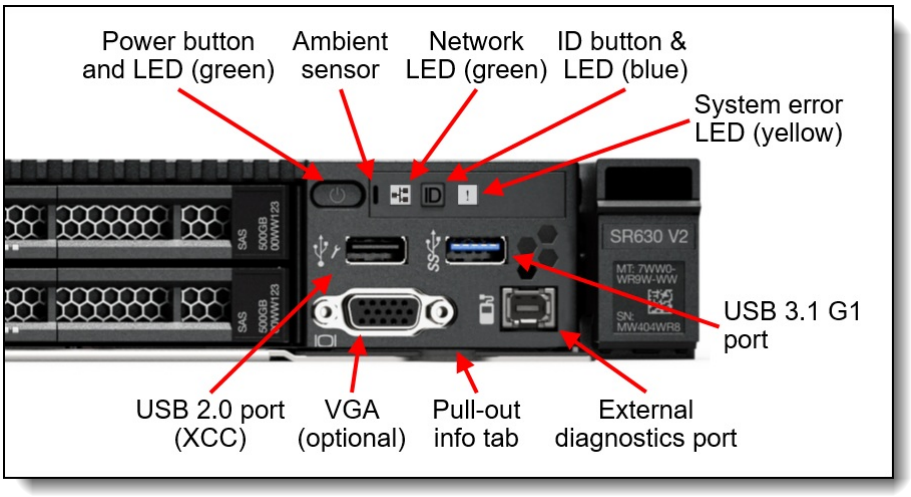

Figure 19. SR630 V2 Front operator panel

Light path diagnostics

The server offers light path diagnostics. If an environmental condition exceeds a threshold or if a system component fails, the XCC lights LEDs inside the server to help you diagnose the problem and find the failing part. The server has fault LEDs next to the following components:

- Each memory DIMM
- Each drive bay
- Each power supply

Integrated Diagnostics Panel for 8x 2.5-inch configurations

For configurations with 8x 2.5-inch drive bays at the front, the server can optionally be configured to have a pull-out Integrated Diagnostics Panel. The following figure shows the 8x 2.5-inch configuration with the standard (fixed) operator panel and the optional Integrated Diagnostics Panel.

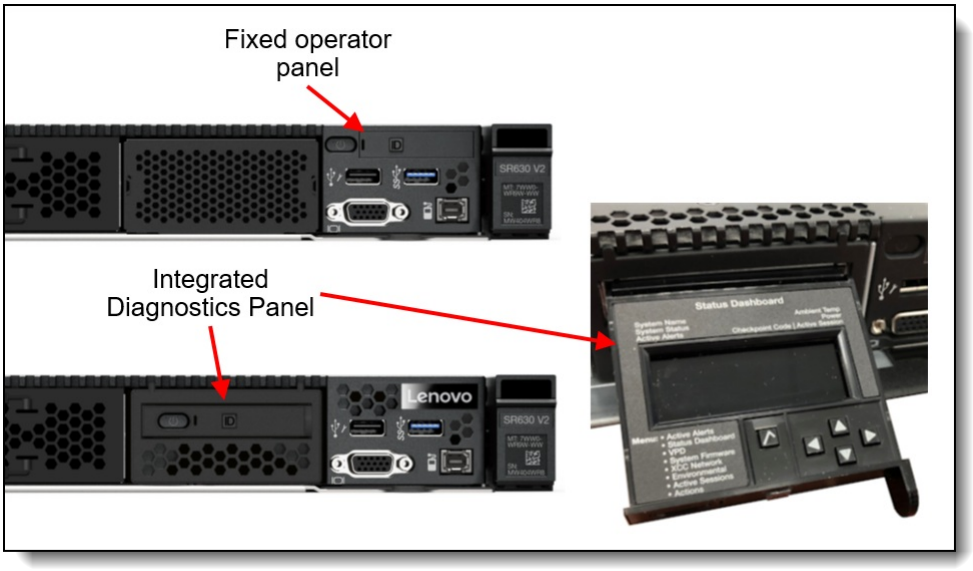

Figure 20. Operator panel choices for the 8x 2.5-inch drive bay configuration

The Integrated Diagnostics Panel allows quick access to system status, firmware, network, and health information. The LCD display on the panel and the function buttons give you access to the following information:

- Active alerts
- Status Dashboard
- System VPD: machine type & mode, serial number, UUID string
- System firmware levels: UEFI and XCC firmware
- XCC network information: hostname, MAC address, IP address, DNS addresses
- Environmental data: Ambient temperature, CPU temperature, AC input voltage, estimated power consumption
- Active XCC sessions
- System reset action

The Integrated Diagnostics Panel can be configured as listed in the following table. It is only available configure-to-order (CTO); not available as a field upgrade.

Table 77. Ordering information for the Integrated Diagnostics Panel

Part number	Feature code	Description
CTO only	B8NH	ThinkSystem 1U Integrated Diagnostics Panel

Configuration rules for the Pull-out operator panel:

- Only supported with configurations with 8x 2.5-inch drive bays
- Not available as a field upgrade. The component is CTO or on pre-configured models only

External Diagnostics Handset

The SR630 V2 also has a port to connect an External Diagnostics Handset as shown in the following figure. The External Diagnostics Handset has the same functions as the Integrated Diagnostics Panel but has the advantages of not consuming space on the front of the server plus it can be shared amongst many servers in your data center. The handset has a magnet on the back of it to allow you to easily mount it on a convenient place on any rack cabinet.

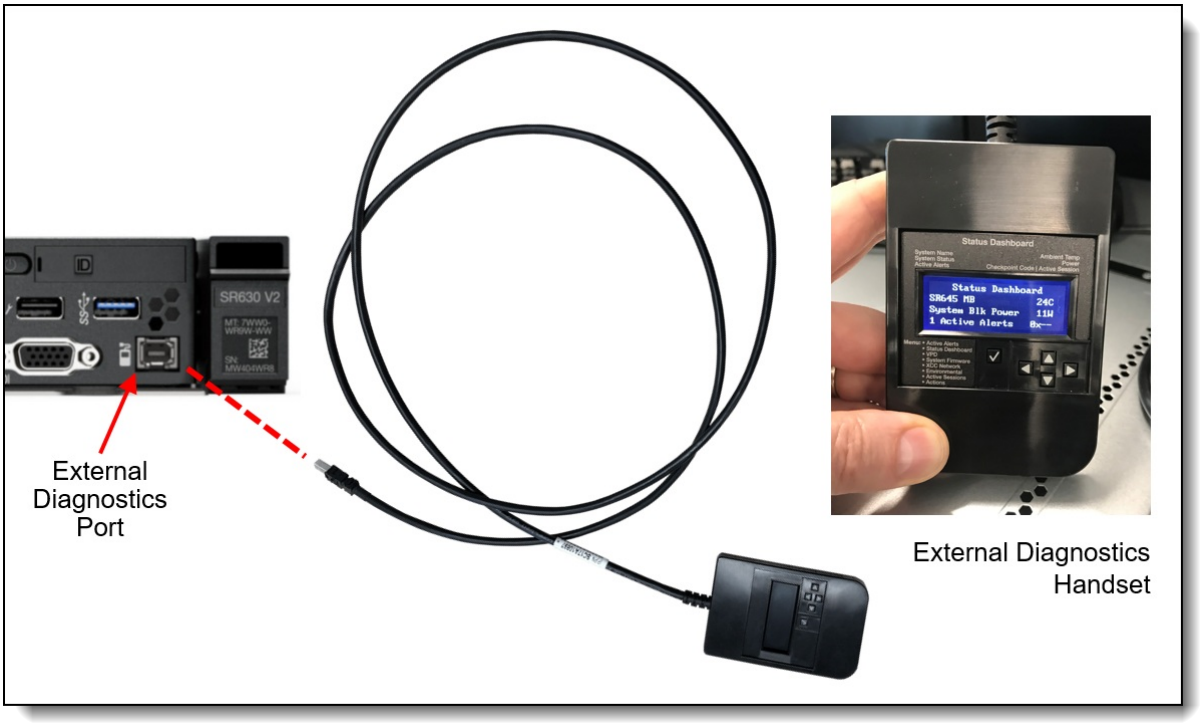

Figure 21. SR630 V2 External Diagnostics Handset

Ordering information for the External Diagnostics Handset with is listed in the following table.

Table 78. External Diagnostics Handset ordering information

Part number	Feature code	Description
4TA7A64874	BEUX	ThinkSystem External Diagnostics Handset

The front of the server also houses an information pull-out tab (also known as the network access tag). See Figure 2 for the location. A label on the tab shows the network information (MAC address and other data) to remotely access the service processor.

System status with XClarity Mobile

The XClarity Mobile app includes a tethering function where you can connect your Android or iOS device to the server via USB to see the status of the server.

The steps to connect the mobile device are as follows:

1. Enable USB Management on the server, by holding down the ID button for 3 seconds (or pressing the dedicated USB management button if one is present)
2. Connect the mobile device via a USB cable to the server's USB port with the management symbol 
3. In iOS or Android settings, enable Personal Hotspot or USB Tethering
4. Launch the Lenovo XClarity Mobile app

Once connected you can see the following information:

- Server status including error logs (read only, no login required)
- Server management functions (XClarity login credentials required)

Remote management

The server offers a dedicated RJ45 port at the rear of the server for remote management via the XClarity Controller management processor. The port supports 10/100/1000 Mbps speeds.

Remote server management is provided through industry-standard interfaces:

- Intelligent Platform Management Interface (IPMI) Version 2.0
- Simple Network Management Protocol (SNMP) Version 3 (no SET commands; no SNMP v1)
- Common Information Model (CIM-XML)
- Representational State Transfer (REST) support
- Redfish support (DMTF compliant)
- Web browser - HTML 5-based browser interface (Java and ActiveX not required) using a responsive design (content optimized for device being used - laptop, tablet, phone) with NLS support

IPMI via the Ethernet port (IPMI over LAN) is supported, however it is disabled by default. For CTO orders you can specify whether you want to the feature enabled or disabled in the factory, using the feature codes listed in the following table.

Table 79. IPMI-over-LAN settings

Feature code	Description
B7XZ	Disable IPMI-over-LAN (default)
B7Y0	Enable IPMI-over-LAN

There are two XClarity Controller upgrades available for the server, Advanced and Enterprise.

XCC Advanced Upgrade adds the following functions:

- Remotely viewing video with graphics resolutions up to 1600x1200 at 75 Hz with up to 23 bits per pixel, regardless of the system state
- Remotely accessing the server using the keyboard and mouse from a remote client
- International keyboard mapping support
- Syslog alerting
- Redirecting serial console via SSH
- Component replacement log (Maintenance History log)
- Access restriction (IP address blocking)
- Lenovo SED security key management
- Displaying graphics for real-time and historical power usage data and temperature

XCC Enterprise Upgrade enables the following additional features:

- Boot video capture and crash video capture
- Virtual console collaboration - Ability for up to 6 remote users to be log into the remote session simultaneously
- Remote console Java client
- Mapping the ISO and image files located on the local client as virtual drives for use by the server
- Mounting the remote ISO and image files via HTTPS, SFTP, CIFS, and NFS
- Power capping
- System utilization data and graphic view
- Single sign on with Lenovo XClarity Administrator
- Update firmware from a repository
- License for XClarity Energy Manager

For configure-to-order (CTO), you can enable the required XCC functionality by selecting the appropriate XCC feature codes listed in the following table:

- XCC Standard - select neither feature listed in the table
- XCC Advanced - select feature AVUT
- XCC Enterprise - select feature AUPW

Table 80. XClarity Controller upgrades for configure-to-order

Feature code	Description
AVUT	ThinkSystem XClarity Controller Standard to Advanced Upgrade
AUPW	ThinkSystem XClarity Controller Standard to Enterprise Upgrade

For systems with XCC Standard or XCC Advanced installed, field upgrades are available as listed in the following table.

Table 81. XClarity Controller field upgrades

Part number	Description
4L47A09132	ThinkSystem XClarity Controller Standard to Advanced Upgrade (for servers that have XCC Standard)
4L47A09133	ThinkSystem XClarity Controller Advanced to Enterprise Upgrade (for servers that have XCC Advanced)

Lenovo XClarity Provisioning Manager

Lenovo XClarity Provisioning Manager (LXPM) is a UEFI-based application embedded in ThinkSystem servers and accessible via the F1 key during system boot.

LXPM provides the following functions:

- Graphical UEFI Setup
- System inventory information and VPD update
- System firmware updates (UEFI and XCC)
- RAID setup wizard
- OS installation wizard (including unattended OS installation)
- Diagnostics functions

Lenovo XClarity Administrator

Lenovo XClarity Administrator is a centralized resource management solution designed to reduce complexity, speed response, and enhance the availability of Lenovo systems and solutions. It provides agent-free hardware management for ThinkSystem servers. The administration dashboard is based on HTML 5 and allows fast location of resources so tasks can be run quickly.

Because Lenovo XClarity Administrator does not require any agent software to be installed on the managed endpoints, there are no CPU cycles spent on agent execution, and no memory is used, which means that up to 1GB of RAM and 1 - 2% CPU usage is saved, compared to a typical managed system where an agent is required.

Lenovo XClarity Administrator is an optional software component for the SR630 V2. The software can be downloaded and used at no charge to discover and monitor the SR630 V2 and to manage firmware upgrades.

If software support is required for Lenovo XClarity Administrator, or premium features such as configuration management and operating system deployment are required, Lenovo XClarity Pro software subscription should be ordered. Lenovo XClarity Pro is licensed on a per managed system basis, that is, each managed Lenovo system requires a license.

The following table lists the Lenovo XClarity software license options.

Table 82. Lenovo XClarity Pro ordering information

Part number	Feature code	Description
00MT201	1339	Lenovo XClarity Pro, per Managed Endpoint w/1 Yr SW S&S
00MT202	1340	Lenovo XClarity Pro, per Managed Endpoint w/3 Yr SW S&S
00MT203	1341	Lenovo XClarity Pro, per Managed Endpoint w/5 Yr SW S&S
7S0X000HWW	SAYV	Lenovo XClarity Pro, per Managed Endpoint w/6 Yr SW S&S
7S0X000JWW	SAYW	Lenovo XClarity Pro, per Managed Endpoint w/7 Yr SW S&S

Lenovo XClarity Administrator offers the following standard features that are available at no charge:

- Auto-discovery and monitoring of Lenovo systems
- Firmware updates and compliance enforcement
- External alerts and notifications via SNMP traps, syslog remote logging, and e-mail
- Secure connections to managed endpoints
- NIST 800-131A or FIPS 140-3 compliant cryptographic standards between the management solution and managed endpoints
- Integration into existing higher-level management systems such as cloud automation and orchestration tools through REST APIs, providing extensive external visibility and control over hardware resources
- An intuitive, easy-to-use GUI
- Scripting with Windows PowerShell, providing command-line visibility and control over hardware resources

Lenovo XClarity Administrator offers the following premium features that require an optional Pro license:

- Pattern-based configuration management that allows to define configurations once and apply repeatedly without errors when deploying new servers or redeploying existing servers without disrupting the fabric
- Bare-metal deployment of operating systems and hypervisors to streamline infrastructure provisioning

For more information, refer to the Lenovo XClarity Administrator Product Guide:
http://lenovopress.com/tips1200

Lenovo XClarity Integrators

Lenovo also offers software plug-in modules, Lenovo XClarity Integrators, to manage physical infrastructure from leading external virtualization management software tools including those from Microsoft and VMware.

These integrators are offered at no charge, however if software support is required, a Lenovo XClarity Pro software subscription license should be ordered.

Lenovo XClarity Integrators offer the following additional features:

- Ability to discover, manage, and monitor Lenovo server hardware from VMware vCenter or Microsoft System Center
- Deployment of firmware updates and configuration patterns to Lenovo x86 rack servers and Flex System from the virtualization management tool
- Non-disruptive server maintenance in clustered environments that reduces workload downtime by dynamically migrating workloads from affected hosts during rolling server updates or reboots
- Greater service level uptime and assurance in clustered environments during unplanned hardware events by dynamically triggering workload migration from impacted hosts when impending hardware failures are predicted

For more information about all the available Lenovo XClarity Integrators, see the Lenovo XClarity Administrator Product Guide: https://lenovopress.com/tips1200-lenovo-xclarity-administrator

Lenovo XClarity Essentials

Lenovo offers the following XClarity Essentials software tools that can help you set up, use, and maintain the server at no additional cost:

- Lenovo Essentials OneCLI

  OneCLI is a collection of server management tools that uses a command line interface program to manage firmware, hardware, and operating systems. It provides functions to collect full system health information (including health status), configure system settings, and update system firmware and drivers.

- Lenovo Essentials UpdateXpress

  The UpdateXpress tool is a standalone GUI application for firmware and device driver updates that enables you to maintain your server firmware and device drivers up-to-date and help you avoid unnecessary server outages. The tool acquires and deploys individual updates and UpdateXpress System Packs (UXSPs) which are integration-tested bundles.

- Lenovo Essentials Bootable Media Creator

  The Bootable Media Creator (BOMC) tool is used to create bootable media for offline firmware update.

For more information and downloads, visit the Lenovo XClarity Essentials web page:
http://support.lenovo.com/us/en/documents/LNVO-center

Lenovo XClarity Energy Manager

Lenovo XClarity Energy Manager (LXEM) is a power and temperature management solution for data centers. It is an agent-free, web-based console that enables you to monitor and manage power consumption and temperature in your data center through the management console. It enables server density and data center capacity to be increased through the use of power capping.

LXEM is a licensed product. A single-node LXEM license is included with the XClarity Controller Enterprise upgrade as described in the Remote Management section. If your server does not have the XCC Enterprise upgrade, Energy Manager licenses can be ordered as shown in the following table.

Table 83. Lenovo XClarity Energy Manager

Part number	Description
4L40E51621	Lenovo XClarity Energy Manager Node License (1 license needed per server)

For more information about XClarity Energy Manager, see the following resources:

- Lenovo Support page:
  https://datacentersupport.lenovo.com/us/en/solutions/lnvo-lxem
- User Guide for XClarity Energy Manager:
  https://pubs.lenovo.com/lxem/

Lenovo Capacity Planner

Lenovo Capacity Planner is a power consumption evaluation tool that enhances data center planning by enabling IT administrators and pre-sales professionals to understand various power characteristics of racks, servers, and other devices. Capacity Planner can dynamically calculate the power consumption, current, British Thermal Unit (BTU), and volt-ampere (VA) rating at the rack level, improving the planning efficiency for large scale deployments.

For more information, refer to the Capacity Planner web page:
http://datacentersupport.lenovo.com/us/en/solutions/lnvo-lcp

Security

Topics in this section:

- Security features
- Platform Firmware Resiliency - Lenovo ThinkShield
- Security standards

Security features

The server offers the following electronic security features:

- Administrator and power-on password
- Trusted Platform Module (TPM) supporting TPM 2.0 (no support for TPM 1.2)
- Optional Nationz TPM 2.0, available only in China (CTO only)
- Self-encrypting drives (SEDs) with support for enterprise key managers - see the SED encryption key management section

The server is NIST SP 800-147B compliant.

The SR630 V2 server also offers the following physical security features:

- Optional chassis intrusion switch
- Optional lockable front security bezel

The optional lockable front security bezel is shown in the following figure and includes a key that enables you to secure the bezel over the drives and system controls thereby reducing the chance of unauthorized or accidental access to the server.

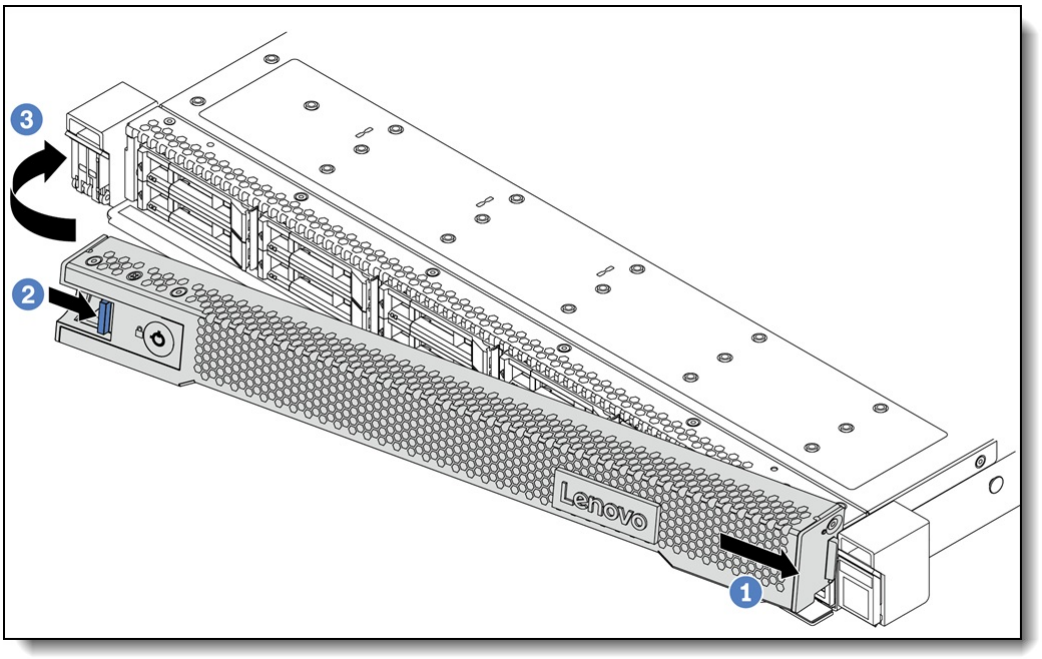

Figure 22. Lockable front security bezel

The dimensions of the security bezel are:

- Width: 437 mm (17.2 in.)
- Height: 43 mm (1.3 in.)
- Width: 23 mm (0.9 in.)

The following table lists the security options for the SR630 V2.

Table 84. Security features

Part number	Feature code	Description
4X97A59835	BA2X	ThinkSystem 1U Intrusion Cable
4XH7A09890	B8NL	ThinkSystem V2 1U Security Bezel
CTO only*	B8LE	ThinkSystem Nationz Trusted Platform Module v2.0 (China customers only)

* Not available as a field upgrade. The component is CTO or on pre-configured models only.

Platform Firmware Resiliency - Lenovo ThinkShield

Lenovo's ThinkShield Security is a transparent and comprehensive approach to security that extends to all dimensions of our data center products: from development, to supply chain, and through the entire product lifecycle.

The ThinkSystem SR630 V2 includes Platform Firmware Resiliency (PFR) hardware Root of Trust (RoT) which enables the system to be NIST SP800-193 compliant. This offering further enhances key platform subsystem protections against unauthorized firmware updates and corruption, to restore firmware to an integral state, and to closely monitor firmware for possible compromise from cyber-attacks.

PFR operates upon the following server components:

- UEFI image – the low-level server firmware that connects the operating system to the server hardware
- XCC image – the management “engine” software that controls and reports on the server status separate from the server operating system
- FPGA image – the code that runs the server’s lowest level hardware controller on the motherboard

The Lenovo Platform Root of Trust Hardware performs the following three main functions:

- Detection – Measures the firmware and updates for authenticity
- Recovery – Recovers a corrupted image to a known-safe image
- Protection – Monitors the system to ensure the known-good firmware is not maliciously written

These enhanced protection capabilities are implemented using a dedicated, discrete security processor whose implementation has been rigorously validated by leading third-party security firms. Security evaluation results and design details are available for customer review – providing unprecedented transparency and assurance.

The SR630 V2 includes support for Secure Boot, a UEFI firmware security feature developed by the UEFI Consortium that ensures only immutable and signed software are loaded during the boot time. The use of Secure Boot helps prevent malicious code from being loaded and helps prevent attacks, such as the installation of rootkits. Lenovo offers the capability to enable secure boot in the factory, to ensure end-to-end protection. Alternatively, Secure Boot can be left disabled in the factory, allowing the customer to enable it themselves at a later point, if desired.

The following table lists the relevant feature code(s).

Table 85. Secure Boot options

Part number	Feature code	Description	Purpose
CTO only	AUK7	TPM 2.0 and Secure Boot	Configure the system in the factory with Secure Boot enabled.
CTO only	B0MK	Enable TPM 2.0	Configure the system without Secure Boot enabled. Customers can enable Secure Boot later if desired.
CTO only	C1GD	ST45 V3 TPM 2.0 for WW	

Tip: If Secure Boot is not enabled in the factory, it can be enabled later by the customer. However once Secure Boot is enabled, it cannot be disabled.

Security standards

The SR630 V2 supports the following security standards and capabilities:

- **Industry Standard Security Capabilities**
  - Intel CPU Enablement
    - AES-NI (Advanced Encryption Standard New Instructions)
    - CBnT (Converged Boot Guard and Trusted Execution Technology)
    - CET (Control flow Enforcement Technology)
    - Hardware-based side channel attack resilience enhancements
    - MKTME/TME (Multi-Key Total Memory Encryption)
    - SGX (Software Guard eXtensions)
    - SGX-TEM (Trusted Environment Mode)
    - TDX (Trust Domain Extensions)
    - TXT (Trusted eXecution Technology)
    - VT (Virtualization Technology)
    - XD (eXecute Disable)
  - Microsoft Windows Security Enablement
    - Credential Guard
    - Device Guard
    - Host Guardian Service
  - TCG (Trusted Computing Group) TPM (Trusted Platform Module) 2.0
  - UEFI (Unified Extensible Firmware Interface) Forum Secure Boot

- **Hardware Root of Trust and Security**
  - Independent security subsystem providing platform-wide NIST SP800-193 compliant Platform Firmware Resilience (PFR)
  - Management domain RoT supplemented by the Secure Boot features of XCC
- **Platform Security**
  - Boot and run-time firmware integrity monitoring with rollback to known-good firmware (e.g., "self-healing")
  - Non-volatile storage bus security monitoring and filtering
  - Resilient firmware implementation, such as to detect and defeat unauthorized flash writes or SMM (System Management Mode) memory incursions
  - Patented IPMI KCS channel privileged access authorization (USPTO Patent# 11,256,810)
  - Host and management domain authorization, including integration with CyberArk for enterprise password management
  - KMIP (Key Management Interoperability Protocol) compliant, including support for IBM SKLM and Thales KeySecure
  - Reduced "out of box" attack surface
  - Configurable network services

  For more information on platform security, see the paper "How to Harden the Security of your ThinkSystem Server and Management Applications" available from https://lenovopress.com/lp1260-how-to-harden-the-security-of-your-thinksystem-server.
- **Standards Compliance and/or Support**
  - NIST SP800-131A rev 2 "Transitioning the Use of Cryptographic Algorithms and Key Lengths"
  - NIST SP800-147B "BIOS Protection Guidelines for Servers"
  - NIST SP800-193 "Platform Firmware Resiliency Guidelines"
  - ISO/IEC 11889 "Trusted Platform Module Library"
  - Common Criteria TCG Protection Profile for "PC Client Specific TPM 2.0"
  - European Union Commission Regulation 2019/424 ("ErP Lot 9") "Ecodesign Requirements for Servers and Data Storage Products" Secure Data Deletion
  - Optional FIPS 140-2 validated Self-Encrypting Disks (SEDs) with external KMIP-based key management
- **Product and Supply Chain Security**
  - Suppliers validated through Lenovo's Trusted Supplier Program
  - Developed in accordance with Lenovo's Secure Development Lifecycle (LSDL)
  - Continuous firmware security validation through automated testing, including static code analysis, dynamic network and web vulnerability testing, software composition analysis, and subsystem-specific testing, such as UEFI security configuration validation
  - Ongoing security reviews by US-based security experts, with attestation letters available from our third-party security partners
  - Digitally signed firmware, stored and built on US-based infrastructure and signed on US-based Hardware Security Modules (HSMs)
  - TAA (Trade Agreements Act) compliant manufacturing, by default in Mexico for North American markets with additional US and EU manufacturing options
  - US 2019 NDAA (National Defense Authorization Act) Section 889 compliant

Rack installation

The following table lists the rack installation options that are available for the SR630 V2.

The VGA Upgrade Kit allows you to upgrade your server by adding a VGA video port to the front of the server (if the server does not already come with a front VGA port). When the front VGA is in use, the rear VGA port is automatically disabled.

Optional front VGA port

Table 86. Rack installation options

Option	Feature Code	Description
4X97A12644	BA2Y	ThinkSystem V2/V3 1U Front VGA Cable Option Kit (adds a VGA port to the front of the server)
Rail slides		
4XF7A99129	C4TL	ThinkSystem Toolless Stab-in Slide Rail Kit V3
4XF7A99130	C4TM	ThinkSystem Toolless Stab-in Slide Rail Kit V3 with 1U CMA
4M17A13564	B42B / BK7W	ThinkSystem SR250/SR150 Toolless Friction Rail
4M17A11754	B8LA	ThinkSystem Toolless Slide Rail Kit v2
4M17A11758	B8LC	ThinkSystem Toolless Slide Rail Kit v2 with 1U CMA
Enhanced Rail slides - drop-in mounting		
4M17A11755	B8LB	ThinkSystem Toolless Slide Rail Kit v2 Enhanced
4XF7A89443	B8LD	ThinkSystem Toolless Slide Rail Kit v2 Enhanced with 1U CMA
Cable Management Arm		
7M27A05699	B136	ThinkSystem 1U CMA Upgrade Kit for Toolless Slide Rail

For the specification of the rail kits, see the ThinkSystem and ThinkEdge Rail Kit Reference: https://lenovopress.lenovo.com/lp1838-thinksystem-and-thinkedge-rail-kit-reference#sr630-v2-support=SR630%2520V2

Operating system support

The server supports the following operating systems:

- Microsoft Windows Server 2016
- Microsoft Windows Server 2019
- Microsoft Windows Server 2022
- Microsoft Windows Server 2025
- Red Hat Enterprise Linux 7.9
- Red Hat Enterprise Linux 8.2
- Red Hat Enterprise Linux 8.3
- Red Hat Enterprise Linux 8.4
- Red Hat Enterprise Linux 8.5
- Red Hat Enterprise Linux 8.6
- Red Hat Enterprise Linux 8.7
- Red Hat Enterprise Linux 8.8
- Red Hat Enterprise Linux 8.9
- Red Hat Enterprise Linux 8.10
- Red Hat Enterprise Linux 9.0
- Red Hat Enterprise Linux 9.1
- Red Hat Enterprise Linux 9.2
- Red Hat Enterprise Linux 9.3
- Red Hat Enterprise Linux 9.4
- Red Hat Enterprise Linux 9.5

- Red Hat Enterprise Linux 9.6
- Red Hat Enterprise Linux 10.0
- SUSE Linux Enterprise Server 12 SP5
- SUSE Linux Enterprise Server 12 Xen SP5
- SUSE Linux Enterprise Server 15 SP2
- SUSE Linux Enterprise Server 15 SP3
- SUSE Linux Enterprise Server 15 SP4
- SUSE Linux Enterprise Server 15 SP5
- SUSE Linux Enterprise Server 15 SP6
- SUSE Linux Enterprise Server 15 Xen SP2
- SUSE Linux Enterprise Server 15 Xen SP3
- SUSE Linux Enterprise Server 15 Xen SP4
- SUSE Linux Enterprise Server 15 Xen SP5
- Ubuntu 18.04 LTS 64-bit
- Ubuntu 20.04 LTS 64-bit
- Ubuntu 22.04 LTS 64-bit
- Ubuntu 24.04 LTS 64-bit
- VMware ESXi 6.7 U3
- VMware ESXi 7.0 U2
- VMware ESXi 7.0 U3
- VMware ESXi 8.0
- VMware ESXi 8.0 U1
- VMware ESXi 8.0 U2
- VMware ESXi 8.0 U3
- VMware ESXi 9.0

For a complete list of supported, certified and tested operating systems, plus additional details and links to relevant web sites, see the Operating System Interoperability Guide:
https://lenovopress.com/osig#servers=sr630-v2-7z70-7z71

For configure-to-order configurations, the SR630 V2 can be preloaded with VMware ESXi. Ordering information is listed in the following table.

Table 87. VMware ESXi preload

Part number	Feature code	Description
CTO only	BMEY	VMware ESXi 7.0 U3 (Factory Installed)
CTO only	BYC7	VMware ESXi 8.0 U2 (Factory Installed)
CTO only	BZ97	VMware ESXi 8.0 U3 (Factory Installed)

Configuration rule:

- An ESXi preload cannot be selected if the configuration includes an NVIDIA GPU (ESXi preload cannot include the NVIDIA driver)

You can download supported VMware vSphere hypervisor images from the following web page and install it using the instructions provided:
https://vmware.lenovo.com/content/custom_iso/

Physical and electrical specifications

The SR630 V2 has the following overall physical dimensions, excluding components that extend outside the standard chassis, such as EIA flanges, front security bezel (if any), and power supply handles:

- Width: 440 mm (17.3 inches)
- Height: 43 mm (1.7 inches)
- Depth: 773 mm (30.4 inches)

The following table lists the detailed dimensions. See the figure below for the definition of each dimension.

Table 88. Detailed dimensions

Dimension	Description
482 mm	X_a = Width, to the outsides of the front EIA flanges
435 mm	X_b = Width, to the rack rail mating surfaces
440 mm	X_c = Width, to the outer most chassis body feature
43 mm	Y_a = Height, from the bottom of chassis to the top of the chassis
724 mm	Z_a = Depth, from the rack flange mating surface to the rearmost I/O port surface
738 mm	Z_b = Depth, from the rack flange mating surface to the rearmost feature of the chassis body
753 mm (≤1100W PSU) 781 mm (1800W PSU)	Z_c = Depth, from the rack flange mating surface to the rearmost feature such as power supply handle
36 mm	Z_d = Depth, from the forwardmost feature on front of EIA flange to the rack flange mating surface
47 mm	Z_e = Depth, from the front of security bezel (if applicable) or forwardmost feature to the rack flange mating surface

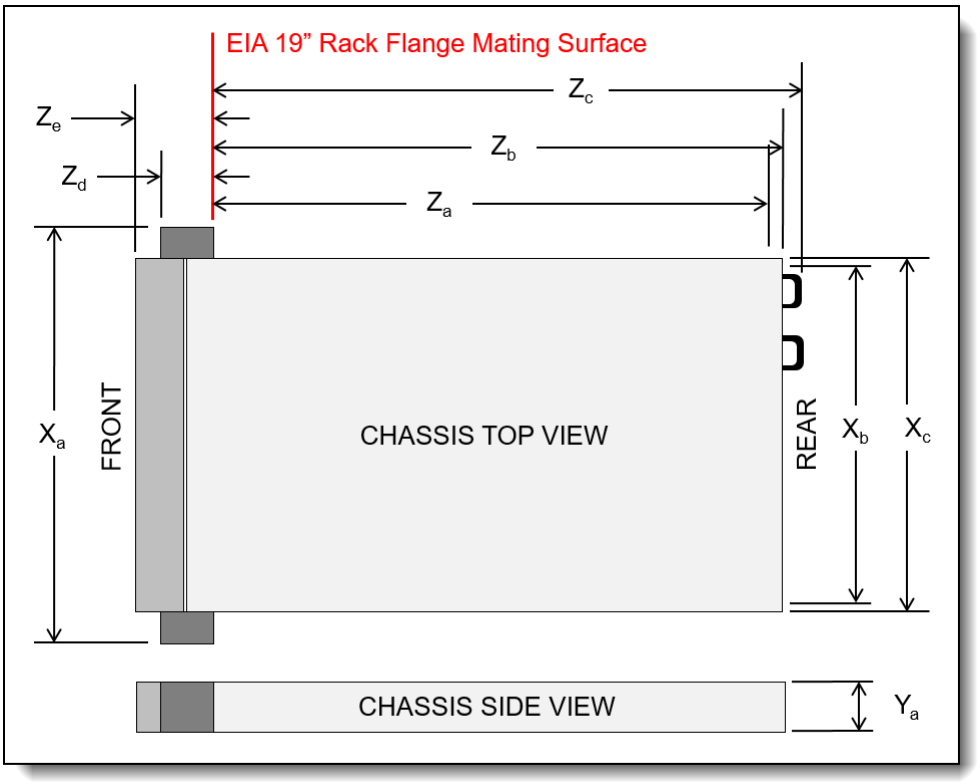

Figure 23. Server dimensions

The shipping (cardboard packaging) dimensions of the SR630 V2 are as follows:

- Width: 587 mm (23.1 inches)
- Height: 225 mm (8.9 inches)
- Depth: 998 mm (39.3 inches)

The server has the following weight:

- Maximum: 20.8 kg (45.9 lb)
- Maximum with packaging, power cords, rail kit, CMA: 28.4 kg (62.6 lb)

The server has the following electrical specifications for AC input power supplies:

- Input voltage:
  - 100 to 127 (nominal) Vac, 50 Hz or 60 Hz
  - 200 to 240 (nominal) Vac, 50 Hz or 60 Hz
  - 180 to 300 Vdc (China only)
- Inlet current:
  - 100-127 V:
    - 500W power supply: 5.7 A
    - 750W Platinum power supply: 8.4 A
    - 750W Titanium power supply: Not supported
    - 1100W power supply: 12 A*
    - 1800W power supply: Not supported
  - 200-240 V:
    - 500W power supply: 2.7 A
    - 750W Platinum power supply: 4.1 A
    - 750W Titanium power supply: 4 A
    - 1100W power supply: 6 A
    - 1800W power supply: 10 A

* In China, this power supply cannot exceed 10 A current.

Electrical specifications for DC input power supply:

- Input voltage: -48 to -60 Vdc
- Inlet current (1100W power supply): 26 A

Operating environment

The SR630 V2 server complies with ASHRAE Class A2 specifications with most configurations, and depending on the hardware configuration, also complies with ASHRAE Class A3 and Class A4 specifications. System performance may be impacted when operating temperature is outside ASHRAE A2 specification.

Topics in this section:

- Ambient temperature requirements
- Temperature and humidity
- Acoustical noise emissions
- Shock and vibration
- Particulate contamination

Ambient temperature requirements

The restrictions to ASHRAE support are as follows:

- The ambient temperature must be no more than 30°C if the server has any of the following components:
  - Processor with 205 W < TDP ≤ 270 W
  - Rear 2.5-inch NVMe drives
  - 256 GB DIMMs
  - Persistent Memory
  - NVIDIA T4 or any other passive GPU (GPU without integrated fan)
- The ambient temperature must be no more than 35°C if the server has any of the following components:
  - Processor with 165 W < TDP ≤ 205 W
  - Front NMVe drives

    - Flash storage adapters
    - Rear 2.5-inch SATA drives
    - Rear 7mm drives
    - M.2 NVMe drives
- The ambient temperature must be no more than 45°C if the server has any of the following components:
    - Processor with TDP ≤ 165 W

Temperature and humidity

The server is supported in the following environment:

- Air temperature:
    - Operating:
        - ASHRAE Class A2: 10°C to 35°C (50°F to 95°F); the maximum ambient temperature decreases by 1°C for every 300 m (984 ft) increase in altitude above 900 m (2,953 ft).
        - ASHRAE Class A3: 5°C to 40°C (41°F to 104°F); the maximum ambient temperature decreases by 1°C for every 175 m (574 ft) increase in altitude above 900 m (2,953 ft).
        - ASHRAE Class A4: 5°C to 45°C (41°F to 113°F); the maximum ambient temperature decreases by 1°C for every 125 m (410 ft) increase in altitude above 900 m (2,953 ft).
    - Server off: 5°C to 45°C (41°F to 113°F)
    - Shipment/storage: -40°C to 60°C (-40°F to 140°F)
- Maximum altitude: 3,050 m (10,000 ft)
- Relative Humidity (non-condensing):
    - Operating
        - ASHRAE Class A2: 8% to 80%; maximum dew point: 21°C (70°F)
        - ASHRAE Class A3: 8% to 85%; maximum dew point: 24°C (75°F)
        - ASHRAE Class A4: 8% to 90%; maximum dew point: 24°C (75°F)
    - Shipment/storage: 8% to 90%

Acoustical noise emissions

The server has the following acoustic noise emissions declaration:

- Sound power level (L_{WAd}):
    - Idling: 6.0 Bel (Typical), 7.6 Bel (GPU rich), 7.5 Bel (Storage rich)
    - Operating: 7.1 Bel (Typical), 8.3 Bel (GPU rich), 7.7 Bel (Storage rich)
- Sound pressure level (L_{pAm}):
    - Idling: 45 dBA (Typical), 62 dBA (GPU rich), 61 dBA (Storage rich)
    - Operating: 56 dBA (Typical), 69 dBA (GPU rich), 62 dBA (Storage rich)

Notes:

- The sound levels were measured in controlled acoustical environments according to procedures specified by ISO7779 and are reported in accordance with ISO 9296.
- The declared acoustic sound levels are based on following configurations, which may change slightly depending on configuration/conditions, for example high-power processors and GPUs, and high-power network adapters such as the Mellanox ConnectX-6 HDR/200GbE QSFP56 PCIe Adapters or the Broadcom 57454 10GBASE-T 4-port OCP Ethernet Adapter.
    - Typical config: 2x 165W processors, 8x 64 GB DIMMs, 8x SAS HDDs, 1x 440-16i HBA, Intel X710-T2L 10GBASE-T 2-port OCP adapter, 2x 750W power supplies
    - GPU-rich config: 2x 205W processors, 16x 64 GB DIMMs, 10x SAS HDDs, 1x RAID 940-16i, Intel X710-T2L 10GBASE-T 2-port OCP adapter, 2x NVIDIA Tesla T4 GPUs, 2x 1100W power supplies
    - Storage-rich config: 2x 165W processors, 16x 64 GB DIMMs, 12x SAS HDDs, 1x RAID 940-16i, Intel X710-T2L 10GBASE-T 2-port OCP adapter, 2x 750W power supplies

- Government regulations (such as those prescribed by OSHA or European Community Directives) may govern noise level exposure in the workplace and may apply to you and your server installation. The actual sound pressure levels in your installation depend upon a variety of factors, including the number of racks in the installation; the size, materials, and configuration of the room; the noise levels from other equipment; the room ambient temperature, and employee's location in relation to the equipment. Further, compliance with such government regulations depends on a variety of additional factors, including the duration of employees' exposure and whether employees wear hearing protection. Lenovo recommends that you consult with qualified experts in this field to determine whether you are in compliance with the applicable regulations.

Shock and vibration

The server has the following vibration and shock limits:

- Vibration:
  - Operating: 0.21 G rms at 5 Hz to 500 Hz for 15 minutes across 3 axes
  - Non-operating: 1.04 G rms at 2 Hz to 200 Hz for 15 minutes across 6 surfaces
- Shock:
  - Operating: 15 G for 3 milliseconds in each direction (positive and negative X, Y, and Z axes)
  - Non-operating:
    - Server weight 12 kg - 22 kg: 50 G for 152 in./sec velocity change across 6 surfaces
    - Server weight 23 kg - 31 kg: 35 G for 152 in./sec velocity change across 6 surfaces

Particulate contamination

Airborne particulates (including metal flakes or particles) and reactive gases acting alone or in combination with other environmental factors such as humidity or temperature might damage the system that might cause the system to malfunction or stop working altogether.

The following specifications indicate the limits of particulates that the system can tolerate:

- Reactive gases:
  - The copper reactivity level shall be less than 200 Angstroms per month (Å/month)
  - The silver reactivity level shall be less than 200 Å/month
- Airborne particulates:
  - The room air should be continuously filtered with MERV 8 filters.
  - Air entering a data center should be filtered with MERV 11 or preferably MERV 13 filters.
  - The deliquescent relative humidity of the particulate contamination should be more than 60% RH
  - Environment must be free of zinc whiskers

For additional information, see the Specifications section of the documentation for the server, available from the Lenovo Documents site, https://pubs.lenovo.com/

Warranty upgrades and post-warranty support

The SR630 V2 has a 1-year or 3-year warranty based on the machine type of the system:

- 7Z70 - 1 year warranty
- 7Z71 - 3 year warranty

Our global network of regional support centers offers consistent, local-language support enabling you to vary response times and level of service to match the criticality of your support needs:

- **Standard Next Business Day** – Best choice for non-essential systems requiring simple maintenance.
- **Premier Next Business Day** – Best choice for essential systems requiring technical expertise from senior-level Lenovo engineers.
- **Premier 24x7 4-Hour Response** – Best choice for systems where maximum uptime is critical.
- **Premier Enhanced Storage Support 24x7 4-Hour Response** – Best choice for storage systems where maximum uptime is critical.

For more information, consult the brochure Lenovo Operational Support Services for Data Centers Services.

Services

Lenovo Data Center Services empower you at every stage of your IT lifecycle. From expert advisory and strategic planning to seamless deployment and ongoing support, we ensure your infrastructure is built for success. Our comprehensive services accelerate time to value, minimize downtime, and free your IT staff to focus on driving innovation and business growth.

Note: Some service options may not be available in all markets or regions. For more information, go to https://lenovolocator.com/. For information about Lenovo service upgrade offerings that are available in your region, contact your local Lenovo sales representative or business partner.

In this section:

- Lenovo Advisory Services
- Lenovo Plan & Design Services
- Lenovo Deployment, Migration, and Configuration Services
- Lenovo Support Services
- Lenovo Managed Services
- Lenovo Sustainability Services

Lenovo Advisory Services

Lenovo Advisory Services simplify the planning process, enabling customers to build future-proofed strategies in as little as six weeks. Consultants provide guidance on projects including VM migration, storage, backup and recovery, and cost management to accelerate time to value, improve cost efficiency, and build a flexibly scalable foundation.

- **Assessment Services**

  An Assessment helps solve your IT challenges through an onsite, multi-day session with a Lenovo technology expert. We perform a tools-based assessment which provides a comprehensive and thorough review of a company's environment and technology systems. In addition to the technology based functional requirements, the consultant also discusses and records the non-functional business requirements, challenges, and constraints. Assessments help organizations like yours, no matter how large or small, get a better return on your IT investment and overcome challenges in the ever-changing technology landscape.

- **Design Services**

  Professional Services consultants perform infrastructure design and implementation planning to support your strategy. The high-level architectures provided by the assessment service are turned into low level designs and wiring diagrams, which are reviewed and approved prior to implementation. The implementation plan will demonstrate an outcome-based proposal to provide business capabilities through infrastructure with a risk-mitigated project plan.

Lenovo Plan & Design Services

Unlock faster time to market with our tailored, strategic design workshops to align solution approaches with your business goals and technical requirements. Leverage our deep solution expertise and end-to-end delivery partnership to meet your goals efficiently and effectively.

Lenovo Deployment, Migration, and Configuration Services

Optimize your IT operations by shifting labor-intensive functions to Lenovo's skilled technicians for seamless on-site or remote deployment, configuration, and migration. Enjoy peace of mind, faster time to value, and comprehensive knowledge sharing with your IT staff, backed by our best-practice methodology.

- **Deployment Services for Storage and ThinkAgile**

  A comprehensive range of remote and onsite options tailored specifically for your business needs to ensure your storage and ThinkAgile hardware are fully operational from the start.

- **Hardware Installation Services**

  A full-range, comprehensive setup for your hardware, including unpacking, inspecting, and positioning components to ensure your equipment is operational and error-free for the most seamless and efficient installation experience, so you can quickly benefit from your investments.

- **DM/DG File Migration Services**

  Take the burden of file migration from your IT’s shoulders. Our experts will align your requirements and business objectives to the migration plans while coordinating with your team to plan and safely execute the data migration to your storage platforms.

- **DM/DG/DE Health Check Services**

  Our experts perform proactive checks of your Firmware and system health to ensure your machines are operating at peak and optimal efficiency to maximize up-time, avoid system failures, ensure the security of IT solutions and simplify maintenance.

- **Factory Integrated Services**

  A suite of value-added offerings provided during the manufacturing phase of a server or storage system that reduces time to value. These services aim at improving your hardware deployment experience and enhance the quality of a standard configuration before it arrives at your facility.

Lenovo Support Services

In addition to response time options for hardware parts, repairs, and labor, Lenovo offers a wide array of additional support services to ensure your business is positioned for success and longevity. Our goal is to reduce your capital outlays, mitigate your IT risks, and accelerate your time to productivity.

- **Premier Support for Data Centers**

  Your direct line to the solution that promises the best, most comprehensive level of support to help you fully unlock the potential of your data center.

- **Premier Enhanced Storage Support (PESS)**

  Gain all the benefits of Premier Support for Data Centers, adding dedicated storage specialists and resources to elevate your storage support experience to the next level.

- **Committed Service Repair (CSR)**

  Our commitment to ensuring the fastest, most seamless resolution times for mission-critical systems that require immediate attention to ensure minimal downtime and risk for your business. This service is only available for machines under the Premier 4-Hour Response SLA.

- **Multivendor Support Services (MVS)**

  Your single point of accountability for resolution support across vast range of leading Server, Storage, and Networking OEMs, allowing you to manage all your supported infrastructure devices seamlessly from a single source.

- **Keep Your Drive (KYD)**

  Protect sensitive data and maintain compliance with corporate retention and disposal policies to ensure your data is always under your control, regardless of the number of drives that are installed in your Lenovo server.

- **Technical Account Manager (TAM)**

  Your single point of contact to expedite service requests, provide status updates, and furnish reports to track incidents over time, ensuring smooth operations and optimized performance as your business grows.

- **Enterprise Software Support (ESS)**

  Gain comprehensive, single-source, and global support for a wide range of server operating systems and Microsoft server applications.

For more information, consult the brochure Lenovo Operational Support Services for Data Centers.

Lenovo Managed Services

Achieve peak efficiency, high security, and minimal disruption with Lenovo's always-on Managed Services. Our real-time monitoring, 24x7 incident response, and problem resolution ensure your infrastructure operates seamlessly. With quarterly health checks for ongoing optimization and innovation, Lenovo's remote active monitoring boosts end-user experience and productivity by keeping your data center's hardware performing at its best.

Lenovo Managed Services provides continuous 24x7 remote monitoring (plus 24x7 call center availability) and proactive management of your data center using state-of-the-art tools, systems, and practices by a team of highly skilled and experienced Lenovo services professionals.

Quarterly reviews check error logs, verify firmware & OS device driver levels, and software as needed. We'll also maintain records of latest patches, critical updates, and firmware levels, to ensure you systems are providing business value through optimized performance.

Lenovo Sustainability Services

- **Asset Recovery Services**

  Lenovo Asset Recovery Services (ARS) provides a secure, seamless solution for managing end-of-life IT assets, ensuring data is safely sanitized while contributing to a more circular IT lifecycle. By maximizing the reuse or responsible recycling of devices, ARS helps businesses meet sustainability goals while recovering potential value from their retired equipment. For more information, see the Asset Recovery Services offering page.

- **CO2 Offset Services**

  Lenovo's CO2 Offset Services offer a simple and transparent way for businesses to take tangible action on their IT footprint. By integrating CO2 offsets directly into device purchases, customers can easily support verified climate projects and track their contributions, making meaningful progress toward their sustainability goals without added complexity.

- **Lenovo Certified Refurbished**

  Lenovo Certified Refurbished offers a cost-effective way to support IT circularity without compromising on quality and performance. Each device undergoes rigorous testing and certification, ensuring reliable performance and extending its lifecycle. With Lenovo's trusted certification, you gain peace of mind while making a more sustainable IT choice.

Lenovo TruScale

Lenovo TruScale XaaS is your set of flexible IT services that makes everything easier. Streamline IT procurement, simplify infrastructure and device management, and pay only for what you use – so your business is free to grow and go anywhere.

Lenovo TruScale is the unified solution that gives you simplified access to:

- The industry's broadest portfolio – from pocket to cloud – all delivered as a service
- A single-contract framework for full visibility and accountability
- The global scale to rapidly and securely build teams from anywhere
- Flexible fixed and metered pay-as-you-go models with minimal upfront cost
- The growth-driving combination of hardware, software, infrastructure, and solutions – all from one single provider with one point of accountability.

For information about Lenovo TruScale offerings that are available in your region, contact your local Lenovo sales representative or business partner.

Regulatory compliance

The SR630 V2 conforms to the following standards:

- ANSI/UL 62368-1
- IEC 62368-1 (CB Certificate and CB Test Report)
- FCC - Verified to comply with Part 15 of the FCC Rules, Class A
- Canada ICES-003, issue 7, Class A
- CSA C22.2 No. 62368-1
- CISPR 32, Class A, CISPR 35
- Japan VCCI, Class A
- Taiwan BSMI CNS13438, Class A; CNS14336-1; Section 5 of CNS15663
- CE, UKCA Mark (EN55032 Class A, EN62368-1, EN55024, EN55035, EN61000-3-2, EN61000-3-3, (EU) 2019/424, and EN50581-1 (RoHS))
- Korea KN32, Class A, KN35
- Russia, Belorussia and Kazakhstan, TP EAC 037/2016 (for RoHS)
- Russia, Belorussia and Kazakhstan, EAC: TP TC 004/2011 (for Safety); TP TC 020/2011 (for EMC)
- Australia/New Zealand AS/NZS CISPR 32, Class A; AS/NZS 62368.1
- UL Green Guard, UL2819
- Energy Star 4.0
- EPEAT (NSF/ ANSI 426) Bronze
- China CCC certificate, GB17625.1; GB4943.1; GB/T9254
- China CECP certificate, CQC3135
- China CELP certificate, HJ 2507-2011
- Japanese Energy-Saving Act
- Mexico NOM-019
- TUV-GS (EN62368-1, and EK1-ITB2000)
- India BIS 13252 (Part 1)
- Germany GS

External drive enclosures

The server supports attachment to external drive enclosures using a RAID controller with external ports or a SAS host bus adapter. Adapters supported by the server are listed in the SAS adapters for external storage section.

Note: Information provided in this section is for ordering reference purposes only. For the operating system and adapter support details, refer to the interoperability matrix for a particular storage enclosure that can be found on the Lenovo Data Center Support web site:
http://datacentersupport.lenovo.com

Table 89. External drive enclosures

Model	Description
4587HC1	Lenovo Storage D1212 Disk Expansion Enclosure (2U enclosure with 12x LFF drive bays)
4587HC2	Lenovo Storage D1224 Disk Expansion Enclosure (2U enclosure with 24x SFF drive bays)
7DAHCTO1WW	Lenovo ThinkSystem D4390 Direct Attached Storage (4U enclosure with 90x LFF drive bays)

For details about supported drives, adapters, and cables, see the following Lenovo Press Product Guides:

- Lenovo Storage D1212 and D1224
  http://lenovopress.lenovo.com/lp0512
- Lenovo ThinkSystem D4390
  https://lenovopress.lenovo.com/lp1681

External storage systems

Lenovo offers the ThinkSystem DE Series, ThinkSystem DG Series and ThinkSystem DM Series external storage systems for high-performance storage. See the DE Series, DG Series and DM Series product guides for specific controller models, expansion enclosures and configuration options:

- ThinkSystem DE Series Storage
  https://lenovopress.com/storage/thinksystem/de-series#rt=product-guide
- ThinkSystem DM Series Storage
  https://lenovopress.com/storage/thinksystem/dm-series#rt=product-guide
- ThinkSystem DG Series Storage
  https://lenovopress.com/storage/thinksystem/dg-series#rt=product-guide

External backup units

The server supports both USB-attached RDX backup units and SAS-attached tape drives.

The following table lists the available external SAS tape backup options.

Tip: Verify the end-to-end support of an IBM tape backup solution through the IBM System Storage Interoperation Center (SSIC): http://www.ibm.com/systems/support/storage/ssic

Table 90. External SAS backup options

Part number	Description
External SAS tape backup drives	
6160S8E	IBM TS2280 Tape Drive Model H8S
6160S9E	IBM TS2290 Tape Drive Model H9S
External SAS tape backup autoloaders	
6171S8R	IBM TS2900 Tape Autoloader w/LTO8 HH SAS
6171S9R	IBM TS2900 Tape Autoloader w/LTO9 HH SAS
External tape backup libraries	
6741B1F	IBM TS4300 3U Tape Library Base Unit - Max 48U
6741B3F	IBM TS4300 3U Tape Library Expansion Unit - Max 48U
SAS backup drives for TS4300 Tape Library	
01KP937	LTO 7 HH SAS Drive
01KP953	LTO 8 HH SAS Drive
02JH836	LTO 9 HH SAS Drive

For more information, see the list of Product Guides in the Backup units category:
https://lenovopress.com/servers/options/backup

The following table lists the external RDX backup options available.

Table 91. External RDX dock and cartridges

Part number	Feature code	Description
External RDX docks		
4T27A10725	B32R	ThinkSystem RDX External USB 3.0 Dock (No cartridge included with the drive)

For more information, see the Lenovo RDX USB 3.0 Disk Backup Solution product guide:
https://lenovopress.com/tips0894-rdx-usb-30

Fibre Channel SAN switches

Lenovo offers the ThinkSystem DB Series of Fibre Channel SAN switches for high-performance storage expansion. See the DB Series product guides for models and configuration options:

- ThinkSystem DB Series SAN Switches:
  https://lenovopress.com/storage/switches/rack#rt=product-guide

Uninterruptible power supply units

The following table lists the uninterruptible power supply (UPS) units that are offered by Lenovo.

Table 92. Uninterruptible power supply units

Part number	Description
Rack-mounted or tower UPS units - 100-125VAC	
7DD5A001WW	RT1.5kVA 2U Rack or Tower UPS-G2 (100-125VAC)
7DD5A003WW	RT3kVA 2U Rack or Tower UPS-G2 (100-125VAC)
Rack-mounted or tower UPS units - 200-240VAC	
7DD5A002WW	RT1.5kVA 2U Rack or Tower UPS-G2 (200-240VAC)
7DD5A005WW	RT3kVA 2U Rack or Tower UPS-G2 (200-240VAC)
7DD5A007WW	RT5kVA 3U Rack or Tower UPS-G2 (200-240VAC)
7DD5A008WW	RT6kVA 3U Rack or Tower UPS-G2 (200-240VAC)
7DD5A00AWW	RT11kVA 6U Rack or Tower UPS-G2 (200-240VAC)

† Only available in China and the Asia Pacific market.

For more information, see the list of Product Guides in the UPS category:
https://lenovopress.com/servers/options/ups

Power distribution units

The following table lists the power distribution units (PDUs) that are offered by Lenovo.

Table 93. Power distribution units

Part number	Feature code	Description	ANZ	ASEAN	Brazil	EET	MEA	RUCIS	WE	HTK	INDIA	JAPAN	LA	NA	PRC
0U Basic PDUs															
4PU7A93176	C0QH	0U 36 C13 and 6 C19 Basic 32A 1 Phase PDU v2	Y	Y	Y	Y	Y	Y	Y	Y	Y	N	Y	Y	Y
4PU7A93169	C0DA	0U 36 C13 and 6 C19 Basic 32A 1 Phase PDU	Y	Y	Y	Y	Y	Y	Y	Y	Y	N	Y	Y	Y
4PU7A93177	C0QJ	0U 24 C13/C15 and 24 C13/C15/C19 Basic 32A 3 Phase WYE PDU v2	Y	Y	Y	Y	Y	Y	Y	Y	Y	Y	Y	Y	Y
0U Switched and Monitored PDUs															
4PU7A93181	C0QN	0U 21 C13/C15 and 21 C13/C15/C19 Switched and Monitored 48A 3 Phase Delta PDU v2 (60A derated)	N	Y	N	N	N	N	N	Y	N	Y	N	Y	N
4PU7A93178	C0QK	0U 20 C13 and 4 C19 Switched and Monitored 32A 1 Phase PDU v2	Y	Y	Y	Y	Y	Y	Y	Y	Y	N	Y	Y	Y
4PU7A93171	C0D8	0U 20 C13 and 4 C19 Switched and Monitored 32A 1 Phase PDU	Y	Y	Y	Y	Y	Y	Y	Y	Y	N	Y	Y	Y
4PU7A93182	C0QP	0U 18 C13/C15 and 18 C13/C15/C19 Switched and Monitored 63A 3 Phase WYE PDU v2	Y	Y	Y	Y	Y	Y	Y	Y	Y	Y	Y	Y	Y
4PU7A93175	C0CS	0U 18 C13/C15 and 18 C13/C15/C19 Switched and Monitored 63A 3 Phase WYE PDU	Y	Y	Y	Y	Y	Y	Y	Y	Y	N	Y	Y	Y
4PU7A93180	C0QM	0U 18 C13/C15 and 18 C13/C15/C19 Switched and Monitored 32A 3 Phase WYE PDU v2	Y	Y	Y	Y	Y	Y	Y	Y	Y	Y	Y	Y	Y
4PU7A93179	C0QL	0U 16 C13/C15 and 16 C13/C15/C19 Switched and Monitored 24A 1 Phase PDU v2 (30A derated)	N	Y	N	N	N	N	N	Y	N	Y	N	Y	N
1U Switched and Monitored PDUs															
4PU7A90808	C0D4	1U 18 C19/C13 Switched and monitored 48A 3P WYE PDU V2 ETL	N	N	N	N	N	N	N	Y	N	Y	Y	Y	N
4PU7A81117	BNDV	1U 18 C19/C13 switched and monitored 48A 3P WYE PDU - ETL	N	N	N	N	N	N	N	N	N	N	N	Y	N
4PU7A90809	C0DE	1U 18 C19/C13 Switched and monitored 48A 3P WYE PDU V2 CE	Y	Y	Y	Y	Y	Y	Y	Y	Y	Y	Y	N	Y
4PU7A90810	C0DD	1U 18 C19/C13 Switched and monitored 80A 3P Delta PDU V2	N	N	N	N	N	N	N	Y	N	Y	Y	Y	N
4PU7A90811	C0DC	1U 12 C19/C13 Switched and monitored 32A 3P WYE PDU V2	Y	Y	Y	Y	Y	Y	Y	Y	Y	Y	Y	Y	Y
4PU7A90812	C0DB	1U 12 C19/C13 Switched and monitored 60A 3P Delta PDU V2	N	N	N	N	N	N	N	Y	N	Y	Y	Y	N
Line cords for 1U PDUs that ship without a line cord															
40K9611	6504	4.3m, 32A/380-415V, EPDU/IEC 309 3P+N+G 3ph wye (non-US) Line Cord	Y	Y	Y	Y	Y	Y	Y	Y	Y	Y	Y	Y	Y
40K9612	6502	4.3m, 32A/230V, EPDU to IEC 309 P+N+G (non-US) Line Cord	Y	Y	Y	Y	Y	Y	Y	Y	Y	Y	Y	Y	Y

Part number	Feature code	Description	ANZ	ASEAN	Brazil	EET	MEA	RUCIS	WE	HTK	INDIA	JAPAN	LA	NA	PRC
40K9613	6503	4.3m, 63A/230V, EPDU to IEC 309 P+N+G (non-US) Line Cord	Y	Y	Y	Y	Y	Y	Y	Y	Y	Y	Y	Y	Y
40K9614	6500	4.3m, 30A/208V, EPDU to NEMA L6-30P (US) Line Cord	Y	Y	Y	Y	Y	Y	Y	Y	Y	Y	Y	Y	Y
40K9615	6501	4.3m, 60A/208V, EPDU to IEC 309 2P+G (US) Line Cord	N	N	Y	N	N	N	Y	N	N	Y	Y	Y	N

For more information, see the Lenovo Press documents in the PDU category:
https://lenovopress.com/servers/options/pdu

Rack cabinets

The following table lists the supported rack cabinets.

Table 94. Rack cabinets

Model	Description
93072RX	25U Standard Rack (1000mm)
93072PX	25U Static S2 Standard Rack (1000mm)
7D6DA007WW	ThinkSystem 42U Onyx Primary Heavy Duty Rack Cabinet (1200mm)
7D6DA008WW	ThinkSystem 42U Pearl Primary Heavy Duty Rack Cabinet (1200mm)
7D6EA009WW	ThinkSystem 48U Onyx Primary Heavy Duty Rack Cabinet (1200mm)
7D6EA00AWW	ThinkSystem 48U Pearl Primary Heavy Duty Rack Cabinet (1200mm)
1410O42	Lenovo EveryScale 42U Onyx Heavy Duty Rack Cabinet
1410P42	Lenovo EveryScale 42U Pearl Heavy Duty Rack Cabinet
1410O48	Lenovo EveryScale 48U Onyx Heavy Duty Rack Cabinet
1410P48	Lenovo EveryScale 48U Pearl Heavy Duty Rack Cabinet
93604PX	42U 1200mm Deep Dynamic Rack
93614PX	42U 1200mm Deep Static Rack
93634PX	42U 1100mm Dynamic Rack
93074RX	42U Standard Rack (1000mm)

For specifications about these racks, see the Lenovo Rack Cabinet Reference, available from:
https://lenovopress.com/lp1287-lenovo-rack-cabinet-reference

For more information, see the list of Product Guides in the Rack cabinets category:
https://lenovopress.com/servers/options/racks

KVM console options

The following table lists the supported KVM consoles.

Table 95. KVM console

Part number	Description
4XF7A84188	ThinkSystem 18.5" LCD console (with US English keyboard)

The following table lists the available KVM switches and the options that are supported with them.

Table 97. KVM switches and options

Part number	Description
KVM Console switches	
1754D1X	Global 2x2x16 Console Manager (GCM16)
1754A2X	Local 2x16 Console Manager (LCM16)
1754A1X	Local 1x8 Console Manager (LCM8)
Cables for GCM and LCM Console switches	
46M5383	Virtual Media Conversion Option Gen2 (VCO2)
46M5382	Serial Conversion Option (SCO)

For more information, see the list of Product Guides in the KVM Switches and Consoles category:
http://lenovopress.com/servers/options/kvm

Lenovo Financial Services

Why wait to obtain the technology you need now? No payments for 90 days and predictable, low monthly payments make it easy to budget for your Lenovo solution.

- **Flexible**

  Our in-depth knowledge of the products, services and various market segments allows us to offer greater flexibility in structures, documentation and end of lease options.

- **100% Solution Financing**

  Financing your entire solution including hardware, software, and services, ensures more predictability in your project planning with fixed, manageable payments and low monthly payments.

- **Device as a Service (DaaS)**

  Leverage latest technology to advance your business. Customized solutions aligned to your needs. Flexibility to add equipment to support growth. Protect your technology with Lenovo's Premier Support service.

- **24/7 Asset management**

  Manage your financed solutions with electronic access to your lease documents, payment histories, invoices and asset information.

- **Fair Market Value (FMV) and $1 Purchase Option Leases**

  Maximize your purchasing power with our lowest cost option. An FMV lease offers lower monthly payments than loans or lease-to-own financing. Think of an FMV lease as a rental. You have the flexibility at the end of the lease term to return the equipment, continue leasing it, or purchase it for the fair market value. In a $1 Out Purchase Option lease, you own the equipment. It is a good option when you are confident you will use the equipment for an extended period beyond the finance term. Both lease types have merits depending on your needs. We can help you determine which option will best meet your technological and budgetary goals.

Ask your Lenovo Financial Services representative about this promotion and how to submit a credit application. For the majority of credit applicants, we have enough information to deliver an instant decision and send a notification within minutes.

Seller training courses

The following sales training courses are offered for employees and partners (login required). Courses are listed in date order.

1. **Family Portfolio: Server Component Options**
   2025-07-21 | 20 minutes | Employees and Partners

   This course covers opportunities that are available to upsell server components. By upselling the correct components, you can increase the size and revenue of the original sale.
   After completing this course, you should be able to:
   • Identify the opportunities for an upsell
   • Recognize when specific products should be discussed
   • Emphasize how a product benefits the customer
   • Identify keywords that indicate upsell opportunities

   Tags: Server, Storage

   Published: 2025-07-21
   Length: 20 minutes

   Start the training:
   Employee link: Grow@Lenovo
   Partner link: Lenovo 360 Learning Center

   Course code: SXXW1109r2
2. **Family Portfolio: ThinkSystem Rack and Tower Servers Powered by Intel**
   2025-06-23 | 25 minutes | Employees and Partners

   This course is designed to give Lenovo sales and partner representatives a foundation of the ThinkSystem Intel Rack and Tower server family.

   After completing this course, you will be able to:
   • Identify products within this ThinkSystem server family
   • Describe features of this family
   • Recognize when a specific product should be selected

   Tags: Server, ThinkSystem

   Published: 2025-06-23
   Length: 25 minutes

   Start the training:
   Employee link: Grow@Lenovo
   Partner link: Lenovo 360 Learning Center

   Course code: SXXW1204r14
3. **ThinkSystem Rack and Tower Introduction for ISO Client Managers**
   2025-06-16 | 20 minutes | Employees Only

   In this course, you will learn about Lenovo's Data Center Portfolio, its ThinkSystem Family and the key features of the Rack and Tower servers. It will equip you with foundational knowledge which you can then expand upon by participating in the facilitated session of the curriculum.

   Tags: Server, ThinkSystem

   Published: 2025-06-16
   Length: 20 minutes

   Start the training:
   Employee link: Grow@Lenovo

   Course code: DSRTO101r2_JP

4. **VTT HPC: AI and the Impact on the Environment**
   2025-06-11 | 58 minutes | Employees Only

   Please join us as Matthew Ziegler, Director of Lenovo Neptune and Sustainability speaks with us about AI and the Impact on the Environment.

   Topics will include:

   - Why is ESG essential for your customer?
   - How to find and read an eco declaration
   - What is a product carbon footprint?
   - Demo of the Lenovo Capacity Planner

   Tags: Advanced DataCenter, Artificial Intelligence (AI), Environmental Social Governance (ESG), High-Performance Computing (HPC), Server

   Published: 2025-06-11
   Length: 58 minutes

   Start the training:
   Employee link: Grow@Lenovo

   Course code: DVHPC223

5. **Lenovo Data Center Product Portfolio**
   2025-06-11 | 20 minutes | Employees and Partners

   This course introduces the Lenovo data center portfolio, and covers servers, storage, storage networking, and software-defined infrastructure products. After completing this course about Lenovo data center products, you will be able to identify product types within each data center family, describe Lenovo innovations that this product family or category uses, and recognize when a specific product should be selected.

   Course objectives:
   1.Identify product types within each data center family
   2.Describe the features of the product family or category
   3.Recognize when a specific product should be selected

   Tags: Advanced DataCenter, DataCenter Products, Server, ThinkAgile, ThinkEdge, ThinkSystem

   Published: 2025-06-11
   Length: 20 minutes

   Start the training:
   Employee link: Grow@Lenovo
   Partner link: Lenovo 360 Learning Center

   Course code: SXXW1110r8

6. **Partner Technical Webinar - RTX Pro 6000**
   2025-05-22 | 60 minutes | Employees and Partners

   In this 60-minute replay, Allen Bourgoyne, Product Marketing for NVIDIA, presented the newly announced RTX Pro 6000 Blackwell Server Edition GPU.

   Tags: Artificial Intelligence (AI)

   Published: 2025-05-22
   Length: 60 minutes

   Start the training:
   Employee link: Grow@Lenovo
   Partner link: Lenovo 360 Learning Center

   Course code: MAY1525

7. **Partner Technical Webinar - DCSC Improvements - MAY0225**
   2025-05-05 | 60 minutes | Employees and Partners

   In this 60-minute replay, new improvements to DCSC were reviewed. Joe Allen, Lenovo NA LETS, presented the new PCI wizard and discussed RAID adapters. Ryan Tuttle, Lenovo NA LETS presented Spreadsheet import, Autocorrect and Expanded selections on by default. Joe Murphy, Lenovo NA LETS closed out with review of Error Message improvements and location of ThinkAgile MX and VX in the DCSC menus.

   Tags: Technical Sales

   Published: 2025-05-05
   Length: 60 minutes

   Start the training:
   Employee link: Grow@Lenovo
   Partner link: Lenovo 360 Learning Center

   Course code: MAY0225

8. **Family Portfolio: Storage Controller Options**
   2025-03-03 | 25 minutes | Employees and Partners

   This course covers the storage controller options available for use in Lenovo servers. The classes of storage controller are discussed, along with a discussion of where they are used, and which to choose.

   After completing this course, you will be able to:
   • Describe the classes of storage controllers
   • Discuss where each controller class is used
   • Describe the available options in each controller class

   Tags: Sales, Storage

   Published: 2025-03-03
   Length: 25 minutes

   Start the training:
   Employee link: Grow@Lenovo
   Partner link: Lenovo 360 Learning Center

   Course code: SXXW1111r2

9. **ThinkSystem Rack and Tower Introduction for ISO Client Managers**
   2024-12-10 | 20 minutes | Employees Only

   In this course, you will learn about Lenovo's Data Center Portfolio, its ThinkSystem Family and the key features of the Rack and Tower servers. It will equip you with foundational knowledge which you can then expand upon by participating in the facilitated session of the curriculum.

   Course Objectives:
   • By the end of this course, you should be able to:
   • Identify Lenovo's main data center brands.
   • Describe the key components of the ThinkSystem Family servers.
   • Differentiate between the Rack and Tower servers of the ThinkSystem Family.
   • Understand the value Rack and Tower servers can provide to customers.

   Tags: Server, ThinkSystem

   Published: 2024-12-10
   Length: 20 minutes

   Start the training:
   Employee link: Grow@Lenovo

   Course code: DSRTO101r2

10. **Partner Technical Webinar - Server Update with Mark Bica**
    2024-11-26 | 60 minutes | Employees and Partners

    In this 60-minute replay, Mark Bica, Lenovo Product Manager gave an update on the server portfolio. Mark presented on the new V4 Intel servers with Xeon 6 CPUs. He reviewed where the new AMD 5th Gen EPYC CPUs will be used in our servers. He followed with a review of the GPU dense servers including SR680, SR680a, SR575 and SR780a. Mark concluded with a review of the SC777 and SC750 that were introduced at TechWorld.

    Tags: Server

    Published: 2024-11-26
    Length: 60 minutes

    Start the training:
    Employee link: Grow@Lenovo
    Partner link: Lenovo 360 Learning Center

    Course code: 112224

11. **Partner Technical Webinar - LenovoPress updates and LPH Demo**
2024-11-13 | 60 minutes | Employees and Partners

In this 60-minute replay, we had 3 topics. First, David Watts, Lenovo Sr Manager LenovoPress, gave an update on LenovoPress and improvements to finding Seller Training Courses (both partner and Lenovo). Next, Ryan Tuttle, Lenovo LETS Solution Architect, gave a demo of Lenovo Partner Hub (LPH) including how to find replays of Partner Webinars in LPL. Finally, Joe Murphy, Lenovo Sr Manager of LETS NA, gave a quick update on the new Stackable Warranty Options in DCSC.

Tags: Technical Sales

Published: 2024-11-13
Length: 60 minutes

Start the training:
Employee link: Grow@Lenovo
Partner link: Lenovo 360 Learning Center

Course code: 110824

12. **Virtual Facilitated Session - ThinkSystem Rack and Tower Primer for ISO Client Managers**
2024-10-31 | 90 minutes | Employees Only

In this Virtual Instructor-Led Training Session, ISO Client Managers will be able to build on the knowledge gained in Module 1 (eLearning) of the ThinkSystem Rack and Tower Server Primer for ISO Client Managers curriculum.

IMPORTANT! Module 1 (eLearning) must be completed to be eligible to participate in this session. Please note that places are subject to availability. If you are selected, you will receive the invite to this session via email.

Tags: Sales, Server, ThinkSystem

Published: 2024-10-31
Length: 90 minutes

Start the training:
Employee link: Grow@Lenovo

Course code: DSRTO102

13. **Partner Technical Webinar - OneIQ**
2024-07-15 | 60 minutes | Employees and Partners

In this 60-minute replay, Peter Grant, Field CTO for OneIQ, reviewed and demo'd the capabilities of OneIQ including collecting data and analyzing. Additionally, Peter and the team discussed how specific partners (those with NA Channel SA coverage) will get direct access to OneIQ and other partners can get access to OneIQ via Distribution or the NA LETS team.

Tags: Technical Sales

Published: 2024-07-15
Length: 60 minutes

Start the training:
Employee link: Grow@Lenovo
Partner link: Lenovo 360 Learning Center

Course code: 071224

14. **SAP Webinar for Lenovo Sellers: Lenovo Portfolio Update for SAP Landscapes**
2024-06-04 | 60 minutes | Employees Only

Join Mark Kelly, Advisory IT Architect with the Lenovo Global SAP Center of Competence as he discusses:
•Challenges in the SAP environment
•Lenovo On-premise Solutions for SAP
•Lenovo support resources for SAP solutions

Tags: SAP, ThinkAgile, ThinkEdge, ThinkSystem

Published: 2024-06-04
Length: 60 minutes

Start the training:
Employee link: Grow@Lenovo

Course code: DSAPF101

15. **Family Introduction: Rack and Tower**
2024-01-19 | 11 minutes | Employees and Partners

This course is designed to give Lenovo sales and partner representatives a foundation on the characteristics of the rack and tower server family. As an introduction to the family, this course also includes positioning, when to use a product, and keywords a client may use when discussing a rack product.

Course Objectives:
•Family Characteristics
•Priority Positioning
•Product Usage
•Keywords and Phrases

Tags: Server

Published: 2024-01-19
Length: 11 minutes

Start the training:
Employee link: Grow@Lenovo
Partner link: Lenovo 360 Learning Center

Course code: SXXW1100r3

16. **VTT: SAP HANA Transition and Refresh Opportunity - July 2023**
    2023-07-14 | 60 minutes | Employees Only

    In this session, we cover:
    - What Next for SAP Clients?
    - Lenovo Opportunity
    - Lenovo Portfolio for SAP Solutions
    - RISE with SAP

    Tags: Data Management, SAP, ThinkAgile, ThinkEdge, ThinkSystem

    Published: 2023-07-14
    Length: 60 minutes

    Start the training:
    Employee link: Grow@Lenovo

    Course code: DVDAT202

Related publications and links

For more information, see these resources:

- Lenovo ThinkSystem SR630 V2 product page:
  https://www.lenovo.com/us/en/data-center/servers/racks/ThinkSystem-SR630-V2/p/77XX7SR63V2
- Interactive 3D Tour of the ThinkSystem SR630 V2:
  https://lenovopress.com/lp1423
- Lenovo Press video walk-through of the ThinkSystem SR630 V2:
  https://lenovopress.com/lp1402
- ThinkSystem SR630 V2 drivers and support
  http://datacentersupport.lenovo.com/products/servers/thinksystem/sr630v2/7z71/downloads
- Lenovo ThinkSystem SR630 V2 product publications:
  http://thinksystem.lenovofiles.com/help/index.jsp
  - Quick Start
  - Rack Installation Guide
  - Setup Guide
  - Hardware Maintenance Manual
  - Messages and Codes Reference
  - Memory Population Reference
- ServerProven hardware compatibility:
  http://www.lenovo.com/us/en/serverproven

Related product families

Product families related to this document are the following:

- 2-Socket Rack Servers
- ThinkSystem SR630 V2 Server

Notices

Lenovo may not offer the products, services, or features discussed in this document in all countries. Consult your local Lenovo representative for information on the products and services currently available in your area. Any reference to a Lenovo product, program, or service is not intended to state or imply that only that Lenovo product, program, or service may be used. Any functionally equivalent product, program, or service that does not infringe any Lenovo intellectual property right may be used instead. However, it is the user's responsibility to evaluate and verify the operation of any other product, program, or service. Lenovo may have patents or pending patent applications covering subject matter described in this document. The furnishing of this document does not give you any license to these patents. You can send license inquiries, in writing, to:

Lenovo (United States), Inc.
8001 Development Drive
Morrisville, NC 27560
U.S.A.
Attention: Lenovo Director of Licensing

LENOVO PROVIDES THIS PUBLICATION ”AS IS” WITHOUT WARRANTY OF ANY KIND, EITHER EXPRESS OR IMPLIED, INCLUDING, BUT NOT LIMITED TO, THE IMPLIED WARRANTIES OF NON-INFRINGEMENT, MERCHANTABILITY OR FITNESS FOR A PARTICULAR PURPOSE. Some jurisdictions do not allow disclaimer of express or implied warranties in certain transactions, therefore, this statement may not apply to you.

This information could include technical inaccuracies or typographical errors. Changes are periodically made to the information herein; these changes will be incorporated in new editions of the publication. Lenovo may make improvements and/or changes in the product(s) and/or the program(s) described in this publication at any time without notice.

The products described in this document are not intended for use in implantation or other life support applications where malfunction may result in injury or death to persons. The information contained in this document does not affect or change Lenovo product specifications or warranties. Nothing in this document shall operate as an express or implied license or indemnity under the intellectual property rights of Lenovo or third parties. All information contained in this document was obtained in specific environments and is presented as an illustration. The result obtained in other operating environments may vary. Lenovo may use or distribute any of the information you supply in any way it believes appropriate without incurring any obligation to you.

Any references in this publication to non-Lenovo Web sites are provided for convenience only and do not in any manner serve as an endorsement of those Web sites. The materials at those Web sites are not part of the materials for this Lenovo product, and use of those Web sites is at your own risk. Any performance data contained herein was determined in a controlled environment. Therefore, the result obtained in other operating environments may vary significantly. Some measurements may have been made on development-level systems and there is no guarantee that these measurements will be the same on generally available systems. Furthermore, some measurements may have been estimated through extrapolation. Actual results may vary. Users of this document should verify the applicable data for their specific environment.

© Copyright Lenovo 2025. All rights reserved.

This document, LP1391, was created or updated on May 20, 2025.

Send us your comments in one of the following ways:

- Use the online Contact us review form found at:
  https://lenovopress.lenovo.com/LP1391
- Send your comments in an e-mail to:
  comments@lenovopress.com

This document is available online at https://lenovopress.lenovo.com/LP1391.

Trademarks

Lenovo and the Lenovo logo are trademarks or registered trademarks of Lenovo in the United States, other countries, or both. A current list of Lenovo trademarks is available on the Web at https://www.lenovo.com/us/en/legal/copytrade/.

The following terms are trademarks of Lenovo in the United States, other countries, or both:
Lenovo®
AnyBay®
ServerProven®
System x®
ThinkAgile®
ThinkEdge®
ThinkShield®
ThinkSystem®
XClarity®

The following terms are trademarks of other companies:

AMD, Alveo™, Solarflare™, and Xilinx are trademarks of Advanced Micro Devices, Inc.

Intel®, Intel Optane®, and Xeon® are trademarks of Intel Corporation or its subsidiaries.

Linux® is the trademark of Linus Torvalds in the U.S. and other countries.

Microsoft®, ActiveX®, Georgia®, Hyper-V®, PowerShell, Windows PowerShell®, Windows Server®, and Windows® are trademarks of Microsoft Corporation in the United States, other countries, or both.

SPECpower® is a trademark of the Standard Performance Evaluation Corporation (SPEC).

IBM®, IBM Security®, and ibm.com® are trademarks of IBM in the United States, other countries, or both.

Other company, product, or service names may be trademarks or service marks of others.