Lenovo ThinkSystem SR550 Server (Xeon SP Gen 1 / Gen 2)

Product Guide

The Lenovo ThinkSystem SR550 dual-socket 2U rack server is ideal for small to large organizations that need industry-leading reliability, management, and security, as well as cost-optimized performance, storage capacity, and flexible I/O. Designed to handle a wide range of workloads, the SR550 server cost-effectively performs complex analytics on structured and unstructured data, speeds transactional systems, and powers through collaboration workloads with ever-growing data sets and large files shared within an organization.

Featuring the second generation of the Intel Xeon Processor Scalable Family, the SR550 server offers a balance of performance, capacity and value. The SR550 server supports up to two processors, up to 768 GB of 2933 MHz TruDDR4 memory, up to 16x 2.5-inch or up to 12x 3.5-inch drive bays with an extensive choice of SAS/SATA SSDs and SAS/SATA HDDs, and flexible and scalable I/O expansion options with a LOM slot and up to 6x PCIe slots. The built-in next-generation Lenovo XClarity Controller provides advanced service processor control, monitoring, and alerting functions.

The following figure shows the ThinkSystem SR550 server with 3.5-inch front hot-swap drives. Other drive configurations are also available.



Figure 1. Lenovo ThinkSystem SR550 with 3.5-inch hot-swap drives

Did you know?

The SR550 server delivers impressive compute power per watt, featuring 80 PLUS Titanium and Platinum redundant power supplies that can deliver 96% (Titanium) or 94% (Platinum) efficiency at 50% load when connected to a 200 - 240 V AC power source.

The SR550 server is designed to meet ASHRAE A4 standards (up to 45 °C [113 °F]) in select configurations, which enable customers to lower energy costs, while still maintaining world-class reliability.

Key features

The SR550 server offers a balance of processing power, storage capacity, and cost for small and medium businesses up to the large enterprise. Ease of use and comprehensive systems management tools help make deployment easier and efficient design improves your business environment and helps save operational costs.

Scalability and performance

The SR550 server offers numerous features to boost performance, improve scalability, and reduce costs:

- Improves productivity by offering superior system performance with the second generation of the Intel Xeon Processor Scalable Family with up to 22-core processors, up to 30.25 MB of last level cache (LLC), up to 2933 MHz memory speeds, and up to 10.4 GT/s Ultra Path Interconnect (UPI) links.
    - Support for up to two processors, 44 cores, and 88 threads allows to maximize the concurrent execution of multithreaded applications.
    - Intelligent and adaptive system performance with energy efficient Intel Turbo Boost 2.0 Technology allows CPU cores to run at maximum speeds during peak workloads by temporarily going beyond processor thermal design power (TDP).
    - Intel Hyper-Threading Technology boosts performance for multithreaded applications by enabling simultaneous multithreading within each processor core, up to two threads per core.
    - Intel Virtualization Technology integrates hardware-level virtualization hooks that allow operating system vendors to better utilize the hardware for virtualization workloads.
    - Intel Speed Select Technology provides improvements in server utilization and guaranteed per-core performance service levels with more granular control over processor performance.
    - Intel Deep Learning Boost (Vector Neural Network Instruction set [VNNI]) is designed to deliver significant, more efficient Deep Learning (Inference) acceleration for high-performance Artificial Intelligence (AI) workloads.
    - Intel Advanced Vector Extensions 512 (AVX-512) enable acceleration of enterprise-class and high performance computing (HPC) workloads.
- Helps maximize system performance for data intensive applications with up to 2933 MHz memory speeds and up to 768 GB of memory capacity.
- Offers flexible and scalable internal storage in a 2U rack form factor with up to 16x 2.5-inch drives for performance-optimized configurations or up to 12x 3.5-inch drives for capacity-optimized configurations, providing a wide selection of SAS/SATA HDDs/SSDs.
- Provides I/O scalability with a LOM slot and up to six PCI Express (PCIe) 3.0 I/O expansion slots in a 2U rack form factor.
- Reduces I/O latency and increases overall system performance with Intel Integrated I/O Technology that embeds the PCI Express 3.0 controller into the Intel Xeon Processor Scalable Family.

Availability and serviceability

The SR550 server provides many features to simplify serviceability and increase system uptime:

- Designed to run 24 hours a day, 7 days a week
- Offers protection in the event of a non-correctable memory failure with Single Device Data Correction (SDDC, also known as Chipkill, requires x4-based DIMMs), Adaptive Double Device Data Correction (ADDDC, also known as Redundant Bit Steering [RBS], requires x4-based DIMMs and Intel Xeon Gold or Platinum processors), memory mirroring, and memory rank sparing.
- Provides easy access to upgrades and serviceable parts (such as processors, memory DIMMs, and adapter cards) with tool-less cover removal.
- Offers affordable data protection with software RAID and Simple Swap drives and advanced hardware RAID data redundancy with hot-swap drives.

- Provides availability for applications with redundant hot-swap power supplies and redundant non-hot-swap fans.
- Allows preventive actions in advance of possible failure, thereby increasing server uptime and application availability with Proactive Platform Alerts (including PFA and SMART alerts) for processors, voltage regulators, memory, internal storage (SAS/SATA HDDs and SSDs, M.2 storage), fans, power supplies, RAID controllers, and server ambient and sub-component temperatures.
- Continuously monitors system parameters, triggers alerts, and performs recovery actions in case of failure to minimize downtime with Built-in XClarity Controller (XCC).
- Provides quick access to system status, firmware, network, health, and alerts information via Virtual Operator Panel from the XClarity Mobile App running on the Android or iOS mobile device that is connected to the front USB port with XClarity Controller access.
- Speeds up troubleshooting tasks to reduce service time with diagnostics built into the XClarity Provisioning Manager.

Manageability and security

Powerful systems management features simplify local and remote management of the SR550 server and deliver enterprise-class data protection:

- Provides advanced service processor control, monitoring, and alerting functions with XClarity Controller, a next generation service processor.
- Improves Unified Extensible Firmware Interface (UEFI) system setup, configuration, updates, simplified error handling, and operating system deployment with the embedded XClarity Provisioning Manager.
- Offers XClarity Essentials software tools that can help you set up, use, and maintain the server.
- Increases uptime, reduces costs, and improves productivity through advanced server management capabilities with Lenovo XClarity Administrator that provides comprehensive hardware management.
- Provides on-the-go monitoring and management of devices in XClarity Administrator from anywhere with the Lenovo XClarity mobile app, which can help improve efficiency and reduce downtime risks.
- Centralizes infrastructure resource management with Lenovo XClarity Integrators for VMware vCenter and Microsoft System Center, extending XClarity Administrator features to virtualization management software tools and enabling users to deploy and manage infrastructure end-to-end.
- Offers advanced cryptographic functionality (such as digital signatures and remote attestation) with an integrated Trusted Platform Module (TPM) or optional Trusted Cryptographic Module (TCM) or Nationz TPM (available only in PRC).
- Keeps user data safe with Lenovo Business Vantage, a security software tool suite designed to work with the Trusted Cryptographic Module (available only in PRC).
- Offers enterprise-class data protection with advanced RAID and optional self-encrypting drives.
- Provides faster, stronger encryption with industry-standard AES NI support.
- Helps prevent certain classes of malicious buffer overflow attacks with Intel Execute Disable Bit functionality, when combined with a supporting operating system.
- Enhances security through hardware-based resistance to malicious software attacks with Intel Trusted Execution Technology, allowing an application to run in its own isolated space, protected from all other software running on a system.

Energy efficiency

The SR550 server offers the following energy-efficiency features to save energy, reduce operational costs, increase energy availability, and contribute to the green environment:

- Delivers impressive compute power per watt, featuring 80 PLUS Titanium and Platinum redundant power supplies.
- Enables customers to lower energy costs with design to meet ASHRAE A4 standards in select configurations.
- Reduces power drawn with Intel Intelligent Power Capability that powers individual processor elements on and off as needed.
- Helps reduce power consumption with variable speed fans.
- Helps achieve lower heat output and reduced cooling needs with Lenovo XClarity Energy Manager that provides advanced data center power notification, analysis, and policy-based management.

Components and connectors

The following figure shows the front of the SR550 server with 8x 3.5-inch drive bays.

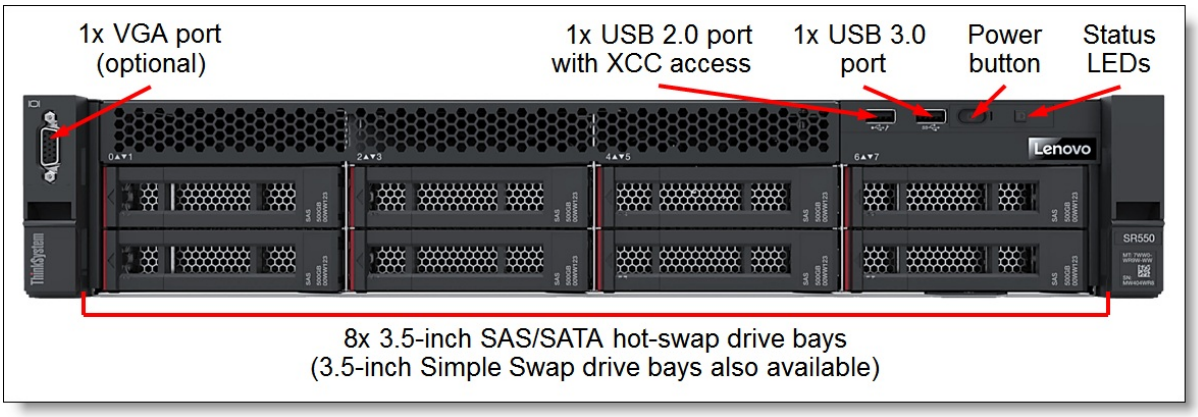

Figure 2. Front view of the SR550: 8x 3.5-inch drive bays

The following figure shows the front of the SR550 server with 12x 3.5-inch drive bays.

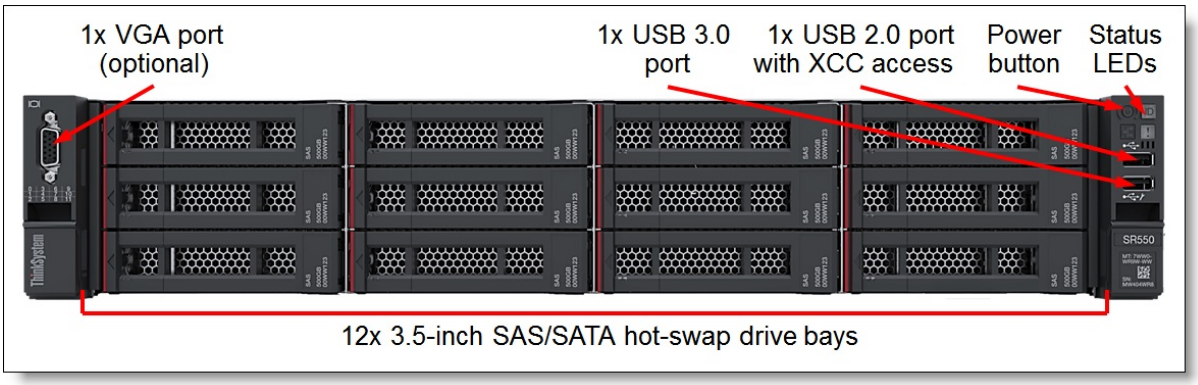

Figure 3. Front view of the SR550: 12x 3.5-inch drive bays

The following figure shows the front of the SR550 server with up to 16x 2.5-inch drive bays.

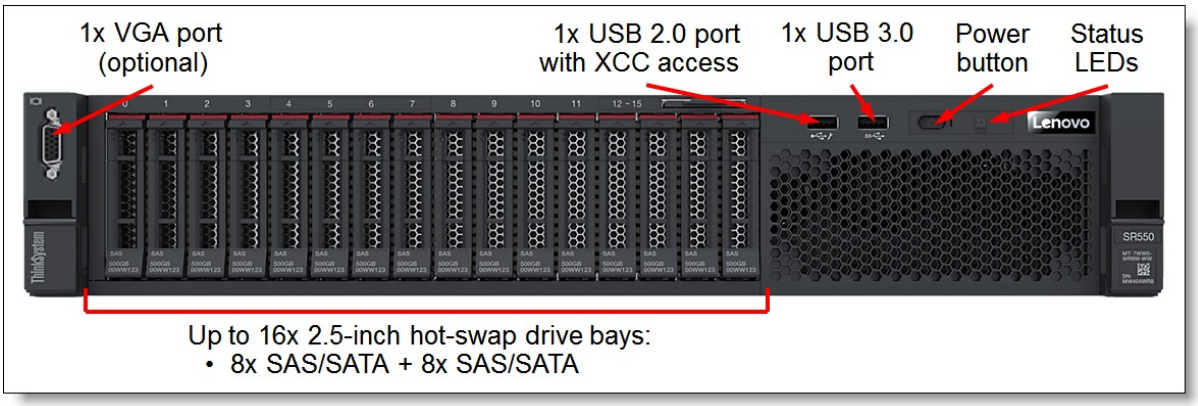

Figure 4. Front view of the SR550: Up to 16x 2.5-inch drive bays

The front of the SR550 server includes the following components:

- Up to 16x 2.5-inch or 12x 3.5-inch hot-swap, or 8x 3.5-inch hot-swap or Simple Swap drive bays.
- One VGA port (optional).
- One USB 3.0 port.
- One USB 2.0 port with XClarity Controller access.
- Power button.
- Status LEDs.

The following figure shows the rear of the SR550 server.

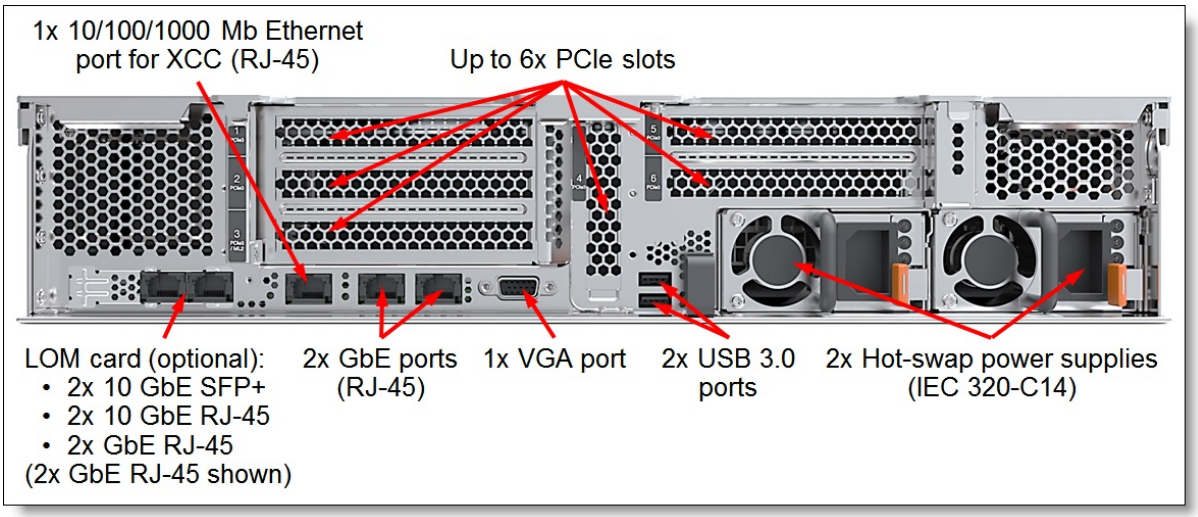

Figure 5. Rear view of the SR550

The rear of the SR550 server includes the following components:

- Up to six PCIe expansion slots (depending on the riser cards selected).
- One LOM card slot.
- One 1 GbE port for XClarity Controller.
- One VGA port.
- Two USB 3.0 ports.
- Up to two hot-swap power supplies.

The following figure shows the locations of key components inside the SR550 server.

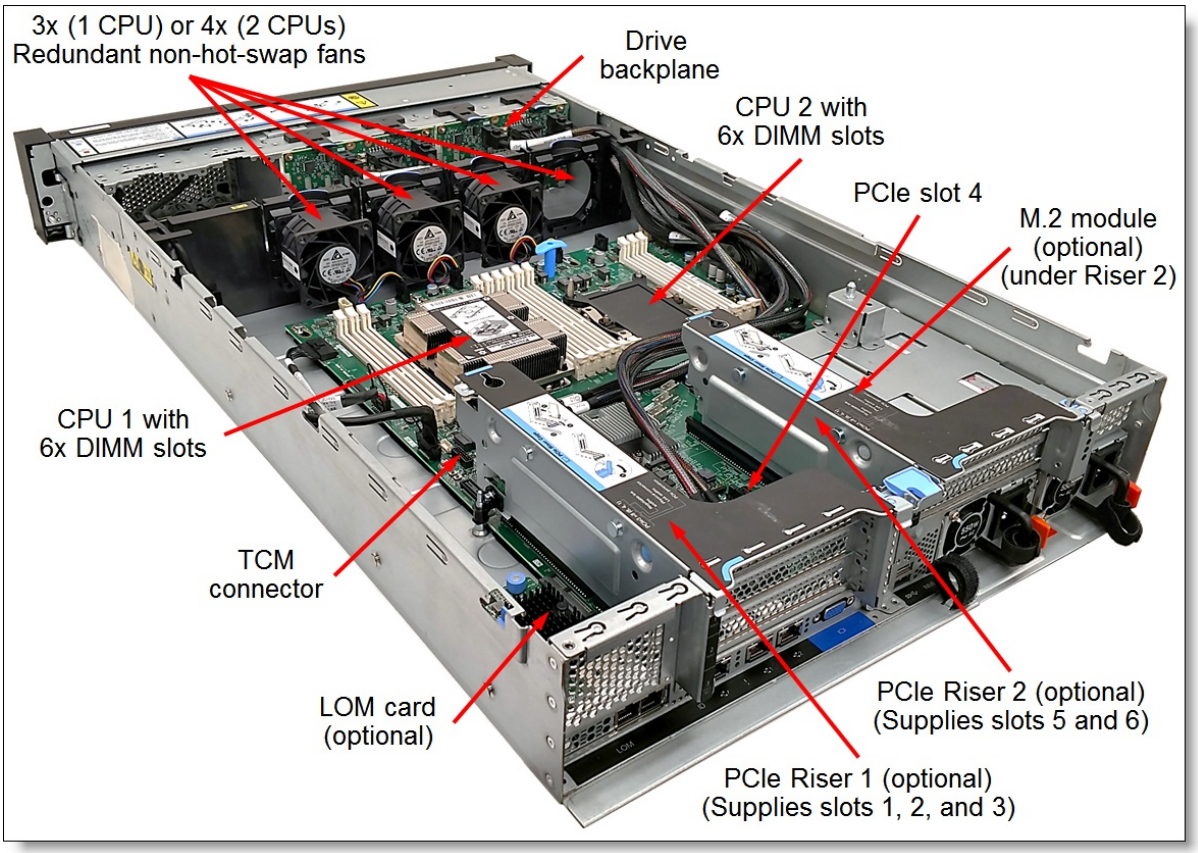

Figure 6. Internal view of the SR550

The following key components are located inside the SR550 server:

- Up to two processors.
- 12 DIMM slots (6 DIMM slots per processor).
- Drive backplanes.
- One M.2 module connector.
- One LOM card connector.
- One onboard PCIe slot 4.
- Two slots for PCIe riser cards.
- One TCM connector.
- Three (one processor) or four (two processors) non-hot-swap system fans.

System specifications

The following table lists the system specifications for the SR550 server.

Table 1. SR550 system specifications

Attribute	Specification
Machine types	7X03 - 1 year warranty 7X04 - 3 year warranty
Form factor	2U rack-mount.

Attribute	Specification
Processor	Up to two Intel Xeon Gen 2 Bronze, Silver, Gold, or Platinum processors: • Up to 22 cores (1.9 GHz core speeds) • Up to 3.8 GHz core speeds (4 cores) • Two UPI links up to 10.4 GT/s each • Up to 30.25 MB cache • Up to 2933 MHz memory speed 1st Gen Intel Xeon processors are also supported.
Chipset	Intel C622.
Memory	Up to 12 DIMM sockets (6 DIMMs per processor; six memory channels per processor with one DIMM per channel). Support for RDIMMs and LRDIMMs. Memory types cannot be intermixed. Memory speed up to 2933 MHz depending on the processor selected.
Memory protection	Error correction code (ECC), SDDC (for x4-based memory DIMMs), ADDDC (for x4-based memory DIMMs, requires Intel Xeon Gold or Platinum processors), memory mirroring, memory rank sparing, patrol scrubbing, and demand scrubbing.
Memory capacity	Up to 768 GB with 12x 64 GB RDIMMs (Up to 384 GB per processor).
Drive bays	• 8 LFF SATA Simple Swap drive bays • 8 LFF SAS/SATA hot-swap drive bays • 12 LFF SAS/SATA hot-swap drive bays • Up to 16 SFF hot-swap drive bays: 8x 2.5" SAS/SATA + 8x 2.5" SAS/SATA

Internal storage capacity	• 2.5-inch drives:
	  ◦ 491.52TB using 16x 30.72TB 2.5-inch SAS/SATA SSDs
	  ◦ 38.4TB using 16x 2.4TB 2.5-inch HDDs
	• 3.5-inch drives:
	  ◦ 240TB using 12x 20TB 3.5-inch HDDs
	  ◦ 184.32TB using 12x 15.36TB 3.5-inch SAS/SATA SSDs

Storage controller	• 6 Gb Onboard SATA AHCI • 6 Gb Onboard SATA RAID (Intel RSTe) • 12 Gb SAS/SATA RAID adapters with up to 8GB flash-backed cache • 12 Gb SAS/SATA HBA (non-RAID)
Optical drive bays	None. Support for an external USB DVD RW Optical Disk Drive (SeeOptical drives).

Network interfaces	• 2x Integrated 1 GbE RJ-45 ports (no 10/100 Mb support)
	• Onboard LOM slot for two additional 1/10 Gb Ethernet ports:
	  ◦ 2x 1 GbE RJ-45 ports (no 10/100 Mb support)
	  ◦ 2x 10 GbE RJ-45 ports (no 10/100 Mb support)
	  ◦ 2x 10 GbE SFP+ ports (no 10/100 Mb support)
	• Optional Mezzanine LOM (ML2) slot for dual-port 10 GbE cards with SFP+ or RJ-45 connectors.
	• 1x RJ-45 10/100/1000 Mb Ethernet systems management port.

Attribute	Specification
I/O expansion slots	Up to six slots. Slot 4 is the fixed slots on the system planar, and the remaining slots depend on the riser cards installed. The slots are as follows: • Slot 1: PCIe 3.0 x16 or PCIe 3.0 x8; full-height, half-length (PCIe x16 slot is double-wide) • Slot 2: PCIe 3.0 x8; full-height, half-length (not present if the slot 1 is PCIe x16) • Slot 3: PCIe 3.0 x8 or ML2 x8; full-height, half-length • Slot 4: PCIe 3.0 x8; low profile (vertical slot on system planar) • Slot 5: PCIe 3.0 x16; full-height, half-length • Slot 6: PCIe 3.0 x8; full-height, half-length Slot 5 requires the second processor to be installed.
Ports	• Front: 1x USB 2.0 port with XClarity Controller access and 1x USB 3.0 port; optional 1x VGA port. • Rear: 2x USB 3.0 ports and 1x VGA port; optional 1x DB-9 serial port.
Cooling	Three (one processor) or four (two processors) non-hot-swap system fans with N+1 redundancy.
Power supply	Up to two redundant hot-swap 550 W or 750 W (100 - 240 V) High Efficiency Platinum or 750 W (200 - 240 V) High Efficiency Titanium AC power supplies. HVDC support (PRC only).
Video	Matrox G200 with 16 MB memory integrated into the XClarity Controller. Maximum resolution is 1920x1200 at 60 Hz with 32 bits per pixel.
Hot-swap parts	Drives (select models) and power supplies.
Systems management	XClarity Controller (XCC) Standard, Advanced, or Enterprise (Pilot 4 chip), proactive platform alerts, XClarity Provisioning Manager, XClarity Essentials, XClarity Administrator, XClarity Integrators for VMware vCenter and Microsoft System Center, XClarity Energy Manager, Capacity Planner.
Security features	Power-on password, administrator's password, secure firmware updates, Trusted Platform Module (TPM) 1.2 or 2.0 (configurable UEFI setting). Optional lockable front bezel. Optional Trusted Cryptographic Module (TCM) or Nationz TPM (available only in PRC). Optional Lenovo Business Vantage security software (available only in PRC).
Operating systems	Microsoft Windows Server, Red Hat Enterprise Linux, SUSE Linux Enterprise Server, VMware ESXi. See the Operating systems section for specifics.
Warranty	One-year (7X03) or three-year (7X04) customer-replaceable unit (CRU) and onsite limited warranty with 9x5 Next Business Day Parts Delivered.
Service and support	Optional service upgrades are available through Lenovo Services: 2-hour or 4-hour response time, 6-hour or 24-hour committed service repair (select areas), warranty extension up to 5 years, 1-year or 2-year post-warranty extensions, YourDrive Your Data, Enterprise Software Support, and Basic Hardware Installation Services.
Dimensions	Width: 445 mm (17.5 in.), height: 87 mm (3.4 in.), depth: 764 mm (30.1 in.). See Physical specifications for details.
Weight	Minimum configuration: 19 kg (41.9 lb), maximum: 26 kg (57.3 lb)

Models

ThinkSystem SR550 models can be configured by using the Lenovo Data Center Solution Configurator (DCSC).

Configure-to-order (CTO) models are used to create models with factory-integrated server customizations. For CTO models, two base CTO models are available for the SR550 as listed in the following table, CTO1WW and CTOLWW:

- The CTO1WW base CTO model is for general business and is selectable by choosing **General Purpose** mode in DCSC.
- The CTOLWW base model is intended for High Performance Computing (HPC) and Artificial Intelligence (AI) configurations and solutions, including configurations for Lenovo Scalable Infrastructure (LeSI), and is enabled using either the **HPC & AI LeSI Solutions** mode or **HPC & AI Hardware** mode in DCSC. CTOLWW configurations can also be built using System x and Cluster Solutions Configurator (x-config).

Preconfigured server models may also be available for the SR550, however these are region-specific; that is, each region may define their own server models, and not all server models are available in every region.

The following table lists the base CTO models of the ThinkSystem SR550 server.

Table 2. Base CTO models

Machine Type/Model General purpose	Machine Type/Model for HPC and AI	Description
7X04CTO1WW	7X04CTOLWW	ThinkSystem SR550 – 3-year Warranty
7X03CTO1WW	7X03CTOLWW	ThinkSystem SR550 – 1-year Warranty

The following table lists the base chassis for CTO models of the SR550 server.

Table 3. Base chassis for CTO models

Feature code	Description
AV0Q	ThinkSystem SR550 3.5" Chassis with 8 or 12 bays
BMNF	ThinkSystem SR550 2.5" Chassis with 8 or 16 Bays v2
AV0R	ThinkSystem SR550 2.5" Chassis with 8 or 16 bays

Withdrawn models with 1st Gen processors: For the preconfigured models with 1st Gen processors that are now withdrawn, see the following Gen 1 product guide:
https://lenovopress.com/lp0640-thinksystem-sr550-server-xeon-sp-gen-1

The following tables list the available models, grouped by region.

- Models for Australia and New Zealand
- Models for South East Asian countries (ASEAN)
- Models for Hong Kong, Taiwan, Korea (HTK)
- Models for India

Refer to the Specifications section for information about standard features of the server.

Common to all models:

- All models indicated as having the 750W power supply are using the Platinum power supply

Models for Australia and New Zealand

Table 4. Models for Australia and New Zealand

Model	Intel Xeon processor†	Memory	RAID	Drive bays and drives	LOM	Slots	Power supply	Front VGA	XCC	Rail kit
Standard models with a 3-year warranty (machine type 7X04)										
7X04A07BAU	1x Bronze 3204 6C 85W 1.9G	1x 8GB 2933	530-8i	8x 2.5" SAS/16, Open bay	Open	4x PCIe x8	1x 750W	Yes	Std	Opt
7X04A07WAU	1x Bronze 3204 6C 85W 1.9G	1x 16GB 2Rx8 2933	530-8i	8x 2.5" SAS/16, Open bay	Open	1x PCIe x8	1x 750W	Yes	Ent	Slide CMA
7X04A07XAU	1x Silver 4208 8C 85W 2.1G	1x 16GB 2Rx8 2933	530-8i	8x 2.5" SAS/16, Open bay	Open	1x PCIe x8	1x 750W	Yes	Ent	Slide CMA
7X04A07ZAU	1x Silver 4208 8C 85W 2.1G	1x 16GB 2Rx8 2933	930-8i	8x 2.5" SAS/16, Open bay	Open	1x PCIe x8	1x 750W	Yes	Ent	Slide CMA
7X04A07YAU	1x Silver 4210 10C 85W 2.2G	1x 16GB 2Rx8 2933	930-8i	8x 2.5" SAS/16, Open bay	Open	1x PCIe x8	1x 750W	Yes	Ent	Slide CMA
7X04A080AU	1x Silver 4210 10C 85W 2.2G	1x 16GB 2Rx8 2933	530-8i	8x 2.5" SAS/16, Open bay	Open	1x PCIe x8	1x 750W	Yes	Ent	Slide CMA
7X04A081AU	1x Silver 4210 10C 85W 2.2G	1x 32GB 2933	530-8i	8x 2.5" SAS/16, Open bay	Open	1x PCIe x8	1x 750W	Yes	Ent	Slide CMA
7X04A082AU	1x Silver 4210 10C 85W 2.2G	1x 32GB 2933	930-8i	8x 2.5" SAS/16, Open bay	Open	1x PCIe x8	1x 750W	Yes	Ent	Slide CMA
TopSeller models with a 3-year warranty (machine type 7X04)										
7X04A0CRAU	1x Silver 4208 8C 85W 2.1G	1x 16GB 2Rx8 2933	9350-8i	8x 2.5" SAS/16, Open bay	Open	x16 FH+ x8 FH+ x8 LP	1x 750W	Yes	Ent	Slide CMA
7X04A0CNAU	1x Silver 4210 10C 85W 2.2G	1x 32GB 2933	Option	Option 2.5", Open bay	Open	x16 FH+ x8 FH+ x8 LP	1x 750W	Yes	Ent	Slide CMA
7X04A0CQAU	1x Silver 4210 10C 85W 2.2G	1x 32GB 2933	9350-8i	8x 2.5" SAS/16, Open bay	Open	x16 FH+ x8 FH+ x8 LP	1x 750W	Yes	Ent	Slide CMA
7X04A0BYAU	1x Silver 4216 16C 100W 2.1G	1x 32GB 2933	930-8i	8x 2.5" SAS/16, Open bay	Open	1x PCIe x8	1x 750W	Yes	Ent	Slide
7X04A0CLAU	1x Silver 4216 16C 100W 2.1G	1x 32GB 2933	Option	Option 2.5", Open bay	Open	x16 FH+ x8 FH+ x8 LP	1x 750W	Yes	Ent	Slide CMA
7X04A0CPAU	1x Silver 4216 16C 100W 2.1G	1x 32GB 2933	9350-8i	8x 2.5" SAS/16, Open bay	Open	x16 FH+ x8 FH+ x8 LP	1x 750W	Yes	Ent	Slide CMA

† Processor description: Processor model, number of cores, thermal design power (TDP), core frequency

Models for South East Asian countries (ASEAN)

Table 5. Models for South East Asian countries (ASEAN)

Model	Intel Xeon processor†	Memory	RAID	Drive bays and drives	LOM	Slots	Power supply	Front VGA	XCC	Rail kit
Standard models with a 3-year warranty (machine type 7X04)										
7X04A07BSG	1x Bronze 3204 6C 85W 1.9G	1x 8GB 2933	530-8i	8x 2.5" SAS/16, Open bay	Open	4x PCIe x8	1x 750W	Yes	Std	Opt
7X04A09XSG	1x Bronze 3204 6C 85W 1.9G	1x 8GB 2933	530-8i	8x 2.5" SAS/16, Open bay	Open	4x PCIe x8	1x 750W	Yes	Std	Opt

Model	Intel Xeon processor†	Memory	RAID	Drive bays and drives	LOM	Slots	Power supply	Front VGA	XCC	Rail kit
7X04A09NSG	1x Silver 4208 8C 85W 2.1G	1x 8GB 2933	530-8i	8x 2.5" SAS/16, Open bay	Open	4x PCIe x8	1x 750W	Yes	Std	Opt
7X04A0A6SG	1x Silver 4210 10C 85W 2.2G	1x 8GB 2933	530-8i	8x 2.5" SAS/16, Open bay	Open	4x PCIe x8	1x 750W	Yes	Std	Opt
7X04A09LSG	1x Silver 4214 12C 85W 2.2G	1x 8GB 2933	530-8i	8x 2.5" SAS/16, Open bay	Open	4x PCIe x8	1x 750W	Yes	Std	Opt
7X04A09DSG	1x Silver 4215 8C 85W 2.5G	1x 8GB 2933	530-8i	8x 2.5" SAS/16, Open bay	Open	4x PCIe x8	1x 750W	Yes	Std	Opt
7X04A09YSG	1x Silver 4216 16C 100W 2.1G	1x 8GB 2933	530-8i	8x 2.5" SAS/16, Open bay	Open	4x PCIe x8	1x 750W	Yes	Std	Opt
7X04A09BSG	1x Gold 5215 10C 85W 2.5G	1x 8GB 2933	530-8i	8x 2.5" SAS/16, Open bay	Open	4x PCIe x8	1x 750W	Yes	Std	Opt
7X04A0A3SG	1x Gold 5217 8C 115W 3.0G	1x 8GB 2933	530-8i	8x 2.5" SAS/16, Open bay	Open	4x PCIe x8	1x 750W	Yes	Std	Opt
7X04A09RSG	1x Gold 5218 16C 125W 2.3G	1x 8GB 2933	530-8i	8x 2.5" SAS/16, Open bay	Open	4x PCIe x8	1x 750W	Yes	Std	Opt
7X04A097SG	1x Gold 5220 18C 125W 2.2G	1x 8GB 2933	530-8i	8x 2.5" SAS/16, Open bay	Open	4x PCIe x8	1x 750W	Yes	Std	Opt

† Processor description: Processor model, number of cores, thermal design power (TDP), core frequency

Models for Hong Kong, Taiwan, Korea (HTK)

Table 8. Models for Hong Kong, Taiwan, Korea (HTK)

Model	Intel Xeon processor†	Memory	RAID	Drive bays and drives	LOM	Slots	Power supply	Front VGA	XCC	Rail kit
Standard models with a 3-year warranty (machine type 7X04)										
7X04A0AKCN	1x Bronze 3204 6C 85W 1.9G	1x 8GB 2933	530-8i	8x 2.5" SAS/16, Open bay	Open	4x PCIe x8	1x 750W	Yes	Std	Opt
7X04A0AMCN	1x Silver 4208 8C 85W 2.1G	1x 8GB 2933	530-8i	8x 2.5" SAS/16, Open bay	Open	4x PCIe x8	1x 750W	Yes	Std	Opt
7X04A0APCN	1x Silver 4210 10C 85W 2.2G	1x 8GB 2933	530-8i	8x 2.5" SAS/16, Open bay	Open	4x PCIe x8	1x 750W	Yes	Std	Opt
7X04A0ARCN	1x Silver 4214 12C 85W 2.2G	1x 8GB 2933	530-8i	8x 2.5" SAS/16, Open bay	Open	4x PCIe x8	1x 750W	Yes	Std	Opt
7X04A0AZCN	1x Silver 4215 8C 85W 2.5G	1x 8GB 2933	530-8i	8x 2.5" SAS/16, Open bay	Open	4x PCIe x8	1x 750W	Yes	Std	Opt
7X04A0ATCN	1x Silver 4216 16C 100W 2.1G	1x 8GB 2933	530-8i	8x 2.5" SAS/16, Open bay	Open	4x PCIe x8	1x 750W	Yes	Std	Opt
7X04A0AVCN	1x Gold 5215 10C 85W 2.5G	1x 8GB 2933	530-8i	8x 2.5" SAS/16, Open bay	Open	4x PCIe x8	1x 750W	Yes	Std	Opt
7X04A0AXCN	1x Gold 5217 8C 115W 3.0G	1x 8GB 2933	530-8i	8x 2.5" SAS/16, Open bay	Open	4x PCIe x8	1x 750W	Yes	Std	Opt
7X04A0B1CN	1x Gold 5218 16C 125W 2.3G	1x 8GB 2933	530-8i	8x 2.5" SAS/16, Open bay	Open	4x PCIe x8	1x 750W	Yes	Std	Opt
7X04A0B3CN	1x Gold 5220 18C 125W 2.2G	1x 8GB 2933	530-8i	8x 2.5" SAS/16, Open bay	Open	4x PCIe x8	1x 750W	Yes	Std	Opt

† Processor description: Processor model, number of cores, thermal design power (TDP), core frequency

Models for India

Table 9. Models for India

Model	Intel Xeon processor†	Memory	RAID	Drive bays and drives	LOM	Slots	Power supply	Front VGA	XCC	Rail kit
Standard models with a 3-year warranty (machine type 7X04)										
7X04A07ASG	1x Bronze 3204 6C 85W 1.9G	1x 8GB 2933	530-8i	8x 2.5" SAS/16, Open bay	Open	4x PCIe x8	1x 750W	Yes	Std	Opt
7X04A09SSG	1x Bronze 3204 6C 85W 1.9G	1x 8GB 2933	530-8i	8x 2.5" SAS/16, Open bay	Open	4x PCIe x8	1x 750W	Yes	Std	Opt
7X04A0A7SG	1x Silver 4208 8C 85W 2.1G	1x 8GB 2933	530-8i	8x 2.5" SAS/16, Open bay	Open	4x PCIe x8	1x 750W	Yes	Std	Opt
7X04A09MSG	1x Silver 4210 10C 85W 2.2G	1x 8GB 2933	530-8i	8x 2.5" SAS/16, Open bay	Open	4x PCIe x8	1x 750W	Yes	Std	Opt
7X04A09JSG	1x Silver 4214 12C 85W 2.2G	1x 8GB 2933	530-8i	8x 2.5" SAS/16, Open bay	Open	4x PCIe x8	1x 750W	Yes	Std	Opt
7X04A09ASG	1x Silver 4215 8C 85W 2.5G	1x 8GB 2933	530-8i	8x 2.5" SAS/16, Open bay	Open	4x PCIe x8	1x 750W	Yes	Std	Opt
7X04A0A5SG	1x Silver 4216 16C 100W 2.1G	1x 8GB 2933	530-8i	8x 2.5" SAS/16, Open bay	Open	4x PCIe x8	1x 750W	Yes	Std	Opt
7X04A09GSG	1x Gold 5215 10C 85W 2.5G	1x 8GB 2933	530-8i	8x 2.5" SAS/16, Open bay	Open	4x PCIe x8	1x 750W	Yes	Std	Opt
7X04A09ESG	1x Gold 5217 8C 115W 3.0G	1x 8GB 2933	530-8i	8x 2.5" SAS/16, Open bay	Open	4x PCIe x8	1x 750W	Yes	Std	Opt
7X04A09HSG	1x Gold 5218 16C 125W 2.3G	1x 8GB 2933	530-8i	8x 2.5" SAS/16, Open bay	Open	4x PCIe x8	1x 750W	Yes	Std	Opt
7X04A0A0SG	1x Gold 5220 18C 125W 2.2G	1x 8GB 2933	530-8i	8x 2.5" SAS/16, Open bay	Open	4x PCIe x8	1x 750W	Yes	Std	Opt

† Processor description: Processor model, number of cores, thermal design power (TDP), core frequency

Processors

The SR550 server supports one or two Intel Xeon Bronze, Silver, Gold, or Platinum processors of up to 125 W TDP. The following table lists the specifications of the processors for the SR550 server.

Topics in this section:

- Continued support for 1st Gen Intel Xeon Scalable processors
- UEFI operating modes

Processor support: Both 1st Gen and 2nd Gen Intel Xeon SP processors are supported. For supported 1st Gen processors, see the Continued support for 1st Gen Intel Xeon Scalable processors section.

Processor specifications table abbreviations:

- UPI: Ultra Path Interconnect
- TDP: Thermal Design Power
- HT: Hyper-Threading
- TB: Turbo Boost 2.0
- VT-x: Virtualization Technology
- VT-d: Virtualization Technology for Directed I/O
- SST-PP: Speed Select Technology - Performance Profile
- FMA: Fused-Multiply Add (AVX-512)
- RAS: Reliability, Availability, and Serviceability
    - Std: Standard RAS
    - Adv: Advanced RAS

Table 13. Processor specifications

CPU model	Cores / threads	Core speed (Base / TB Max)	Cache	Max DDR4 speed	Max memory capacity per socket	UPI speed	TDP	HT	TB	VT-x	VT-d	SST-PP	FMA units	RAS
Intel Xeon Bronze processors														
3204	6 / 6	1.9 / 1.9 GHz	8.25 MB	2133 MHz	1 TB	9.6 GT/s	85 W	N	N	Y	Y	N	1	Std
3206R	8 / 8	1.9 / 1.9 GHz	11 MB	2133 MHz	1 TB	9.6 GT/s	85 W	N	N	Y	Y	N	1	Std
Intel Xeon Silver processors														
4208	8 / 16	2.1 / 3.2 GHz	11 MB	2400 MHz	1 TB	9.6 GT/s	85 W	Y	Y	Y	Y	N	1	Std
4209T	8 / 16	2.2 / 3.2 GHz	11 MB	2400 MHz	1 TB	9.6 GT/s	70 W	Y	Y	Y	Y	N	1	Std
4210	10 / 20	2.2 / 3.2 GHz	13.75 MB	2400 MHz	1 TB	9.6 GT/s	85 W	Y	Y	Y	Y	N	1	Std
4210R	10 / 20	2.4 / 3.2 GHz	13.75 MB	2400 MHz	1 TB	9.6 GT/s	100 W	Y	Y	Y	Y	N	1	Std
4214	12 / 24	2.2 / 3.2 GHz	16.5 MB	2400 MHz	1 TB	9.6 GT/s	85 W	Y	Y	Y	Y	N	1	Std
4214R	12 / 24	2.4 / 3.5 GHz	16.5 MB	2400 MHz	1 TB	9.6 GT/s	100 W	Y	Y	Y	Y	N	1	Std
4214Y	12 / 24	2.2 / 3.2 GHz	16.5 MB	2400 MHz	1 TB	9.6 GT/s	85 W	Y	Y	Y	Y	Y	1	Std
	10 / 20	2.3 / 3.2 GHz												
	8 / 16	2.4 / 3.2 GHz												
4215	8 / 16	2.5 / 3.5 GHz	11 MB	2400 MHz	1 TB	9.6 GT/s	85 W	Y	Y	Y	Y	N	1	Std
4216	16 / 32	2.1 / 3.2 GHz	22 MB	2400 MHz	1 TB	9.6 GT/s	100 W	Y	Y	Y	Y	N	1	Std
Intel Xeon Gold processors														
5215	10 / 20	2.5 / 3.4 GHz	13.75 MB	2666 MHz	1 TB	10.4 GT/s	85 W	Y	Y	Y	Y	N	1	Adv
5215M	10 / 20	2.5 / 3.4 GHz	13.75 MB	2666 MHz	2 TB	10.4 GT/s	85 W	Y	Y	Y	Y	N	1	Adv
5215L	10 / 20	2.5 / 3.4 GHz	13.75 MB	2666 MHz	4.5 TB	10.4 GT/s	85 W	Y	Y	Y	Y	N	1	Adv
5217	8 / 16	3.0 / 3.7 GHz	11 MB	2666 MHz	1 TB	10.4 GT/s	115 W	Y	Y	Y	Y	N	1	Adv
5218	16 / 32	2.3 / 3.9 GHz	22 MB	2666 MHz	1 TB	10.4 GT/s	125 W	Y	Y	Y	Y	N	1	Adv
5218B	16 / 32	2.3 / 3.9 GHz	22 MB	2666 MHz	1 TB	10.4 GT/s	125 W	Y	Y	Y	Y	N	1	Adv
5218R	20 / 40	2.1 / 4.0 GHz	27.5 MB	2666 MHz	1 TB	10.4 GT/s	125 W	Y	Y	Y	Y	N	1	Adv
5218T	16 / 32	2.1 / 3.8 GHz	22 MB	2667 MHz	1 TB	10.4 GT/s	105 W	Y	Y	Y	Y	N	1	Adv
5220	18 / 36	2.2 / 3.9 GHz	24.75 MB	2666 MHz	1 TB	10.4 GT/s	125 W	Y	Y	Y	Y	N	1	Adv
5220S	18 / 36	2.7 / 3.9 GHz	24.75 MB	2667 MHz	1 TB	10.4 GT/s	125 W	Y	Y	Y	Y	N	1	Adv
5220T	18 / 36	1.9 / 3.9 GHz	24.75 MB	2667 MHz	1 TB	10.4 GT/s	105 W	Y	Y	Y	Y	N	1	Adv
5222	4 / 8	3.8 / 3.9 GHz	16.5 MB	2933 MHz	1 TB	10.4 GT/s	105 W	Y	Y	Y	Y	N	2	Adv
6209U	20 / 40	2.1 / 3.9 GHz	27.5 MB	2933 MHz	1 TB	N/A	125 W	Y	Y	Y	Y	N	2	Adv
6222V	20 / 40	1.8 / 3.6 GHz	27.5 MB	2400 MHz	1 TB	10.4 GT/s	115 W	Y	Y	Y	Y	N	2	Adv
6226	12 / 24	2.7 / 3.7 GHz	19.25 MB	2933 MHz	1 TB	10.4 GT/s	125 W	Y	Y	Y	Y	N	2	Adv

CPU model	Cores / threads	Core speed (Base / TB Max)	Cache	Max DDR4 speed	Max memory capacity per socket	UPI speed	TDP	HT	TB	VT-x	VT-d	SST-PP	FMA units	RAS
6230	20 / 40	2.1 / 3.9 GHz	27.5 MB	2933 MHz	1 TB	10.4 GT/s	125 W	Y	Y	Y	Y	N	2	Adv
6230N	20 / 40	2.3 / 3.9 GHz	27.5 MB	2933 MHz	1 TB	10.4 GT/s	125 W	Y	Y	Y	Y	N	2	Adv
6230T	20 / 40	2.1 / 3.9 GHz	27.5 MB	2933 MHz	1 TB	10.4 GT/s	125 W	Y	Y	Y	Y	N	2	Adv
6238T	22 / 44	1.9 / 3.7 GHz	30.25 MB	2933 MHz	1 TB	10.4 GT/s	125 W	Y	Y	Y	Y	N	2	Adv
Intel Xeon Platinum processors														
8253	16 / 32	2.2 / 3.0 GHz	22 MB	2933 MHz	1 TB	10.4 GT/s	125 W	Y	Y	Y	Y	N	2	Adv
8256	4 / 8	3.8 / 3.9 GHz	16.5 MB	2933 MHz	1 TB	10.4 GT/s	105 W	Y	Y	Y	Y	N	2	Adv

Configuration notes:

- The Intel Xeon Gold 5218 and 5218B processors have similar specifications; however, they use different silicon designs and cannot be mixed in the same system.
- The processors that support SST-PP offer three distinct operating points that are defined by a core count with a base speed associated with that core count. The operating point is static, it is selected during the boot process and cannot be changed at runtime.

For the SR550 server models that come standard with one processor, the second processor can be ordered, if required (see the following table for ordering information). The second processor must be of the same model as the first processor. The second processor option includes a processor and a heatsink; an additional system fan is not included and needs to be purchased with the second processor (see Cooling for details).

Table 14. Processor options

Part number	Feature code*	Description
Intel Xeon Bronze processors		
4XG7A37938	B4HU	SR550/SR590/SR650 Intel Xeon Bronze 3204 6C 85W 1.9GHz Processor w/o FAN
4XG7A37983	B7N3	SR550/SR590/SR650 Intel Xeon Bronze 3206R 8C 85W 1.9GHz Processor w/o FAN
Intel Xeon Silver processors		
4XG7A37935	B4HT	SR550/SR590/SR650 Intel Xeon Silver 4208 8C 85W 2.1GHz Processor w/o FAN
4XG7A37944	B4P4	SR550/SR590/SR650 Intel Xeon Silver 4209T 8C 70W 2.2GHz Processor w/o FAN
4XG7A37932	B4HS	SR550/SR590/SR650 Intel Xeon Silver 4210 10C 85W 2.2GHz Processor w/o FAN
4XG7A37981	B7N5	SR550/SR590/SR650 Intel Xeon Silver 4210R 10C 100W 2.4GHz Processor w/o FAN
4XG7A37929	B4HR	SR550/SR590/SR650 Intel Xeon Silver 4214 12C 85W 2.2GHz Processor w/o FAN
4XG7A37980	B7N6	SR550/SR590/SR650 Intel Xeon Silver 4214R 12C 100W 2.4GHz Processor w/o FAN
4XG7A37941	B4NW	SR550/SR590/SR650 Intel Xeon Silver 4214Y 12/10/8C 85W 2.2GHz Processor w/o FAN
4XG7A37926	B4HQ	SR550/SR590/SR650 Intel Xeon Silver 4215 8C 85W 2.5GHz Processor w/o FAN
4XG7A37923	B4HP	SR550/SR590/SR650 Intel Xeon Silver 4216 16C 100W 2.1GHz Processor w/o FAN
Intel Xeon Gold processors		
4XG7A37916	B4HN	SR550/SR590/SR650 Intel Xeon Gold 5215 10C 85W 2.5GHz Processor w/o FAN
4XG7A37913	B4P1	SR550/SR590/SR650 Intel Xeon Gold 5215M 10C 85W 2.5GHz Processor w/o FAN
4XG7A37910	B4P9	SR550/SR590/SR650 Intel Xeon Gold 5215L 10C 85W 2.5GHz Processor w/o FAN

Part number	Feature code*	Description
4XG7A37919	B4HM	SR550/SR590/SR650 Intel Xeon Gold 5217 8C 115W 3.0GHz Processor w/o FAN
4XG7A37895	B4HL	SR550/SR590/SR650 Intel Xeon Gold 5218 16C 125W 2.3GHz Processor w/o FAN
4XG7A37958	B6BS	SR550/SR590/SR650 Intel Xeon Gold 5218B 16C 125W 2.3GHz Processor w/o FAN
4XG7A63272	BAZS	SR550/SR590/SR650 Intel Xeon Gold 5218R 20C 125W 2.1GHz Processor w/o FAN
4XG7A37955	B5S0	SR550/SR590/SR650 Intel Xeon Gold 5218T 16C 105W 2.1GHz Processor w/o FAN
4XG7A37892	B4HK	SR550/SR590/SR650 Intel Xeon Gold 5220 18C 125W 2.2GHz Processor w/o FAN
4XG7A38019	B6CW	SR550/SR590/SR650 Intel Xeon Gold 5220S 18C 125W 2.7GHz Processor w/o FAN
4XG7A38005	B6CQ	SR550/SR590/SR650 Intel Xeon Gold 5220T 18C 105W 1.9GHz Processor w/o FAN
4XG7A37951	B5S1	SR550/SR590/SR650 Intel Xeon Gold 5222 4C 105W 3.8GHz Processor w/o FAN
None**	B6CX	Intel Xeon Gold 6209U 20C 125W 2.1GHz Processor w/o FAN
4XG7A38023	B6CV	SR550/SR590/SR650 Intel Xeon Gold 6222V 20C 115W 1.8GHz Processor w/o FAN
4XG7A38021	B6CL	SR550/SR590/SR650 Intel Xeon Gold 6226 12C 125W 2.7GHz Processor w/o FAN
4XG7A37889	B4HJ	SR550/SR590/SR650 Intel Xeon Gold 6230 20C 125W 2.1GHz Processor w/o FAN
4XG7A38028	B5RY	SR550/SR590/SR650 Intel Xeon Gold 6230N 20C 125W 2.3GHz Processor w/o FAN
4XG7A38006	B6CP	SR550/SR590/SR650 Intel Xeon Gold 6230T 20C 125W 2.1GHz Processor w/o FAN
4XG7A37906	B4P2	SR550/SR590/SR650 Intel Xeon Gold 6238T 22C 125W 1.9GHz Processor w/o FAN
Intel Xeon Platinum processors		
4XG7A37898	B5RZ	SR550/SR590/SR650 Intel Xeon Platinum 8253 16C 125W 2.2GHz Processor w/o FAN
4XG7A37947	B5S2	SR550/SR590/SR650 Intel Xeon Platinum 8256 4C 105W 3.8GHz Processor w/o FAN

* For CTO configurations, the feature code represents a processor, and fans and heatsinks are derived by the configuration tool.
** Factory-installed only; no field upgrade. Supported in the uniprocessor configurations only.

Configuration note: Gold 6230 processors are *not* supported in the configurations with 12x 3.5-inch drive bays.

Continued support for 1st Gen Intel Xeon Scalable processors

The SR550 also continues to support the 1st Gen Intel Xeon Scalable processors (formerly codenamed "Skylake") listed in the following table.

Table 15. Long-life 1st Gen Intel Xeon Scalable processors

Part number	Feature code	Description

* Only available as a field upgrade for existing customers. Not available in CTO (configure to order) configurations.

For specifications of these processors, see the Intel Xeon Scalable Processor Reference for Lenovo ThinkSystem Servers:
https://lenovopress.com/lp1262-intel-xeon-sp-processor-reference#term=SKL

UEFI operating modes

The SR550 offers preset operating modes that affect energy consumption and performance. These modes are a collection of predefined low-level UEFI settings that simplify the task of tuning the server to suit your business and workload requirements.

The following table lists the feature codes that allow you to specify the mode you wish to preset in the factory for CTO orders.

Table 16. UEFI operating mode presets in DCSC

Feature code	Description
BFYB	Operating mode selection for: "Maximum Performance Mode"
BFYC	Operating mode selection for: "Minimal Power Mode"
BFYD	Operating mode selection for: "Efficiency Favoring Power Savings Mode"
BFYE	Operating mode selection for: "Efficiency - Favoring Performance Mode"

The preset modes for the SR550 are as follows:

- **Maximum Performance Mode** (feature BFYB): Achieves maximum performance but with higher power consumption and lower energy efficiency.
- **Minimal Power Mode** (feature BFYC): Minimize the absolute power consumption of the system.
- **Efficiency Favoring Power Savings Mode** (feature BFYD): Maximize the performance/watt efficiency with a bias towards power savings. This is the favored mode for SPECpower benchmark testing, for example.
- **Efficiency Favoring Performance Mode** (feature BFYE): Maximize the performance/watt efficiency with a bias towards performance. This is the favored mode for Energy Star certification, for example.

For details about these preset modes, and all other performance and power efficiency UEFI settings offered in the SR550, see the paper "Tuning UEFI Settings for Performance and Energy Efficiency on Intel Xeon Scalable Processor-Based ThinkSystem Servers", available from https://lenovopress.lenovo.com/lp1477.

Memory

The SR550 server supports up to 6 TruDDR4 memory RDIMMs when one processor is installed and up to 12 RDIMMs when two processors are installed for a total of up to 768 GB of memory capacity (up to 384 GB per processor). Each processor has six memory channels, and there is a one DIMM per channel.

Lenovo TruDDR4 memory uses the highest-quality components sourced from Tier 1 DRAM suppliers and only memory that meets strict requirements is selected. It is compatibility tested and tuned on every ThinkSystem server to maximize performance and reliability.

TruDDR4 memory has a unique signature programmed into the DIMM, which enables Lenovo servers to verify whether the memory installed is qualified and supported. Lenovo qualified and supported TruDDR4 memory is covered by Lenovo warranty, and service and support provided worldwide.

The following memory protection technologies are supported by the processor's integrated memory controllers:

- ECC
- SDDC (for x4-based memory DIMMs)
- ADDDC (for x4-based memory DIMMs; Gold and Platinum processors only)
- Memory mirroring
- Memory rank sparing
- Patrol scrubbing
- Demand scrubbing

The following table lists memory options available for the SR550 server. The table also indicates which processor generation is supported for each memory option.

Table 17. Memory options

Part number	Feature code	Description	Maximum quantity*	Gen 1 CPU	Gen 2 CPU
RDIMMs - 2933 MHz					
4ZC7A08706	B4H1	ThinkSystem 8GB TruDDR4 2933MHz (1Rx8 1.2V) RDIMM	6 / 12	No	Yes
4ZC7A08707	B4LY	ThinkSystem 16GB TruDDR4 2933MHz (1Rx4 1.2V) RDIMM	6 / 12	No	Yes
4ZC7A08708	B4H2	ThinkSystem 16GB TruDDR4 2933MHz (2Rx8 1.2V) RDIMM	6 / 12	No	Yes
4ZC7A08709	B4H3	ThinkSystem 32GB TruDDR4 2933MHz (2Rx4 1.2V) RDIMM	6 / 12	No	Yes
4ZC7A08710	B4H4	ThinkSystem 64GB TruDDR4 2933MHz (2Rx4 1.2V) RDIMM	6 / 12	No	Yes
RDIMMs - 2666 MHz					
7X77A01301	AUU1	ThinkSystem 8GB TruDDR4 2666 MHz (1Rx8 1.2V) RDIMM	6 / 12	Yes	No
7X77A01303	AUNC	ThinkSystem 16GB TruDDR4 2666 MHz (2Rx8 1.2V) RDIMM	6 / 12	Yes	Yes
7X77A01304	AUND	ThinkSystem 32GB TruDDR4 2666 MHz (2Rx4 1.2V) RDIMM	6 / 12	Yes	Yes

* The maximum quantity shown is with one processor / two processors.

Configuration notes:

- All RDIMMs in the server operate at the same speed, which is determined as the lowest value of:
  - RDIMM rated speed (2666 MHz or 2933 MHz).
  - Memory speed supported by the specific processor (2133 MHz, 2400 MHz, 2666 MHz, or 2933 MHz).

  Note: Maximum memory speed can be achieved when Max performance mode is enabled in UEFI.
- Mixing RDIMMs of different ranks (single- or dual-rank), DRAM chip types (x4 or x8), speeds (2666 MHz or 2933 MHz), and capacities (8 GB, 16 GB, 32 GB, or 64 GB) is supported in the independent channel mode (the default operational mode).
- For server configurations with memory protection, the following rules apply:
  - Single Device Data Correction (SDDC) works only in the independent channel mode and supports only x4-based memory DIMMs.
  - Adaptive Double Device Data Correction (ADDDC) works with x4-based memory DIMMs and requires two DIMM ranks per channel, Intel Xeon Gold or Platinum processors, and the Closed Page memory access mode.
  - If memory mirroring is used, then DIMMs must be installed in quantities of 2 or 4 per processor for mirroring across two memory channels, or in quantities of 3 or 6 per processor for mirroring across three memory channels. Mixing two- and three-channel mirroring in the server is allowed (one processor uses two-channel mirroring, and another processor uses three-channel mirroring). All DIMMs in the server must be identical in type and size.
  - If memory rank sparing is used, then a minimum of two ranks must be installed per populated channel (a least one dual-rank or quad-rank DIMM; single-rank DIMMs are not supported). With rank sparing, one rank in each populated channel is reserved as spare memory for other ranks on the same channel. All DIMMs in the server must be identical in type and size.
  - SDDC, memory mirroring, and memory rank sparing modes are mutually exclusive. Only one operational memory mode can be enabled on the server.

Internal storage

The SR550 server supports the following internal drive bay configurations:

1. 8 LFF SATA Simple Swap drive bays
2. 8 LFF SAS/SATA hot-swap drive bays
3. 12 LFF SAS/SATA hot-swap drive bays
4. Up to 16 SFF hot-swap drive bays: 8x 2.5" SAS/SATA + 8x 2.5" SAS/SATA

In addition, the SR550 server models can be configured with one or two internal M.2 SATA SSDs. The server also supports configurations without drive bays.

The following figure shows the internal drive bay configurations.

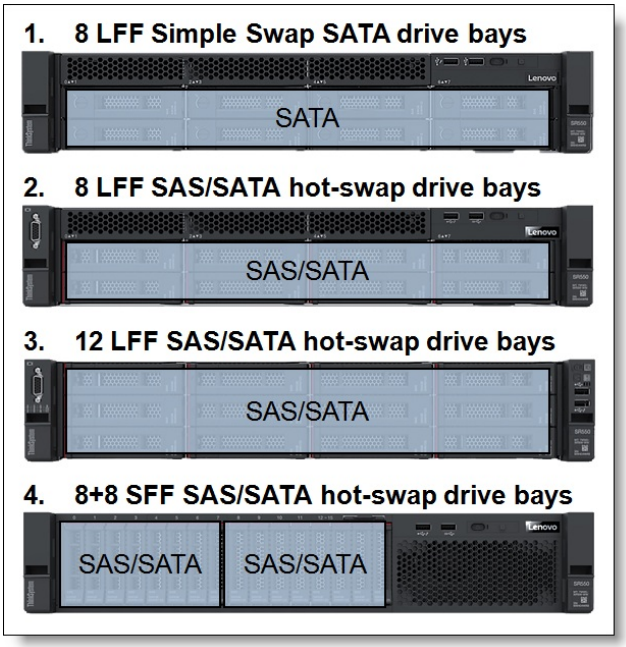

Figure 7. Internal drive bay configurations

In this section:

- Backplanes
- Supported drive bay combinations
- Field upgrades
- M.2 drives
- SED encryption key management with ISKLM

Backplanes

The following table lists the backplane choices for the server.

Table 18. Internal storage options

Part number	Feature code	Description	Maximum quantity
CTO only*	AUR6	ThinkSystem 2U 3.5" SATA/SAS 8-Bay Backplane	1
CTO only*	AUR9	ThinkSystem 2U 3.5" SATA/SAS 12-Bay Backplane	1
CTO only*	AURA	ThinkSystem 2U/Twr 2.5" SATA/SAS 8-Bay Backplane	2

* For field upgrades, see the Field upgrades section

Supported drive bay combinations

The following tables list supported internal storage configurations with the SAS/SATA backplanes.

Table 19. Internal drive bay configurations

Drive bay configuration	Backplane kit type and quantity			Storage controller type and quantity*
	2.5" SATA/SAS 8-Bay	3.5" SATA/SAS 8-Bay	3.5" SATA/SAS 12-Bay	
12x 3.5" chassis (Feature code AV0Q)				
8x 3.5-in. SATA Simple Swap	0	0	0	Onboard AHCI (non-RAID) / Intel RSTe (RAID) (8)
8x 3.5-in. SAS/SATA hot-swap	0	1	0	1x RAID 8i or HBA 8i (8)
12x 3.5-in. SAS/SATA hot-swap	0	0	1	1x RAID 16i or HBA 16i (12)
16x 2.5" chassis (Feature code AV0R)				
8x 2.5-in. SAS/SATA hot-swap	1	0	0	1x RAID 8i or HBA 8i (8)
				1x RAID 16i or HBA 16i (8)
16x 2.5-in. SAS/SATA hot-swap	2	0	0	1x RAID 16i or HBA 16i (16)
				2x RAID 8i or 2x HBA 16i (8+8)
				1x RAID 730-8i 2GB/930-8i (8) + 1x 430-8i HBA (8)

* The numbers in brackets (x or x+y) specify the quantity of drive bays connected to each of the controllers.

Field upgrades

The following table lists the backplane options that can be installed as field upgrades.

Use with X40 adapters: These backplane kits in the table below include SAS/SATA cables for use with the onboard SATA controller or with RAID 930, 730, 530 adapters and 430 HBAs (collectively called X30 adapters). If you are adding or upgrading to RAID 940 adapters or 440 HBAs (collectively called X40 adapters), you will need to *also* order an X40 cable kit. See the Cable kits for 440 HBAs and RAID 940 adapters section for details.

Table 20. Field upgrades

Part number	Description	Maximum quantity
3.5-inch drive backplane upgrade kits		
4XH7A08770	ThinkSystem SR550/SR590/SR650 3.5" SATA/SAS 8-Bay Backplane Upgrade Kit	1
4XH7A08771	ThinkSystem SR550/SR590/SR650 3.5" SATA/SAS 12-Bay Backplane Upgrade Kit	1
2.5-inch drive backplane upgrade kit		
7XH7A06254	ThinkSystem SR550/SR650 2.5" SATA/SAS 8-Bay Backplane Kit	2

Configuration notes:

- The 2.5" 8-drive backplane kit (7XH7A06254) adds 8x 2.5" SAS/SATA hot-swap drive bays to the previously configured models that support drive bay expansion capabilities.
- Models without any drive bays that are based on the 16x 2.5" chassis (feature code AV0R) support adding drive bays by using the 2.5" 8-drive backplane kit (7XH7A06254).
- Models without any drive bays that are based on the 12x 3.5" chassis (feature code AV0Q) include the Right EIA Latch with FIO (USB ports, status LEDs, and a power button). These models support adding drive bays by using the 3.5" 8-drive backplane kit (4XH7A08770) or 3.5" 12-drive backplane kit (4XH7A08771).
- The backplane upgrade kits include drive backplanes and required SAS cables, power cables, and drive bay fillers; storage controllers are not included.

Cable kits for 440 HBAs and RAID 940 adapters

The backplane kits listed in the preceding table include cables for use with the onboard SATA controller or with RAID 930, 730, 530 adapters and 430 HBAs (collectively called X30 adapters). If you wish to use the backplane kits with RAID 940 adapters or 440 HBAs (collectively called X40 adapters), then you will also need to order an additional X40 cable kit to use instead of the cables in the backplane kit.

Tip: When adding an X40 adapter, you will order both the backplane kit and the relevant X40 cable kit, however the SAS/SATA data cable(s) in the backplane kit will not be used.

Table 21. Cable kits for 440 HBAs and RAID 940 adapters

Backplane kits with X30 cables		**X40 cable kits also needed**	
3.5-inch drive backplane upgrade kits			
4XH7A08770	ThinkSystem SR550/SR590/SR650 3.5" SATA/SAS 8-Bay Backplane Upgrade Kit	4XH7A61098	ThinkSystem SR550 3.5" SATA/SAS 8-Bay X40 RAID Cable Kit
4XH7A08771	ThinkSystem SR550/SR590/SR650 3.5" SATA/SAS 12-Bay Backplane Upgrade Kit	4XH7A61099	ThinkSystem SR550 3.5" SATA/SAS 12-Bay X40 RAID Cable Kit
2.5-inch drive backplane upgrade kit			
7XH7A06254	ThinkSystem SR550/SR650 2.5" SATA/SAS 8-Bay Backplane Kit	4XH7A61097	ThinkSystem SR550 2.5" SATA/SAS 8-Bay X40 RAID Cable Kit

M.2 drives

The server supports one or two M.2 form-factor SATA drives for use as an operating system boot solution. With two M.2 drives configured, the drives are configured by default as a RAID-1 mirrored pair for redundancy.

The M.2 drives install into an M.2 adapter which in turn is installed in a dedicated slot on the system board. See the internal view of the server in the Components and connectors section for the location of the M.2 slot.

There are two M.2 adapters supported, as listed in the following table.

Table 22. M.2 components

Part number	Feature code	Description	Maximum supported
7Y37A01092	AUMU	ThinkSystem M.2 Enablement Kit (contains the Single M.2 Boot Adapter; supports 1 drive)	1
7Y37A01093	AUMV	ThinkSystem M.2 with Mirroring Enablement Kit (contains the Dual M.2 Boot Adapter, supports 1 or 2 drives)	1

Supported drives are listed in the Internal drive options section.

For details about M.2 components, see the *ThinkSystem M.2 Drives and M.2 Adapters* product guide: https://lenovopress.com/lp0769-thinksystem-m2-drives-adapters

SED encryption key management with ISKLM

The server supports self-encrypting drives (SEDs) as listed in the Internal drive options section. To effectively manage a large deployment of these drives in Lenovo servers, IBM Security Key Lifecycle Manager (SKLM) offers a centralized key management solution. A Lenovo Feature on Demand (FoD) upgrade is used to enable this SKLM support in the management processor of the server.

The following table lists the part numbers and feature codes for the upgrades.

Table 23. FoD upgrades for SKLM support

Part number	Feature code	Description
Security Key Lifecycle Manager - FoD (United States, Canada, Asia Pacific, and Japan)		
00D9998	A5U1	SKLM for System x/ThinkSystem w/SEDs - FoD per Install with 1 year S&S
00D9999	AS6C	SKLM for System x/ThinkSystem w/SEDs - FoD per Install with 3 year S&S
Security Key Lifecycle Manager - FoD (Latin America, Europe, Middle East, and Africa)		
00FP648	A5U1	SKLM for System x/ThinkSystem w/SEDs - FoD per Install with 1 year S&S
00FP649	AS6C	SKLM for System x/ThinkSystem w/SEDs - FoD per Install with 3 year S&S

The IBM Security Key Lifecycle Manager software is available from Lenovo using the ordering information listed in the following table.

Table 24. IBM Security Key Lifecycle Manager licenses

Part number	Description
7S0A007FWW	IBM Security Key Lifecycle Manager Basic Edition Install License + SW Subscription & Support 12 Months
7S0A007HWW	IBM Security Key Lifecycle Manager For Raw Decimal Terabyte Storage Resource Value Unit License + SW Subscription & Support 12 Months
7S0A007KWW	IBM Security Key Lifecycle Manager For Raw Decimal Petabyte Storage Resource Value Unit License + SW Subscription & Support 12 Months
7S0A007MWW	IBM Security Key Lifecycle Manager For Usable Decimal Terabyte Storage Resource Value Unit License + SW Subscription & Support 12 Months
7S0A007PWW	IBM Security Key Lifecycle Manager For Usable Decimal Petabyte Storage Resource Value Unit License + SW Subscription & Support 12 Months

Controllers for internal storage

The following table lists the storage controllers and options for internal storage of the SR550 server.

Table 25. RAID controllers and HBAs for internal storage

Part number	Feature code	Description	Maximum quantity	I/O slots supported
6 Gbps SATA controllers				
Onboard*	Onboard*	Onboard AHCI (non-RAID) / Intel RSTe (RAID)	1	-
12 Gb SAS/SATA RAID controllers				
7Y37A01082	AUNG	ThinkSystem RAID 530-8i PCIe 12Gb Adapter	2	4, 1, 2, 3
4Y37A78834	BMFT	ThinkSystem RAID 540-8i PCIe Gen4 12Gb Adapter	2	4, 1, 2, 3
4Y37A72482	BJHK	ThinkSystem RAID 5350-8i PCIe 12Gb Adapter	2	4, 1, 2, 3
7Y37A01083	AUNH	ThinkSystem RAID 730-8i 1GB Cache PCIe 12Gb Adapter	2	4, 1, 2, 3
4Y37A09722	B4RQ	ThinkSystem RAID 730-8i 2GB Flash PCIe 12Gb Adapter	2	4, 1, 2, 3
7Y37A01084	AUNJ	ThinkSystem RAID 930-8i 2GB Flash PCIe 12Gb Adapter	2	4, 1, 2, 3
4Y37A72483	BJHL	ThinkSystem RAID 9350-8i 2GB Flash PCIe 12Gb Adapter	2	4, 1, 2, 3
7Y37A01085	AUNK	ThinkSystem RAID 930-16i 4GB Flash PCIe 12Gb Adapter	1	4, 1, 2, 3
4Y37A72485	BJHN	ThinkSystem RAID 9350-16i 4GB Flash PCIe 12Gb Adapter	1	4, 1, 2, 3
4Y37A09721	B31E	ThinkSystem RAID 930-16i 8GB Flash PCIe 12Gb Adapter	1	4, 1, 2, 3
4Y37A09728	B8NY	ThinkSystem RAID 940-8i 4GB Flash PCIe Gen4 12Gb Adapter	2	4, 1, 2, 3
4Y37A78600	BM35	ThinkSystem RAID 940-16i 4GB Flash PCIe Gen4 12Gb Adapter	1	4, 1, 2, 3
4Y37A09730	B8NZ	ThinkSystem RAID 940-16i 8GB Flash PCIe Gen4 12Gb Adapter	1	4, 1, 2, 3
12 Gb SAS/SATA non-RAID HBAs				
7Y37A01088	AUNL	ThinkSystem 430-8i SAS/SATA 12Gb HBA	2	4, 1, 2, 3
7Y37A01089	AUNM	ThinkSystem 430-16i SAS/SATA 12Gb HBA	1	4, 1, 2, 3
4Y37A78601	BM51	ThinkSystem 440-8i SAS/SATA PCIe Gen4 12Gb HBA	2	4, 1, 2, 3
4Y37A78602	BM50	ThinkSystem 440-16i SAS/SATA PCIe Gen4 12Gb HBA	1	4, 1, 2, 3

* The onboard SATA controller integrated into the Intel C622 Platform Controller Hub (PCH) supports non-RAID (JBOD) AHCI mode or a hardware-assist, software RAID feature (Intel Rapid Storage Technology Enterprise [RSTe]).

For a comparison of the functions of the supported storage adapters, see the ThinkSystem RAID Adapter and HBA Reference:
https://lenovopress.com/lp1288-thinksystem-raid-adapter-and-hba-reference#sr550-support=SR550

Configuration notes:

- Low profile SAS RAID controllers and HBAs for internal storage are supported in the PCIe x8 slot 4 on the system board and full-high PCIe x8 and x16 slots supplied by the riser card 1.
- A combination of any two of the RAID 530-8i, RAID 730-8i 1GB, and RAID 930-8i controllers is allowed in the server configuration.
- A combination of the RAID 530-8i and RAID 730-8i 2GB controllers is allowed in the server configuration.
- A combination of the RAID 730-8i 2GB controller and the RAID 930-8i or RAID 730-8i 1GB controller is *not* allowed in the server configuration.

- The onboard Intel RSTe is not supported by virtualization hypervisors, including VMware vSphere (ESXi), Linux KVM, Xen, and Microsoft Hyper-V.

For more information, see the list of Product Guides in the following categories:

- RAID adapters
  http://lenovopress.com/servers/options/raid#rt=product-guide
- Host bus adapters
  http://lenovopress.com/servers/options/hba#rt=product-guide

Internal drive options

The following tables list the drive options for internal storage of the server.

2.5-inch hot-swap drives:

- 2.5-inch hot-swap 12 Gb SAS HDDs
- 2.5-inch hot-swap 6 Gb SATA HDDs
- 2.5-inch hot-swap 24 Gb SAS SSDs
- 2.5-inch hot-swap 12 Gb SAS SSDs
- 2.5-inch hot-swap 6 Gb SATA SSDs

3.5-inch hot-swap drives:

- 3.5-inch hot-swap 12 Gb SAS HDDs
- 3.5-inch hot-swap 6 Gb SATA HDDs
- 3.5-inch hot-swap 24 Gb SAS SSDs
- 3.5-inch hot-swap 12 Gb SAS SSDs
- 3.5-inch hot-swap 6 Gb SATA SSDs

Simple-swap drives:

- 3.5-inch simple-swap 6 Gb SATA HDDs

M.2 drives:

- M.2 SATA drives

M.2 drive support: The use of M.2 drives requires an additional adapter as described in the M.2 drives subsection.

SED support: The tables include a column to indicate which drives support SED encryption. The encryption functionality can be disabled if needed. Note: Not all SED-enabled drives have "SED" in the description.

Table 26. 2.5-inch hot-swap 12 Gb SAS HDDs

Part number	Feature code	Description	SED support	Max Qty
2.5-inch hot-swap HDDs - 12 Gb SAS 15K				
7XB7A00021	AULV	ThinkSystem 2.5" 300GB 15K SAS 12Gb Hot Swap 512n HDD	No	16
7XB7A00022	AULW	ThinkSystem 2.5" 600GB 15K SAS 12Gb Hot Swap 512n HDD	No	16
7XB7A00023	AULX	ThinkSystem 2.5" 900GB 15K SAS 12Gb Hot Swap 512e HDD	No	16
2.5-inch hot-swap HDDs - 12 Gb SAS 10K				
7XB7A00024	AULY	ThinkSystem 2.5" 300GB 10K SAS 12Gb Hot Swap 512n HDD	No	16
7XB7A00025	AULZ	ThinkSystem 2.5" 600GB 10K SAS 12Gb Hot Swap 512n HDD	No	16
7XB7A00026	AUM0	ThinkSystem 2.5" 900GB 10K SAS 12Gb Hot Swap 512n HDD	No	16
7XB7A00027	AUM1	ThinkSystem 2.5" 1.2TB 10K SAS 12Gb Hot Swap 512n HDD	No	16
7XB7A00028	AUM2	ThinkSystem 2.5" 1.8TB 10K SAS 12Gb Hot Swap 512e HDD	No	16
7XB7A00069	B0YS	ThinkSystem 2.5" 2.4TB 10K SAS 12Gb Hot Swap 512e HDD	No	16
2.5-inch hot-swap HDDs - 12 Gb NL SAS				
7XB7A00034	AUM6	ThinkSystem 2.5" 1TB 7.2K SAS 12Gb Hot Swap 512n HDD	No	16
7XB7A00035	AUM7	ThinkSystem 2.5" 2TB 7.2K SAS 12Gb Hot Swap 512n HDD	No	16
2.5-inch hot-swap SED HDDs - 12 Gb SAS 10K				
7XB7A00031	AUM5	ThinkSystem 2.5" 600GB 10K SAS 12Gb Hot Swap 512n HDD SED	Support	16

Table 27. 2.5-inch hot-swap 6 Gb SATA HDDs

Part number	Feature code	Description	SED support	Max Qty
2.5-inch hot-swap HDDs - 6 Gb NL SATA				
7XB7A00036	AUUE	ThinkSystem 2.5" 1TB 7.2K SATA 6Gb Hot Swap 512n HDD	No	16
7XB7A00037	AUUJ	ThinkSystem 2.5" 2TB 7.2K SATA 6Gb Hot Swap 512e HDD	No	16

Table 28. 2.5-inch hot-swap 24 Gb SAS SSDs

Part number	Feature code	Description	SED support	Max Qty
2.5-inch hot-swap SSDs - 24 Gb SAS - Mixed Use/Mainstream (3-5 DWPD)				
4XB7A80340	BNW8	ThinkSystem 2.5" PM1655 800GB Mixed Use SAS 24Gb HS SSD	Support	16
4XB7A80341	BNW9	ThinkSystem 2.5" PM1655 1.6TB Mixed Use SAS 24Gb HS SSD	Support	16
4XB7A80342	BNW6	ThinkSystem 2.5" PM1655 3.2TB Mixed Use SAS 24Gb HS SSD	Support	16
4XB7A80343	BP3K	ThinkSystem 2.5" PM1655 6.4TB Mixed Use SAS 24Gb HS SSD	Support	16
2.5-inch hot-swap SSDs - 24 Gb SAS - Read Intensive/Entry/Capacity (<3 DWPD)				
4XB7A80318	BNWC	ThinkSystem 2.5" PM1653 960GB Read Intensive SAS 24Gb HS SSD	Support	16
4XB7A80319	BNWE	ThinkSystem 2.5" PM1653 1.92TB Read Intensive SAS 24Gb HS SSD	Support	16
4XB7A80320	BNWF	ThinkSystem 2.5" PM1653 3.84TB Read Intensive SAS 24Gb HS SSD	Support	16
4XB7A80321	BP3E	ThinkSystem 2.5" PM1653 7.68TB Read Intensive SAS 24Gb HS SSD	Support	16
4XB7A80322	BP3J	ThinkSystem 2.5" PM1653 15.36TB Read Intensive SAS 24Gb HS SSD	Support	16
4XB7A80323	BP3D	ThinkSystem 2.5" PM1653 30.72TB Read Intensive SAS 24Gb HS SSD	Support	16

Table 29. 2.5-inch hot-swap 12 Gb SAS SSDs

Part number	Feature code	Description	SED support	Max Qty
2.5-inch hot-swap SSDs - 12 Gb SAS - Mixed Use/Mainstream (3-5 DWPD)				
4XB7A17062	B8HU	ThinkSystem 2.5" PM1645a 800GB Mainstream SAS 12Gb Hot Swap SSD	No	16
4XB7A17063	B8J4	ThinkSystem 2.5" PM1645a 1.6TB Mainstream SAS 12Gb Hot Swap SSD	No	16
4XB7A17064	B8JD	ThinkSystem 2.5" PM1645a 3.2TB Mainstream SAS 12Gb Hot Swap SSD	No	16
4XB7A17065	B8JA	ThinkSystem 2.5" PM1645a 6.4TB Mainstream SAS 12Gb Hot Swap SSD	No	16
2.5-inch hot-swap SSDs - 12 Gb SAS - Read Intensive/Entry/Capacity (<3 DWPD)				
4XB7A38175	B91A	ThinkSystem 2.5" PM1643a 960GB Entry SAS 12Gb Hot Swap SSD	No	16
4XB7A38176	B91B	ThinkSystem 2.5" PM1643a 1.92TB Entry SAS 12Gb Hot Swap SSD	No	16
4XB7A17054	B91C	ThinkSystem 2.5" PM1643a 3.84TB Entry SAS 12Gb Hot Swap SSD	No	16
4XB7A17055	B91D	ThinkSystem 2.5" PM1643a 7.68TB Entry SAS 12Gb Hot Swap SSD	No	16
4XB7A17056	BC4R	ThinkSystem 2.5" PM1643a 15.36TB Entry SAS 12Gb Hot Swap SSD	No	16

Table 30. 2.5-inch hot-swap 6 Gb SATA SSDs

Part number	Feature code	Description	SED support	Max Qty
2.5-inch hot-swap SSDs - 6 Gb SATA - Mixed Use/Mainstream (3-5 DWPD)				
4XB7A82289	BQ21	ThinkSystem 2.5" 5400 MAX 480GB Mixed Use SATA 6Gb HS SSD	Support	16
4XB7A82290	BQ24	ThinkSystem 2.5" 5400 MAX 960GB Mixed Use SATA 6Gb HS SSD	Support	16
4XB7A82291	BQ22	ThinkSystem 2.5" 5400 MAX 1.92TB Mixed Use SATA 6Gb HS SSD	Support	16

Part number	Feature code	Description	SED support	Max Qty
4XB7A82292	BQ23	ThinkSystem 2.5" 5400 MAX 3.84TB Mixed Use SATA 6Gb HS SSD	Support	16
4XB7A17125	BA7Q	ThinkSystem 2.5" S4620 480GB Mixed Use SATA 6Gb HS SSD	No	16
4XB7A17126	BA4T	ThinkSystem 2.5" S4620 960GB Mixed Use SATA 6Gb HS SSD	No	16
4XB7A17127	BA4U	ThinkSystem 2.5" S4620 1.92TB Mixed Use SATA 6Gb HS SSD	No	16
4XB7A17128	BK7L	ThinkSystem 2.5" S4620 3.84TB Mixed Use SATA 6Gb HS SSD	No	16
4XB7A17087	B8J1	ThinkSystem 2.5" 5300 240GB Mainstream SATA 6Gb Hot Swap SSD	No	16
4XB7A17088	B8HY	ThinkSystem 2.5" 5300 480GB Mainstream SATA 6Gb Hot Swap SSD	No	16
4XB7A17089	B8J6	ThinkSystem 2.5" 5300 960GB Mainstream SATA 6Gb Hot Swap SSD	No	16
4XB7A17090	B8JE	ThinkSystem 2.5" 5300 1.92TB Mainstream SATA 6Gb Hot Swap SSD	No	16
4XB7A17091	B8J7	ThinkSystem 2.5" 5300 3.84TB Mainstream SATA 6Gb Hot Swap SSD	No	16
4XB7A13633	B49L	ThinkSystem 2.5" S4610 240GB Mixed Use SATA 6Gb HS SSD	No	16
4XB7A13636	B49P	ThinkSystem 2.5" S4610 1.92TB Mixed Use SATA 6Gb HS SSD	No	16
4XB7A13637	B49Q	ThinkSystem 2.5" S4610 3.84TB Mixed Use SATA 6Gb HS SSD	No	16
2.5-inch hot-swap SSDs - 6 Gb SATA - Read Intensive/Entry (<3 DWPD)				
4XB7A82258	BQ1Q	ThinkSystem 2.5" 5400 PRO 240GB Read Intensive SATA 6Gb HS SSD	Support	16
4XB7A82259	BQ1P	ThinkSystem 2.5" 5400 PRO 480GB Read Intensive SATA 6Gb HS SSD	Support	16
4XB7A82260	BQ1R	ThinkSystem 2.5" 5400 PRO 960GB Read Intensive SATA 6Gb HS SSD	Support	16
4XB7A82261	BQ1X	ThinkSystem 2.5" 5400 PRO 1.92TB Read Intensive SATA 6Gb HS SSD	Support	16
4XB7A82262	BQ1S	ThinkSystem 2.5" 5400 PRO 3.84TB Read Intensive SATA 6Gb HS SSD	Support	16
4XB7A82263	BQ1T	ThinkSystem 2.5" 5400 PRO 7.68TB Read Intensive SATA 6Gb HS SSD	Support	16
4XB7A72438	BM8B	ThinkSystem 2.5" PM893 480GB Read Intensive SATA 6Gb HS SSD	No	16
4XB7A72439	BM8A	ThinkSystem 2.5" PM893 960GB Read Intensive SATA 6Gb HS SSD	No	16
4XB7A72440	BM89	ThinkSystem 2.5" PM893 1.92TB Read Intensive SATA 6Gb HS SSD	No	16
4XB7A72441	BM88	ThinkSystem 2.5" PM893 3.84TB Read Intensive SATA 6Gb HS SSD	No	16
4XB7A72442	BM87	ThinkSystem 2.5" PM893 7.68TB Read Intensive SATA 6Gb HS SSD	No	16
4XB7A17072	B99D	ThinkSystem 2.5" S4520 240GB Read Intensive SATA 6Gb HS SSD	No	16
4XB7A17101	BA7G	ThinkSystem 2.5" S4520 480GB Read Intensive SATA 6Gb HS SSD	No	16
4XB7A17102	BA7H	ThinkSystem 2.5" S4520 960GB Read Intensive SATA 6Gb HS SSD	No	16
4XB7A17103	BA7J	ThinkSystem 2.5" S4520 1.92TB Read Intensive SATA 6Gb HS SSD	No	16
4XB7A17104	BK77	ThinkSystem 2.5" S4520 3.84TB Read Intensive SATA 6Gb HS SSD	No	16
4XB7A17105	BK78	ThinkSystem 2.5" S4520 7.68TB Read Intensive SATA 6Gb HS SSD	No	16
4XB7A38271	BCTC	ThinkSystem 2.5" Multi Vendor 240GB Entry SATA 6Gb Hot Swap SSD	No	16
4XB7A38272	BCTD	ThinkSystem 2.5" Multi Vendor 480GB Entry SATA 6Gb Hot Swap SSD	No	16
4XB7A38273	BCTE	ThinkSystem 2.5" Multi Vendor 960GB Entry SATA 6Gb Hot Swap SSD	No	16
4XB7A38274	BCTF	ThinkSystem 2.5" Multi Vendor 1.92TB Entry SATA 6Gb Hot Swap SSD	No	16
4XB7A38275	BCTG	ThinkSystem 2.5" Multi Vendor 3.84TB Entry SATA 6Gb Hot Swap SSD	No	16

Part number	Feature code	Description	SED support	Max Qty
4XB7A17075	B8HV	ThinkSystem 2.5" 5300 240GB Entry SATA 6Gb Hot Swap SSD	No	16
4XB7A17076	B8JM	ThinkSystem 2.5" 5300 480GB Entry SATA 6Gb Hot Swap SSD	No	16
4XB7A17077	B8HP	ThinkSystem 2.5" 5300 960GB Entry SATA 6Gb Hot Swap SSD	No	16
4XB7A17078	B8J5	ThinkSystem 2.5" 5300 1.92TB Entry SATA 6Gb Hot Swap SSD	No	16
4XB7A17079	B8JP	ThinkSystem 2.5" 5300 3.84TB Entry SATA 6Gb Hot Swap SSD	No	16
4XB7A17080	B8J2	ThinkSystem 2.5" 5300 7.68TB Entry SATA 6Gb Hot Swap SSD	No	16
4XB7A38185	B9AC	ThinkSystem 2.5" 5210 960GB Entry SATA 6Gb Hot Swap QLC SSD	No	16
4XB7A38144	B7EW	ThinkSystem 2.5" 5210 1.92TB Entry SATA 6Gb Hot Swap QLC SSD	No	16
4XB7A38145	B7EX	ThinkSystem 2.5" 5210 3.84TB Entry SATA 6Gb Hot Swap QLC SSD	No	16
4XB7A38146	B7EY	ThinkSystem 2.5" 5210 7.68TB Entry SATA 6Gb Hot Swap QLC SSD	No	16
4XB7A10197	B34K	ThinkSystem 2.5" PM883 960GB Entry SATA 6Gb Hot Swap SSD	No	16
4XB7A10198	B34L	ThinkSystem 2.5" PM883 1.92TB Entry SATA 6Gb Hot Swap SSD	No	16
4XB7A10200	B4D2	ThinkSystem 2.5" PM883 7.68TB Entry SATA 6Gb Hot Swap SSD	No	16

Table 31. 3.5-inch hot-swap 12 Gb SAS HDDs

Part number	Feature code	Description	SED support	Max Qty
3.5-inch hot-swap HDDs - 12 Gb SAS 10K				
7XB7A00063	B1JJ	ThinkSystem 3.5" 300GB 10K SAS 12Gb Hot Swap 512n HDD	No	12
3.5-inch hot-swap HDDs - 12 Gb SAS 15K				
7XB7A00038	AUU2	ThinkSystem 3.5" 300GB 15K SAS 12Gb Hot Swap 512n HDD	No	12
7XB7A00039	AUU3	ThinkSystem 3.5" 600GB 15K SAS 12Gb Hot Swap 512n HDD	No	12
7XB7A00040	AUUC	ThinkSystem 3.5" 900GB 15K SAS 12Gb Hot Swap 512e HDD	No	12
3.5-inch hot-swap HDDs - 12 Gb NL SAS				
7XB7A00042	AUU5	ThinkSystem 3.5" 2TB 7.2K SAS 12Gb Hot Swap 512n HDD	No	12
7XB7A00043	AUU6	ThinkSystem 3.5" 4TB 7.2K SAS 12Gb Hot Swap 512n HDD	No	12
7XB7A00044	AUU7	ThinkSystem 3.5" 6TB 7.2K SAS 12Gb Hot Swap 512e HDD	No	12
7XB7A00045	B0YR	ThinkSystem 3.5" 8TB 7.2K SAS 12Gb Hot Swap 512e HDD	No	12
7XB7A00046	AUUG	ThinkSystem 3.5" 10TB 7.2K SAS 12Gb Hot Swap 512e HDD	No	12
7XB7A00067	B117	ThinkSystem 3.5" 12TB 7.2K SAS 12Gb Hot Swap 512e HDD	No	12
4XB7A13906	B496	ThinkSystem 3.5" 14TB 7.2K SAS 12Gb Hot Swap 512e HDD	No	12
4XB7A13911	B7EZ	ThinkSystem 3.5" 16TB 7.2K SAS 12Gb Hot Swap 512e HDD	No	12
4XB7A38266	BCFP	ThinkSystem 3.5" 18TB 7.2K SAS 12Gb Hot Swap 512e HDD	No	12
4XB7A80353	BPKU	ThinkSystem 3.5" 20TB 7.2K SAS 12Gb Hot Swap 512e HDD	No	12
3.5-inch hot-swap SED HDDs - 12 Gb NL SAS				
7XB7A00047	AUUH	ThinkSystem 3.5" 4TB 7.2K SAS 12Gb Hot Swap 512n HDD FIPS	Support	12

Table 32. 3.5-inch hot-swap 6 Gb SATA HDDs

Part number	Feature code	Description	SED support	Max Qty
3.5-inch hot-swap HDDs - 6 Gb NL SATA				
7XB7A00049	AUUF	ThinkSystem 3.5" 1TB 7.2K SATA 6Gb Hot Swap 512n HDD	No	12
7XB7A00050	AUUD	ThinkSystem 3.5" 2TB 7.2K SATA 6Gb Hot Swap 512n HDD	No	12
7XB7A00051	AUU8	ThinkSystem 3.5" 4TB 7.2K SATA 6Gb Hot Swap 512n HDD	No	12
7XB7A00052	AUUA	ThinkSystem 3.5" 6TB 7.2K SATA 6Gb Hot Swap 512e HDD	No	12
7XB7A00053	AUU9	ThinkSystem 3.5" 8TB 7.2K SATA 6Gb Hot Swap 512e HDD	No	12
7XB7A00054	AUUB	ThinkSystem 3.5" 10TB 7.2K SATA 6Gb Hot Swap 512e HDD	No	12
7XB7A00068	B118	ThinkSystem 3.5" 12TB 7.2K SATA 6Gb Hot Swap 512e HDD	No	12
4XB7A13907	B497	ThinkSystem 3.5" 14TB 7.2K SATA 6Gb Hot Swap 512e HDD	No	12
4XB7A13914	B7F0	ThinkSystem 3.5" 16TB 7.2K SATA 6Gb Hot Swap 512e HDD	No	12
4XB7A38130	BCFH	ThinkSystem 3.5" 18TB 7.2K SATA 6Gb Hot Swap 512e HDD	No	12
4XB7A80354	BPKV	ThinkSystem 3.5" 20TB 7.2K SATA 6Gb Hot Swap 512e HDD	No	12

Table 33. 3.5-inch hot-swap 24 Gb SAS SSDs

Part number	Feature code	Description	SED support	Max Qty
3.5-inch hot-swap SSDs - 24 Gb SAS - Mixed Use/Mainstream (3-5 DWPD)				
4XB7A80344	BNW7	ThinkSystem 3.5" PM1655 800GB Mixed Use SAS 24Gb HS SSD	Support	12
4XB7A80345	BNWA	ThinkSystem 3.5" PM1655 1.6TB Mixed Use SAS 24Gb HS SSD	Support	12
4XB7A80346	BNWB	ThinkSystem 3.5" PM1655 3.2TB Mixed Use SAS 24Gb HS SSD	Support	12
4XB7A80347	BP3G	ThinkSystem 3.5" PM1655 6.4TB Mixed Use SAS 24Gb HS SSD	Support	12
3.5-inch hot-swap SSDs - 24 Gb SAS - Read Intensive/Entry/Capacity (<3 DWPD)				
4XB7A80324	BNWD	ThinkSystem 3.5" PM1653 960GB Read Intensive SAS 24Gb HS SSD	Support	12
4XB7A80325	BNWG	ThinkSystem 3.5" PM1653 1.92TB Read Intensive SAS 24Gb HS SSD	Support	12
4XB7A80326	BNWH	ThinkSystem 3.5" PM1653 3.84TB Read Intensive SAS 24Gb HS SSD	Support	12
4XB7A80327	BP3F	ThinkSystem 3.5" PM1653 7.68TB Read Intensive SAS 24Gb HS SSD	Support	12
4XB7A80328	BP3H	ThinkSystem 3.5" PM1653 15.36TB Read Intensive SAS 24Gb HS SSD	Support	12

Table 34. 3.5-inch hot-swap 12 Gb SAS SSDs

Part number	Feature code	Description	SED support	Max Qty
3.5-inch hot-swap SSDs - 12 Gb SAS - Mixed Use/Mainstream (3-5 DWPD)				
4XB7A17066	B8HT	ThinkSystem 3.5" PM1645a 800GB Mainstream SAS 12Gb Hot Swap SSD	No	12
4XB7A17043	B8JN	ThinkSystem 3.5" PM1645a 1.6TB Mainstream SAS 12Gb Hot Swap SSD	No	12
4XB7A17067	B8JK	ThinkSystem 3.5" PM1645a 3.2TB Mainstream SAS 12Gb Hot Swap SSD	No	12
4XB7A17068	B8JG	ThinkSystem 3.5" PM1645a 6.4TB Mainstream SAS 12Gb Hot Swap SSD	No	12
3.5-inch hot-swap SSDs - 12 Gb SAS - Read Intensive/Entry/Capacity (<3 DWPD)				
4XB7A17058	B91E	ThinkSystem 3.5" PM1643a 3.84TB Entry SAS 12Gb Hot Swap SSD	No	12
4XB7A17059	BEVK	ThinkSystem 3.5" PM1643a 7.68TB Entry SAS 12Gb Hot Swap SSD	No	12

Table 35. 3.5-inch hot-swap 6 Gb SATA SSDs

Part number	Feature code	Description	SED support	Max Qty
3.5-inch hot-swap SSDs - 6 Gb SATA - Mixed Use/Mainstream (3-5 DWPD)				
4XB7A17137	BA4W	ThinkSystem 3.5" S4620 480GB Mixed Use SATA 6Gb HS SSD	No	12
4XB7A17138	BA4X	ThinkSystem 3.5" S4620 960GB Mixed Use SATA 6Gb HS SSD	No	12
4XB7A17139	BA4Y	ThinkSystem 3.5" S4620 1.92TB Mixed Use SATA 6Gb HS SSD	No	12
4XB7A17140	BK7P	ThinkSystem 3.5" S4620 3.84TB Mixed Use SATA 6Gb HS SSD	No	12
4XB7A17096	B8JL	ThinkSystem 3.5" 5300 240GB Mainstream SATA 6Gb Hot Swap SSD	No	12
4XB7A17097	B8JF	ThinkSystem 3.5" 5300 480GB Mainstream SATA 6Gb Hot Swap SSD	No	12
4XB7A17098	B8J0	ThinkSystem 3.5" 5300 960GB Mainstream SATA 6Gb Hot Swap SSD	No	12
4XB7A17099	B8HR	ThinkSystem 3.5" 5300 1.92TB Mainstream SATA 6Gb Hot Swap SSD	No	12
4XB7A17100	B8HX	ThinkSystem 3.5" 5300 3.84TB Mainstream SATA 6Gb Hot Swap SSD	No	12
4XB7A13639	B49R	ThinkSystem 3.5" S4610 240GB Mixed Use SATA 6Gb HS SSD	No	12
4XB7A13642	B49U	ThinkSystem 3.5" S4610 1.92TB Mixed Use SATA 6Gb HS SSD	No	12
4XB7A13643	B49V	ThinkSystem 3.5" S4610 3.84TB Mixed Use SATA 6Gb HS SSD	No	12
3.5-inch hot-swap SSDs - 6 Gb SATA - Read Intensive/Entry (<3 DWPD)				
4XB7A17118	BA7K	ThinkSystem 3.5" S4520 240GB Read Intensive SATA 6Gb HS SSD	No	12
4XB7A17119	BA7L	ThinkSystem 3.5" S4520 480GB Read Intensive SATA 6Gb HS SSD	No	12
4XB7A17120	BA7M	ThinkSystem 3.5" S4520 960GB Read Intensive SATA 6Gb HS SSD	No	12
4XB7A17121	BA7N	ThinkSystem 3.5" S4520 1.92TB Read Intensive SATA 6Gb HS SSD	No	12
4XB7A17122	BK7F	ThinkSystem 3.5" S4520 3.84TB Read Intensive SATA 6Gb HS SSD	No	12
4XB7A17123	BK7G	ThinkSystem 3.5" S4520 7.68TB Read Intensive SATA 6Gb HS SSD	No	12
4XB7A38276	BCTH	ThinkSystem 3.5" Multi Vendor 240GB Entry SATA 6Gb Hot Swap SSD	No	12
4XB7A38277	BCTJ	ThinkSystem 3.5" Multi Vendor 480GB Entry SATA 6Gb Hot Swap SSD	No	12
4XB7A38278	BCTK	ThinkSystem 3.5" Multi Vendor 960GB Entry SATA 6Gb Hot Swap SSD	No	12
4XB7A38279	BCTL	ThinkSystem 3.5" Multi Vendor 1.92TB Entry SATA 6Gb Hot Swap SSD	No	12
4XB7A38281	BCTM	ThinkSystem 3.5" Multi Vendor 3.84TB Entry SATA 6Gb Hot Swap SSD	No	12
4XB7A17081	B8JB	ThinkSystem 3.5" 5300 240GB Entry SATA 6Gb Hot Swap SSD	No	12
4XB7A17082	B8J9	ThinkSystem 3.5" 5300 480GB Entry SATA 6Gb Hot Swap SSD	No	12
4XB7A17083	B8JC	ThinkSystem 3.5" 5300 960GB Entry SATA 6Gb Hot Swap SSD	No	12
4XB7A17084	B8HZ	ThinkSystem 3.5" 5300 1.92TB Entry SATA 6Gb Hot Swap SSD	No	12
4XB7A17085	B8HQ	ThinkSystem 3.5" 5300 3.84TB Entry SATA 6Gb Hot Swap SSD	No	12
4XB7A17086	B8J3	ThinkSystem 3.5" 5300 7.68TB Entry SATA 6Gb Hot Swap SSD	No	12
4XB7A17178	B6TP	ThinkSystem 3.5" PM883 960GB Entry SATA 6Gb Hot Swap SSD	No	12
4XB7A17179	B6JY	ThinkSystem 3.5" PM883 1.92TB Entry SATA 6Gb Hot Swap SSD	No	12

Table 36. 3.5-inch simple-swap 6 Gb SATA HDDs

Part number	Feature code	Description	SED support	Max Qty
3.5-inch simple-swap HDDs - 6 Gb NL SATA				
7XB7A00055	AUZS	ThinkSystem 1TB 7.2K 6Gbps SATA 3.5" Simple Swap 512n HDD	No	8
7XB7A00056	AUZT	ThinkSystem 2TB 7.2K 6Gbps SATA 3.5" Simple Swap 512n HDD	No	8
7XB7A00057	AUZU	ThinkSystem 4TB 7.2K 6Gbps SATA 3.5" Simple Swap 512n HDD	No	8
7XB7A00058	AXC7	ThinkSystem 6TB 7.2K 6Gbps SATA 3.5" Simple Swap 512e HDD	No	8
7XB7A00059	AXC6	ThinkSystem 8TB 7.2K 6Gbps SATA 3.5" Simple Swap 512e HDD	No	8
7XB7A00060	AXC8	ThinkSystem 3.5" 10TB 7.2K SATA 6Gb Simple Swap 512e HDD	No	8

Table 38. M.2 SATA drives

Part number	Feature code	Description	SED support	Max Qty
M.2 SSDs - 6 Gb SATA - Read Intensive/Entry (<3 DWPD)				
4XB7A82286	BQ1Z	ThinkSystem M.2 5400 PRO 240GB Read Intensive SATA 6Gb NHS SSD	Support	2*
4XB7A82287	BQ1Y	ThinkSystem M.2 5400 PRO 480GB Read Intensive SATA 6Gb NHS SSD	Support	2*
7N47A00129	AUUL	ThinkSystem M.2 32GB SATA 6Gbps Non-Hot Swap SSD	No	2
7N47A00130	AUUV	ThinkSystem M.2 128GB SATA 6Gbps Non-Hot Swap SSD	No	2

* In configurations with 12x LFF drive bays, the 5400 M.2 drives require the SSD Thermal Kit, 4XH7A08791. See the Cooling section for details.

Optical drives

The server supports the external USB optical drive listed in the following table.

Table 39. External optical drive

Part number	Feature code	Description
7XA7A05926	AVV8	ThinkSystem External USB DVD RW Optical Disk Drive

The drive is based on the Lenovo Slim DVD Burner DB65 drive and supports the following formats: DVD-RAM, DVD-RW, DVD+RW, DVD+R, DVD-R, DVD-ROM, DVD-R DL, CD-RW, CD-R, CD-ROM.

I/O expansion

The SR550 server supports one LOM card slot and up to six PCIe slots: one PCIe slot on the system planar and up to five PCIe slots with different riser cards installed into two riser sockets on the system planar (one riser socket supports installation of one riser card).

The slot form factors are as follows:

- LOM card slot
- Slot 1: PCIe 3.0 x16 or PCIe 3.0 x8; full-height, half-length (PCIe x16 slot is double-wide)
- Slot 2: PCIe 3.0 x8; full-height, half-length (not present if the slot 1 is PCIe x16)
- Slot 3: PCIe 3.0 x8 or ML2 x8; full-height, half-length
- Slot 4: PCIe 3.0 x8; low profile (vertical slot on system planar)

- Slot 5: PCIe 3.0 x16; full-height, half-length
- Slot 6: PCIe 3.0 x8; full-height, half-length

Notes:

- Slot 5 requires the second processor to be installed.
- Slot 4 is not present if the COM Port Upgrade Kit is installed.

The locations of the PCIe slots are shown in the following figure.

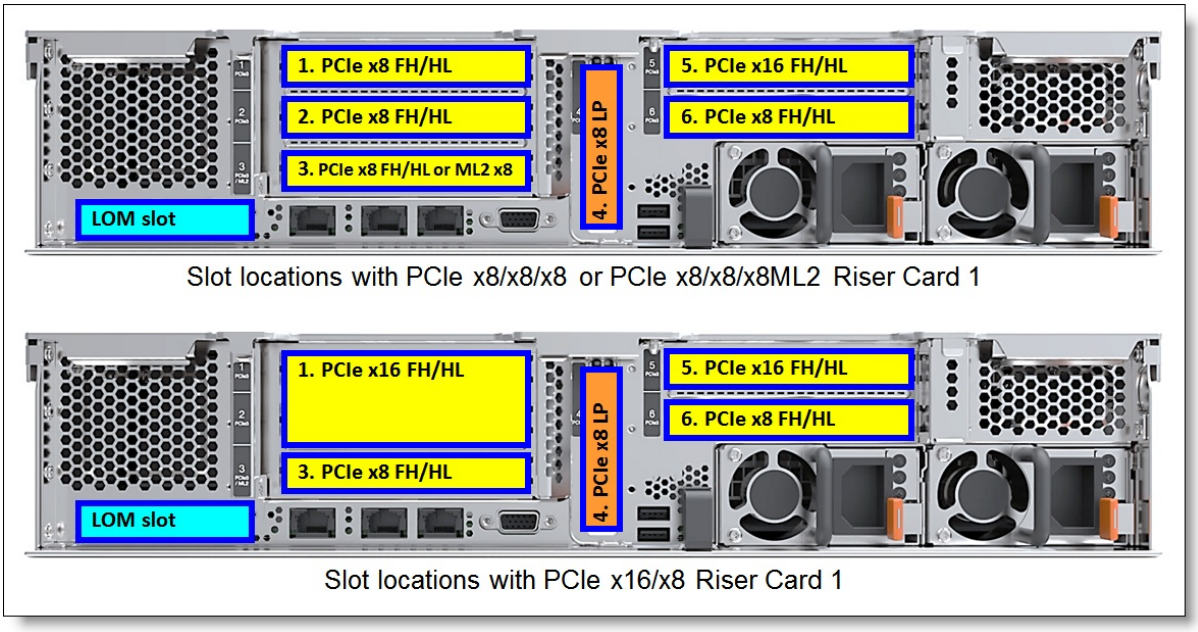

Figure 8. Slot locations

Riser 1 supplies slots 1, 2, and 3, and Riser 2 supplies slots 5 and 6. The slots that are available for use depend on the number of riser cards that are installed and whether the second processor is installed, as shown in the following table.

Table 40. Slots available for use

Riser Card 1	Riser Card 2	Slots available for use	
		Processor 1	Processor 2
None	None	LOM, 4	-
None	PCIe x16/x8	LOM, 4, 6	5
PCIe x8/x8/x8 or PCIe x8/x8/x8ML2	None	LOM, 1, 2, 3, 4	-
PCIe x8/x8/x8 or PCIe x8/x8/x8ML2	PCIe x16/x8	LOM, 1, 2, 3, 4, 6	5
PCIe x16/x8	None	LOM, 1, 3, 4	-
PCIe x16/x8	PCIe x16/x8	LOM, 1, 3, 4, 6	5

The following table lists available PCIe riser card options.

Table 41. PCIe riser cards and miscellaneous options

Part number	Feature code	Description	Maximum quantity
x8 Riser Card 1 options (Riser card supplies slots 1, 2, and 3)			
7XH7A02677	AUR4	ThinkSystem 2U x8/x8/x8 PCIe FH Riser 1	1
7XH7A02680	AUR7	ThinkSystem 2U x8/x8/x8ML2 PCIe FH Riser 1	1
x16 Riser Card 1 option (Riser card supplies slots 1 and 3)			
7XH7A02678	AUR3	ThinkSystem 2U x16/x8 PCIe FH Riser 1	1
Riser Card 2 option (Riser card supplies slots 5 and 6)			
7XH7A02679	AURC	ThinkSystem SR550/SR650 (x16/x8)/(x16/x16) PCIe FH Riser 2 Kit	1
Serial port upgrade kit			
4Z17A80446	BMNJ	ThinkSystem COM Port Upgrade Kit v2	1
7Z17A02577	AUSL	ThinkSystem COM Port Upgrade Kit	1

The COM Port Upgrade Kit, (4Z17A80446 or 7Z17A02577), is used for mounting the external serial port on the rear of the SR550. This option includes the bracket and the cable. The COM Port option is mounted in place of the PCIe slot 4, and the PCIe slot 4 cannot be used.

Network adapters

The SR550 server has two onboard 1 GbE ports (no 10/100 Mb support) and up to two additional onboard 1/10 GbE network ports (no 10/100 Mb support) with optional LOM cards. Onboard ports and LOM cards use the Intel Ethernet Connection X722 1/10 GbE technology integrated into the Intel C622 Platform Controller Hub (PCH). The server also supports ML2 adapters that are installed in the custom ML2 slot provided by an ML2 riser card. The LOM cards support direct connectivity to the XClarity Controller via the Network Controller Sideband Interface (NSCI) for out-of-band systems management.

Note: ML2 network adapters do not support NSCI when used in the SR550 server.

The integrated Intel Ethernet Connection X722 has the following features:

- Two 1 Gb Ethernet ports (no 10/100 Mb Ethernet support)
- Two 1/10 Gb Ethernet capable ports (no 10/100 Mb Ethernet support)
- NIC Teaming (load balancing and failover)
- Data Center Bridging
- iWARP (RDMA over IP)
- VMDq and SR-IOV virtualization (10 Gb speeds only, 4 PFs, 128 VFs per device)
- IEEE 802.1q Virtual Local Area Networks (VLANs)
- NVGRE, VXLAN, IPinGRE, and MACinUDP network virtualization
- IEEE 802.1Qbg Edge Virtual Bridging
- TCP, IP, and UDP checksum offload
- Large Send Offload (LSO) and Generic Send Offload (GSO)
- Receive Side Scaling (RSS) for TCP and UDP traffic
- Jumbo frames up to 9.5 Kbytes

The following table lists the network adapters that are supported with the SR550 server.

Table 42. Network adapters

Part number	Feature code	Description	Max qty#	I/O slots supported
LOM cards - 1 Gb Ethernet				
7ZT7A00544	AUKG	ThinkSystem 1Gb 2-port RJ45 LOM	1	LOM slot
LOM cards - 10 Gb Ethernet				
7ZT7A00548	AUKL	ThinkSystem 10Gb 2-port Base-T LOM	1	LOM slot
7ZT7A00546	AUKJ	ThinkSystem 10Gb 2-port SFP+ LOM	1*	LOM slot
ML2 adapters - 10 Gb Ethernet				
7ZT7A00497	AUKQ	Broadcom NX-E ML2 10Gb 2-Port Base-T Ethernet Adapter	1	3 (ML2)
01CV770	AU7Z	Emulex VFA5.2 ML2 2x10 GbE SFP+ Adapter and FCoE/iSCSI SW	1*	3 (ML2)
00JY940	ATRH	Intel X710-DA2 ML2 2x10GbE SFP+ Adapter	1*	3 (ML2)
PCIe Low Profile adapters - 1 Gb Ethernet				
7ZT7A00482	AUZX	Broadcom 5720 1GbE RJ45 2-Port PCIe Ethernet Adapter	5 / 6	4, 2, 6, 3, 5, 1
7ZT7A00484	AUZV	Broadcom 5719 1GbE RJ45 4-Port PCIe Ethernet Adapter	5 / 6	4, 2, 6, 3, 5, 1
7ZT7A00534	AUZY	ThinkSystem I350-T2 PCIe 1Gb 2-Port RJ45 Ethernet Adapter	5 / 6	4, 2, 6, 3, 5, 1
7ZT7A00535	AUZW	ThinkSystem I350-T4 PCIe 1Gb 4-Port RJ45 Ethernet Adapter	5 / 6	4, 2, 6, 3, 5, 1
PCIe Low Profile adapters - 10 Gb Ethernet				
7ZT7A00496	AUKP	Broadcom 57416 10GBASE-T 2-Port PCIe Ethernet Adapter	5 / 6	4, 2, 6, 3, 5, 1
00AG570	AT7S	Emulex VFA5.2 2x10 GbE SFP+ PCIe Adapter	5 / 6*	4, 1, 2, 3, 5, 6
00AG580	AT7T	Emulex VFA5.2 2x10 GbE SFP+ Adapter and FCoE/iSCSI SW	5 / 6*	4, 1, 2, 3, 5, 6
00MM860	ATPX	Intel X550-T2 Dual Port 10GBase-T Adapter	5 / 6	4, 2, 6, 3, 5, 1
7ZT7A00537	AUKX	Intel X710-DA2 PCIe 10Gb 2-Port SFP+ Ethernet Adapter	5 / 6*	4, 1, 2, 3, 5, 6
4XC7A79699	BMXB	ThinkSystem Intel X710-T4L 10GBase-T 4-Port PCIe Ethernet Adapter	5 / 6	4, 2, 6, 3, 5, 1
4XC7A08225	B31G	QLogic QL41134 PCIe 10Gb 4-Port Base-T Ethernet Adapter	5 / 6	4, 2, 6, 3, 5, 1
PCIe Full Height adapters - 10 Gb Ethernet				
7ZT7A00493	AUKN	Emulex OCe14104B-NX PCIe 10Gb 4-Port SFP+ Ethernet Adapter	3 / 3*	1, 2, 3, 5, 6
PCIe Low Profile adapters - 25 Gb Ethernet				
4XC7A08238	B5T0	Broadcom 57414 10/25GbE SFP28 2-port PCIe Ethernet Adapter	5 / 6*	4, 1, 2, 3, 5, 6
PCIe Low Profile adapters - Omni-Path				
00WE027	AU0B	Intel OPA 100 Series Single-port PCIe 3.0 x16 HFA	1 / 2*	1, 5

The maximum quantity shown is with one processor / two processors (this does not apply to LOM cards and ML2 adapters).
* The adapter comes without transceivers or cables; for ordering transceivers or cables, see the adapter product guide

Configuration notes:

- ML2 network adapters are supported in the ML2 x8 slot 3 supplied by the x8/x8/x8ML2 Riser Card 1 (7XH7A02680).
- PCIe full-height network adapters are supported in the full-height PCIe x8 and x16 slots supplied by the riser cards 1 and 2.
- Omni-Path adapters are supported in the full-height PCIe x16 slots supplied by the riser cards 1 and 2.
- PCIe Low Profile network adapters (except Omni-Path adapters) are supported in the low profile PCIe x8 slot 4 on the system board and full-height PCIe x8 and x16 slots supplied by the riser cards 1 and 2.
- Some adapters require supported transceivers or DAC cables to be purchased for the adapter. The maximum number of transceivers or cables that are supported per adapter equals the quantity of the adapter ports, and all adapter ports must have the same type of the transceiver or cable selected.

For more information, see the list of Product Guides in the Ethernet Adapters category:
http://lenovopress.com/servers/options/ethernet#rt=product-guide

SAS adapters for external storage

The following table lists SAS RAID controllers and HBAs for external storage attachments that are supported by the SR550 server.

Table 43. SAS RAID adapters and HBAs for external storage

Part number	Feature code	Description	Maximum quantity*	I/O slots supported
12 Gbps SAS RAID adapters				
7Y37A01087	AUNQ	ThinkSystem RAID 930-8e 4GB Flash PCIe 12Gb Adapter	4 / 4	4,1,2,3,5
4Y37A78836	BNWJ	ThinkSystem RAID 940-8e 4GB Flash PCIe Gen4 12Gb Adapter	4 / 4	4,1,2,3,5
12 Gbps SAS HBAs				
7Y37A01090	AUNR	ThinkSystem 430-8e SAS/SATA 12Gb HBA	4 / 6	4,1,2,3,5
7Y37A01091	AUNN	ThinkSystem 430-16e SAS/SATA 12Gb HBA	4 / 6	4,1,2,3,5
4Y37A09724	B8P7	ThinkSystem 440-16e SAS/SATA PCIe Gen4 12Gb HBA	4 / 6	4,1,2,3,5
4Y37A78837	BNWK	ThinkSystem 440-8e SAS/SATA PCIe Gen4 12Gb HBA	4 / 6	4,1,2,3,5

* The maximum quantity shown is with one processor / two processors.

For a comparison of the functions of the supported storage adapters, see the ThinkSystem RAID Adapter and HBA Reference:
https://lenovopress.com/lp1288#sr550-support=SR550&internal-or-external-ports=External

Configuration notes:

- Low profile SAS RAID controllers and HBAs for external storage are supported in the low profile PCIe x8 slot 4 on the system board and full-high PCIe x8 and x16 slots supplied by the riser cards 1 and 2.
- The total quantity of the RAID 730-8i 2GB, RAID 930-8i, RAID 930-16i, and RAID 930-8e controllers in a supported combination in the server must not exceed 4 (up to 4 supercapacitors can be mounted in the server).

Mixing storage adapter families: The following HBA/RAID adapter combinations are supported:

- X30 external adapters with other X30 adapters (internal or external)
- X40 external adapters with other X40 adapters (internal or external)
- X40 external adapters with X350 internal adapters

The following HBA/RAID adapter combinations are *not* supported:

- X30 adapters (internal or external) with X40 adapters (internal or external)
- X30 adapters (internal or external) with X350 internal adapters

For more information, see the list of Product Guides in the following categories:

- RAID adapters
  http://lenovopress.com/servers/options/raid#rt=product-guide
- Host bus adapters
  http://lenovopress.com/servers/options/hba#rt=product-guide

Fibre Channel host bus adapters

The following table lists Fibre Channel HBAs supported by the SR550 server.

Table 44. Fibre Channel HBAs

Part number	Feature code	Description	Maximum quantity*	I/O slots supported
16 Gb Fibre Channel - PCIe				
01CV830	ATZU	Emulex 16Gb Gen6 FC Single-port HBA	5 / 6	4, 1, 2, 3, 5, 6
01CV840	ATZV	Emulex 16Gb Gen6 FC Dual-port HBA	5 / 6	4, 1, 2, 3, 5, 6
01CV750	ATZB	QLogic 16Gb Enhanced Gen5 FC Single-port HBA	5 / 6	4, 1, 2, 3, 5, 6
01CV760	ATZC	QLogic 16Gb Enhanced Gen5 FC Dual-port HBA	5 / 6	4, 1, 2, 3, 5, 6
8 Gb Fibre Channel - PCIe (available only in PRC and Asia Pacific)				
4XC7A08221	B0X0	Emulex LPe12002-M8-L PCIe 8Gb 2-Port SFP+ FC HBA	5 / 6	4, 1, 2, 3, 5, 6

* The maximum quantity shown is with one processor / two processors.

Configuration note: FC HBAs are supported in the low profile PCIe x8 slot 4 on the system board and full-high PCIe x8 and x16 slots supplied by the riser cards 1 and 2.

For more information, see the list of Product Guides in the Host bus adapters category:
http://lenovopress.com/servers/options/hba#rt=product-guide

Cooling

The SR550 server supports up to four non-hot-swap system fans that provide N+1 cooling redundancy. Models with one processor include three system fans, and Models with two processors include four system fans.

The installation of a 2nd processor requires an extra cooling fan be installed. For CTO orders, fans are derived by the configurator. For field upgrades, 1st Gen Xeon processor option part numbers include this fan however 2nd Gen Xeon processor options do not included the fan and it must be ordered separately using the SR550 Fan Option Kit (4F17A12353).

Table 45. Cooling options

Part number	Feature code	Description	Maximum quantity
4F17A12353	AV0M	ThinkSystem SR550 Fan Option Kit (for 2nd Gen processors only) Contains 1 system fan	1
4XH7A08791	B31F	ThinkSystem SR650/SR550/SR590 M.2 Thermal Kit	1

Configuration notes:

- The ThinkSystem SR650/SR550/SR590 M.2 Thermal Kit (4XH7A08791) is required in the configurations with at least one M.2 5100, 5300 or 5400 SSD is installed in the server with 12x LFF drive bays.
- The M.2 SSD Thermal Kit is derived by the configurator if M.2 5100 or 5300 SSDs are selected in the initial configurations for server models with 12x LFF drive bays. For field upgrades, the M.2 SSD Thermal Kit should be purchased with M.2 5100 or 5300 drives for server models with 12x LFF drive bays.

Power supplies

The SR550 server supports up to two redundant power supplies and is capable of N+N redundancy depending on the configuration. A second power supply can be added to the models that come with one power supply.

The following table lists the power supply options.

Table 46. Power supplies

Part number	Feature code	Description	Maximum quantity
7N67A00882	AVV2	ThinkSystem 550W (230V/115V) Platinum Hot-Swap Power Supply	2
7N67A00883	AVV3	ThinkSystem 750W (230/115V) Platinum Hot-Swap Power Supply	2
7N67A00884	AVV4	ThinkSystem 750W (230V) Titanium Hot-Swap Power Supply	2
4P57A82020	BR1Y	ThinkSystem V1 750W (230Vac) Titanium Hot Swap Power Supply	2

Power supply options do not include a line cord. For server configurations, the inclusion of a power cord is model dependent. Configure-to-order models can be configured without power cords if desired.

General power supply rules are as follows:

- Minimum of 1 and maximum of 2 power supplies per system.
- If 2 are installed, power supplies must be identical.
- AC power supplies support AC (Worldwide) and HVDC (PRC only) power sources
- AC power supplies have a C14 connector. The -48V DC power supply has a Positronic PLB3W3M1000/AA connector.

Important: The Standalone Solution Configuration Tool (SSCT) and Lenovo Data Center Solution Configurator (DCSC) power supply selection rules allow a subset of possible configurations due to power restrictions. Configurations that cannot be built in SSCT or DCSC due to power restrictions may still be supported. To verify support and ensure that the right power supply is chosen for optimal performance, you should always validate your server configuration using the latest version of the Lenovo Capacity Planner:
http://datacentersupport.lenovo.com/us/en/solutions/lnvo-lcp

Power cords

Line cords and rack power cables with C13 connectors can be ordered as listed in the following table.

110V customers: If you plan to use the 1100W power supply with a 110V power source, select a power cable that is rated above 10A. Power cables that are rated at 10A or below are not supported with 110V power.

Table 47. Power cords

Part number	Feature code	Description
Rack cables - C13 to C14		
SL67B08593	BPHZ	0.5m, 10A/100-250V, C13 to C14 Jumper Cord
00Y3043	A4VP	1.0m, 10A/100-250V, C13 to IEC 320-C14 Rack Power Cable
4L67A08367	B0N5	1.0m, 13A/100-250V, C13 to C14 Jumper Cord
39Y7937	6201	1.5m, 10A/100-250V, C13 to IEC 320-C14 Rack Power Cable
4L67A08368	B0N6	1.5m, 13A/100-250V, C13 to C14 Jumper Cord

Part number	Feature code	Description
4L67A08365	B0N4	2.0m, 10A/100-250V, C13 to IEC 320-C14 Rack Power Cable
4L67A08369	6570	2.0m, 13A/100-250V, C13 to C14 Jumper Cord
4L67A08366	6311	2.8m, 10A/100-250V, C13 to IEC 320-C14 Rack Power Cable
4L67A08370	6400	2.8m, 13A/100-250V, C13 to C14 Jumper Cord
39Y7932	6263	4.3m, 10A/100-250V, C13 to IEC 320-C14 Rack Power Cable
4L67A08371	6583	4.3m, 13A/100-250V, C13 to C14 Rack Power Cable
Rack cables - C13 to C14 (Y-cable)		
00Y3046	A4VQ	1.345m, 2X C13 to C14 Jumper Cord, Rack Power Cable
00Y3047	A4VR	2.054m, 2X C13 to C14 Jumper Cord, Rack Power Cable
Rack cables - C13 to C20		
39Y7938	6204	2.8m, 10A/100-250V, C13 to IEC 320-C20 Rack Power Cable
Rack cables - C13 to C20 (Y-cable)		
47C2491	A3SW	1.2m, 16A/100-250V, 2 Short C13s to Short C20 Rack Power Cable
47C2492	A3SX	2.5m, 16A/100-250V, 2 Long C13s to Short C20 Rack Power Cable
47C2493	A3SY	2.8m, 16A/100-250V, 2 Short C13s to Long C20 Rack Power Cable
47C2494	A3SZ	4.1m, 16A/100-250V, 2 Long C13s to Long C20 Rack Power Cable
Line cords		
39Y7930	6222	2.8m, 10A/250V, C13 to IRAM 2073 (Argentina) Line Cord
81Y2384	6492	4.3m 10A/220V, C13 to IRAM 2073 (Argentina) Line Cord
39Y7924	6211	2.8m, 10A/250V, C13 to AS/NZ 3112 (Australia/NZ) Line Cord
81Y2383	6574	4.3m, 10A/230V, C13 to AS/NZS 3112 (Aus/NZ) Line Cord
69Y1988	6532	2.8m, 10A/250V, C13 to NBR 14136 (Brazil) Line Cord
81Y2387	6404	4.3m, 10A/250V, C13 - 2P+Gnd (Brazil) Line Cord
39Y7928	6210	2.8m, 220-240V, C13 to GB 2099.1 (China) Line Cord
81Y2378	6580	4.3m, 10A/220V, C13 to GB 2099.1 (China) Line Cord
39Y7918	6213	2.8m, 10A/250V, C13 to DK2-5a (Denmark) Line Cord
81Y2382	6575	4.3m, 10A/230V, C13 to DK2-5a (Denmark) Line Cord
39Y7917	6212	2.8m, 10A/230V, C13 to CEE7-VII (Europe) Line Cord
81Y2376	6572	4.3m, 10A/230V, C13 to CEE7-VII (Europe) Line Cord
39Y7927	6269	2.8m, 10A/250V, C13(2P+Gnd) (India) Line Cord
81Y2386	6567	4.3m, 10A/240V, C13 to IS 6538 (India) Line Cord
39Y7920	6218	2.8m, 10A/250V, C13 to SI 32 (Israel) Line Cord
81Y2381	6579	4.3m, 10A/230V, C13 to SI 32 (Israel) Line Cord
39Y7921	6217	2.8m, 220-240V, C13 to CEI 23-16 (Italy/Chile) Line Cord
81Y2380	6493	4.3m, 10A/230V, C13 to CEI 23-16 (Italy/Chile) Line Cord
46M2593	A1RE	2.8m, 12A/125V, C13 to JIS C-8303 (Japan) Line Cord
4L67A08362	6495	4.3m, 12A/200V, C13 to JIS C-8303 (Japan) Line Cord
39Y7926	6335	4.3m, 12A/100V, C13 to JIS C-8303 (Japan) Line Cord
39Y7922	6214	2.8m, 10A/250V, C13 to SABS 164 (S Africa) Line Cord
81Y2379	6576	4.3m, 10A/230V, C13 to SABS 164 (South Africa) Line Cord
39Y7925	6219	2.8m, 220-240V, C13 to KETI (S Korea) Line Cord

Part number	Feature code	Description
81Y2385	6494	4.3m, 12A/220V, C13 to KSC 8305 (S. Korea) Line Cord
39Y7919	6216	2.8m, 10A/250V, C13 to SEV 1011-S24507 (Swiss) Line Cord
81Y2390	6578	4.3m, 10A/230V, C13 to SEV 1011-S24507 (Sws) Line Cord
23R7158	6386	2.8m, 10A/125V, C13 to CNS 10917-3 (Taiwan) Line Cord
81Y2375	6317	2.8m, 10A/240V, C13 to CNS 10917-3 (Taiwan) Line Cord
81Y2374	6402	2.8m, 13A/125V, C13 to CNS 60799 (Taiwan) Line Cord
4L67A08363	AX8B	4.3m, 10A 125V, C13 to CNS 10917 (Taiwan) Line Cord
81Y2389	6531	4.3m, 10A/250V, C13 to 76 CNS 10917-3 (Taiwan) Line Cord
81Y2388	6530	4.3m, 13A/125V, C13 to CNS 10917 (Taiwan) Line Cord
39Y7923	6215	2.8m, 10A/250V, C13 to BS 1363/A (UK) Line Cord
81Y2377	6577	4.3m, 10A/230V, C13 to BS 1363/A (UK) Line Cord
90Y3016	6313	2.8m, 10A/120V, C13 to NEMA 5-15P (US) Line Cord
46M2592	A1RF	2.8m, 10A/250V, C13 to NEMA 6-15P Line Cord
00WH545	6401	2.8m, 13A/120V, C13 to NEMA 5-15P (US) Line Cord
4L67A08359	6370	4.3m, 10A/125V, C13 to NEMA 5-15P (US) Line Cord
4L67A08361	6373	4.3m, 10A/250V, C13 to NEMA 6-15P (US) Line Cord
4L67A08360	AX8A	4.3m, 13A/120V, C13 to NEMA 5-15P (US) Line Cord

Systems management

The SR550 supports the following systems management tools:

- Lenovo XClarity Controller
- Lenovo XClarity Provisioning Manager
- Lenovo XClarity Essentials
- Lenovo XClarity Administrator
- Lenovo XClarity Integrators
- Lenovo XClarity Energy Manager
- Lenovo Capacity Planner

Lenovo XClarity Controller

The SR550 server contains Lenovo XClarity Controller (XCC), which provides advanced service-processor control, monitoring, and alerting functions. XClarity Controller offers three functional levels: Standard, Advanced, and Enterprise. By default, the SR550 server includes XClarity Controller Standard features, and it can be upgraded to Advanced or Enterprise functionality by using the Features on Demand (FoD) upgrades.

XClarity Controller Standard offers the following capabilities:

- Gathering and viewing system information and inventory
- Monitoring system status and health
- Alerting and notifications
- Event logging
- Configuring network connectivity
- Configuring security
- Updating system firmware
- Configuring server settings and devices
- Real-time power usage monitoring
- Remotely controlling server power (Power on, Power off, Restart)

- Managing FoD activation keys
- Redirecting serial console via IPMI
- Capturing the video display contents when an operating system hang condition is detected

XClarity Controller Advanced Upgrade adds the following functionality to the Standard features:

- Remotely viewing video with the following graphics resolutions:
  - Up to 1600x1200 with up to 23 bits per pixel; or
  - Up to 1920x1200 with up to 15 bits per pixel
- Remotely accessing the server using the keyboard and mouse from a remote client
- Remotely deploying an operating system
- Syslog alerting
- Redirecting serial console via SSH
- Displaying graphics for real-time and historical power usage data and temperature

XClarity Controller Enterprise Upgrade adds the following functionality to the Advanced features:

- Capping power usage
- Mapping the ISO and image files located on the local client as virtual drives for use by the server
- Mounting the remote ISO and image files via HTTPS, SFTP, CIFS, and NFS
- Collaborating across up to six users of the virtual console
- Controlling quality and bandwidth usage

The XClarity Controller provides remote server management through industry-standard interfaces:

- Intelligent Platform Management Interface (IPMI) Version 2.0
- Simple Network Management Protocol (SNMP) Version 3
- Common Information Model (CIM)
- Data Center Manageability Interface (DCMI) Version 1.5
- Redfish REpresentational State Transfer (REST) API
- Web browser with HTML5 support
- Command-line interface
- Virtual Operator Panel with XClarity Mobile App via the front USB port with XClarity Controller access

Virtual Operator Panel provides quick access to system status, firmware, network, health, and alerts information. With proper authentication, it also allows to configure systems management and network settings and to control system power (Power on, Power off, Restart). The Virtual Operator Panel can be accessed from the XClarity Mobile App running on the Android or iOS mobile device that is connected to the front USB port with XClarity Controller access (See Components and connectors).

Note: Depending on the system settings, the front USB port can be assigned to XClarity Controller for management functions, or to the system as a regular USB 2.0 port, or switched between two functions by using the system ID button.

IPMI via the Ethernet port (IPMI over LAN) is supported, however it is disabled by default. For CTO orders you can specify whether you want to the feature enabled or disabled in the factory, using the feature codes listed in the following table.

Table 48. IPMI-over-LAN settings

Part number	Feature code	Description
CTO only	B7XZ	Disable IPMI-over-LAN (default)
CTO only	B7Y0	Enable IPMI-over-LAN

The following table lists the XClarity Controller FoD upgrades.

Table 49. XClarity Controller FoD upgrades

Description	Part number	Feature code	Maximum quantity
ThinkSystem XClarity Controller Standard to Advanced Upgrade	4L47A09132	AVUT	1
ThinkSystem XClarity Controller Standard to Enterprise Upgrade	None*	AUPW	1
ThinkSystem XClarity Controller Advanced to Enterprise Upgrade	4L47A09133	None**	1

* Factory-installed only.
** Field upgrade only.

Configuration notes:

- For factory-installed upgrades, either Standard to Advanced Upgrade (feature AVUT) or Standard to Enterprise Upgrade (feature AUPW) can be selected, but not both.
- For field upgrades, the Advanced to Enterprise Upgrade (4L47A09133) requires the Standard to Advanced Upgrade to be activated on the server previously with either the factory-installed feature AVUT or field upgrade 4L47A09132.

Lenovo XClarity Provisioning Manager

Lenovo XClarity Provisioning Manager (LXPM) is a UEFI-based application embedded in ThinkSystem servers and accessible via the F1 key during system boot.

LXPM provides the following functions:

- Graphical UEFI Setup
- System inventory information and VPD update
- System firmware updates (UEFI and XCC)
- RAID setup wizard
- OS installation wizard (including unattended OS installation)
- Diagnostics functions

Lenovo XClarity Essentials

Lenovo offers the following XClarity Essentials software tools that can help you set up, use, and maintain the server at no additional cost:

- Lenovo Essentials OneCLI

  OneCLI is a collection of server management tools that uses a command line interface program to manage firmware, hardware, and operating systems. It provides functions to collect full system health information (including health status), configure system settings, and update system firmware and drivers.

- Lenovo Essentials UpdateXpress

  The UpdateXpress tool is a standalone GUI application for firmware and device driver updates that enables you to maintain your server firmware and device drivers up-to-date and help you avoid unnecessary server outages. The tool acquires and deploys individual updates and UpdateXpress System Packs (UXSPs) which are integration-tested bundles.

- Lenovo Essentials Bootable Media Creator

  The Bootable Media Creator (BOMC) tool is used to create bootable media for offline firmware update.

For more information and downloads, visit the Lenovo XClarity Essentials web page:
http://support.lenovo.com/us/en/documents/LNVO-center

Lenovo XClarity Administrator

Lenovo XClarity Administrator is a centralized resource management solution designed to reduce complexity, speed response, and enhance the availability of Lenovo systems and solutions. It provides agent-free hardware management for ThinkSystem servers, in addition to ThinkServer, System x, and Flex System servers. The administration dashboard is based on HTML 5 and allows fast location of resources so tasks can be run quickly.

Because Lenovo XClarity Administrator does not require any agent software to be installed on the managed endpoints, there are no CPU cycles spent on agent execution, and no memory is used, which means that up to 1GB of RAM and 1 - 2% CPU usage is saved, compared to a typical managed system where an agent is required.

Lenovo XClarity Administrator is an optional software component for the SR550. The software can be downloaded and used at no charge to discover and monitor the SR550 and to manage firmware upgrades.

If software support is required for Lenovo XClarity Administrator, or premium features such as configuration management and operating system deployment are required, Lenovo XClarity Pro software subscription should be ordered. Lenovo XClarity Pro is licensed on a per managed system basis, that is, each managed Lenovo system requires a license.

The following table lists the Lenovo XClarity software license options.

Table 50. Lenovo XClarity Pro ordering information

Part number	Feature code	Description
00MT201	1339	Lenovo XClarity Pro, per Managed Endpoint w/1 Yr SW S&S
00MT202	1340	Lenovo XClarity Pro, per Managed Endpoint w/3 Yr SW S&S
00MT203	1341	Lenovo XClarity Pro, per Managed Endpoint w/5 Yr SW S&S
7S0X000HWW	SAYV	Lenovo XClarity Pro, per Managed Endpoint w/6 Yr SW S&S
7S0X000JWW	SAYW	Lenovo XClarity Pro, per Managed Endpoint w/7 Yr SW S&S

Lenovo XClarity Administrator offers the following standard features that are available at no charge:

- Auto-discovery and monitoring of Lenovo systems
- Firmware updates and compliance enforcement
- External alerts and notifications via SNMP traps, syslog remote logging, and e-mail
- Secure connections to managed endpoints
- NIST 800-131A or FIPS 140-2 compliant cryptographic standards between the management solution and managed endpoints
- Integration into existing higher-level management systems such as cloud automation and orchestration tools through REST APIs, providing extensive external visibility and control over hardware resources
- An intuitive, easy-to-use GUI
- Scripting with Windows PowerShell, providing command-line visibility and control over hardware resources

Lenovo XClarity Administrator offers the following premium features that require an optional Pro license:

- Pattern-based configuration management that allows to define configurations once and apply repeatedly without errors when deploying new servers or redeploying existing servers without disrupting the fabric
- Bare-metal deployment of operating systems and hypervisors to streamline infrastructure provisioning

For more information, refer to the Lenovo XClarity Administrator Product Guide:
http://lenovopress.com/tips1200

Lenovo XClarity Integrators

Lenovo also offers software plug-in modules, Lenovo XClarity Integrators, to manage physical infrastructure from leading external virtualization management software tools including those from Microsoft and VMware.

These integrators are offered at no charge, however if software support is required, a Lenovo XClarity Pro software subscription license should be ordered.

Lenovo XClarity Integrators offer the following additional features:

- Ability to discover, manage, and monitor Lenovo server hardware from VMware vCenter or Microsoft System Center
- Deployment of firmware updates and configuration patterns to Lenovo x86 rack servers and Flex System from the virtualization management tool
- Non-disruptive server maintenance in clustered environments that reduces workload downtime by dynamically migrating workloads from affected hosts during rolling server updates or reboots
- Greater service level uptime and assurance in clustered environments during unplanned hardware events by dynamically triggering workload migration from impacted hosts when impending hardware failures are predicted

For more information about all the available Lenovo XClarity Integrators, see the Lenovo XClarity Administrator Product Guide: https://lenovopress.com/tips1200-lenovo-xclarity-administrator

Lenovo XClarity Energy Manager

Lenovo XClarity Energy Manager (LXEM) is a power and temperature management solution for data centers. It is an agent-free, web-based console that enables you to monitor and manage power consumption and temperature in your data center through the management console. It enables server density and data center capacity to be increased through the use of power capping.

LXEM is a licensed product. A single-node LXEM license is included with the XClarity Controller Enterprise upgrade as described in the Remote Management section. If your server does not have the XCC Enterprise upgrade, Energy Manager licenses can be ordered as shown in the following table.

Table 51. Lenovo XClarity Energy Manager

Part number	Description
4L40E51621	Lenovo XClarity Energy Manager Node License (1 license needed per server)

For more information about XClarity Energy Manager, see the following resources:

- Lenovo Support page:
https://datacentersupport.lenovo.com/us/en/solutions/lnvo-lxem
- Lenovo Information Center:
https://sysmgt.lenovofiles.com/help/topic/LXEM/lxem_overview.html?cp=4

Lenovo Capacity Planner

Lenovo Capacity Planner is a power consumption evaluation tool that enhances data center planning by enabling IT administrators and pre-sales professionals to understand various power characteristics of racks, servers, and other devices. Capacity Planner can dynamically calculate the power consumption, current, British Thermal Unit (BTU), and volt-ampere (VA) rating at the rack level, improving the planning efficiency for large scale deployments.

For more information, refer to the Capacity Planner web page:
http://datacentersupport.lenovo.com/us/en/solutions/lnvo-lcp

Security

The SR550 server offers the following security features:

- Power-on password
- Administrator's password
- Secure firmware updates
- Onboard Trusted Platform Module (TPM) version 1.2 or 2.0 (configurable UEFI system setting)
- Trusted Cryptographic Module (TCM) (optional; available in PRC only)
- Nationz Trusted Platform Module v2.0 (optional; available in PRC only)
- Lockable front bezel (optional)
- Self-encrypting drives (SEDs) with support for enterprise key managers - see the SED encryption key management section
- Lenovo Business Vantage security software (optional; available in PRC only)

The server is NIST SP 800-147B compliant.

The following table lists the security options that are available for the SR550 server.

Table 52. Security options

Part number	Feature code	Description	Maximum quantity
Lockable front bezel			
7Z17A02580	AURX	ThinkSystem 2U Security Bezel	1
Trusted Cryptographic Module (PRC only)			
None*	AVKE	ThinkSystem Trusted Cryptographic Module	1
Trusted Platform Module (PRC only)			
None*	B22N	ThinkSystem Nationz Trusted Platform Module v2.0	1

* Factory-installed only; no field upgrade.

Lenovo Business Vantage is a security software tool suite (available only in PRC) designed to work with the TCM for enhanced security, to keep user data safe, and to erase confidential data completely from a drive.

Lenovo Business Vantage provides the following features:

- Encrypts files to ensure data safety by using the TCM
- Erases confidential data from a hard disk.
- Prohibits unauthorized access to the USB port of devices.
- Encrypts files to ensure data security on a USB storage device.

Intel Transparent Supply Chain

Add a layer of protection in your data center and have peace of mind that the server hardware you bring into it is safe authentic and with documented, testable, and provable origin.

Lenovo has one of the world’s best supply chains, as ranked by Gartner Group, backed by extensive and mature supply chain security programs that exceed industry norms and US Government standards. Now we are the first Tier 1 manufacturer to offer Intel® Transparent Supply Chain in partnership with Intel, offering you an unprecedented degree of supply chain transparency and assurance.

To enable Intel Transparent Supply Chain for the Intel-based servers in your order, add the following feature code in the DCSC configurator, under the Security tab.

Table 53. Intel Transparent Supply Chain ordering information

Feature code	Description
BB0P	Intel Transparent Supply Chain

For more information on this offering, see the paper *Introduction to Intel Transparent Supply Chain on Lenovo ThinkSystem Servers*, available from https://lenovopress.com/lp1434-introduction-to-intel-transparent-supply-chain-on-thinksystem-servers.

Rack installation

The following table lists the rack installation options that are available for the SR550 server.

Table 54. Rack installation options

Part number	Feature code	Description	Maximum quantity
4-post rail kits			
7M27A05702	AXCA	ThinkSystem Tool-less Slide Rail	1
7M27A05700	AXCH	ThinkSystem Tool-less Slide Rail Kit with 2U CMA	1
4M17A07274	AXFN	ThinkSystem Screw-in Slide Rail	1
4M17A07280	B0TD	ThinkSystem Screw-in Slide Rail Kit with 2U CMA	1
4M17A07273	BK7W	ThinkSystem Toolless Friction Rail v2	1
Cable management arm (CMA) upgrade			
7M27A05698	None^	ThinkSystem 2U CMA Upgrade Kit for Tool-less Slide Rail	1*
4M17A07275	AXFU	ThinkSystem 2U CMA Upgrade Kit for Screw-in Slide Rail	1**
Front VGA port			
4XH7A83033	BMNL	ThinkSystem SR550/SR590/SR650 EIA Latch w/ VGA Upgrade Kit v2	1
7Z17A02578	AUS8	ThinkSystem 2U EIA Latch w/ VGA Upgrade Kit	1

^ Field upgrade only.
* The CMA Upgrade Kit for Tool-less Slide Rail is supported with the Tool-less Slide Rail (7M27A05702) only.
** The CMA Upgrade Kit for Screw-in Slide Rail is supported with the Screw-in Slide Rail (4M17A07274) only.

The following table summarizes the rail kit features and specifications.

Table 55. Rail kit features and specifications summary

Feature	Tool-less Slide Rail		Screw-in Slide Rail		Tool-less Friction Rail
	Without CMA	With CMA	Without CMA	With CMA	
Part number	7M27A05702	7M27A05700	4M17A07274	4M17A07280	4M17A07273
CMA	7M27A05698	Included	4M17A07275	Included	No support
Rail length	730 mm (28.74 in.)	807 mm (31.8 in.)	836.8 mm (32.9 in.)	836.8 mm (32.9 in.)	728.1 mm (28.7 in.)
Rail type	Full-out slide (ball bearing)		Full-out slide (ball bearing)		Half-out slide (friction)
Tool-less installation	Yes		No		Yes
In-rack server maintenance	Yes		Yes		No

Feature	Tool-less Slide Rail		Screw-in Slide Rail		Tool-less Friction Rail
	Without CMA	With CMA	Without CMA	With CMA	
1U PDU support	Yes		Yes		Yes
0U PDU support	Limited*		Limited*		Limited**
Rack type	IBM and Lenovo 4-post, IEC standard-compliant		IBM and Lenovo 4-post, IEC standard-compliant		IBM and Lenovo 4-post, IEC standard-compliant
Mounting holes	Square or round		Square, round, or threaded		Square or round
Mounting flange thickness	2 mm (0.08 in.) – 3.3 mm (0.13 in.)		2 mm (0.08 in.) – 3.3 mm (0.13 in.)		2 mm (0.08 in.) – 3.3 mm (0.13 in.)
Distance between front and rear mounting flanges^	609.6 mm (24 in.) – 863.6 mm (34 in.)		609.6 mm (24 in.) – 812.8 mm (32 in.)		609.6 mm (24 in.) – 863.6 mm (34 in.)

* If a 0U PDU is used, the rack cabinet must be at least 1100 mm (43.31 in.) deep if no CMA is used, or at least 1200 mm (47.24 in.) deep if a CMA is used.
** If a 0U PDU used, the rack must be at least 1000 mm (39.37 in.) deep.
^ Measured when mounted on the rack, from the front surface of the front mounting flange to the rear most point of the rail.

Operating system support

The server with 2nd Gen processors supports the following operating systems:

- Microsoft Windows Server 2016
- Microsoft Windows Server 2019
- Microsoft Windows Server 2022
- Red Hat Enterprise Linux 7.6
- Red Hat Enterprise Linux 7.7
- Red Hat Enterprise Linux 7.8
- Red Hat Enterprise Linux 7.9
- Red Hat Enterprise Linux 8.0
- Red Hat Enterprise Linux 8.1
- Red Hat Enterprise Linux 8.2
- Red Hat Enterprise Linux 8.3
- Red Hat Enterprise Linux 8.4
- Red Hat Enterprise Linux 8.5
- Red Hat Enterprise Linux 8.6
- Red Hat Enterprise Linux 8.7
- Red Hat Enterprise Linux 8.8
- Red Hat Enterprise Linux 9.0
- Red Hat Enterprise Linux 9.1
- Red Hat Enterprise Linux 9.2
- SUSE Linux Enterprise Server 12 SP4
- SUSE Linux Enterprise Server 12 SP5
- SUSE Linux Enterprise Server 12 Xen SP4
- SUSE Linux Enterprise Server 12 Xen SP5
- SUSE Linux Enterprise Server 15
- SUSE Linux Enterprise Server 15 SP1
- SUSE Linux Enterprise Server 15 SP2
- SUSE Linux Enterprise Server 15 SP3
- SUSE Linux Enterprise Server 15 SP4
- SUSE Linux Enterprise Server 15 SP5
- SUSE Linux Enterprise Server 15 Xen
- SUSE Linux Enterprise Server 15 Xen SP1
- SUSE Linux Enterprise Server 15 Xen SP2
- SUSE Linux Enterprise Server 15 Xen SP3

- SUSE Linux Enterprise Server 15 Xen SP4
- SUSE Linux Enterprise Server 15 Xen SP5
- Ubuntu 22.04 LTS 64-bit
- VMware ESXi 6.5 U2
- VMware ESXi 6.5 U3
- VMware ESXi 6.7 U1
- VMware ESXi 6.7 U2
- VMware ESXi 6.7 U3
- VMware ESXi 7.0
- VMware ESXi 7.0 U1
- VMware ESXi 7.0 U2
- VMware ESXi 7.0 U3
- VMware ESXi 8.0
- VMware ESXi 8.0 U1
- VMware ESXi 8.0 U2

The server with 1st Gen processors supports the following operating systems:

- Microsoft Windows Server 2012 R2
- Microsoft Windows Server 2016
- Microsoft Windows Server 2019
- Microsoft Windows Server 2022
- Microsoft Windows Server, version 1709
- Red Hat Enterprise Linux 6.10 x64
- Red Hat Enterprise Linux 6.9 x64
- Red Hat Enterprise Linux 7.3
- Red Hat Enterprise Linux 7.4
- Red Hat Enterprise Linux 7.5
- Red Hat Enterprise Linux 7.6
- Red Hat Enterprise Linux 7.7
- Red Hat Enterprise Linux 7.8
- Red Hat Enterprise Linux 7.9
- Red Hat Enterprise Linux 8.0
- Red Hat Enterprise Linux 8.1
- Red Hat Enterprise Linux 8.2
- Red Hat Enterprise Linux 8.3
- Red Hat Enterprise Linux 8.4
- Red Hat Enterprise Linux 8.5
- Red Hat Enterprise Linux 8.6
- Red Hat Enterprise Linux 8.7
- Red Hat Enterprise Linux 8.8
- Red Hat Enterprise Linux 9.0
- Red Hat Enterprise Linux 9.1
- Red Hat Enterprise Linux 9.2
- SUSE Linux Enterprise Server 11 Xen x64 SP4
- SUSE Linux Enterprise Server 11 x64 SP4
- SUSE Linux Enterprise Server 12 SP2
- SUSE Linux Enterprise Server 12 SP3
- SUSE Linux Enterprise Server 12 SP4
- SUSE Linux Enterprise Server 12 SP5
- SUSE Linux Enterprise Server 12 Xen SP2
- SUSE Linux Enterprise Server 12 Xen SP3
- SUSE Linux Enterprise Server 12 Xen SP4
- SUSE Linux Enterprise Server 12 Xen SP5
- SUSE Linux Enterprise Server 15
- SUSE Linux Enterprise Server 15 SP1
- SUSE Linux Enterprise Server 15 SP2

- SUSE Linux Enterprise Server 15 SP3
- SUSE Linux Enterprise Server 15 SP4
- SUSE Linux Enterprise Server 15 SP5
- SUSE Linux Enterprise Server 15 Xen
- SUSE Linux Enterprise Server 15 Xen SP1
- SUSE Linux Enterprise Server 15 Xen SP2
- SUSE Linux Enterprise Server 15 Xen SP3
- SUSE Linux Enterprise Server 15 Xen SP4
- SUSE Linux Enterprise Server 15 Xen SP5
- Ubuntu 22.04 LTS 64-bit
- VMware ESXi 6.0 U3
- VMware ESXi 6.5
- VMware ESXi 6.5 U1
- VMware ESXi 6.5 U2
- VMware ESXi 6.5 U3
- VMware ESXi 6.7
- VMware ESXi 6.7 U1
- VMware ESXi 6.7 U2
- VMware ESXi 6.7 U3
- VMware ESXi 7.0
- VMware ESXi 7.0 U1
- VMware ESXi 7.0 U2
- VMware ESXi 7.0 U3
- VMware ESXi 8.0
- VMware ESXi 8.0 U1
- VMware ESXi 8.0 U2

For a complete list of supported, certified and tested operating systems, plus additional details and links to relevant web sites, see the Operating System Interoperability Guide:
https://lenovopress.com/osig#servers=sr550-7x03-7x04-sp-gen-2

For configure-to-order configurations, the server can be preloaded with VMware ESXi installed on M.2 cards. Ordering information is listed in the following table.

Table 56. VMware ESXi preload

Part number	Feature code	Description
CTO only	B3VW	VMware ESXi 6.5 U2 (Factory Installed)
CTO only	B6U0	VMware ESXi 6.5 U3 (factory installed)
CTO only	B3VX	VMware ESXi 6.7 (Factory Installed)
CTO only	B4XA	VMware ESXi 6.7 U1 (Factory Installed)
CTO only	B6U1	VMware ESXi 6.7 U2 (factory installed)
CTO only	B88T	VMware ESXi 6.7 U3 (factory installed)
CTO only	BBZG	VMware ESXi 7.0 (Factory Installed)
CTO only	BE5E	VMware ESXi 7.0 U1 (Factory Installed)
CTO only	BHSR	VMware ESXi 7.0 U2 (Factory Installed)
CTO only	BMEY	VMware ESXi 7.0 U3 (Factory Installed)
CTO only	BMT5	VMware ESXi 8.0 (Factory Installed)
CTO only	BQ8S	VMware ESXi 8.0 U1 (Factory Installed)

Physical and electrical specifications

The SR550 has the following overall physical dimensions, excluding components that extend outside the standard chassis, such as EIA flanges, front security bezel (if any), and power supply handles:

- Width: 445 mm (17.5 inches)
- Height: 87 mm (3.4 inches)
- Depth: 764 mm (30.1 inches)

The following table lists the detailed dimensions. See the figure below for the definition of each dimension.

Table 57. Detailed dimensions

Dimension	Description
482 mm	X_a = Width, to the outsides of the front EIA flanges
435 mm	X_b = Width, to the rack rail mating surfaces
445 mm	X_c = Width, to the outer most chassis body feature
87 mm	Y_a = Height, from the bottom of chassis to the top of the chassis
698 mm	Z_a = Depth, from the rack flange mating surface to the rearmost I/O port surface
730 mm	Z_b = Depth, from the rack flange mating surface to the rearmost feature of the chassis body
727 mm	Z_c = Depth, from the rack flange mating surface to the rearmost feature such as power supply handle
34 mm	Z_d = Depth, from the forwardmost feature on front of EIA flange to the rack flange mating surface
47 mm	Z_e = Depth, from the front of security bezel (if applicable) or forwardmost feature to the rack flange mating surface

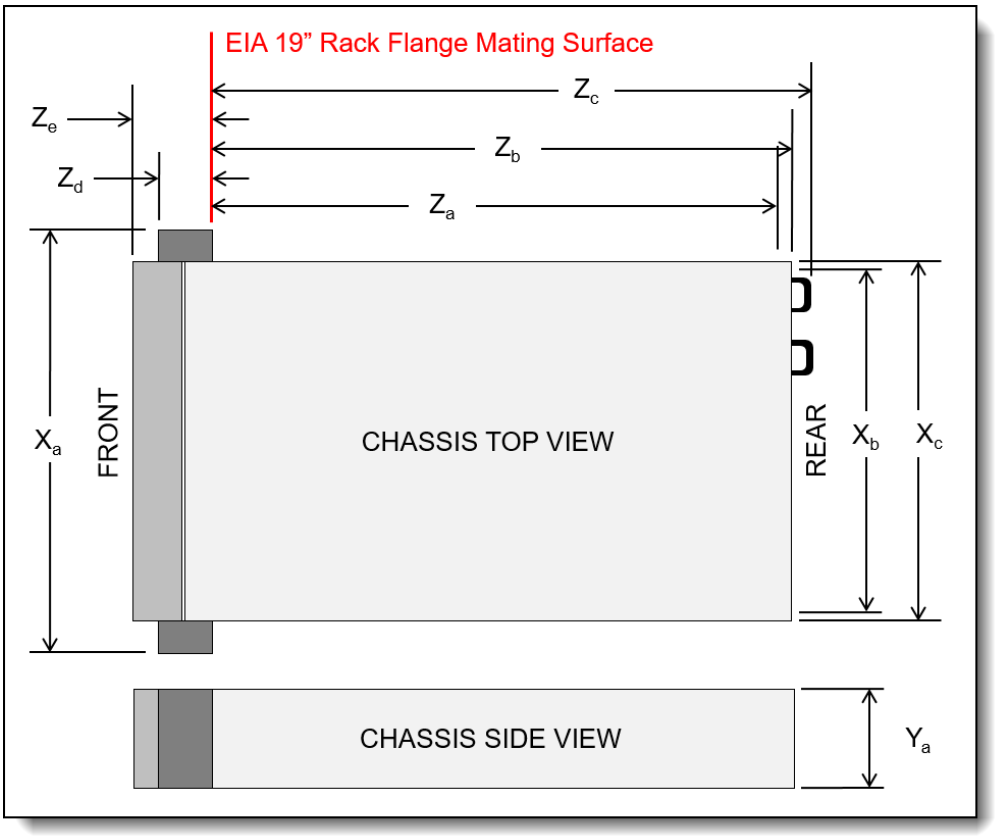

Figure 9. Server dimensions

The shipping dimensions (cardboard packaging) of the SR550 are as follows:

- Width: 592 mm (23.3 inches)
- Height: 282 mm (11.1 inches)
- Depth: 992 mm (39.1 inches)

The SR550 server has the following weight:

- Minimum configuration: 19 kg (41.9 lb)
- Maximum configuration: 26 kg (57.3 lb)

Electrical specifications for AC power supplies:

- 100 - 127 (nominal) V AC; 50 Hz / 60 Hz
- 200 - 240 (nominal) V AC; 50 Hz / 60 Hz
- 180 - 300 V DC (HVDC; supported in PRC only)

Power load and inlet current

The following table lists the maximum system power load, rated inlet current, and system heat output based on the power supply and source voltage.

Table 58. Rated system power, inlet current, and system heat output

Power supply	Source voltage	Maximum power load per system (two power supplies)	Rated current per inlet	System heat output
550 W Platinum	100 - 127 V AC	722 W	6.2 A	2463 BTU/hour
	200 - 240 V AC	704 W	3 A	2402 BTU/hour
	180 - 300 V DC	702 W	2.5 A	2395 BTU/hour
750 W Platinum	100 - 127 V AC	984 W	8.4 A	3357 BTU/hour
	200 - 240 V AC	958 W	4.1 A	3269 BTU/hour
	180 - 300 V DC	958 W	3.5 A	3269 BTU/hour
750 W Titanium	200 - 240 V AC	949 W	4.1 A	3238 BTU/hour
	180 - 300 V DC	948 W	3.5 A	3235 BTU/hour

Operating environment

The SR550 server complies with ASHRAE class A2 specifications. The server performance might be impacted when the operating temperature is outside the ASHRAE A2 specifications. Some server models comply with ASHRAE class A3 and class A4 specifications, provided they meet the following hardware configuration requirements at the same time:

- Two power supplies installed
- No system fan failure

Temperature and humidity

The SR550 server is supported in the following environment:

- Air temperature:
  - Operating:
    - ASHRAE Class A4: 5 °C - 45 °C (41 °F - 113 °F); for altitudes above 900 m (2,953 ft), decrease the maximum ambient temperature by 1 °C for every 125-m (410-ft) increase in altitude
    - ASHRAE Class A3: 5 °C - 40 °C (41 °F - 104 °F); for altitudes above 900 m (2,953 ft), decrease the maximum ambient temperature by 1 °C for every 175-m (574-ft) increase in altitude
    - ASHRAE Class A2: 10 °C - 35 °C (50 °F - 95 °F); for altitudes above 900 m (2,953 ft), decrease the maximum ambient temperature by 1 °C for every 300-m (984-ft) increase in altitude
  - Non-operating: 5 °C - 45 °C (41 °F - 113 °F)
  - Storage: -40 °C - +60 °C (-40 °F - 140 °F)
- Maximum altitude: 3,050 m (10,000 ft)
- Humidity:
  - Operating:
    - ASHRAE Class A4: 8% - 90% (non-condensing); maximum dew point: 24 °C (75 °F)
    - ASHRAE Class A3: 8% - 85% (non-condensing); maximum dew point: 24 °C (75 °F)
    - ASHRAE Class A2: 8% - 80% (non-condensing); maximum dew point: 21 °C (70 °F)
  - Storage: 8% - 90% (non-condensing)

Acoustic noise emissions

The server has the following acoustic noise emissions declaration:

- Minimum configuration:
  - Operating: 4.9 bels
  - Idle: 4.9 bels
- Maximum configuration:
  - Operating: 6.2 bels
  - Idle: 6.1 bels

Shock and vibration

The server has the following vibration and shock limits:

- Vibration:
  - Operating: 0.21 G rms at 5 Hz to 500 Hz for 15 minutes across 3 axes
  - Non-operating: 1.04 G rms at 2 Hz to 200 Hz for 15 minutes across 6 surfaces
- Shock:
  - Operating: 15 G for 3 milliseconds in each direction (positive and negative X, Y, and Z axes)
  - Non-operating:
    - 12 kg - 22 kg: 50 G for 152 in./sec velocity change across 6 surfaces
    - 23 kg - 31 kg: 35 G for 152 in./sec velocity change across 6 surfaces

Particulate contamination

Airborne particulates (including metal flakes or particles) and reactive gases acting alone or in combination with other environmental factors such as humidity or temperature might damage the system that might cause the system to malfunction or stop working altogether.

The following specifications indicate the limits of particulates that the system can tolerate:

- Reactive gases:
  - The reactivity rate of copper coupons shall be less than 200 Angstroms per month (Å/month)
  - The reactivity rate of silver coupons shall be less than 200 Å/month

- Airborne particulates:
  - The room air should be continuously filtered with MERV 8 filters.
  - Air entering a data center should be filtered with MERV 11 or preferably MERV 13 filters.
  - The deliquescent relative humidity of the particulate contamination should be more than 60% RH
  - Data centers must be free of zinc whiskers

For additional information, see the Specifications section of the Setup Guide for the server, available from the Lenovo Documents site, https://pubs.lenovo.com/

Warranty and support

The SR550 has a 1-year or 3-year warranty based on the machine type of the system:

- 7X03 - 1 year warranty
- 7X04 - 3 year warranty

The standard warranty terms are customer-replaceable unit (CRU) and onsite (for field-replaceable units FRUs only) with standard call center support during normal business hours and 9x5 Next Business Day Parts Delivered.

Lenovo's additional support services provide a sophisticated, unified support structure for your data center, with an experience consistently ranked number one in customer satisfaction worldwide. Available offerings include:

- **Premier Support**

  Premier Support provides a Lenovo-owned customer experience and delivers direct access to technicians skilled in hardware, software, and advanced troubleshooting, in addition to the following:

  - Direct technician-to-technician access through a dedicated phone line
  - 24x7x365 remote support
  - Single point of contact service
  - End to end case management
  - Third-party collaborative software support
  - Online case tools and live chat support
  - On-demand remote system analysis
- **Warranty Upgrade (Preconfigured Support)**

  Services are available to meet the on-site response time targets that match the criticality of your systems.

  - 3, 4, or 5 years of service coverage
  - 1-year or 2-year post-warranty extensions
  - **Foundation Service**: 9x5 service coverage with next business day onsite response. YourDrive YourData is an optional extra (see below).
  - **Essential Service:** 24x7 service coverage with 4-hour onsite response or 24-hour committed repair (available only in select markets). Bundled with YourDrive YourData.
  - **Advanced Service:** 24x7 service coverage with 2-hour onsite response or 6-hour committed repair (available only in select markets). Bundled with YourDrive YourData.

- **Managed Services**

  Lenovo Managed Services provides continuous 24x7 remote monitoring (plus 24x7 call center availability) and proactive management of your data center using state-of-the-art tools, systems, and practices by a team of highly skilled and experienced Lenovo services professionals.

  Quarterly reviews check error logs, verify firmware & OS device driver levels, and software as needed. We'll also maintain records of latest patches, critical updates, and firmware levels, to ensure you systems are providing business value through optimized performance.

- **Technical Account Management (TAM)**

  A Lenovo Technical Account Manager helps you optimize the operation of your data center based on a deep understanding of your business. You gain direct access to your Lenovo TAM, who serves as your single point of contact to expedite service requests, provide status updates, and furnish reports to track incidents over time. In addition, your TAM will help proactively make service recommendations and manage your service relationship with Lenovo to make certain your needs are met.

- **Enterprise Server Software Support**

  Enterprise Software Support is an additional support service providing customers with software support on Microsoft, Red Hat, SUSE, and VMware applications and systems. Around the clock availability for critical problems plus unlimited calls and incidents helps customers address challenges fast, without incremental costs. Support staff can answer troubleshooting and diagnostic questions, address product comparability and interoperability issues, isolate causes of problems, report defects to software vendors, and more.

- **YourDrive YourData**

  Lenovo's YourDrive YourData is a multi-drive retention offering that ensures your data is always under your control, regardless of the number of drives that are installed in your Lenovo server. In the unlikely event of a drive failure, you retain possession of your drive while Lenovo replaces the failed drive part. Your data stays safely on your premises, in your hands. The YourDrive YourData service can be purchased in convenient bundles and is optional with Foundation Service. It is bundled with Essential Service and Advanced Service.

- **Health Check**

  Having a trusted partner who can perform regular and detailed health checks is central to maintaining efficiency and ensuring that your systems and business are always running at their best. Health Check supports Lenovo-branded server, storage, and networking devices, as well as select Lenovo-supported products from other vendors that are sold by Lenovo or a Lenovo-Authorized Reseller.

Examples of region-specific warranty terms are second or longer business day parts delivery or parts-only base warranty.

If warranty terms and conditions include onsite labor for repair or replacement of parts, Lenovo will dispatch a service technician to the customer site to perform the replacement. Onsite labor under base warranty is limited to labor for replacement of parts that have been determined to be field-replaceable units (FRUs). Parts that are determined to be customer-replaceable units (CRUs) do not include onsite labor under base warranty.

If warranty terms include parts-only base warranty, Lenovo is responsible for delivering only replacement parts that are under base warranty (including FRUs) that will be sent to a requested location for self-service. Parts-only service does not include a service technician being dispatched onsite. Parts must be changed at customer's own cost and labor and defective parts must be returned following the instructions supplied with the spare parts.

Lenovo Service offerings are region-specific. Not all preconfigured support and upgrade options are available in every region. For information about Lenovo service upgrade offerings that are available in your region, refer to the following resources:

- Service part numbers in Lenovo Data Center Solution Configurator (DCSC):
  http://dcsc.lenovo.com/#/services
- Lenovo Services Availability Locator
  http://lenovolocator.com/

For service definitions, region-specific details, and service limitations, please refer to the following documents:

- Lenovo Statement of Limited Warranty for Infrastructure Solutions Group (ISG) Servers and System Storage
  http://pcsupport.lenovo.com/us/en/solutions/ht503310
- Lenovo Data Center Services Agreement
  http://support.lenovo.com/us/en/solutions/ht116628

Services

Lenovo Services is a dedicated partner to your success. Our goal is to reduce your capital outlays, mitigate your IT risks, and accelerate your time to productivity.

Note: Some service options may not be available in all markets or regions. For more information, go to https://www.lenovo.com/services. For information about Lenovo service upgrade offerings that are available in your region, contact your local Lenovo sales representative or business partner.

Here's a more in-depth look at what we can do for you:

- **Asset Recovery Services**

  Asset Recovery Services (ARS) helps customers recover the maximum value from their end-of-life equipment in a cost-effective and secure way. On top of simplifying the transition from old to new equipment, ARS mitigates environmental and data security risks associated with data center equipment disposal. Lenovo ARS is a cash-back solution for equipment based on its remaining market value, yielding maximum value from aging assets and lowering total cost of ownership for your customers. For more information, see the ARS page, https://lenovopress.com/lp1266-reduce-e-waste-and-grow-your-bottom-line-with-lenovo-ars.

- **Assessment Services**

  An Assessment helps solve your IT challenges through an onsite, multi-day session with a Lenovo technology expert. We perform a tools-based assessment which provides a comprehensive and thorough review of a company's environment and technology systems. In addition to the technology based functional requirements, the consultant also discusses and records the non-functional business requirements, challenges, and constraints. Assessments help organizations like yours, no matter how large or small, get a better return on your IT investment and overcome challenges in the ever-changing technology landscape.

- **Design Services**

  Professional Services consultants perform infrastructure design and implementation planning to support your strategy. The high-level architectures provided by the assessment service are turned into low level designs and wiring diagrams, which are reviewed and approved prior to implementation. The implementation plan will demonstrate an outcome-based proposal to provide business capabilities through infrastructure with a risk-mitigated project plan.

- **Basic Hardware Installation**

  Lenovo experts can seamlessly manage the physical installation of your server, storage, or networking hardware. Working at a time convenient for you (business hours or off shift), the technician will unpack and inspect the systems on your site, install options, mount in a rack cabinet, connect to power and network, check and update firmware to the latest levels, verify operation, and dispose of the packaging, allowing your team to focus on other priorities.

- **Deployment Services**

  When investing in new IT infrastructures, you need to ensure your business will see quick time to value with little to no disruption. Lenovo deployments are designed by development and engineering teams who know our Products & Solutions better than anyone else, and our technicians own the process from delivery to completion. Lenovo will conduct remote preparation and planning, configure & integrate systems, validate systems, verify and update appliance firmware, train on administrative tasks, and provide post-deployment documentation. Customer's IT teams leverage our skills to enable IT staff to transform with higher level roles and tasks.

- **Integration, Migration, and Expansion Services**

  Move existing physical & virtual workloads easily, or determine technical requirements to support increased workloads while maximizing performance. Includes tuning, validation, and documenting ongoing run processes. Leverage migration assessment planning documents to perform necessary migrations.

Regulatory compliance

The ThinkSystem SR550 server conforms to the following regulations:

- United States: FCC Part 15, Class A; UL 60950-1
- Canada: ICES-003/NMB-03, Class A; CAN/CSA-C22.2 60950-1
- Mexico: NOM-19
- Argentina: IEC60950-1
- European Union: CE Mark (EN55022 Class A, IEC/EN60950-1, EN55024, EN61000-3-2, EN61000-3-3)
- Germany: TUV-GS (IEC/EN 60950-1, EK1-ITB2000)
- Russia, Kazakhstan, Belarus: EAC (TR CU 004/2011, TR CU 020/2011)
- China: CCC GB4943.1, GB9254 Class A, GB17625.1
- India: BIS
- Japan: VCCI, Class A
- Taiwan: BSMI CNS13438, Class A; CNS14336-1
- Korea: KN22, Class A; KN24
- Australia/New Zealand: AS/NZS CISPR 22 Class A
- Reduction of Hazardous Substances (ROHS)
- Energy Star 3.0 (excluding configurations with Bronze 3204, Gold 5222, or Platinum 8256 processors)

Note: For more information on the Energy Star 3.0 certification, refer to the *Energy Star 3.0 Certifications fo ThinkSystem Servers* publication:
http://lenovopress.com/lp1230

External drive enclosures

The server supports attachment to external drive enclosures using a RAID controller with external ports or a SAS host bus adapter. Adapters supported by the server are listed in the SAS adapters for external storage section.

Note: Information provided in this section is for ordering reference purposes only. For the operating system and adapter support details, refer to the interoperability matrix for a particular storage enclosure that can be found on the Lenovo Data Center Support web site:
http://datacentersupport.lenovo.com

Table 59. External drive enclosures

Model	Description
4587HC1	Lenovo Storage D1212 Disk Expansion Enclosure (2U enclosure wth 12x LFF drive bays)
4587HC2	Lenovo Storage D1224 Disk Expansion Enclosure (2U enclosure wth 24x SFF drive bays)
6413HC1	Lenovo Storage D3284 High Density Expansion Enclosure (5U enclosure wth 84x LFF drive bays)
7DAHCTO1WW	Lenovo ThinkSystem D4390 Direct Attached Storage (4U enclosure wth 90x LFF drive bays)

For details about supported drives, adapters, and cables, see the following Lenovo Press Product Guides:

- Lenovo Storage D1212 and D1224
  http://lenovopress.lenovo.com/lp0512
- Lenovo Storage D3284
  http://lenovopress.lenovo.com/lp0513
- Lenovo ThinkSystem D4390
  https://lenovopress.lenovo.com/lp1681

External storage systems

Lenovo offers the ThinkSystem DE Series and ThinkSystem DM Series external storage systems for high-performance storage. See the DE Series and DM Series product guides for specific controller models, expansion enclosures and configuration options:

- ThinkSystem DE Series Storage
  https://lenovopress.com/storage/thinksystem/de-series#rt=product-guide
- ThinkSystem DM Series Storage
  https://lenovopress.com/storage/thinksystem/dm-series#rt=product-guide

External backup units

The following table lists the external backup options that are offered by Lenovo.

Table 60. External backup options

Part number	Description
External RDX USB drives	
4T27A10725	ThinkSystem RDX External USB 3.0 Dock
External SAS tape backup drives	
6160S7E	IBM TS2270 Tape Drive Model H7S
6160S8E	IBM TS2280 Tape Drive Model H8S
6160S9E	IBM TS2290 Tape Drive Model H9S
External SAS tape backup autoloaders	
6171S7R	IBM TS2900 Tape Autoloader w/LTO7 HH SAS
6171S8R	IBM TS2900 Tape Autoloader w/LTO8 HH SAS
6171S9R	IBM TS2900 Tape Autoloader w/LTO9 HH SAS
External tape backup libraries	
6741A1F	IBM TS4300 3U Tape Library-Base Unit
6741A3F	IBM TS4300 3U Tape Library-Expansion Unit
Full High 8 Gb Fibre Channel for TS4300	
01KP938	LTO 7 FH Fibre Channel Drive
01KP954	LTO 8 FH Fibre Channel Drive
02JH837	LTO 9 FH Fibre Channel Drive
Half High 8 Gb Fibre Channel for TS4300	
01KP936	LTO 7 HH Fibre Channel Drive
01KP952	LTO 8 HH Fibre Channel Drive
02JH835	LTO 9 HH Fibre Channel Drive
Half High 6 Gb SAS for TS4300	
01KP937	LTO 7 HH SAS Drive
01KP953	LTO 8 HH SAS Drive
02JH836	LTO 9 HH SAS Drive

For more information, see the list of Product Guides in the Backup units category:
https://lenovopress.com/servers/options/backup

Fibre Channel SAN switches

Lenovo offers the ThinkSystem DB Series of Fibre Channel SAN switches for high-performance storage expansion. See the DB Series product guides for models and configuration options:

- ThinkSystem DB Series SAN Switches:
  https://lenovopress.com/storage/switches/rack#rt=product-guide

Rack cabinets

The following table lists the supported rack cabinets.

Table 61. Rack cabinets

Part number	Description
7D2B0001WW / 7D2N0001WW	12U 1200mm Deep Micro Datacenter Rack
7D2C0001WW / 7D2P0001WW	18U 1200mm Deep Micro Datacenter Rack
93072RX	25U Standard Rack (1000mm)
93072PX	25U Static S2 Standard Rack (1000mm)
7D6DA007WW	ThinkSystem 42U Onyx Primary Heavy Duty Rack Cabinet (1200mm)
7D6DA008WW	ThinkSystem 42U Pearl Primary Heavy Duty Rack Cabinet (1200mm)
93604PX	42U 1200mm Deep Dynamic Rack
93614PX	42U 1200mm Deep Static Rack
93634PX	42U 1100mm Dynamic Rack
93634EX	42U 1100mm Dynamic Expansion Rack
93074RX	42U Standard Rack (1000mm)
7D6EA009WW	ThinkSystem 48U Onyx Primary Heavy Duty Rack Cabinet (1200mm)
7D6EA00AWW	ThinkSystem 48U Pearl Primary Heavy Duty Rack Cabinet (1200mm)

For specifications about these racks, see the Lenovo Rack Cabinet Reference, available from:
https://lenovopress.com/lp1287-lenovo-rack-cabinet-reference

For more information, see the list of Product Guides in the Rack cabinets category:
https://lenovopress.com/servers/options/racks

KVM switches and consoles

The following table lists the supported KVM consoles.

Table 62. KVM console

Part number	Description
4XF7A84188	ThinkSystem 18.5" LCD Console (with US English keyboard)

The following table lists the available KVM switches and the options that are supported with them.

Table 64. KVM switches and options

Part number	Description
KVM Console switches	
1754D2X	Global 4x2x32 Console Manager (GCM32)
1754D1X	Global 2x2x16 Console Manager (GCM16)
1754A2X	Local 2x16 Console Manager (LCM16)
1754A1X	Local 1x8 Console Manager (LCM8)
Cables for GCM and LCM Console switches	
46M5383	Virtual Media Conversion Option Gen2 (VCO2)
46M5382	Serial Conversion Option (SCO)

For more information, see the list of Product Guides in the KVM Switches and Consoles category: http://lenovopress.com/servers/options/kvm

Power distribution units

The following table lists the power distribution units (PDUs) that are offered by Lenovo.

Table 65. Power distribution units

Part number	Feature code	Description	ANZ	ASEAN	Brazil	EET	MEA	RUCIS	WE	HTK	INDIA	JAPAN	LA	NA	PRC
0U Basic PDUs															
00YJ776	ATZY	0U 36 C13/6 C19 24A 1 Phase PDU	N	Y	Y	N	N	N	N	N	N	Y	Y	Y	N
00YJ777	ATZZ	0U 36 C13/6 C19 32A 1 Phase PDU	Y	Y	N	Y	Y	Y	Y	Y	Y	N	N	Y	Y
0U Switched and Monitored PDUs															
00YJ783	AU04	0U 12 C13/12 C19 Switched and Monitored 48A 3 Phase PDU	N	N	Y	N	N	N	Y	N	N	Y	Y	Y	N
00YJ781	AU03	0U 20 C13/4 C19 Switched and Monitored 24A 1 Phase PDU	N	N	Y	N	Y	N	Y	N	N	Y	Y	Y	N
1U Switched and Monitored PDUs															
4PU7A81117	BNDV	1U 18 C19/C13 switched and monitored 48A 3P WYE PDU - ETL	N	N	N	N	N	N	N	N	N	N	N	Y	N
4PU7A77467	BLC4	1U 18 C19/C13 Switched and Monitored 80A 3P Delta PDU	N	N	N	N	N	N	N	N	N	Y	N	Y	N
4PU7A77469	BLC6	1U 12 C19/C13 switched and monitored 60A 3P Delta PDU	N	N	N	N	N	N	N	N	N	N	N	Y	N
4PU7A77468	BLC5	1U 12 C19/C13 switched and monitored 32A 3P WYE PDU	Y	Y	Y	Y	Y	Y	Y	Y	Y	N	Y	Y	Y
4PU7A81118	BNDW	1U 18 C19/C13 switched and monitored 48A 3P WYE PDU - CE	Y	Y	Y	Y	Y	Y	Y	Y	Y	N	Y	N	Y
1U Ultra Density Enterprise PDUs (9x IEC 320 C13 + 3x IEC 320 C19 outlets)															
71763NU	6051	Ultra Density Enterprise C19/C13 PDU 60A/208V/3PH	N	N	Y	N	N	N	N	N	N	Y	Y	Y	N
71762NX	6091	Ultra Density Enterprise C19/C13 PDU Module	Y	Y	Y	Y	Y	Y	Y	Y	Y	Y	Y	Y	Y

Part number	Feature code	Description	ANZ	ASEAN	Brazil	EET	MEA	RUCIS	WE	HTK	INDIA	JAPAN	LA	NA	PRC
1U C13 Enterprise PDUs (12x IEC 320 C13 outlets)															
39Y8941	6010	DPI C13 Enterprise PDU Module (WW)	Y	Y	Y	Y	Y	Y	Y	Y	Y	Y	Y	Y	Y
1U Front-end PDUs (3x IEC 320 C19 outlets)															
39Y8938	6002	DPI Single-phase 30A/120V Front-end PDU (US)	Y	Y	Y	Y	Y	Y	Y	Y	Y	Y	Y	Y	Y
39Y8939	6003	DPI Single-phase 30A/208V Front-end PDU (US)	Y	Y	Y	Y	Y	Y	Y	Y	Y	Y	Y	Y	Y
39Y8934	6005	DPI Single-phase 32A/230V Front-end PDU (International)	Y	Y	Y	Y	Y	Y	Y	Y	Y	Y	Y	Y	Y
39Y8940	6004	DPI Single-phase 60A/208V Front-end PDU (US)	Y	N	Y	Y	Y	Y	Y	N	N	Y	Y	Y	N
39Y8935	6006	DPI Single-phase 63A/230V Front-end PDU (International)	Y	Y	Y	Y	Y	Y	Y	Y	Y	Y	Y	Y	Y
1U NEMA PDUs (6x NEMA 5-15R outlets)															
39Y8905	5900	DPI 100-127V NEMA PDU	Y	Y	Y	Y	Y	Y	Y	Y	Y	Y	Y	Y	Y
Line cords for 1U PDUs that ship without a line cord															
40K9611	6504	4.3m, 32A/380-415V, EPDU/IEC 309 3P+N+G 3ph wye (non-US) Line Cord	Y	Y	Y	Y	Y	Y	Y	Y	Y	Y	Y	Y	Y
40K9612	6502	4.3m, 32A/230V, EPDU to IEC 309 P+N+G (non-US) Line Cord	Y	Y	Y	Y	Y	Y	Y	Y	Y	Y	Y	Y	Y
40K9613	6503	4.3m, 63A/230V, EPDU to IEC 309 P+N+G (non-US) Line Cord	Y	Y	Y	Y	Y	Y	Y	Y	Y	Y	Y	Y	Y
40K9614	6500	4.3m, 30A/208V, EPDU to NEMA L6-30P (US) Line Cord	Y	Y	Y	Y	Y	Y	Y	Y	Y	Y	Y	Y	Y
40K9615	6501	4.3m, 60A/208V, EPDU to IEC 309 2P+G (US) Line Cord	N	N	Y	N	N	N	Y	N	N	Y	Y	Y	N
40K9617	6505	4.3m, 32A/230V, Souriau UTG Female to AS/NZ 3112 (Aus/NZ) Line Cord	Y	Y	Y	Y	Y	Y	Y	Y	Y	Y	Y	Y	Y
40K9618	6506	4.3m, 32A/250V, Souriau UTG Female to KSC 8305 (S. Korea) Line Cord	Y	Y	Y	Y	Y	Y	Y	Y	Y	Y	Y	Y	Y

For more information, see the Lenovo Press documents in the PDU category:
https://lenovopress.com/servers/options/pdu

Uninterruptible power supply units

The following table lists the uninterruptible power supply (UPS) units that are offered by Lenovo.

Table 66. Uninterruptible power supply units

Part number	Description
55941AX	RT1.5kVA 2U Rack or Tower UPS (100-125VAC)
55941KX	RT1.5kVA 2U Rack or Tower UPS (200-240VAC)
55942AX	RT2.2kVA 2U Rack or Tower UPS (100-125VAC)
55942KX	RT2.2kVA 2U Rack or Tower UPS (200-240VAC)
55943AX	RT3kVA 2U Rack or Tower UPS (100-125VAC)
55943KX	RT3kVA 2U Rack or Tower UPS (200-240VAC)
55945KX	RT5kVA 3U Rack or Tower UPS (200-240VAC)
55946KX	RT6kVA 3U Rack or Tower UPS (200-240VAC)
55948KX	RT8kVA 6U Rack or Tower UPS (200-240VAC)
55949KX	RT11kVA 6U Rack or Tower UPS (200-240VAC)
55948PX	RT8kVA 6U 3:1 Phase Rack or Tower UPS (380-415VAC)
55949PX	RT11kVA 6U 3:1 Phase Rack or Tower UPS (380-415VAC)
55943KT†	ThinkSystem RT3kVA 2U Standard UPS (200-230VAC) (2x C13 10A, 2x GB 10A, 1x C19 16A outlets)
55943LT†	ThinkSystem RT3kVA 2U Long Backup UPS (200-230VAC) (2x C13 10A, 2x GB 10A, 1x C19 16A outlets)
55946KT†	ThinkSystem RT6kVA 5U UPS (200-230VAC) (2x C13 10A outlets, 1x Terminal Block output)
5594XKT†	ThinkSystem RT10kVA 5U UPS (200-230VAC) (2x C13 10A outlets, 1x Terminal Block output)

† Only available in China and the Asia Pacific market.

For more information, see the list of Product Guides in the UPS category:
https://lenovopress.com/servers/options/ups

Lenovo Financial Services

Lenovo Financial Services reinforces Lenovo's commitment to deliver pioneering products and services that are recognized for their quality, excellence, and trustworthiness. Lenovo Financial Services offers financing solutions and services that complement your technology solution anywhere in the world.

We are dedicated to delivering a positive finance experience for customers like you who want to maximize your purchase power by obtaining the technology you need today, protect against technology obsolescence, and preserve your capital for other uses.

We work with businesses, non-profit organizations, governments and educational institutions to finance their entire technology solution. We focus on making it easy to do business with us. Our highly experienced team of finance professionals operates in a work culture that emphasizes the importance of providing outstanding customer service. Our systems, processes and flexible policies support our goal of providing customers with a positive experience.

We finance your entire solution. Unlike others, we allow you to bundle everything you need from hardware and software to service contracts, installation costs, training fees, and sales tax. If you decide weeks or months later to add to your solution, we can consolidate everything into a single invoice.

Our Premier Client services provide large accounts with special handling services to ensure these complex transactions are serviced properly. As a premier client, you have a dedicated finance specialist who manages your account through its life, from first invoice through asset return or purchase. This specialist develops an in-depth understanding of your invoice and payment requirements. For you, this dedication provides a high-quality, easy, and positive financing experience.

For your region-specific offers, please ask your Lenovo sales representative or your technology provider about the use of Lenovo Financial Services. For more information, see the following Lenovo website:

https://www.lenovo.com/us/en/landingpage/lenovo-financial-services/

Related publications and links

For more information, see these resources:

- ThinkSystem SR550 product page
  https://www.lenovo.com/us/en/data-center/servers/racks/ThinkSystem-SR550/p/77XX7SRSR55
- Datasheet for the ThinkSystem SR550:
  https://lenovopress.com/ds0030-lenovo-thinksystem-sr550
- 3D Interactive Tour of the ThinkSystem SR550:
  https://lenovopress.com/lp0671-3d-tour-thinksystem-sr550
- Walkthrough Video for the ThinkSystem SR550:
  https://lenovopress.com/lp0745-thinksystem-sr550-server-video-walkthrough
- User Manuals for the ThinkSystem SR550:
  https://thinksystem.lenovofiles.com/help/topic/7X03/introduction.html?cp=4_3
  - Quick Start Guide
  - Setup Guide
  - Rack Installation Guides
  - Maintenance Manual
  - Messages and Codes Reference
  - UEFI Manual
- Lenovo Data Center Support Downloads - ThinkSystem SR550:
  http://datacentersupport.lenovo.com/products/servers/thinksystem/sr550/7x03/downloads
  http://datacentersupport.lenovo.com/products/servers/thinksystem/sr550/7x04/downloads
- Lenovo Hardware Installation & Removal Videos on the ThinkSystem SR550:
  - YouTube: https://www.youtube.com/playlist?list=PLYV5R7hVcs-C9jFjZnXQ6AmTXaIdX6_HJ
  - Youku: https://list.youku.com/albumlist/show/id_50429987
- Lenovo Data Center Solution Configurator (DCSC):
  http://dcsc.lenovo.com

Related product families

Product families related to this document are the following:

- 2-Socket Rack Servers
- ThinkSystem SR550 Server

Notices

Lenovo may not offer the products, services, or features discussed in this document in all countries. Consult your local Lenovo representative for information on the products and services currently available in your area. Any reference to a Lenovo product, program, or service is not intended to state or imply that only that Lenovo product, program, or service may be used. Any functionally equivalent product, program, or service that does not infringe any Lenovo intellectual property right may be used instead. However, it is the user's responsibility to evaluate and verify the operation of any other product, program, or service. Lenovo may have patents or pending patent applications covering subject matter described in this document. The furnishing of this document does not give you any license to these patents. You can send license inquiries, in writing, to:

Lenovo (United States), Inc.
8001 Development Drive
Morrisville, NC 27560
U.S.A.
Attention: Lenovo Director of Licensing

LENOVO PROVIDES THIS PUBLICATION ”AS IS” WITHOUT WARRANTY OF ANY KIND, EITHER EXPRESS OR IMPLIED, INCLUDING, BUT NOT LIMITED TO, THE IMPLIED WARRANTIES OF NON-INFRINGEMENT, MERCHANTABILITY OR FITNESS FOR A PARTICULAR PURPOSE. Some jurisdictions do not allow disclaimer of express or implied warranties in certain transactions, therefore, this statement may not apply to you.

This information could include technical inaccuracies or typographical errors. Changes are periodically made to the information herein; these changes will be incorporated in new editions of the publication. Lenovo may make improvements and/or changes in the product(s) and/or the program(s) described in this publication at any time without notice.

The products described in this document are not intended for use in implantation or other life support applications where malfunction may result in injury or death to persons. The information contained in this document does not affect or change Lenovo product specifications or warranties. Nothing in this document shall operate as an express or implied license or indemnity under the intellectual property rights of Lenovo or third parties. All information contained in this document was obtained in specific environments and is presented as an illustration. The result obtained in other operating environments may vary. Lenovo may use or distribute any of the information you supply in any way it believes appropriate without incurring any obligation to you.

Any references in this publication to non-Lenovo Web sites are provided for convenience only and do not in any manner serve as an endorsement of those Web sites. The materials at those Web sites are not part of the materials for this Lenovo product, and use of those Web sites is at your own risk. Any performance data contained herein was determined in a controlled environment. Therefore, the result obtained in other operating environments may vary significantly. Some measurements may have been made on development-level systems and there is no guarantee that these measurements will be the same on generally available systems. Furthermore, some measurements may have been estimated through extrapolation. Actual results may vary. Users of this document should verify the applicable data for their specific environment.

© Copyright Lenovo 2023. All rights reserved.

This document, LP1046, was created or updated on August 2, 2023.

Send us your comments in one of the following ways:

- Use the online Contact us review form found at:
  https://lenovopress.lenovo.com/LP1046
- Send your comments in an e-mail to:
  comments@lenovopress.com

This document is available online at https://lenovopress.lenovo.com/LP1046.

Trademarks

Lenovo and the Lenovo logo are trademarks or registered trademarks of Lenovo in the United States, other countries, or both. A current list of Lenovo trademarks is available on the Web at https://www.lenovo.com/us/en/legal/copytrade/.

The following terms are trademarks of Lenovo in the United States, other countries, or both:
Lenovo®
Bootable Media Creator
Flex System
Lenovo Services
RackSwitch
System x®
ThinkServer®
ThinkSystem®
TopSeller
TruDDR4
UpdateXpress System Packs
XClarity®

The following terms are trademarks of other companies:

Intel® and Xeon® are trademarks of Intel Corporation or its subsidiaries.

Linux® is the trademark of Linus Torvalds in the U.S. and other countries.

Hyper-V®, Microsoft®, PowerShell, Windows PowerShell®, Windows Server®, and Windows® are trademarks of Microsoft Corporation in the United States, other countries, or both.

SPECpower® is a trademark of the Standard Performance Evaluation Corporation (SPEC).

Other company, product, or service names may be trademarks or service marks of others.