Lenovo ThinkSystem SR670 V2 Server
Product Guide

The Lenovo ThinkSystem SR670 V2 is a versatile GPU-rich 3U rack server that supports eight double-wide GPUs including the new NVIDIA A100 and A40 Tensor Core GPUs, or the NVIDIA HGX A100 4-GPU offering with NVLink and Lenovo Neptune hybrid liquid-to-air cooling. The server is based on the new third-generation Intel Xeon Scalable processor family (formerly codenamed "Ice Lake") and the new Intel Optane Persistent Memory 200 Series.

The server delivers optimal performance for Artificial Intelligence (AI), High Performance Computing (HPC) and graphical workloads across an array of industries. Retail, manufacturing, financial services and healthcare industries can leverage the processing power of the GPUs in the SR670 V2 to extract greater insights and drive innovation utilizing machine learning (ML) and deep learning (DL).

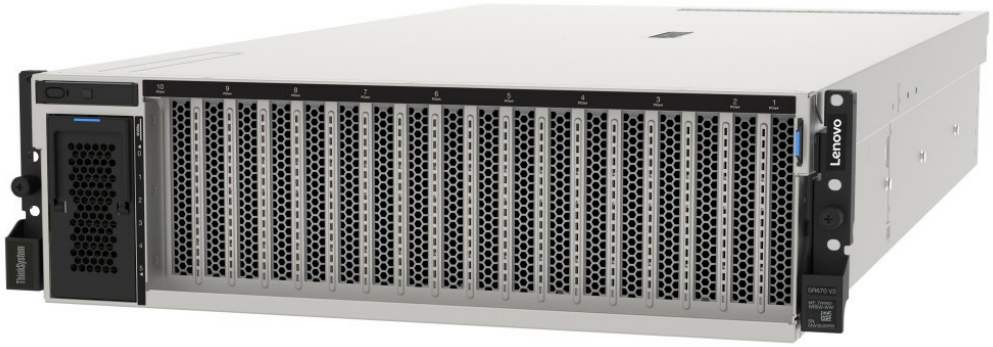

Figure 1. Lenovo ThinkSystem SR670 V2 configured to support eight double-wide GPUs

Did you know?

Traditional air-cooling methods are reaching critical limits. Increases in component power especially on CPU and GPU have resulted in higher energy and infrastructure costs, extremely loud systems and heightened carbon footprints. To combat these challenges and dissipate heat quickly, the SR670 V2 employs Lenovo Neptune liquid-to-air (L2A) hybrid cooling technology. The heat of the NVIDIA HGX A100 GPUs is removed through a unique closed loop liquid-to-air heat exchanger that delivers the benefits of liquid cooling such as higher density, lower power consumption, quiet operation and higher performance without adding plumbing.

Key features

The SR670 V2 features a modular design for ultimate flexibility. Multiple configurations are supported, including:

- Up to eight double-wide GPUs with NVLink bridges
- NVIDIA HGX A100 4-GPU with NVLink and Lenovo Neptune hybrid liquid cooling
- Choice of front or rear high-speed networking
- Choice of local high speed NVMe storage

There are three different base configurations of the SR670 V2 as shown in the following figure. The configurations determine the type and quantity of GPUs supported as well as the supported drive bays.

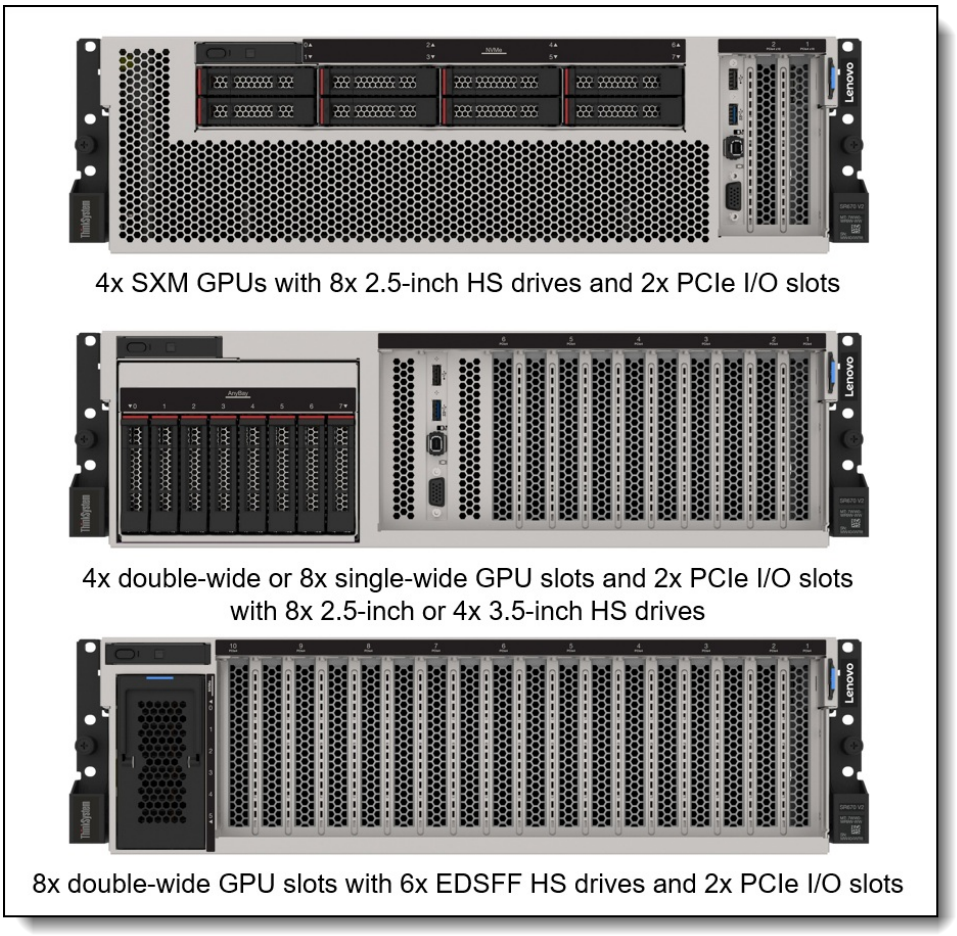

Figure 2. Three base configurations of the ThinkSystem SR670 V2

The SR670 V2 is built on two third-generation Intel Xeon Scalable processors and is designed to support the latest GPUs in the NVIDIA Ampere datacenter portfolio. The SR670 V2 delivers performance optimized for your workload, be it visualization, rendering or computationally intensive HPC and AI.

Scalability and performance

The SR670 V2 offers numerous features to boost performance, improve scalability and reduce costs:

- Supports up to eight high-performance PCIe double-wide GPUs including the new NVIDIA A100 and A40 Tensor Core GPUs.
- Support for up to eight single-wide GPUs including the new NVIDIA A10
- Supports the NVIDIA HGX A100 4-GPU complex with NVLink and Lenovo Neptune hybrid liquid cooling.
- Supports NVIDIA NVLink, which offers a GPU-to-GPU direct connection of up to 600 GB/s bandwidth and supported in both SXM and double-wide PCIe GPU configurations. NVLink also allows for a larger combined memory footprint for bigger batch sizes or the processing of larger images.
- Supports two third-generation Intel Xeon Processor Scalable processors
    - Up to 40 cores and 80 threads
    - Core speeds of up to 3.6 GHz
    - TDP ratings of up to 270W
- Supports up to 32 TruDDR4 memory DIMMs operating at up to 3200 MHz means you have the fastest available memory subsystem.
- Supports configurations of 2 DIMMs per channel to operate at the 3200 MHz rated speed of the memory DIMMs.
- Using 128GB RDIMMs, the server supports up to 4TB of system memory.
- Supports the new Intel Optane Persistent Memory 200 Series for advanced in-memory database applications, dense-virtualization; up to 16 PMem Modules can be installed in conjunction with regular system memory.
- Supports GPU Direct RDMA I/O where high-speed network adapters are directly connected to the GPUs, to maximize I/O performance.
- Supports GPU Direct Storage where NVMe drives are directly connected to the GPUs, to maximize storage performance.
- A variety of slot configurations available, depending on the GPU and NVMe storage configuration selected:
    - Two front PCIe 4.0 x16 slots
    - Four rear PCIe 4.0 x16 slots
    - One rear OCP 3.0 slot, PCIe 4.0 x8 or x16
- Supports a variety of internal storage configurations:
    - 8x 2.5-inch hot-swap SSDs or HDDs, with SAS, SATA or NVMe interfaces
    - 6x EDSFF E1.S hot-swap NVMe SSDs
    - 4x 3.5-inch hot-swap SATA SSDs
- Supports NVMe drives without oversubscription of PCIe lanes (1:1 connectivity). The use of NVMe drives maximizes drive I/O performance, in terms of throughput, bandwidth, and latency.
- Supports SATA or NVMe drives using the onboard controller, enabling an internal storage solution that doesn't require a PCIe adapter.
- Supports high-speed RAID controllers from Lenovo and Broadcom providing 12 Gb SAS connectivity to the drive backplanes. A variety of PCIe 3.0 and PCIe 4.0 RAID adapters are available.
- Supports M.2 drives for convenient operating system boot functions. Available M.2 adapters support either one M.2 drive or two M.2 drives in a RAID 1 configuration for performance and reliability.
- The server has an industry-standard OCP 3.0 small form factor (SFF) slot, with a PCIe 4.0 interface, up to x16, supporting a variety of Ethernet network adapters. A simple-swap mechanism with a thumbscrew and pull-tab enables tool-less installation and removal of the adapter. The adapter supports shared BMC network sideband connectivity to enable out-of-band systems management.

- The server offers PCI Express 4.0 I/O expansion capabilities that doubles the theoretical maximum bandwidth of PCIe 3.0 (16GT/s in each direction for PCIe 4.0, compared to 8 GT/s with PCIe 3.0). A PCIe 4.0 x16 slot provides 64 GB/s bandwidth, enough to support a 200GbE network connection.
- The server offers either a choice of PCIe 4.0 x16 full-height slots, depending on the GPU and NVMe connections selected. Available slots are two front slots and four rear slots, plus the slot dedicated to the OCP adapter. The flexibility of configuration ensures you can get the PCIe resources you need for a high-performance HPC/AI implementation.

Availability and serviceability

The SR670 V2 provides many features to simplify serviceability and increase system uptime:

- Designed to run 24 hours a day, 7 days a week
- The server offers Single Device Data Correction (SDDC, also known as Chipkill), Adaptive Double-Device Data Correction (ADDDC, also known as Redundant Bit Steering or RBS) and memory mirroring for redundancy in the event of a non-correctable memory failure.
- The server offers hot-swap drives, supporting RAID redundancy for data protection and greater system uptime.
- Available M.2 RAID Boot Adapters support RAID-1 which can enable two SATA or two NVMe M.2 drives to be configured as a redundant pair.
- The server has four hot-swap redundant power supplies and five simple-swap redundant fans to provide availability for business-critical applications.
- The Liquid Assisted Cooling Module on the configuration with SXM GPUs employs four redundant low-pressure pumps to circulate the liquid to cool the GPUs.
- The light path diagnostics feature uses LEDs to lead the technician to failed (or failing) components, which simplifies servicing, speeds up problem resolution, and helps improve system availability.
- Solid-state drives (SSDs) offer more reliability and performance than traditional mechanical HDDs for greater uptime.
- Proactive Platform Alerts (including PFA and SMART alerts): Processors, voltage regulators, memory, internal storage (SAS/SATA HDDs and SSDs, NVMe SSDs, M.2 storage, flash storage adapters), fans, power supplies, RAID controllers, server ambient and subcomponent temperatures. Alerts can be surfaced through the XClarity Controller to managers such as Lenovo XClarity Administrator, VMware vCenter, and Microsoft System Center. These proactive alerts let you take appropriate actions in advance of possible failure, thereby increasing server uptime and application availability.
- The built-in XClarity Controller continuously monitors system parameters, triggers alerts, and performs recovery actions in case of failures to minimize downtime.
- Built-in diagnostics in UEFI, using Lenovo XClarity Provisioning Manager, speed up troubleshooting tasks to reduce service time.
- Lenovo XClarity Provisioning Manager supports diagnostics and can save service data to a USB key drive or remote CIFS share folder for troubleshooting and reduce service time.
- Auto restart in the event of a momentary loss of AC power (based on power policy setting in the XClarity Controller service processor)
- Offers a diagnostics port on the front of the server to allow you to attach an external diagnostics handset for enhanced systems management capabilities.
- Support for the XClarity Administrator Mobile app running on a supported smartphone or tablet and connected to the server through the service-enabled USB port, enables additional local systems management functions.
- Three-year or one-year customer-replaceable unit and onsite limited warranty (varies by geography), 9 x 5 next business day. Optional service upgrades are available.

Manageability and security

Systems management features simplify local and remote management of the SR670 V2:

- The server includes an XClarity Controller (XCC) to monitor server availability. Optional upgrade to XCC Advanced to provide remote control (keyboard video mouse) functions. Optional upgrade to XCC Enterprise and enables the additional support for the mounting of remote media files (ISO and IMG image files), boot capture, and power capping.
- Lenovo XClarity Administrator offers comprehensive hardware management tools that help to increase uptime, reduce costs and improve productivity through advanced server management capabilities.
- UEFI-based Lenovo XClarity Provisioning Manager, accessible from F1 during boot, provides system inventory information, graphical UEFI Setup, platform update function, RAID Setup wizard, operating system installation function, and diagnostic functions.
- Support for Lenovo XClarity Energy Manager, which captures real-time power and temperature data from the server and provides automated controls to lower energy costs.
- Supports Lenovo intelligent Computing Orchestration (LiCO), a powerful platform that manages cluster resources for HPC and AI applications. LiCO supports multiple AI frameworks, including TensorFlow, Caffe, Neon, and MXNet, allowing you to leverage a single cluster for diverse workload requirements.
- An integrated industry-standard Unified Extensible Firmware Interface (UEFI) enables improved setup, configuration, and updates, and simplifies error handling.
- Support for industry standard management protocols, IPMI 2.0, SNMP 3.0, Redfish REST API, serial console via IPMI.
- An integrated hardware Trusted Platform Module (TPM) supporting TPM 2.0 enables advanced cryptographic functionality, such as digital signatures and remote attestation.
- Administrator and power-on passwords help protect from unauthorized access to the server.
- Supports Secure Boot to ensure only a digitally signed operating system can be used. Supported with HDDs and SSDs, as well as 7mm and M.2 drives.
- Industry-standard Advanced Encryption Standard (AES) NI support for faster, stronger encryption.
- Intel Execute Disable Bit functionality can prevent certain classes of malicious buffer overflow attacks when combined with a supported operating system.
- Intel Trusted Execution Technology provides enhanced security through hardware-based resistance to malicious software attacks, allowing an application to run in its own isolated space, protected from all other software running on a system.
- An included chassis intrusion switch provides an additional physical security feature.

Energy efficiency

The SR670 V2 offers the following energy-efficiency features to save energy, reduce operational costs, and increase energy availability:

- Energy-efficient system board components help lower operational costs.
- High-efficiency power supplies with 80 PLUS Platinum certification
- Solid-state drives (SSDs) consume as much as 80% less power than traditional spinning 2.5-inch HDDs.
- Optional Lenovo XClarity Energy Manager provides advanced data center power notification, analysis, and policy-based management to help achieve lower heat output and reduced cooling needs.

Components and connectors

The following figure shows the main components on the front of the configuration with 4x SXM GPUs and 8x 2.5-inch hot-swap drives.

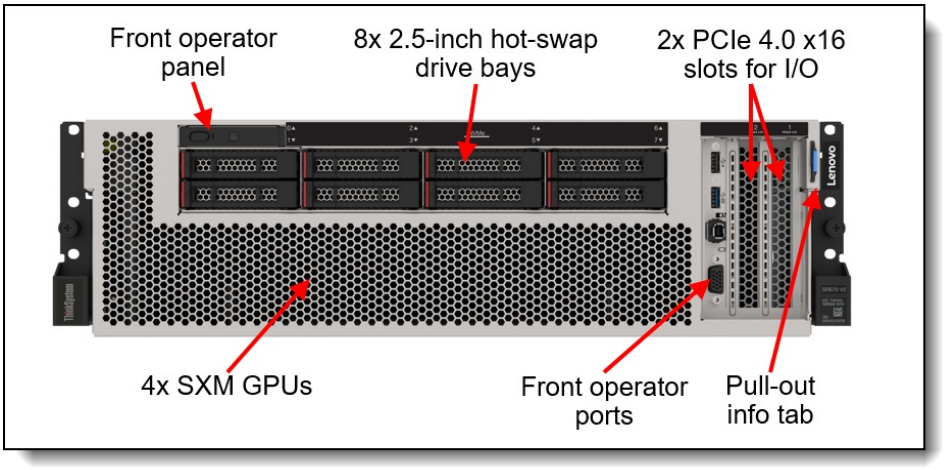

Figure 3. Front view of the SR670 V2 with 4x SXM GPUs and 8x 2.5-inch hot-swap drives

The following figure shows the main components on the front of the configuration with 4x SXM GPUs and 4x 2.5-inch hot-swap drives. In this configuration, there are only half the drive slots operational which instead allows the support of the OCP rear slot.

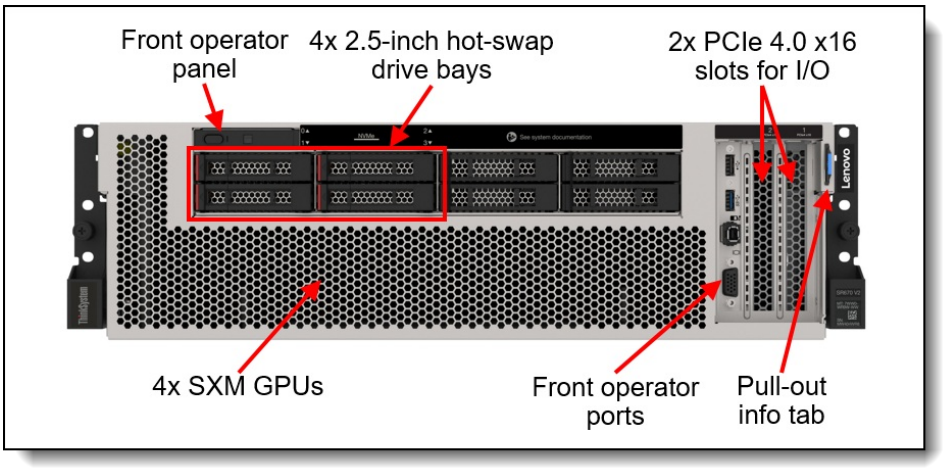

Figure 4. Front view of the SR670 V2 with 4x SXM GPUs and 4x 2.5-inch hot-swap drives

The following figure shows the main components on the front of the configuration with 4x double-wide PCIe GPUs and either 8x 2.5-inch or 4x 3.5-inch hot-swap drives. This configuration also supports 8x single-wide GPUs.

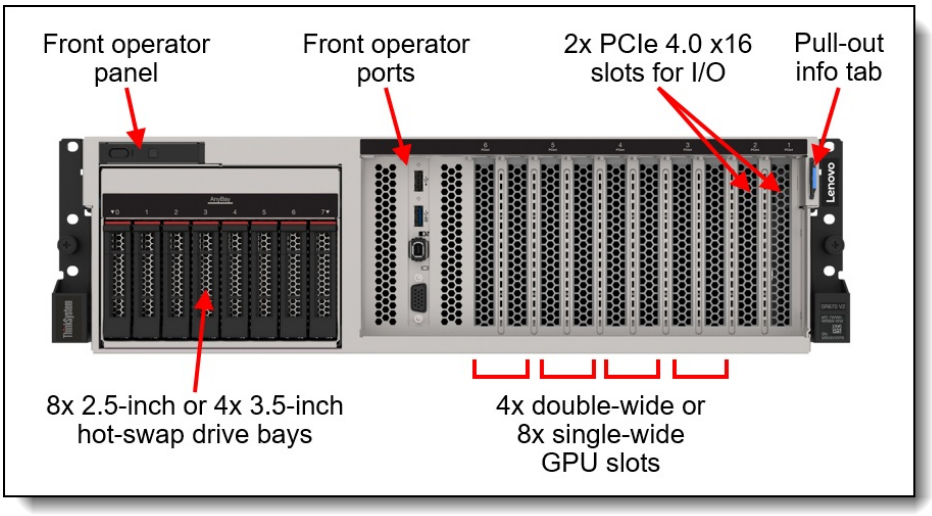

Figure 5. Front view of the SR670 V2 with 4x double-wide PCIe GPUs and either 8x 2.5-inch or 4x 3.5-inch hot-swap drives

The following figure shows the main components on the front of the configuration with 8x double-wide PCIe GPUs and 6x EDSFF hot-swap drives. In this configuration, there are two front I/O PCIe slots.

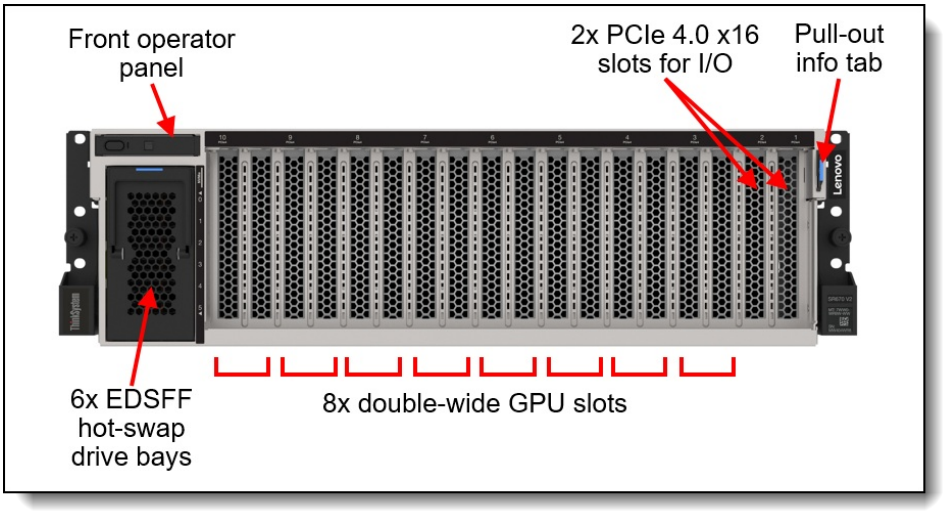

Figure 6. Front view of the SR670 V2 with 8x double-wide PCIe GPUs, 6x EDSFF hot-swap drives, and front I/O

The following figure shows a second variation of the configuration with 8x double-wide PCIe GPUs and 6x EDSFF hot-swap drives. In this configuration, there are no front I/O PCIe slots which instead allows the support of the front operator ports.

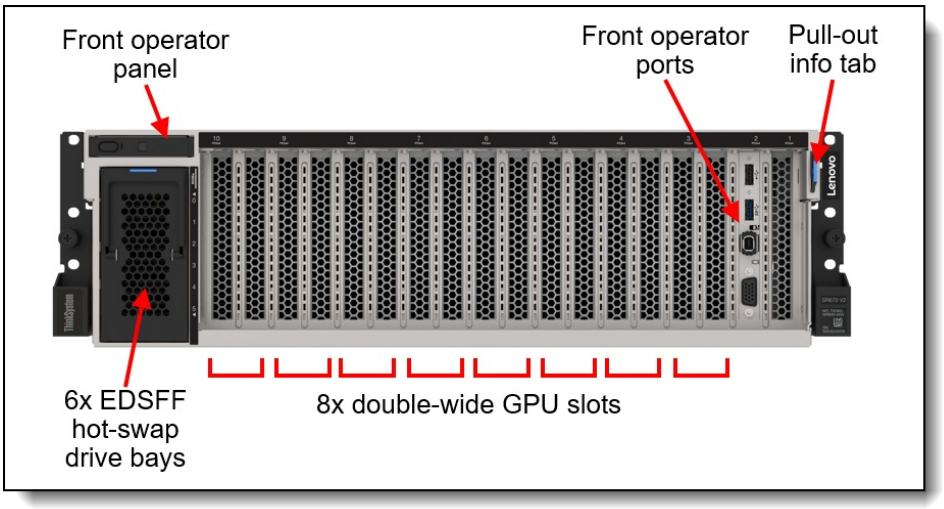

Figure 7. Front view of the SR670 V2 with 8x double-wide PCIe GPUs, 6x EDSFF hot-swap drives, without front I/O

The following figure shows the components visible from the rear of the server. Note that not all configurations support PCIe slots at the rear of the server

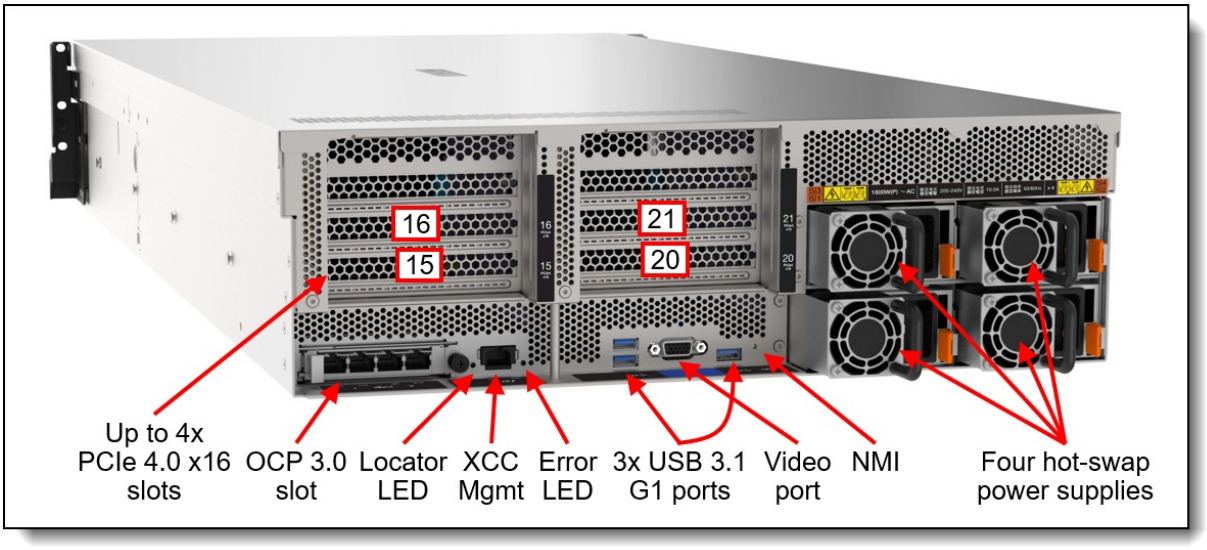

Figure 8. Rear view of the ThinkSystem SR670 V2

The following two figures show the internals of the server with SXM GPUs installed. The first figure shows the drive cage and cooling fans installed.

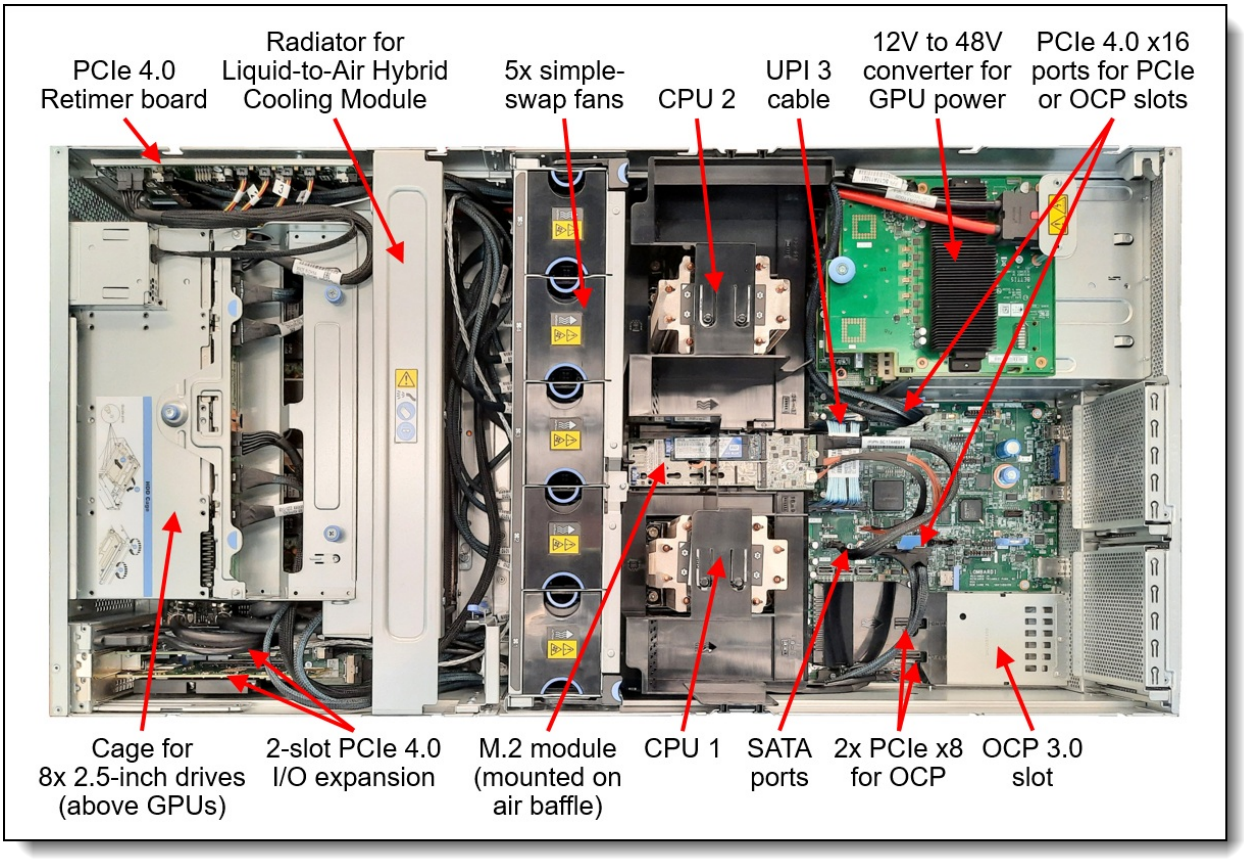

Figure 9. Internal view of the SR670 V2 with 4x SXM GPUs and 8x 2.5-inch hot-swap drives

The following figure shows the SXM GPU server with the drive cage and cooling fans removed. The figure shows the Lenovo Neptune liquid-to-air (L2A) hybrid cooling module, which consists of cold plates mounted on top of the GPUs, a large radiator, and four redundant low-pressure pumps and tubing infrastructure to circulate liquid between the cold plates and the radiator.

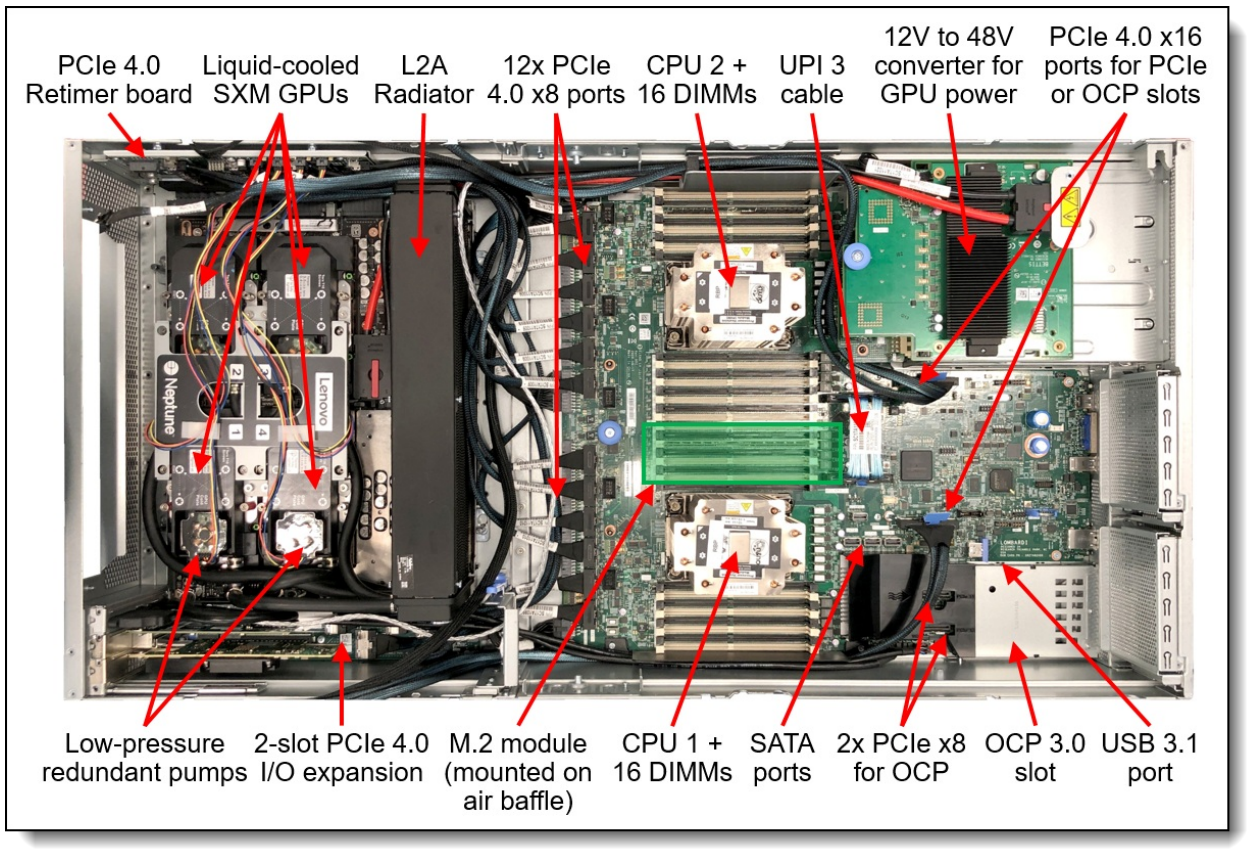

Figure 10. Internal view of the SR670 V2 with 4x SXM GPUs and 8x 2.5-inch hot-swap drives (drives and fans removed)

The following figure shows the internals of the server with four double-wide GPUs installed.

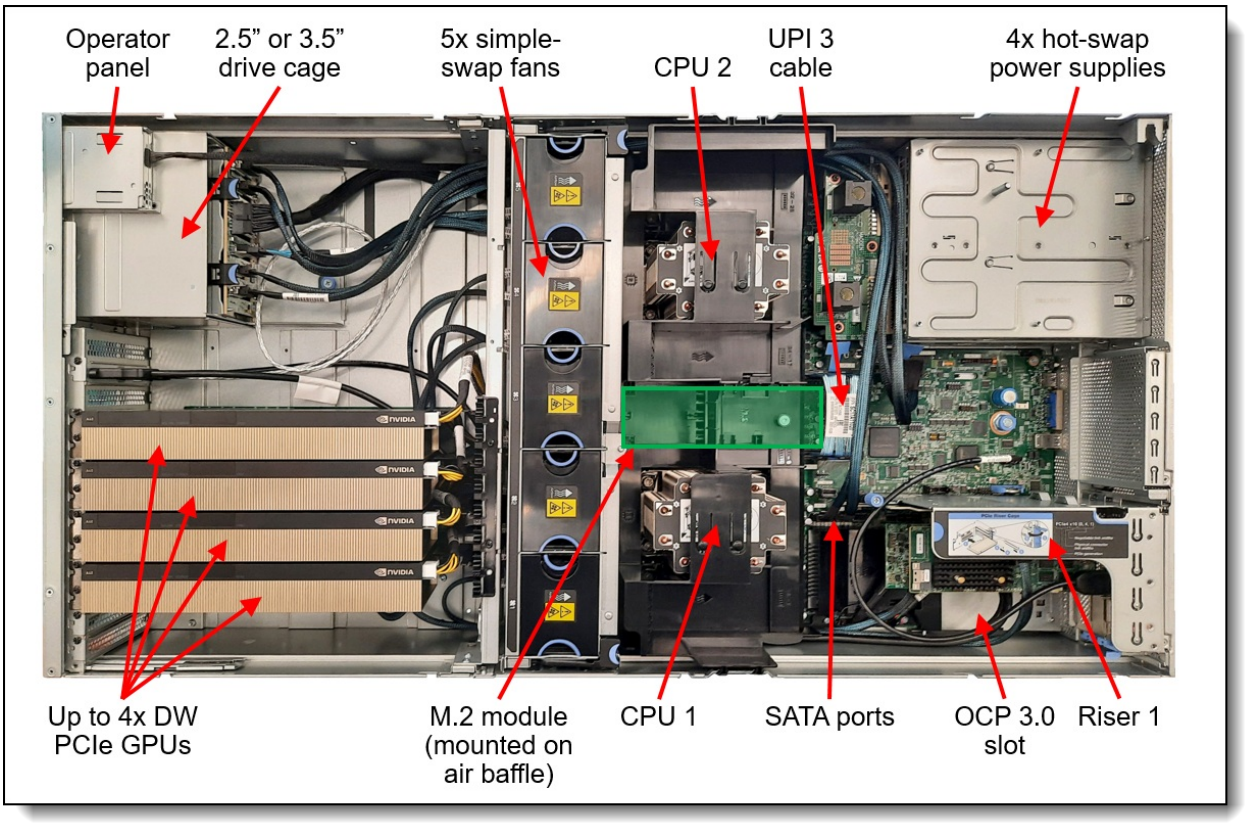

Figure 11. Internal view of the SR670 V2 with 4x double-wide PCIe GPUs and 8x 2.5-inch drives (8x single-wide GPUs also supported; 4x 3.5-inch hot-swap drives also supported)

The following figure shows the internals of the server with eight double-wide GPUs installed (four removed to show the PCIe switch board underneath).

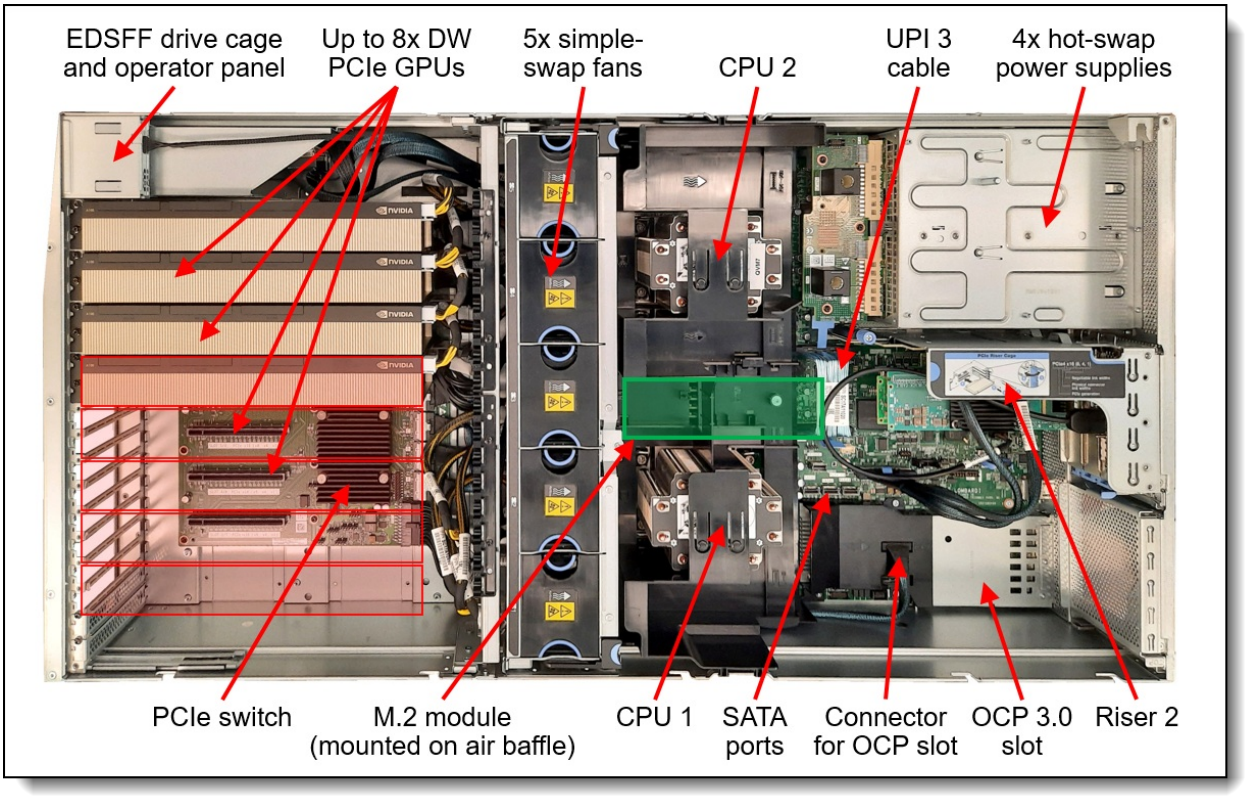

Figure 12. Internal view of the SR670 V2 with 8x double-wide PCIe GPUs and 6x EDSFF hot-swap drives

System architecture

The following figure shows the architectural block diagram of the SR670 V2, showing the major components and their connections.

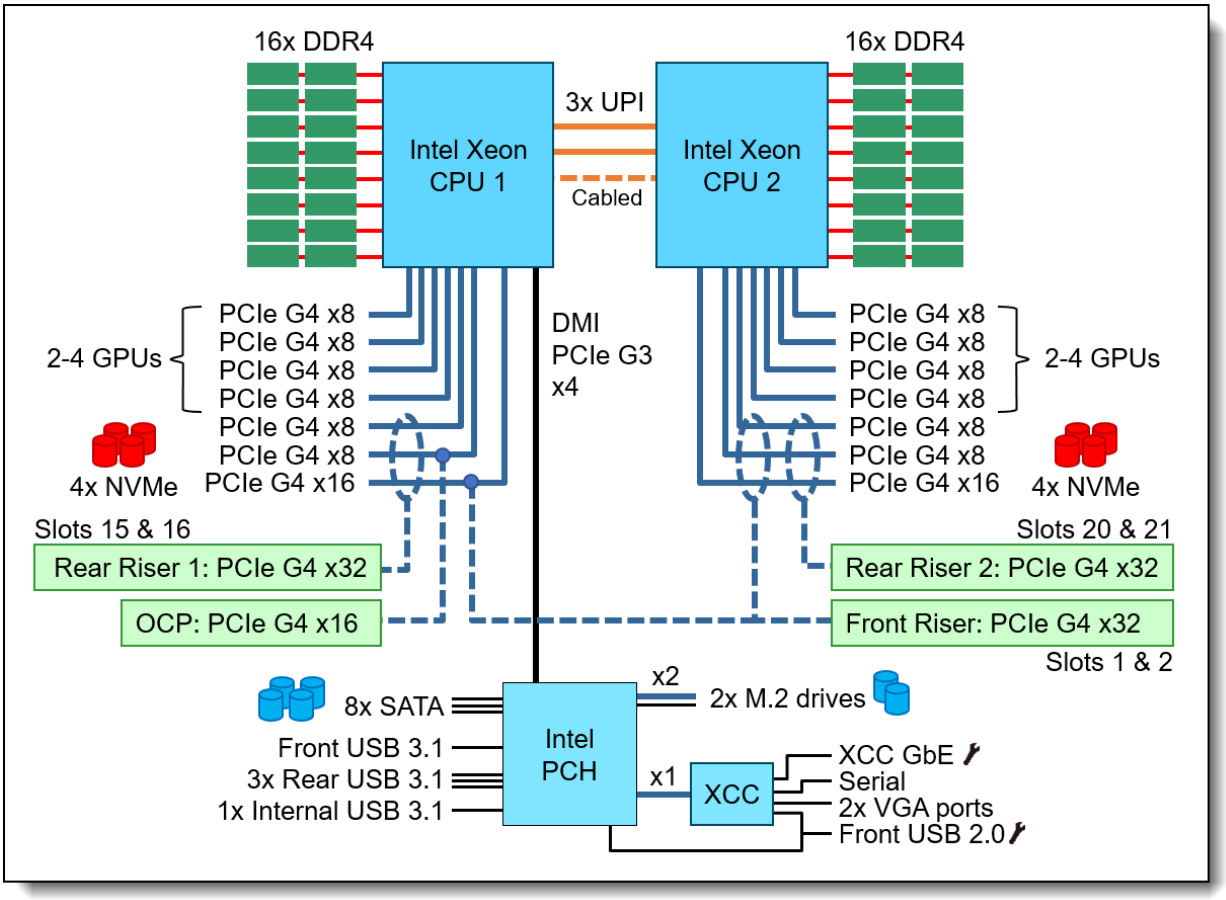

Figure 13. SR670 V2 system architectural block diagram

Standard specifications

The following table lists the standard specifications.

Table 1. Standard specifications

Components	Specification
Machine types	7Z22 - 1 year warranty 7Z23 - 3 year warranty
Form factor	3U rack
Processor	Two third-generation Intel Xeon Scalable processor (formerly codenamed "Ice Lake"). Supports processors up to 40 cores, core speeds of up to 3.6 GHz, and TDP ratings of up to 270W.
Chipset	Intel C621A "Lewisburg" chipset, part of the platform codenamed "Whitley"
Memory	32 DIMM slots with two processors (16 DIMM slots per processor). Each processor has 8 memory channels, with 2 DIMMs per channel (DPC). Lenovo TruDDR4 RDIMMs and 3DS RDIMMs are supported. DIMM slots are shared between standard system memory and persistent memory. DIMMs operate at up to 3200 MHz at 2 DPC.

Components	Specification
Persistent memory	Supports up to 16x Intel Optane Persistent Memory 200 Series modules (8 per processor) installed in the DIMM slots. Persistent memory (Pmem) is installed in combination with system memory DIMMs.
Memory maximum	With RDIMMs: Up to 4TB by using 32x 128GB 3DS RDIMMs With Persistent Memory: Up to 4TB by using 16x 128GB 3DS RDIMMs and 16x 128GB Pmem modules (1.5TB per processor)
Memory protection	ECC, SDDC (for x4-based memory DIMMs), ADDDC (for x4-based memory DIMMs, requires Platinum or Gold processors), and memory mirroring.

Disk drive bays	Either 2.5-inch, 3.5-inch or EDSFF drives, depending on the configuration:
	• Configurations with SXM GPUs (SXM model):
	  ◦ 4x or 8x 2.5-inch hot-swap NVMe drive bays
	• Configurations with 4x double-wide GPUs or 8x single-wide GPUs (4-DW GPU model):
	  ◦ 8x 2.5-inch hot-swap AnyBay drive bays supporting SAS, SATA or NVMe SSDs, or SATA HDDs
	  ◦ 4x 3.5-inch hot-swap drive bays supporting SATA HDDs or SSDs (NVMe with Special Bid)
	• Configurations with 8x double-wide GPUs (8-DW GPU model):
	  ◦ 6x EDSFF E1.S hot-swap NVMe drive bays
	The server also supports an internal M.2 adapter supporting up to two M.2 drives. See the internal storage section for details.

Maximum internal storage	• SXM model:
	  ◦ 122.88TB using 8x 15.36TB 2.5-inch NVMe SSDs
	• 4-DW GPU model:
	  ◦ 245.76TB using 8x 30.72TB 2.5-inch SAS SSDs
	  ◦ 245.76TB using 8x 30.72TB 2.5-inch NVMe SSDs
	  ◦ 16TB using 8x 2TB 2.5-inch HDDs
	  ◦ 88TB using 4x 22TB 3.5-inch HDDs
	  ◦ 30.72TB using 4x 7.68TB 3.5-inch SAS/SATA SSDs
	• 8-DW GPU model:
	  ◦ 46.08TB using 6x 7.68TB EDSFF NVMe SSDs

Storage controller	• 8x Onboard SATA ports (Intel VROC SATA RAID, formerly known as Intel RSTe RAID) • Up to 8x Onboard NVMe ports (includes Intel VROC NVMe RAID, with optional license for non-Intel NVMe SSDs) • 12 Gb SAS/SATA RAID adapters • 12 Gb SAS/SATA non-RAID HBAs
Optical drive bays	No internal optical drive.
Tape drive bays	No internal backup drive.

Components	Specification
Network interfaces	OCP 3.0 SFF slot with flexible PCIe 4.0 x8 or x16 host interface, available depending on the server configurations: • SXM model: Supported, dependent on the storage configuration • 4-DW GPU model: Supported, dependent on the configuration of PCIe slots • 8-DW GPU model: Supported The OCP slot supports a variety of 2-port and 4-port adapters with 1GbE, 10GbE and 25GbE network connectivity. One port can optionally be shared with the XClarity Controller (XCC) management processor for Wake-on-LAN and NC-SI support.
PCI Expansion slots	Up to 4x PCIe 4.0 slots, depending on the GPU and drive bay configuration selected. Slot selection is from: • 2x front slots, PCIe 4.0, full-height slots; half-length in SXM configurations, full-length in 4-DW GPU and 8-DW GPU configurations • 4x rear slots, enabled using riser cards, PCIe 4.0, full-height, half-length slots

GPU support	Supports up to 8x double-wide PCIe GPUs or 4x SXM GPUs, depending on the configuration:
	• SXM model:
	  ◦ 4x SXM GPUs with Lenovo Neptune liquid-to-air cooling and 4x or 8x 2.5-inch drive bays
	• 4-DW GPU model:
	  ◦ 4x double-wide GPUs with 8x 2.5-inch or 4x 3.5-inch drive bays
	  ◦ Available via Special Bid: 8x single-wide GPUs with 8x 2.5-inch or 4x 3.5-inch drive bays
	• 8-DW GPU model:
	  ◦ 8x double-wide GPUs with 6x EDSFF drive bays
	Note: Configurations with single-wide GPUs such as the NVIDIA A10 may be possible via a Special Bid request.

Ports	Front: • SXM model, 4-DW GPU model, and 8-DW GPU model with rear I/O slots: 1x USB 3.1 G1 (5 Gb/s) port, 1x USB 2.0 port (also for XCC local management), External diagnostics port, VGA port. • 8-DW GPU model with front I/O slots: No front ports Rear: • All models: 3x USB 3.1 G1 (5 Gb/s) ports, 1x VGA video port, 1x RJ-45 1GbE systems management port for XCC remote management. • Models with rear I/O slots: Optional DB-9 COM serial port (installs in a slot). Internal: • All models: 1x USB 3.1 G1 connector for operating system or license key purposes
Cooling	5x dual-rotor simple-swap 80 mm fans, configuration dependent. Fans are N+1 rotor redundant, tolerating a single-rotor failure. One fan integrated in each power supply.

Components	Specification
Power supply	Up to four hot-swap redundant AC power supplies with 80 PLUS Platinum certification. 1800 W or 2400 W AC options, supporting 220 V AC. In China only, power supplies also support 240 V DC. • SXM model: 4x 2400W • 4-DW GPU model: 2x 2400W or 4x 1800W or 4x 2400W • 8-DW GPU model: 4x 2400W
Video	G200 graphics with 16 MB memory with 2D hardware accelerator, integrated into the XClarity Controller. Maximum resolution is 1920x1200 32bpp at 60Hz.
Hot-swap parts	Drives and power supplies.
Systems management	Operator panel with status LEDs. On SXM and 4-DW GPU models, External Diagnostics Handset with LCD display (not available in 8-DW GPU models). XClarity Controller (XCC) embedded management, XClarity Administrator centralized infrastructure delivery, XClarity Integrator plugins, and XClarity Energy Manager centralized server power management. Optional XClarity Controller Advanced and Enterprise to enable remote control functions.
Security features	Chassis intrusion switch, Power-on password, administrator's password, Trusted Platform Module (TPM), supporting TPM 2.0. In China only, optional Nationz TPM 2.0.
Operating systems supported	Microsoft Windows Server, Red Hat Enterprise Linux, SUSE Linux Enterprise Server, VMware ESXi. See the Operating system support section for specifics.
Limited warranty	Three-year or one-year (model dependent) customer-replaceable unit and onsite limited warranty with 9x5 next business day (NBD).
Service and support	Optional service upgrades are available through Lenovo Services: 4-hour or 2-hour response time, 6-hour fix time, 1-year or 2-year warranty extension, software support for Lenovo hardware and some third-party applications.
Dimensions	Width: 448 mm (17.6 in.), height: 131 mm (5.2 in.), depth: 892 mm (35.1 in.). SeePhysical and electrical specifications for details.
Weight	Approximate weight, dependent on the configuration selected: • SXM model: 39.5 kg (87 lb) • 4-DW GPU model: 36.7 kg (81 lb) • 8-DW GPU model: 39 kg (86 lb)

Models

ThinkSystem SR670 V2 models can be configured by using the Lenovo Data Center Solution Configurator (DCSC).

Configure-to-order (CTO) models are used to create models with factory-integrated server customizations. For CTO models, two base CTO models are available for the SR670 V2 as listed in the following table, CTO1WW and CTOLWW:

- The CTO1WW base CTO model is for general business and is selectable by choosing **General Purpose** mode in DCSC.
- The CTOLWW base model is intended for High Performance Computing (HPC) and Artificial Intelligence (AI) configurations and solutions, including configurations for Lenovo Scalable Infrastructure (LeSI), and is enabled using either the **HPC & AI LeSI Solutions** mode or **HPC & AI Hardware** mode in DCSC. CTOLWW configurations can also be built using System x and Cluster Solutions Configurator (x-config).

Preconfigured server models may also be available for the SR670 V2, however these are region-specific; that is, each region may define their own server models, and not all server models are available in every region.

The following table lists the base CTO models of the ThinkSystem SR670 V2 server.

Table 2. Base CTO models

Machine Type/Model General purpose	Machine Type/Model for HPC and AI	Description
7Z23CTO1WW	7Z23CTOLWW	ThinkSystem SR670 V2 – 3-year Warranty
7Z22CTO1WW	7Z22CTOLWW	ThinkSystem SR670 V2 – 1-year Warranty

Models of the SR670 V2 are defined based on the type of GPUs installed in the front portion of the server. For models, the feature codes for these chassis bases are as listed in the following table.

Table 3. Chassis base feature codes

Feature code	Description	Purpose
BFCV	ThinkSystem SR670 V2 HGX NVLink GPU Base	**SXM model** (4x SXM module GPUs with 8x 2.5-inch drive bays)
BFCX	ThinkSystem SR670 V2 4DW / 8SW PCIe GPU Base	**4-DW GPU model** (4x double-wide PCIe GPUs or 8x single-wide PCIe GPUs, with either 8x 2.5-inch drive bays or 4x 3.5-inch drive bays)
BFCW	ThinkSystem SR670 V2 8DW PCIe GPU Base	**8-DW GPU model** (8x double-wide PCIe GPUs with EDSFF drive bays)

Configurations

The SR670 V2 supports specific combinations of GPUs, riser cards and internal storage, as listed in the following table.

Additional combinations may be supported via the Special Bid process. Contact your Lenovo representative for more information.

Table 4. Supported configurations (OB = Onboard)

Cfg	Model	GPUs / risers	Front slots	Rear slots	OCP slot	Drive bays	Storage controller (Choose 1)	Drives (Choose 1)
1	SXM	4x SXM	2 (x16+x16)	No	No	8x 2.5-inch	• OB NVMe x32	• 8x NVMe
2	SXM	4x SXM	2 (x16+x16)	No	OCP x16	4x 2.5-inch	• OB NVMe x16	• 4x NVMe
3	8-DW GPU	8x DW / 2x Switched	2 (x16+x16)	No	OCP x8	6x EDSFF	• OB NVMe x24	• 6x EDSFF
4	8-DW GPU	8x DW / 2x Switched	No	2 (x16+x16)	OCP x8	6x EDSFF	• OB NVMe x24	• 6x EDSFF
5	4-DW GPU	4x DW or 8x SW / 1x Direct	2 (x16+x16)	No	No	8x 2.5-inch	• OB NVMe x32 + OB SATA	• 8x NVMe • 8x SATA • Combination up to 8x
7	4-DW GPU	44x DW or 8x SW / 1x Direct	No	2 (x16+x16)	No	4x 3.5-inch	• OB SATA • HBA/RAID card	• 4x 3.5" SATA
						8x 2.5-inch	• OB NVMe x32 + OB SATA • OB NVMe x32 + HBA/RAID card	• 8x NVMe • 8x SAS or SATA • Combination up to 8x
8	4-DW GPU	4x DW or 8x SW / 1x Direct	No	2 (x16+x8)	OCP x8	4x 3.5-inch	• OB SATA	• 4x SATA
						8x 2.5-inch	• OB NVMe x32 + OB SATA	• 8x NVMe • 8x SATA • Combination up to 8x
10	4-DW GPU	4x DW or 8x SW / 1x Direct	No	4 (x16+x16 x16+x8)	OCP x8	4x 3.5-inch	• OB SATA • HBA/RAID card	• 4x 3.5" SATA
						8x 2.5-inch	• OB SATA • HBA/RAID card • RAID Tri-Mode‡	• 8x U.3 NVMe‡ • 8x SAS or SATA • Combination up to 8x‡

‡ NVMe support in this configuration is only via a RAID 940-8i adapter with Tri-Mode enabled. Only U.3 NVMe drives supported, not U.2 NVMe.

Processors

The SR670 V2 supports processors in the third-generation Intel Xeon Scalable Processor family. The server supports two processors. A configuration of a single processor is not supported.

Topics in this section:

- Processor options
- Processor features
- UEFI operating modes

Processor options

The table below lists the processors that are supported.

Some processors include a suffix letter in the processor model number:

- M: Media Processing optimized
- N: NFV optimized
- P: High frequency-optimized for IaaS virtualization customers
- Q: Optimized for liquid cooling
- S: Large (512GB) SGX Enclave size
- T: High Tcase
- U: Single socket
- V: High density/low power-optimized for SaaS virtualization customers
- Y: Speed Select

Memory tiers: All processors support up to 6TB of memory. There are no L or M suffix processors.

Tip: In the SR670 V2, two processors are installed in the factory so there are no part numbers for field upgrades.

Table 5. Processor options

Feature code	Description	Quantity required
BB2N	Intel Xeon Silver 4309Y 8C 105W 2.8GHz Processor	2
BB3C	Intel Xeon Silver 4310 12C 120W 2.1GHz Processor	2
BB34	Intel Xeon Silver 4310T 10C 105W 2.3GHz Processor	2
BB2Z	Intel Xeon Silver 4314 16C 135W 2.4GHz Processor	2
BB39	Intel Xeon Silver 4316 20C 150W 2.3GHz Processor	2
BB3M	Intel Xeon Gold 5315Y 8C 140W 3.2GHz Processor	2
BB30	Intel Xeon Gold 5317 12C 150W 3.0GHz Processor	2
BB35	Intel Xeon Gold 5318Y 24C 165W 2.1GHz Processor	2
BB2R	Intel Xeon Gold 5320 26C 185W 2.2GHz Processor	2
BB2Y	Intel Xeon Gold 5320T 20C 150W 2.3GHz Processor	2
BB4E	Intel Xeon Gold 6326 16C 185W 2.9GHz Processor	2
BB3H	Intel Xeon Gold 6330 28C 205W 2.0GHz Processor	2
BB3D	Intel Xeon Gold 6334 8C 165W 3.6GHz Processor	2
BB3S	Intel Xeon Gold 6336Y 24C 185W 2.4GHz Processor	2
BB3P	Intel Xeon Gold 6338 32C 205W 2.0GHz Processor	2

Feature code	Description	Quantity required
BB33	Intel Xeon Gold 6338T 24C 165W 2.1GHz Processor	2
BB3B	Intel Xeon Gold 6342 24C 230W 2.8GHz Processor	2
BB2W	Intel Xeon Gold 6346 16C 205W 3.1GHz Processor	2
BB2L	Intel Xeon Gold 6348 28C 235W 2.6GHz Processor	2
BB2U	Intel Xeon Gold 6354 18C 205W 3.0GHz Processor	2
BKDB	Intel Xeon Platinum 8352M 32C 185W 2.3GHz Processor	2
BB2V	Intel Xeon Platinum 8352Y 32C 205W 2.2GHz Processor	2
BB3R	Intel Xeon Platinum 8358 32C 250W 2.6GHz Processor	2
BB3A	Intel Xeon Platinum 8358P 32C 240W 2.6GHz Processor	2
BB2P	Intel Xeon Platinum 8360Y 36C 250W 2.4GHz Processor	2
BKDC	Intel Xeon Platinum 8362 32C 265W 2.8GHz Processor	2
BB37	Intel Xeon Platinum 8368 38C 270W 2.4GHz Processor	2
BB3G	Intel Xeon Platinum 8380 40C 270W 2.3GHz Processor	2

Processor features

Supported processors have the following features:

- Third-generation Intel Xeon Scalable processors (formerly codenamed "Ice Lake")
- 10 nm process technology
- 8x DDR4 memory channels
- 64x PCIe 4.0 I/O lanes available for PCIe and NVMe devices
- 1.25 MB L2 cache per core
- 1.5 MB or more L3 cache per core
- Intel Deep Learning Boost, which provides built-in Artificial Intelligence (AI) acceleration with the Vector Neural Network Instruction set (VNNI). DL Boost and VNNI are designed to deliver significant, more efficient Deep Learning (Inference) acceleration for high-performance AI workloads.
- Intel Hyper-Threading Technology, which boosts performance for multithreaded applications by enabling simultaneous multithreading within each processor core, up to two threads per core.
- Intel Turbo Boost Technology 2.0, which allows processor cores to run at maximum speeds during peak workloads by temporarily going beyond processor TDP.
- Intel Virtualization Technology (includes VT-x and VT-d), which integrates hardware-level virtualization hooks that allow operating system vendors to better use the hardware for virtualization workloads.
- Intel Speed Select Technology, supported on some processor models, enables increased core Turbo Boost frequency on specific individual cores to maximize application performance.
- Intel Advanced Vector Extensions 512 (AVX-512), to enable acceleration of enterprise-class workloads, including databases and enterprise resource planning (ERP).
- Up to two Intel AVX-512 Fused-Multiply Add (FMA) units
- Intel SGX (Software Guard Extensions) and Intel TME (Total Memory Encryption) security features
- Two or three Intel Ultra Path Interconnect (UPI) links at up to 11.2 GT/s, to maximize inter-processor communication

The following table compares the features of the supported third-generation Intel Xeon processors.

Abbreviations used in the table:

- TB: Turbo Boost 2.0
- UPI: Ultra Path Interconnect
- TDP: Thermal Design Power
- SGX: Software Guard Extensions
- PMem: Persistent Memory support

Table 6. Processor features

CPU model	Cores/ threads	Core speed (Base / TB max)	L3 cache*	Max memory speed	UPI links & speed	TDP	SGX Enclave Size	Pmem
4309Y	8 / 16	2.8 GHz / 3.6 GHz	12 MB	2667 MHz	2 / 10.4 GT/s	105W	8 GB	No
4310	12 / 24	2.1 GHz / 3.3 GHz	18 MB	2667 MHz	2 / 10.4 GT/s	120W	8 GB	No
4310T	10 / 20	2.3 GHz / 3.4 GHz	15 MB	2667 MHz	2 / 10.4 GT/s	105W	8 GB	No
4314	16 / 32	2.4 GHz / 3.4 GHz	24 MB	2667 MHz	2 / 10.4 GT/s	135W	8 GB	Yes
4316	20 / 40	2.3 GHz / 3.4 GHz	30 MB	2667 MHz	2 / 10.4 GT/s	150W	8 GB	No
5315Y	8 / 16	3.2 GHz / 3.6 GHz	12 MB	2933 MHz	3 / 11.2 GT/s	140W	64 GB	Yes
5317	12 / 24	3.0 GHz / 3.6 GHz	18 MB	2933 MHz	3 / 11.2 GT/s	150W	64 GB	Yes
5318Y	24 / 48	2.1 GHz / 3.4 GHz	36 MB	2933 MHz	3 / 11.2 GT/s	165W	64 GB	Yes
5320	26 / 52	2.2 GHz / 3.4 GHz	39 MB	2933 MHz	3 / 11.2 GT/s	185W	64 GB	Yes
5320T	20 / 40	2.3 GHz / 3.5 GHz	30 MB	2933 MHz	3 / 11.2 GT/s	150W	64 GB	Yes
6326	16 / 32	2.9 GHz / 3.5 GHz	24 MB	3200 MHz	3 / 11.2 GT/s	185W	64 GB	Yes
6330	28 / 56	2.0 GHz / 3.1 GHz	42 MB	2933 MHz	3 / 11.2 GT/s	205W	64 GB	Yes
6334	8 / 16	3.6 GHz / 3.7 GHz	18 MB*	3200 MHz	3 / 11.2 GT/s	165W	64 GB	Yes
6336Y	24 / 48	2.4 GHz / 3.6 GHz	36 MB	3200 MHz	3 / 11.2 GT/s	185W	64 GB	Yes
6338	32 / 64	2.0 GHz / 3.2 GHz	48 MB	3200 MHz	3 / 11.2 GT/s	205W	64 GB	Yes
6338T	24 / 48	2.1 GHz / 3.4 GHz	36 MB	3200 MHz	3 / 11.2 GT/s	165W	64 GB	Yes
6342	24 / 48	2.8 GHz / 3.5 GHz	36 MB	3200 MHz	3 / 11.2 GT/s	230W	64 GB	Yes
6346	16 / 32	3.1 GHz / 3.6 GHz	36 MB*	3200 MHz	3 / 11.2 GT/s	205W	64 GB	Yes
6348	28 / 56	2.6 GHz / 3.5 GHz	42 MB	3200 MHz	3 / 11.2 GT/s	235W	64 GB	Yes
6354	18 / 36	3.0 GHz / 3.6 GHz	39 MB*	3200 MHz	3 / 11.2 GT/s	205W	64 GB	Yes
8352M	32 / 64	2.3 GHz / 3.5 GHz	48 MB	3200 MHz	3 / 11.2 GT/s	185W	64 GB	Yes
8352Y	32 / 64	2.2 GHz / 3.4 GHz	48 MB	3200 MHz	3 / 11.2 GT/s	205W	64 GB	Yes
8358	32 / 64	2.6 GHz / 3.4 GHz	48 MB	3200 MHz	3 / 11.2 GT/s	250W	64 GB	Yes
8358P	32 / 64	2.6 GHz / 3.4 GHz	48 MB	3200 MHz	3 / 11.2 GT/s	240W	8 GB	Yes
8360Y	36 / 72	2.4 GHz / 3.5 GHz	54 MB	3200 MHz	3 / 11.2 GT/s	250W	64 GB	Yes
8362	32 / 64	2.8 GHz / 3.6 GHz	48 MB	3200 MHz	3 / 11.2 GT/s	265W	64 GB	Yes
8368	38 / 76	2.4 GHz / 3.4 GHz	57 MB	3200 MHz	3 / 11.2 GT/s	270W	512 GB	Yes
8380	40 / 80	2.3 GHz / 3.4 GHz	60 MB	3200 MHz	3 / 11.2 GT/s	270W	512 GB	Yes

* L3 cache is 1.5 MB per core or larger. Processors with a larger L3 cache per core are marked with an *

UEFI operating modes

The SR670 V2 offers preset operating modes that affect energy consumption and performance. These modes are a collection of predefined low-level UEFI settings that simplify the task of tuning the server to suit your business and workload requirements.

The following table lists the feature codes that allow you to specify the mode you wish to preset in the factory for CTO orders.

Table 7. UEFI operating mode presets in DCSC

Feature code	Description
BFYB	Operating mode selection for: "Maximum Performance Mode"
BFYC	Operating mode selection for: "Minimal Power Mode"
BFYD	Operating mode selection for: "Efficiency Favoring Power Savings Mode"
BFYE	Operating mode selection for: "Efficiency - Favoring Performance Mode"

The preset modes for the SR670 V2 are as follows:

- **Maximum Performance Mode** (feature BFYB): Achieves maximum performance but with higher power consumption and lower energy efficiency.
- **Minimal Power Mode** (feature BFYC): Minimize the absolute power consumption of the system.
- **Efficiency Favoring Power Savings Mode** (feature BFYD): Maximize the performance/watt efficiency with a bias towards power savings. This is the favored mode for SPECpower benchmark testing, for example.
- **Efficiency Favoring Performance Mode** (feature BFYE): Maximize the performance/watt efficiency with a bias towards performance. This is the favored mode for Energy Star certification, for example.

For details about these preset modes, and all other performance and power efficiency UEFI settings offered in the SR670 V2, see the paper "Tuning UEFI Settings for Performance and Energy Efficiency on Intel Xeon Scalable Processor-Based ThinkSystem Servers", available from https://lenovopress.lenovo.com/lp1477.

Memory options

The SR670 V2 uses Lenovo TruDDR4 memory and supports 16 DIMMs per processor or 32 DIMMs with two processors installed. Each processor has eight memory channels with two DIMMs per channel. With 256 GB 3DS RDIMMs installed, the SR670 V2 supports a total of 8 TB of system memory.

The SR670 V2 also supports Intel Optane Persistent Memory 200 Series, as described in the Persistent Memory section.

Memory operates at up to 3200 MHz at two DIMMs per channel, depending on the memory DIMMs and processor model selected. If the processor selected has a lower memory bus speed, then all DIMMs will operate at that lower speed.

The following table lists the memory options that are available for the server.

Lenovo TruDDR4 memory uses the highest quality components that are sourced from Tier 1 DRAM suppliers and only memory that meets the strict requirements of Lenovo is selected. It is compatibility tested and tuned to maximize performance and reliability. From a service and support standpoint, Lenovo TruDDR4 memory automatically assumes the system warranty, and Lenovo provides service and support worldwide.

Table 8. Memory options

Part number	Feature code	Description	Maximum supported
RDIMMs			
4X77A08632	B963	ThinkSystem 16GB TruDDR4 3200MHz (2Rx8 1.2V) RDIMM	32 (16 per processor)
4X77A08633	B964	ThinkSystem 32GB TruDDR4 3200MHz (2Rx4 1.2V) RDIMM	32 (16 per processor)
4X77A08634	B965	ThinkSystem 32GB TruDDR4 3200MHz (2Rx8 1.2V) RDIMM	32 (16 per processor)
4X77A08635	B966	ThinkSystem 64GB TruDDR4 3200MHz (2Rx4 1.2V) RDIMM	32 (16 per processor)
3DS RDIMMs			
4X77A08636	BA62	ThinkSystem 128GB TruDDR4 3200 MHz (2S2Rx4 1.2V) 3DS RDIMM	32 (16 per processor)

The following rules apply when selecting the memory configuration:

- The following DIMM quantities are supported per processor: 1, 2, 4, 6, 8, 12, and 16. Other quantities per processor are not supported.
- The server supports RDIMMs and 3DS RDIMMs; UDIMMs and LRDIMMs are not supported
- Mixing RDIMMs and 3DS RDIMMs is not supported
- Mixing x4 and x8 DIMMs is supported

For best performance, consider the following:

- Populate memory DIMMs in quantities of 8 or 16 per processor, so that all memory channels are used.
- Populate memory channels so they all have the same total memory capacity.
- Ensure all memory controllers on a processor socket have the same DIMM configuration.
- All processor sockets on the same physical server should have the same DIMM configuration.

The following memory protection technologies are supported:

- ECC
- SDDC (for x4-based memory DIMMs; look for "x4" in the DIMM description)
- ADDDC (for x4-based memory DIMMs)
- Memory mirroring

Note: Memory sparing is not supported

If memory channel mirroring is used, then DIMMs must be installed in pairs or sets of three (minimum of one pair or set of three per processor), and all DIMMs in the pair or set of three must be identical in type and size. 50% of the installed capacity is available to the operating system. Memory rank sparing is not supported.

Persistent memory

The SR670 V2 server supports Intel Optane Persistent Memory 200 Series, a new class of memory and storage technology explicitly architected for data center usage. Persistent memory is an innovative technology that delivers a unique combination of affordable large memory capacity and persistence (non-volatility). It offers significantly lower latency than fetching data from SSDs, even NVMe SSDs, and offers higher capacities than system memory.

Persistent memory technology can help boost the performance of data-intensive applications such as in-memory analytics, databases, content delivery networks, and high performance computing (HPC), as well as deliver consistent service levels at scale with higher virtual machine and container density. When data is stored closer to the processor on nonvolatile media, applications can see significant overall improvement in performance.

The following table lists the ordering information for the supported persistent memory modules.

Table 9. Persistent memory module part numbers

Part number	Feature code	Description	Maximum supported
4ZC7A08732	B98B	ThinkSystem 128GB TruDDR4 3200MHz (1.2V) Intel Optane Persistent Memory	16 (8 per processor)

The following are the requirements when installing persistent memory (PMem) modules when installed in a two-socket server with third-generation Intel Xeon Scalable processors ("Ice Lake" processors):

- App Direct Mode and Memory Mode are supported. Mixed Mode is not supported.
- All PMem modules operate at 3200 MHz when the installed processor runs the memory bus at 3200 MHz.
- All installed PMem modules must be the same size. Mixing PMem modules of different capacities is not supported.
- Maximum 8 PMem modules per processor (install 1 in each memory channel).
- For each memory channel with both a PMem module and a memory DIMM installed, the PMem module is installed in channel slot 1 (DIMM1, closer to the processor) and the DIMM is installed in channel slot 0 (DIMM0).
- To maximize performance, balance all memory channels
- Both interleaved and non-interleaved modes are supported.
- Memory mirroring is not supported with PMem modules installed

For details, including App Direct Mode and Memory Mode configuration requirements, see the Intel Optane Persistent Memory 200 Series product guide, https://lenovopress.com/LP1380

Internal storage

The SR670 V2 supports drives at the front of the server as shown in the Components and connectors section. The choice of drive bays depends on the GPU configuration selected, as described in the the Configurations section:

- SXM model - choice of:
  - 4x 2.5-inch hot-swap NVMe drive bays
  - 8x 2.5-inch hot-swap NVMe drive bays
- 4-DW GPU model - choice of:
  - 8x 2.5-inch hot-swap AnyBay drive bays supporting SAS, SATA or NVMe drives
  - 4x 3.5-inch hot-swap drive bays supporting SATA HDDs or SSDs drives (support for NVMe only via Special Bid)
- 8-DW GPU model:
  - 6x EDSFF E1.S hot-swap NVMe drive bays

All drives are hot-swap and are accessible from the front of the server.

Where NVMe drives are supported, they are all connected using four PCIe lanes which means there is no NVMe oversubscription.

The server also supports one or two M.2 drives for OS boot functions, installed in an M.2 adapter internal to the server.

In this section:

- Backplanes
- RAID flash power module (supercap) support
- M.2 drives
- EDSFF drives

Backplanes

The backplanes used to provide the drive bays are listed in the following table. The table lists the feature codes for ordering CTO - the required cables are derived by the configurator.

The table also lists the option part numbers for field upgrades. Part numbers include:

- Backplane
- Drive bay fillers
- Data cables to connect drives to controllers
- Power cables

Table 10. Backplanes for drive bays

Part number	Feature code	Description	Maximum supported
SXM model			
4XB7A69400	BHD6	ThinkSystem SR670 V2 4x2.5" NVMe Backplane	2
4-DW GPU model			
4XB7A69396	BH8B	ThinkSystem SR670 V2 8x2.5" SAS/SATA/NVMe Backplane	
4XB7A69397	BA5R	ThinkSystem SR670 V2 4x3.5" SAS/SATA/NVMe Backplane	1
8-DW GPU model			
4XB7A69395	BFTQ	ThinkSystem SR670 V2 6xEDSFF NVMe Backplane	1

RAID flash power module (supercap) support

If you plan to add one of the RAID adapters that includes a RAID flash power module (supercap) as a field upgrade, then you will also need to order a Supercap installation kit for the supercap. For CTO orders, the components needed are automatically derived when you select the RAID adapter.

The SR670 V2 supports at most one supercap, and by extension, only supports one of these adapters.

The RAID adapters that require a supercap holder are as follows:

- ThinkSystem RAID 930-8i 2GB Flash PCIe 12Gb Adapter
- ThinkSystem RAID 940-8i 4GB Flash PCIe Gen4 12Gb Adapter
- ThinkSystem RAID 940-8i 8GB Flash PCIe Gen4 12Gb Adapter
- ThinkSystem RAID 930-8e 4GB Flash PCIe 12Gb Adapter

The supercap mounts in a bracket that goes into the top slot of a rear PCIe riser. Ordering information is in the following table.

Table 11. Supercap holder

Part number	Feature	Description	Maximum supported
CTO only	BFH0	ThinkSystem SR670 V2 Supercap Holder	1

M.2 drives

The SR670 V2 supports one or two M.2 form-factor SATA or NVMe drives for use as an operating system boot solution or as additional storage. The M.2 drives install into an M.2 module which is mounted horizontally in the server in the air baffle.

There are three different M.2 modules supported, as listed in the following table.

Table 12. M.2 modules

Part number	Feature code	Description	SATA drives	NVMe drives	RAID	Maximum supported
4Y37A09739	B5XH	ThinkSystem M.2 SATA 2-Bay RAID Enablement Kit	Yes	No	Yes	1
4Y37A09750	B8P9	ThinkSystem M.2 NVMe 2-Bay RAID Enablement Kit	No	Yes	Yes	1
4Y37A09738	B5XJ	ThinkSystem M.2 SATA/NVMe 2-Bay Enablement Kit	Yes	Yes	VROC	1

Supported drives are listed in the Internal drive options section.

The M.2 SATA 2-Bay RAID Enablement Kit has the following features:

- Supports one or two SATA M.2 drives
- Support 42mm, 60mm, 80mm and 110mm drive form factors (2242, 2260, 2280 and 22110)
- RAID support via an onboard Marvell 88SE9230 SATA RAID Controller
- Support JBOD, RAID-0 and RAID-1 (RAID support requires two M.2 drives)
- PCIe 2.0 x2 host interface; 6Gbps SATA connection to the drives
- Management and configuration support via UEFI and OS-based tools
- Supports monitoring and reporting of events and temperature through I2C
- Firmware update via Lenovo firmware update tools

The M.2 NVMe 2-Bay RAID Enablement Kit has the following features:

- Supports one or two NVMe M.2 drives
- Support 42mm, 60mm, 80mm and 110mm drive form factors (2242, 2260, 2280 and 22110)
- RAID support via an onboard Marvell 88NR2241 NVMe RAID Controller
- With 1 drive, supports single-drive RAID-0
- With 2 drives, supports 2-drive RAID-0, 2-drive RAID-1, or two single-drive RAID-0 arrays
- PCIe 3.0 x2 host interface; PCIe 3.0 x1 connection to each drive
- Management and configuration support via UEFI and OS-based tools
- Supports monitoring and reporting of events and temperature through I2C
- Firmware update via Lenovo firmware update tools

The M.2 SATA/NVMe 2-Bay Enablement Kit has the following features:

- Supports one or two M.2 drives, either SATA or NVMe
- When two drives installed, they must be either both SATA or both NVMe
- Support 42mm, 60mm, 80mm and 110mm drive form factors (2242, 2260, 2280 and 22110)
- JBOD native support; no built-in RAID support (RAID can be enabled via Intel VROC)
- Either 6Gbps SATA or PCIe 3.0 x1 interface to the drives depending on the drives installed
- Supports monitoring and reporting of events and temperature through I2C
- Firmware update via Lenovo firmware update tools

For field upgrades, the SR670 V2 also requires an additional M.2 cable kit. Ordering information is listed in the following table.

Table 13. M.2 Cable for field upgrades

Part number	Description
4X97A69394	ThinkSystem SR670 V2/ SR675 V3/ SN550 V2 M.2 SATA/NVMe Cable • M.2 Signal & Power Cable

For further details about M.2 components, see the *ThinkSystem M.2 Drives and M.2 Adapters* product guide:
https://lenovopress.com/lp0769-thinksystem-m2-drives-adapters

EDSFF drives

The 8-DW GPU model of the SR670 V2 supports EDSFF (Enterprise & Datacenter SSD Form Factor) drives with the E1.S (short) form factor. Up to 6 hot-swap EDSFF drives can be installed in the server.

EDSFF drives are a new type of NVMe solid-state drive and have the following characteristics:

- NVMe SSD with PCIe 4.0 x4 host interface
- Hot-swap drive tray
- E1.S form factor defined by SNIA specification SFF-TA-1006
- 112 mm (4.4 inches) long x 32 mm (1.2 inches) tall

The SR670 V2 in the 8-DW GPU configuration supports 6x EDSFF drives, as shown in the following figure.

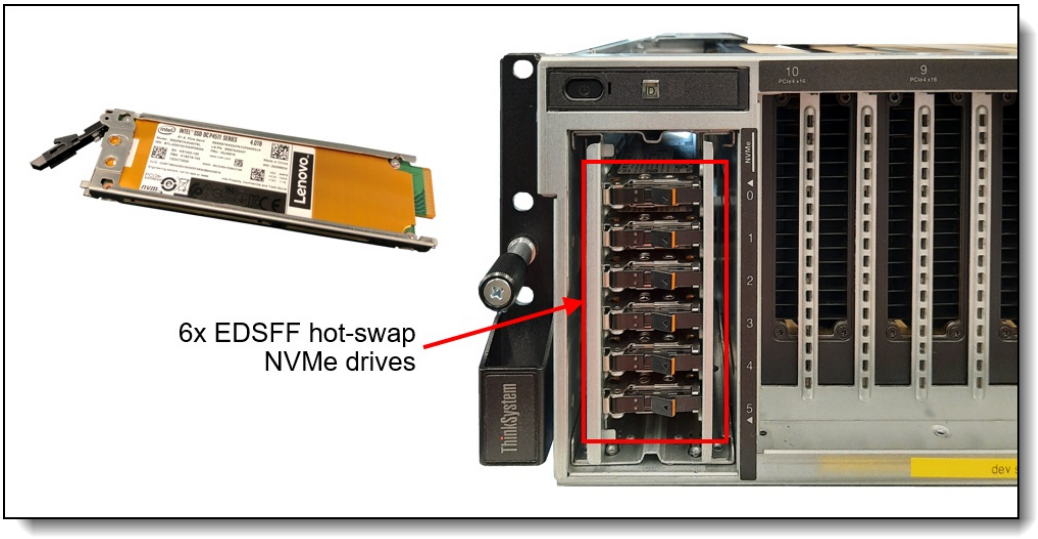

Figure 14. SR670 V2 EDSFF drive bays (8-DW GPU configuration only)

Controllers for internal storage

The SR670 V2 offers a variety of controller options for internal drives:

- For front-mount drives:
  - Onboard SATA ports with software RAID support (Intel VROC SATA RAID, formerly known as Intel RSTe)
  - Onboard NVMe ports with software RAID support (Intel VROC NVMe RAID)
  - RAID adapters and HBAs for SAS/SATA drives (PCIe slot-based)
- For M.2 drives internal to the server (see M.2 drives section)
  - SATA controller integrated on the M.2 SATA 2-Bay RAID Enablement Kit
  - NVMe controller integrated on the M.2 NVMe 2-Bay RAID Enablement Kit

The following table lists the adapters used for the internal storage of the server.

Table 14. Internal Storage adapter support

Part number	Feature code	Description	Power module (supercap)	Maximum supported
Onboard SATA - Intel VROC SATA RAID (Intel RSTe)				
None	AVV0	On Board SATA Software RAID Mode	No	1
Onboard NVMe - Intel VROC NVMe RAID				
None	B9X7	Intel VROC (VMD NVMe RAID) Intel SSD Only (Standard)	No	1
4L47A39164	B96G	Intel VROC (VMD NVMe RAID) Premium (license upgrade - to enable RAID support for non-Intel NVMe SSDs)	No	1
SAS/SATA RAID				
4Y37A72482	BJHK	ThinkSystem RAID 5350-8i PCIe 12Gb Adapter	No	1
7Y37A01082	AUNG	ThinkSystem RAID 530-8i PCIe 12Gb Adapter	No	1
4Y37A78834	BMFT	ThinkSystem RAID 540-8i PCIe Gen4 12Gb Adapter	No	1
7Y37A01084	AUNJ	ThinkSystem RAID 930-8i 2GB Flash PCIe 12Gb Adapter	Included	1

Part number	Feature code	Description	Power module (supercap)	Maximum supported
4Y37A09728	B8NY	ThinkSystem RAID 940-8i 4GB Flash PCIe Gen4 12Gb Adapter	Included	1
4Y37A09729	B8NW	ThinkSystem RAID 940-8i 8GB Flash PCIe Gen4 12Gb Adapter	Included	1
SAS/SATA HBA				
4Y37A72480	BJHH	ThinkSystem 4350-8i SAS/SATA 12Gb HBA	No	1
7Y37A01088	AUNL	ThinkSystem 430-8i SAS/SATA 12Gb HBA	No	1
4Y37A78601	BM51	ThinkSystem 440-8i SAS/SATA PCIe Gen4 12Gb HBA	No	1
NVMe adapters				
4Y37A09728†	BGM1	ThinkSystem RAID 940-8i 4GB Flash PCIe Gen4 12Gb Adapter for U.3 (Tri-Mode support)	Included	1
4Y37A09729†	BGM0	ThinkSystem RAID 940-8i 8GB Flash PCIe Gen4 12Gb Adapter for U.3 (Tri-Mode support)	Included	1

† Adapter also supports PCIe 4.0 x1 connectivity to NVMe drives (requires NVMe drives with U.3 interface)

For specifications about the RAID adapters and HBAs supported by the SR670 V2, see the ThinkSystem RAID Adapter and HBA Comparison, available from: https://lenovopress.com/lp1288-lenovo-thinksystem-raid-adapter-and-hba-reference#sr670-v2-support=SR670%2520V2

Configuration notes:

- **Supercap support**: The table lists whether the adapter includes a power module (supercap) to power the flash memory. The server supports only 1 supercap as described in the RAID flash power module (supercap) support section. The number of supercaps supported also determines the maximum number of RAID adapters with flash that can be installed in the server, both for internal drive connectivity and external drive connectivity.
- **Field upgrades**: If you are adding a RAID adapter with supercap to the server as a field upgrade, you may need a supercap holder as described in the RAID flash power module (supercap) support section.
- **E810 Ethernet and X350 RAID/HBAs**: The use of both an Intel E810 network adapter and an X350 HBA/RAID adapter (9350, 5350 and 4350) is currently not supported in ThinkSystem servers. For details see Support Tip HT513226. Planned support for this combination of adapters is 4Q/2023 (SI 23-2).

The RAID 940-8i and RAID 940-16i adapters also support NVMe through a feature named Tri-Mode support (or Trimode support). This feature enables the use of NVMe U.3 drives at the same time as SAS and SATA drives. Cabling of the controller to the backplanes is the same as with SAS/SATA drives, and the NVMe drives are connected via a PCIe x1 link to the controller.

NVMe drives connected using Tri-Mode support provide better performance than SAS or SATA drives: A SATA SSD has a data rate of 6Gbps, a SAS SSD has a data rate of 12Gbps, whereas an NVMe U.3 Gen 4 SSD with a PCIe x1 link will have a data rate of 16Gbps. NVMe drives typically also have lower latency and higher IOPS compared to SAS and SATA drives. Tri-Mode is supported with U.3 NVMe drives in either 2.5-inch and 3.5-inch form factor and requires an AnyBay backplane.

Tri-Mode requires U.3 drives: Only NVMe drives with a U.3 interface are supported. U.2 drives are not supported. See the Internal drive options section for the U.3 drives supported by the server.

The onboard SATA controller has the following features:

- Controller integrated into the Intel PCH
- 6 Gbps SATA host interface
- Supports RAID-0, 1, 5, 10 (Intel VROC SATA RAID, previously known as RSTe)
- Supports JBOD
- Supports HDDs and SSDs; can be mixed

The onboard NVMe support has the following features:

- Controller integrated into the Intel processor
- Each drive has PCIe 4.0 x4 host interface
- Supports JBOD - Intel and non-Intel NVMe SSDs - no license required
- Supports RAID-0, 1, 5, 10 (Intel VROC NVMe RAID) - Intel NVMe SSDs only unless VROC Premium license is installed

Intel VROC onboard RAID

Intel VROC (Virtual RAID on CPU) is a feature of the Intel processor that enables RAID support.

There are two separate functions of VROC in the SR670 V2:

- Intel VROC SATA RAID, formerly known as Intel RSTe
- Intel VROC NVMe RAID

VROC SATA RAID (RSTe) is available and supported with all SATA drives, both SATA SSDs and SATA HDDs. It offers a 6 Gb/s connection to each drive and on the SR670 V2 implements RAID levels 0, 1, 5, and 10. RAID 1 is limited to 2 drives per array, and RAID 10 is limited to 4 drives per array. Hot-spare functionality is also supported.

VROC NVMe RAID offers RAID support for any NVMe drives directly connected to the ports on the server's system board or via adapters such as NVMe retimers or NVMe switch adapters. On the SR670 V2, it implements RAID levels 0, 1, 10 and optionally RAID 5. RAID 1 is limited to 2 drives per array, and RAID 10 is limited to 4 drives per array. Hot-spare functionality is also supported.

Performance tip: For best performance with VROC NVMe RAID, the drives in an array should all be connected to the same processor. Spanning processors is possible however performance will be unpredictable and should be evaluated based on your workload.

The SR670 V2 supports the VROC NVMe RAID offerings listed in the following table. The VROC Intel SSD Only offering only supports RAID on Intel branded NVMe SSDs; non-Intel branded NVMe SSDs cannot be configured in a RAID array. The VROC Standard offering supports RAID 0, 1, and 10, however RAID 5 is not supported.

Tip: These feature codes and part numbers are only for VROC RAID using NVMe drives, not SATA drives

Table 15. VROC subsection

Part number	Feature code	Description	Intel SSDs	Non-Intel SSDs	RAID 0	RAID 1	RAID 10	RAID 5
CTO only	B9X7	Intel VROC (VMD NVMe RAID) Intel SSD Only	Yes	No	Yes	Yes	Yes	Yes
4L47A83669	BR9B	Intel VROC (VMD NVMe RAID) Standard	Yes	Yes	Yes	Yes	Yes	No
4L47A39164	B96G	Intel VROC (VMD NVMe RAID) Premium	Yes	Yes	Yes	Yes	Yes	Yes

The part number(s) listed in the table enables field upgrades. These are fulfilled as a Feature on Demand (FoD) license and is activated via the XCC management processor user interface.

Virtualization support: Virtualization support for Intel VROC is as follows:

- **VROC SATA RAID (RSTe)**: VROC SATA RAID is not supported by virtualization hypervisors such as ESXi, KVM, Xen, and Hyper-V. Virtualization is only supported on the onboard SATA ports in AHCI (non-RAID) mode.
- **VROC (VMD) NVMe RAID**: VROC (VMD) NVMe RAID is supported by ESXi, KVM, Xen, and Hyper-V. ESXi support is limited to RAID 1 only; other RAID levels are not supported. Windows and Linux OSes support VROC RAID NVMe, both for host boot functions and for guest OS function, and RAID-0, 1, 5, and 10 are supported.

For details about these adapters, see the relevant product guide:

- SAS HBAs: https://lenovopress.com/servers/options/hba
- RAID adapters: https://lenovopress.com/servers/options/raid

Internal drive options

The following tables list the drive options for internal storage of the server.

2.5-inch hot-swap drives:

- 2.5-inch hot-swap 6 Gb SATA HDDs
- 2.5-inch hot-swap 24 Gb SAS SSDs
- 2.5-inch hot-swap 12 Gb SAS SSDs
- 2.5-inch hot-swap 6 Gb SATA SSDs
- 2.5-inch hot-swap PCIe 4.0 NVMe SSDs
- 2.5-inch hot-swap PCIe 3.0 NVMe SSDs

EDSFF hot-swap drives:

- E1.S EDSFF hot-swap PCIe 4.0 NVMe SSDs

3.5-inch hot-swap drives:

- 3.5-inch hot-swap 6 Gb SATA HDDs
- 3.5-inch hot-swap 6 Gb SATA SSDs

M.2 drives:

- M.2 SATA drives
- M.2 PCIe 4.0 NVMe drives
- M.2 PCIe 3.0 NVMe drives

M.2 drive support: The use of M.2 drives requires an additional adapter as described in the M.2 drives subsection.

SED support: The tables include a column to indicate which drives support SED encryption. The encryption functionality can be disabled if needed. Note: Not all SED-enabled drives have "SED" in the description.

Table 16. 2.5-inch hot-swap 6 Gb SATA HDDs

Part number	Feature code	Description	SED support	Max Qty
2.5-inch hot-swap HDDs - 6 Gb NL SATA				
7XB7A00036	AUUE	ThinkSystem 2.5" 1TB 7.2K SATA 6Gb Hot Swap 512n HDD	No	8
7XB7A00037	AUUJ	ThinkSystem 2.5" 2TB 7.2K SATA 6Gb Hot Swap 512e HDD	No	8

Table 17. 2.5-inch hot-swap 24 Gb SAS SSDs

Part number	Feature code	Description	SED support	Max Qty
2.5-inch hot-swap SSDs - 24 Gb SAS - Mixed Use/Mainstream (3-5 DWPD)				
4XB7A80340	BNW8	ThinkSystem 2.5" PM1655 800GB Mixed Use SAS 24Gb HS SSD	Support	8
4XB7A80341	BNW9	ThinkSystem 2.5" PM1655 1.6TB Mixed Use SAS 24Gb HS SSD	Support	8
4XB7A80342	BNW6	ThinkSystem 2.5" PM1655 3.2TB Mixed Use SAS 24Gb HS SSD	Support	8
4XB7A80343	BP3K	ThinkSystem 2.5" PM1655 6.4TB Mixed Use SAS 24Gb HS SSD	Support	8
2.5-inch hot-swap SSDs - 24 Gb SAS - Read Intensive/Entry/Capacity (<3 DWPD)				
4XB7A80318	BNWC	ThinkSystem 2.5" PM1653 960GB Read Intensive SAS 24Gb HS SSD	Support	8
4XB7A80319	BNWE	ThinkSystem 2.5" PM1653 1.92TB Read Intensive SAS 24Gb HS SSD	Support	8
4XB7A80320	BNWF	ThinkSystem 2.5" PM1653 3.84TB Read Intensive SAS 24Gb HS SSD	Support	8
4XB7A80321	BP3E	ThinkSystem 2.5" PM1653 7.68TB Read Intensive SAS 24Gb HS SSD	Support	8
4XB7A80322	BP3J	ThinkSystem 2.5" PM1653 15.36TB Read Intensive SAS 24Gb HS SSD	Support	8
4XB7A80323	BP3D	ThinkSystem 2.5" PM1653 30.72TB Read Intensive SAS 24Gb HS SSD	Support	8

Table 18. 2.5-inch hot-swap 12 Gb SAS SSDs

Part number	Feature code	Description	SED support	Max Qty
2.5-inch hot-swap SSDs - 12 Gb SAS - Write Intensive/Performance (10+ DWPD)				
4XB7A83214	BR10	ThinkSystem 2.5" Nytro 3750 400GB Write Intensive SAS 12Gb HS SSD	Support	8
4XB7A83215	BR0Z	ThinkSystem 2.5" Nytro 3750 800GB Write Intensive SAS 12Gb HS SSD	Support	8
4XB7A83216	BR0Y	ThinkSystem 2.5" Nytro 3750 1.6TB Write Intensive SAS 12Gb HS SSD	Support	8
4XB7A83217	BR0X	ThinkSystem 2.5" Nytro 3750 3.2TB Write Intensive SAS 12Gb HS SSD	Support	8
4XB7A70003	BG04	ThinkSystem 2.5" Nytro 3732 3.2TB Performance SAS 12Gb Hot Swap SSD	No	8
2.5-inch hot-swap SSDs - 12 Gb SAS - Mixed Use/Mainstream (3-5 DWPD)				
4XB7A17064	B8JD	ThinkSystem 2.5" PM1645a 3.2TB Mainstream SAS 12Gb Hot Swap SSD	No	8
4XB7A17065	B8JA	ThinkSystem 2.5" PM1645a 6.4TB Mainstream SAS 12Gb Hot Swap SSD	No	8
2.5-inch hot-swap SSDs - 12 Gb SAS - Read Intensive/Entry/Capacity (<3 DWPD)				
4XB7A17055	B91D	ThinkSystem 2.5" PM1643a 7.68TB Entry SAS 12Gb Hot Swap SSD	No	8
4XB7A17056	BC4R	ThinkSystem 2.5" PM1643a 15.36TB Entry SAS 12Gb Hot Swap SSD	No	8

Table 19. 2.5-inch hot-swap 6 Gb SATA SSDs

Part number	Feature code	Description	SED support	Max Qty
2.5-inch hot-swap SSDs - 6 Gb SATA - Mixed Use/Mainstream (3-5 DWPD)				
4XB7A82289	BQ21	ThinkSystem 2.5" 5400 MAX 480GB Mixed Use SATA 6Gb HS SSD	Support	8
4XB7A82290	BQ24	ThinkSystem 2.5" 5400 MAX 960GB Mixed Use SATA 6Gb HS SSD	Support	8
4XB7A82291	BQ22	ThinkSystem 2.5" 5400 MAX 1.92TB Mixed Use SATA 6Gb HS SSD	Support	8
4XB7A82292	BQ23	ThinkSystem 2.5" 5400 MAX 3.84TB Mixed Use SATA 6Gb HS SSD	Support	8
4XB7A17125	BA7Q	ThinkSystem 2.5" S4620 480GB Mixed Use SATA 6Gb HS SSD	No	8
4XB7A17126	BA4T	ThinkSystem 2.5" S4620 960GB Mixed Use SATA 6Gb HS SSD	No	8
4XB7A17127	BA4U	ThinkSystem 2.5" S4620 1.92TB Mixed Use SATA 6Gb HS SSD	No	8
4XB7A17128	BK7L	ThinkSystem 2.5" S4620 3.84TB Mixed Use SATA 6Gb HS SSD	No	8
4XB7A17090	B8JE	ThinkSystem 2.5" 5300 1.92TB Mainstream SATA 6Gb Hot Swap SSD	No	8
4XB7A13637	B49Q	ThinkSystem 2.5" S4610 3.84TB Mixed Use SATA 6Gb HS SSD	No	8
2.5-inch hot-swap SSDs - 6 Gb SATA - Read Intensive/Entry (<3 DWPD)				
4XB7A87524	BWKN	ThinkSystem 2.5" PM893a 480GB Read Intensive SATA 6Gb HS SSD	Support	8
4XB7A87525	BWKM	ThinkSystem 2.5" PM893a 960GB Read Intensive SATA 6Gb HS SSD	Support	8
4XB7A87526	BWKL	ThinkSystem 2.5" PM893a 1.92TB Read Intensive SATA 6Gb HS SSD	Support	8
4XB7A87527	BWKK	ThinkSystem 2.5" PM893a 3.84TB Read Intensive SATA 6Gb HS SSD	Support	8
4XB7A82258	BQ1Q	ThinkSystem 2.5" 5400 PRO 240GB Read Intensive SATA 6Gb HS SSD	Support	8

Part number	Feature code	Description	SED support	Max Qty
4XB7A82259	BQ1P	ThinkSystem 2.5" 5400 PRO 480GB Read Intensive SATA 6Gb HS SSD	Support	8
4XB7A82260	BQ1R	ThinkSystem 2.5" 5400 PRO 960GB Read Intensive SATA 6Gb HS SSD	Support	8
4XB7A82261	BQ1X	ThinkSystem 2.5" 5400 PRO 1.92TB Read Intensive SATA 6Gb HS SSD	Support	8
4XB7A82262	BQ1S	ThinkSystem 2.5" 5400 PRO 3.84TB Read Intensive SATA 6Gb HS SSD	Support	8
4XB7A82263	BQ1T	ThinkSystem 2.5" 5400 PRO 7.68TB Read Intensive SATA 6Gb HS SSD	Support	8
4XB7A72438	BM8B	ThinkSystem 2.5" PM893 480GB Read Intensive SATA 6Gb HS SSD	No	8
4XB7A72439	BM8A	ThinkSystem 2.5" PM893 960GB Read Intensive SATA 6Gb HS SSD	No	8
4XB7A72440	BM89	ThinkSystem 2.5" PM893 1.92TB Read Intensive SATA 6Gb HS SSD	No	8
4XB7A72441	BM88	ThinkSystem 2.5" PM893 3.84TB Read Intensive SATA 6Gb HS SSD	No	8
4XB7A72442	BM87	ThinkSystem 2.5" PM893 7.68TB Read Intensive SATA 6Gb HS SSD	No	8
4XB7A17072	B99D	ThinkSystem 2.5" S4520 240GB Read Intensive SATA 6Gb HS SSD	No	8
4XB7A17101	BA7G	ThinkSystem 2.5" S4520 480GB Read Intensive SATA 6Gb HS SSD	No	8
4XB7A17102	BA7H	ThinkSystem 2.5" S4520 960GB Read Intensive SATA 6Gb HS SSD	No	8
4XB7A17103	BA7J	ThinkSystem 2.5" S4520 1.92TB Read Intensive SATA 6Gb HS SSD	No	8
4XB7A17104	BK77	ThinkSystem 2.5" S4520 3.84TB Read Intensive SATA 6Gb HS SSD	No	8
4XB7A17105	BK78	ThinkSystem 2.5" S4520 7.68TB Read Intensive SATA 6Gb HS SSD	No	8
4XB7A38273	BCTE	ThinkSystem 2.5" Multi Vendor 960GB Entry SATA 6Gb Hot Swap SSD	No	8
4XB7A38274	BCTF	ThinkSystem 2.5" Multi Vendor 1.92TB Entry SATA 6Gb Hot Swap SSD	No	8
4XB7A38275	BCTG	ThinkSystem 2.5" Multi Vendor 3.84TB Entry SATA 6Gb Hot Swap SSD	No	8
4XB7A17079	B8JP	ThinkSystem 2.5" 5300 3.84TB Entry SATA 6Gb Hot Swap SSD	No	8
4XB7A17080	B8J2	ThinkSystem 2.5" 5300 7.68TB Entry SATA 6Gb Hot Swap SSD	No	8

Table 20. 2.5-inch hot-swap PCIe 4.0 NVMe SSDs

Part number	Feature code	Description	SED support	Max Qty
2.5-inch SSDs - U.2 PCIe 4.0 NVMe - Write Intensive/Performance (10+ DWPD)				
4XB7A17158	BKKY	ThinkSystem 2.5" U.2 P5800X 400GB Write Intensive NVMe PCIe 4.0 x4 HS SSD	No	8
4XB7A17159	BKKZ	ThinkSystem 2.5" U.2 P5800X 800GB Write Intensive NVMe PCIe 4.0 x4 HS SSD	No	8
4XB7A17160	BMM8	ThinkSystem 2.5" U.2 P5800X 1.6TB Write Intensive NVMe PCIe 4.0 x4 HS SSD	No	8
2.5-inch SSDs - U.2 PCIe 4.0 NVMe - Mixed Use/Mainstream (3-5 DWPD)				
4XB7A17129	BNEG	ThinkSystem 2.5" U.2 P5620 1.6TB Mixed Use NVMe PCIe 4.0 x4 HS SSD	Support	8
4XB7A17130	BNEH	ThinkSystem 2.5" U.2 P5620 3.2TB Mixed Use NVMe PCIe 4.0 x4 HS SSD	Support	8

Part number	Feature code	Description	SED support	Max Qty
4XB7A17133	BNEZ	ThinkSystem 2.5" U.2 P5620 6.4TB Mixed Use NVMe PCIe 4.0 x4 HS SSD	Support	8
4XB7A17136	BA4V	ThinkSystem 2.5" U.2 P5620 12.8TB Mixed Use NVMe PCIe 4.0 x4 HS SSD	Support	8
2.5-inch SSDs - U.3 PCIe 4.0 NVMe - Mixed Use/Mainstream (3-5 DWPD)				
4XB7A79639	BNF1	ThinkSystem 2.5" U.3 7450 MAX 800GB Mixed Use NVMe PCIe 4.0 x4 HS SSD	Support	8
4XB7A13967	BNEJ	ThinkSystem 2.5" U.3 7450 MAX 1.6TB Mixed Use NVMe PCIe 4.0 x4 HS SSD	Support	8
4XB7A13970	BNEY	ThinkSystem 2.5" U.3 7450 MAX 3.2TB Mixed Use NVMe PCIe 4.0 x4 HS SSD	Support	8
4XB7A13971	BNEL	ThinkSystem 2.5" U.3 7450 MAX 6.4TB Mixed Use NVMe PCIe 4.0 x4 HS SSD	Support	8
4XB7A84056	BRG0	ThinkSystem 2.5" U.3 7450 MAX 12.8TB Mixed Use NVMe PCIe 4.0 x4 HS SSD	Support	8
4XB7A17112	B96Z	ThinkSystem U.3 Kioxia CM6-V 1.6TB Mainstream NVMe PCIe4.0 x4 Hot Swap SSD	No	8
2.5-inch SSDs - U.2 PCIe 4.0 NVMe - Read Intensive/Entry (<3 DWPD)				
4XB7A90099	BXMB	ThinkSystem 2.5" U.2 PM9A3 960GB Read Intensive NVMe PCIe 4.0 x4 HS SSD	Support	8
4XB7A90100	BXMA	ThinkSystem 2.5" U.2 PM9A3 1.92TB Read Intensive NVMe PCIe 4.0 x4 HS SSD	Support	8
4XB7A90101	BXM9	ThinkSystem 2.5" U.2 PM9A3 3.84TB Read Intensive NVMe PCIe 4.0 x4 HS SSD	Support	8
4XB7A13941	BMGD	ThinkSystem 2.5" U.2 P5520 1.92TB Read Intensive NVMe PCIe 4.0 x4 HS SSD	Support	8
4XB7A13942	BMGE	ThinkSystem 2.5" U.2 P5520 3.84TB Read Intensive NVMe PCIe 4.0 x4 HS SSD	Support	8
4XB7A13943	BNEF	ThinkSystem 2.5" U.2 P5520 7.68TB Read Intensive NVMe PCIe 4.0 x4 HS SSD	Support	8
4XB7A13631	BNEQ	ThinkSystem 2.5" U.2 P5520 15.36TB Read Intensive NVMe PCIe 4.0 x4 HS SSD	Support	8
4XB7A17145	BCFT	ThinkSystem 2.5" U.2 P5500 1.92TB Read Intensive NVMe PCIe 4.0 x4 HS SSD	No	8
4XB7A17147	BCFU	ThinkSystem 2.5" U.2 P5500 7.68TB Read Intensive NVMe PCIe 4.0 x4 HS SSD	No	8
2.5-inch SSDs - U.3 PCIe 4.0 NVMe - Read Intensive/Entry (<3 DWPD)				
4XB7A81951	BPKX	ThinkSystem 2.5" U.3 PM1733a 1.92TB Read Intensive NVMe PCIe 4.0 x4 HS SSD	Support	8
4XB7A81952	BPKY	ThinkSystem 2.5" U.3 PM1733a 3.84TB Read Intensive NVMe PCIe 4.0 x4 HS SSD	Support	8
4XB7A81953	BPKZ	ThinkSystem 2.5" U.3 PM1733a 7.68TB Read Intensive NVMe PCIe 4.0 x4 HS SSD	Support	8
4XB7A81954	BPL0	ThinkSystem 2.5" U.3 PM1733a 15.36TB Read Intensive NVMe PCIe 4.0 x4 HS SSD	Support	8

Part number	Feature code	Description	SED support	Max Qty
4XB7A81999	BPL1	ThinkSystem 2.5" U.3 PM1733a 30.72TB Read Intensive NVMe PCIe 4.0 x4 HS SSD	Support	8
4XB7A79646	BNF3	ThinkSystem 2.5" U.3 7450 PRO 960GB Read Intensive NVMe PCIe 4.0 x4 HS SSD	Support	8
4XB7A79647	BNF2	ThinkSystem 2.5" U.3 7450 PRO 1.92TB Read Intensive NVMe PCIe 4.0 x4 HS SSD	Support	8
4XB7A79648	BNF5	ThinkSystem 2.5" U.3 7450 PRO 3.84TB Read Intensive NVMe PCIe 4.0 x4 HS SSD	Support	8
4XB7A79649	BNF4	ThinkSystem 2.5" U.3 7450 PRO 7.68TB Read Intensive NVMe PCIe 4.0 x4 HS SSD	Support	8
4XB7A83097	BQAV	ThinkSystem 2.5" U.3 7450 PRO 15.36TB Read Intensive NVMe PCIe 4.0 x4 HS SSD	Support	8

Table 21. 2.5-inch hot-swap PCIe 3.0 NVMe SSDs

Part number	Feature code	Description	SED support	Max Qty
2.5-inch SSDs - U.2 PCIe 3.0 NVMe - Write Intensive/Performance (10+ DWPD)				
4XB7A38159	B972	ThinkSystem 2.5" U.2 P4800X 375GB Write Intensive NVMe PCIe 3.0 x4 HS SSD 60DWPD	No	8
4XB7A38160	B973	ThinkSystem 2.5" U.2 P4800X 750GB Write Intensive NVMe PCIe 3.0 x4 HS SSD 60DWPD	No	8
4XB7A17163	B96L	ThinkSystem 2.5" U.2 P4800X 1.5TB Write Intensive NVMe PCIe 3.0 x4 HS SSD 60DWPD	No	8
2.5-inch SSDs - U.2 PCIe 3.0 NVMe - Read Intensive/Entry (<3 DWPD)				
4XB7A10176	B34P	ThinkSystem U.2 PM983 3.84TB Entry NVMe PCIe 3.0 x4 Hot Swap SSD	No	8

Table 22. E1.S EDSFF hot-swap PCIe 4.0 NVMe SSDs

Part number	Feature code	Description	SED support	Max Qty
E1.S hot-swap SSDs - PCIe 4.0 NVMe - Read Intensive/Entry (<3 DWPD)				
4XB7A13998	BP3L	ThinkSystem E1.S 5.9mm 7450 PRO 3.84TB Read Intensive NVMe PCIe 4.0 x4 HS SSD	Support	6
4XB7A80499	BPKW	ThinkSystem E1.S 5.9mm 7450 PRO 7.68TB Read Intensive NVMe PCIe 4.0 x4 HS SSD	Support	6

Table 24. 3.5-inch hot-swap 6 Gb SATA HDDs

Part number	Feature code	Description	SED support	Max Qty
3.5-inch hot-swap HDDs - 6 Gb NL SATA				
7XB7A00049	AUUF	ThinkSystem 3.5" 1TB 7.2K SATA 6Gb Hot Swap 512n HDD	No	4
7XB7A00050	AUUD	ThinkSystem 3.5" 2TB 7.2K SATA 6Gb Hot Swap 512n HDD	No	4
7XB7A00051	AUU8	ThinkSystem 3.5" 4TB 7.2K SATA 6Gb Hot Swap 512n HDD	No	4
7XB7A00052	AUUA	ThinkSystem 3.5" 6TB 7.2K SATA 6Gb Hot Swap 512e HDD	No	4
7XB7A00053	AUU9	ThinkSystem 3.5" 8TB 7.2K SATA 6Gb Hot Swap 512e HDD	No	4
7XB7A00054	AUUB	ThinkSystem 3.5" 10TB 7.2K SATA 6Gb Hot Swap 512e HDD	No	4
7XB7A00068	B118	ThinkSystem 3.5" 12TB 7.2K SATA 6Gb Hot Swap 512e HDD	No	4
4XB7A13907	B497	ThinkSystem 3.5" 14TB 7.2K SATA 6Gb Hot Swap 512e HDD	No	4
4XB7A13914	B7F0	ThinkSystem 3.5" 16TB 7.2K SATA 6Gb Hot Swap 512e HDD	No	4
4XB7A38130	BCFH	ThinkSystem 3.5" 18TB 7.2K SATA 6Gb Hot Swap 512e HDD	No	4
4XB7A80354	BPKV	ThinkSystem 3.5" 20TB 7.2K SATA 6Gb Hot Swap 512e HDD	No	4
4XB7A83765	BTR8	ThinkSystem 3.5" 22TB 7.2K SATA 6Gb Hot Swap 512e HDD	Support	4

Table 25. 3.5-inch hot-swap 6 Gb SATA SSDs

Part number	Feature code	Description	SED support	Max Qty
3.5-inch hot-swap SSDs - 6 Gb SATA - Mixed Use/Mainstream (3-5 DWPD)				
4XB7A87202	BURK	ThinkSystem 3.5" 5400 MAX 1.92TB Mixed Use SATA 6Gb HS SSD	Support	4
4XB7A17137	BA4W	ThinkSystem 3.5" S4620 480GB Mixed Use SATA 6Gb HS SSD	No	4
4XB7A17138	BA4X	ThinkSystem 3.5" S4620 960GB Mixed Use SATA 6Gb HS SSD	No	4
4XB7A17139	BA4Y	ThinkSystem 3.5" S4620 1.92TB Mixed Use SATA 6Gb HS SSD	No	4
4XB7A17140	BK7P	ThinkSystem 3.5" S4620 3.84TB Mixed Use SATA 6Gb HS SSD	No	4
4XB7A17099	B8HR	ThinkSystem 3.5" 5300 1.92TB Mainstream SATA 6Gb Hot Swap SSD	No	4
4XB7A13643	B49V	ThinkSystem 3.5" S4610 3.84TB Mixed Use SATA 6Gb HS SSD	No	4
4XB7A13644	B96J	ThinkSystem 3.5" S4610 7.68TB Mixed Use SATA 6Gb HS SSD	No	4
3.5-inch hot-swap SSDs - 6 Gb SATA - Read Intensive/Entry (<3 DWPD)				
4XB7A17118	BA7K	ThinkSystem 3.5" S4520 240GB Read Intensive SATA 6Gb HS SSD	No	4
4XB7A17119	BA7L	ThinkSystem 3.5" S4520 480GB Read Intensive SATA 6Gb HS SSD	No	4
4XB7A17120	BA7M	ThinkSystem 3.5" S4520 960GB Read Intensive SATA 6Gb HS SSD	No	4
4XB7A17121	BA7N	ThinkSystem 3.5" S4520 1.92TB Read Intensive SATA 6Gb HS SSD	No	4
4XB7A17122	BK7F	ThinkSystem 3.5" S4520 3.84TB Read Intensive SATA 6Gb HS SSD	No	4
4XB7A17123	BK7G	ThinkSystem 3.5" S4520 7.68TB Read Intensive SATA 6Gb HS SSD	No	4
4XB7A17085	B8HQ	ThinkSystem 3.5" 5300 3.84TB Entry SATA 6Gb Hot Swap SSD	No	4
4XB7A17086	B8J3	ThinkSystem 3.5" 5300 7.68TB Entry SATA 6Gb Hot Swap SSD	No	4

Table 26. M.2 SATA drives

Part number	Feature code	Description	SED support	Max Qty
M.2 SSDs - 6 Gb SATA - Read Intensive/Entry (<3 DWPD)				
4XB7A90105	BXMK	ThinkSystem M.2 ER2 240GB Read Intensive SATA 6Gb NHS SSD (China only)	Support	2
4XB7A90106	BXMJ	ThinkSystem M.2 ER2 480GB Read Intensive SATA 6Gb NHS SSD (China only)	Support	2
4XB7A82286	BQ1Z	ThinkSystem M.2 5400 PRO 240GB Read Intensive SATA 6Gb NHS SSD	Support	2
4XB7A82287	BQ1Y	ThinkSystem M.2 5400 PRO 480GB Read Intensive SATA 6Gb NHS SSD	Support	2
4XB7A82288	BQ20	ThinkSystem M.2 5400 PRO 960GB Read Intensive SATA 6Gb NHS SSD	Support	2
7N47A00129	AUUL	ThinkSystem M.2 32GB SATA 6Gbps Non-Hot Swap SSD	No	2
7N47A00130	AUUV	ThinkSystem M.2 128GB SATA 6Gbps Non-Hot Swap SSD	No	2
4XB7A17073	B919	ThinkSystem M.2 5300 480GB SATA 6Gbps Non-Hot Swap SSD	No	2
4XB7A17074	B8JJ	ThinkSystem M.2 5300 960GB SATA 6Gbps Non-Hot Swap SSD	No	2

Table 27. M.2 PCIe 4.0 NVMe drives

Part number	Feature code	Description	SED support	Max Qty
M.2 SSDs - PCIe 4.0 NVMe - Mixed Use/Mainstream (3-5 DWPD)				
4XB7A84603	BS2Q	ThinkSystem M.2 7450 MAX 800GB Mixed Use NVMe PCIe 4.0 x4 NHS SSD	Support	2
M.2 SSDs - PCIe 4.0 NVMe - Read Intensive/Entry (<3 DWPD)				
4XB7A90102	BXMH	ThinkSystem M.2 PM9A3 960GB Read Intensive NVMe PCIe 4.0 x4 NHS SSD	Support	2
4XB7A90103	BXMG	ThinkSystem M.2 PM9A3 1.92TB Read Intensive NVMe PCIe 4.0 x4 NHS SSD	Support	2
4XB7A90104	BXMF	ThinkSystem M.2 PM9A3 3.84TB Read Intensive NVMe PCIe 4.0 x4 NHS SSD	Support	2
4XB7A82636	BS2P	ThinkSystem M.2 7450 PRO 480GB Read Intensive NVMe PCIe 4.0 x4 NHS SSD	Support	2
4XB7A13999	BKSR	ThinkSystem M.2 7450 PRO 960GB Read Intensive NVMe PCIe 4.0 x4 NHS SSD	Support	2
4XB7A14000	BKSS	ThinkSystem M.2 7450 PRO 1.92TB Read Intensive Entry NVMe PCIe 4.0 x4 NHS SSD	Support	2
4XB7A84604	BS2R	ThinkSystem M.2 7450 PRO 3.84TB Read Intensive NVMe PCIe 4.0 x4 NHS SSD	Support	2

Table 28. M.2 PCIe 3.0 NVMe drives

Part number	Feature code	Description	SED support	Max Qty
M.2 SSDs - PCIe 3.0 NVMe - Read Intensive/Entry (<3 DWPD)				
4XB7A38177	B8JR	ThinkSystem M.2 PM983 960GB NVMe PCIe 3.0 x4 Non-Hot Swap SSD	No	2

USB memory key

For general portable storage needs, the server also supports the USB memory key option that is listed in the following table.

Table 29. USB memory key

Part number	Feature	Description
4X77A08621	B8NV	ThinkSystem 32GB USB Flash Drive

Optical drives

The server supports the external USB optical drive listed in the following table.

Table 30. External optical drive

Part number	Feature code	Description
7XA7A05926	AVV8	ThinkSystem External USB DVD RW Optical Disk Drive

The drive is based on the Lenovo Slim DVD Burner DB65 drive and supports the following formats: DVD-RAM, DVD-RW, DVD+RW, DVD+R, DVD-R, DVD-ROM, DVD-R DL, CD-RW, CD-R, CD-ROM.

I/O expansion

The SR670 V2 supports up to eight GPUs:

- SXM model: 4x PCIe 4.0 x16 connections for GPUs
- 4-DW GPU model: 4x PCIe 4.0 x16 slots for double-wide GPUs or 8x PCIe 4.0 x8 slots for single-wide GPUs
- 8-DW GPU model: 8x PCIe 4.0 x16 slots for double-wide GPUs

The server also supports, for networking or storage adapters, up to four PCIe 4.0 x16 slots plus an OCP slot, depending on the GPU and drive bay configuration selected. Slot selection is a subset of the following slots:

- Front slots
  - Slot 1: PCIe 4.0 x16 slot, full-height; half-length in SXM model, full-length in 4-DW GPU and 8-DW GPU models
  - Slot 2: PCIe 4.0 x16 slot, full-height; half-length in SXM model, full-length in 4-DW GPU and 8-DW GPU models
- Rear riser slot 1
  - Slot 15: PCIe 4.0 x16 or x8 slot, full-height, half-length
  - Slot 16: PCIe 4.0 x16 slot, full-height, half-length
- Rear riser slot 2
  - Slot 20: PCIe 4.0 x16 slot, full-height, half-length
  - Slot 21: PCIe 4.0 x16 slot, full-height, half-length
- OCP slot
  - Slot 27: PCIe 4.0 x16 or x8 slot, OCP 3.0 form factor

The locations of these slots is shown in the following figure.

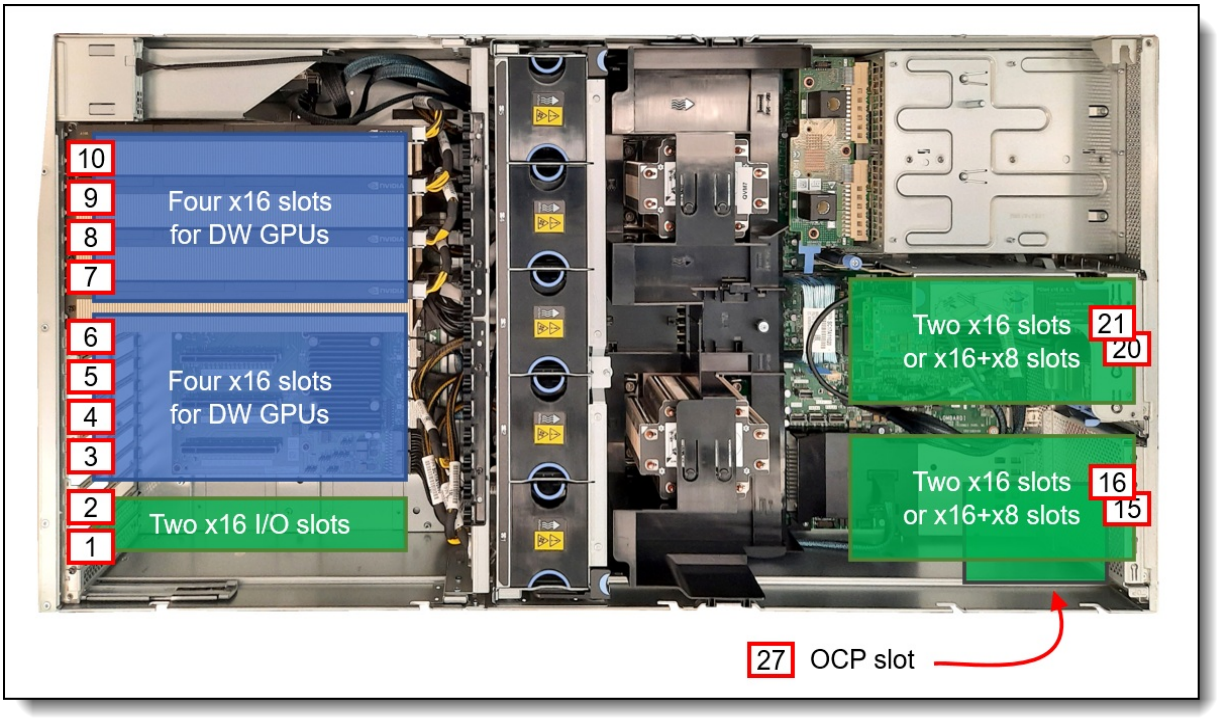

Figure 15. Locations of slots

All GPU and I/O slots are enabled using plug-in or cabled riser cards. Ordering information is shown in the following table.

Table 31. Riser cards

Feature code	Description	Maximum supported
GPU Risers		
BFGH	ThinkSystem SR670 V2 Direct 4x x16 PCIe Gen4 DW/SW GPU Riser	1
BFTW	ThinkSystem SR670 V2 Switched 4x x16 PCIe Gen4 DW/SW GPU Dual Uplink Riser	2
BFGK	ThinkSystem SR670 V2 Switched 4x x16 PCIe Gen4 DW/SW GPUDirect RDMA Riser	2
BP1V	ThinkSystem SR670 V2 Switched 4x x16 PCIe Gen4 DW/SW GPUDirect Storage Riser	2
BFGJ	ThinkSystem SR670 V2 Direct 8x x8 PCIe Gen4 SW GPU Riser	1
Front I/O Riser		
BFGF	ThinkSystem SR670 V2 x16 + x16 PCIe Gen4 Front IO Riser (for use in 4-DW GPU and 8-DW GPU configurations)	1
BJEA	ThinkSystem SR670 V2 x16 + x16 PCIe Gen4 Front IO Riser for SXM Model (for use in SXM configurations)	1
Rear I/O Riser		
BFGL	ThinkSystem SR670 V2 x16 + x16 cabled PCIe Gen4 Rear IO Riser	2
BHMT	ThinkSystem SR670 V2 x16 + x8 cabled PCIe Gen4 Rear IO Riser	1

As listed in the table, there are five GPU risers, one x8 riser and four x16 risers. The x8 riser offers eight x8 slots for single-wide GPUs with direct uplinks to the processors. All x16 offer four x16 slots for double-wide GPUs, however the difference is the uplink (host) connection.

1. The direct x16 riser (feature BFGH) has four x16 connections (64 lanes total, implemented using eight x8 cables) for connecting to the system processors. This provides a direct 1:1 connection to all four GPUs.
2. The switched riser (feature BFTW) has two x16 connections (32 lanes, implemented using four x8 cables) for connecting to the processors. The two x16 links connect to a switch on the riser that, in turn, connects to the four x16 slots for the GPUs (64 lanes). This provides a 1:2 connection to the four GPUs.
3. The switched riser with GPUDirect RDMA (feature BFGK) is similar to feature BFTW, however it allows the implementation of NVIDIA GPUDirect RDMA. Designed specifically for the needs of GPU acceleration, GPUDirect RDMA provides direct communication between NVIDIA GPUs in remote systems. This eliminates the system CPUs and the required buffer copies of data via the system memory, resulting in 10X better performance. The riser provides a x16 connection to a single CPU (a 1:4 connection to the four GPUs) and a x16 connection directly to I/O slots.
4. The switched riser with GPUDirect Storage (feature BP1V) is similar to GPUDirect RDMA riser (feature BFGK), however it allows the implementation of NVIDIA GPUDirect Storage and the downlinks are to NVMe drives instead of I/O slots.
5. The direct x8 riser (feature BFGJ) has eight x8 connections (64 lanes total, implemented using eight x8 cables) for connecting to the system processors. This provides a direct 1:1 connection to all eight GPUs.

Block diagrams of these GPU risers is shown in the following figure.

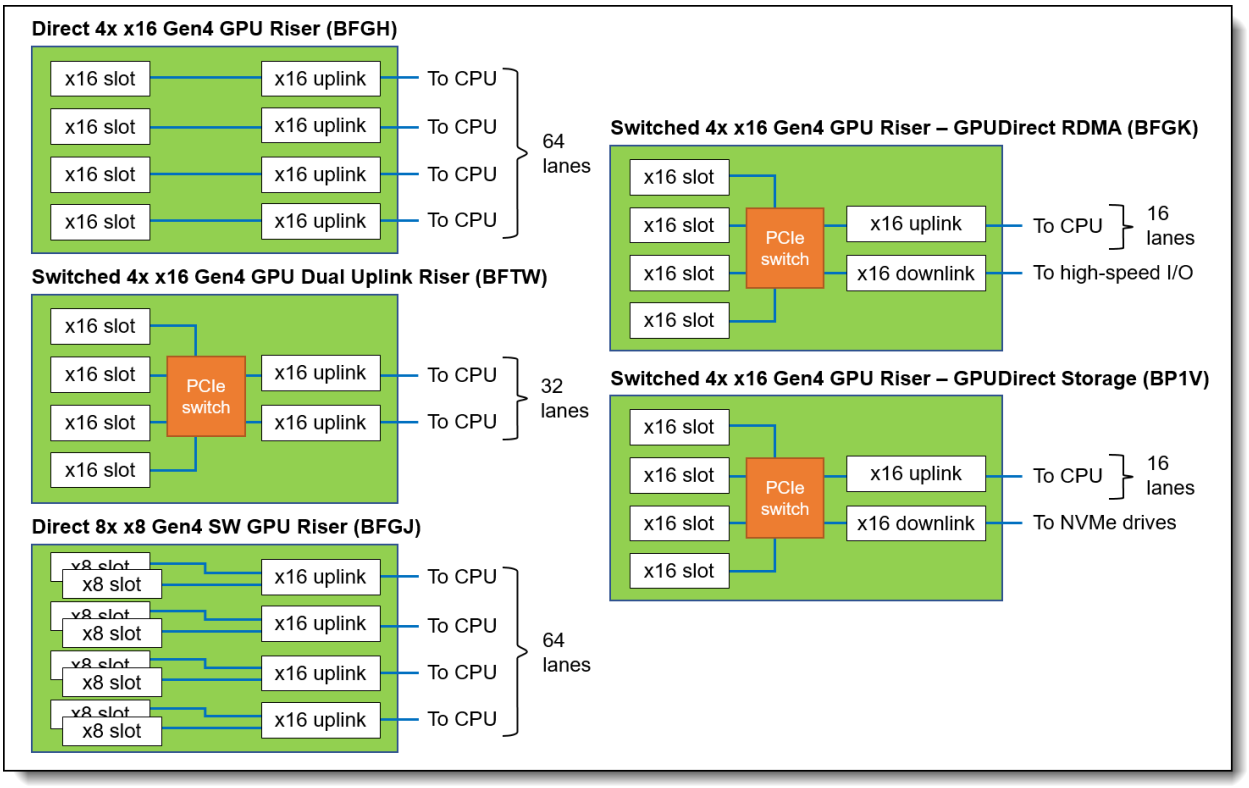

Figure 16. Block diagrams of the GPU risers

Use of the GPU risers is as follows:

- The 8-DW GPU model uses 2 switched risers. This provides connections for eight GPUs using a 1:2 or 1:4 subscription.
- The 4-DW GPU model can use either
  - A direct x16 riser (1:1) or a switched x16 riser (1:2 or 1:4) to provide connections for four GPUs. Each GPU gets a x16 connection. The choice of GPU riser is based on what other I/O risers are used in the configuration.
  - A direct x8 riser to provide connections for up to eight single-wide GPUs. Each GPU gets a x8 connection.
- The SXM model does not need a riser but instead connects through a PCIe 4.0 retimer adapter to offer 1:1 direct connections to the processors.

The slots at the rear of the server are 2-slot risers. The mechanical cage has a third slot at the top which does not support an adapter, but is instead of use either for a serial port or for a RAID adapter supercap. Adapter slots are as follows:

- Riser BFGL has two PCIe 4.0 x16 slots
- Riser BHMT has one PCIe 4.0 x16 slot (bottom slot) and one PCIe 4.0 x8 slot (top slot)

The following figure shows the rear riser.

Tip: The two feature codes in the above table (BFGL and BHMT) are the same physical riser; the only difference is whether 1 or 2 of the cabled host interfaces are connected.

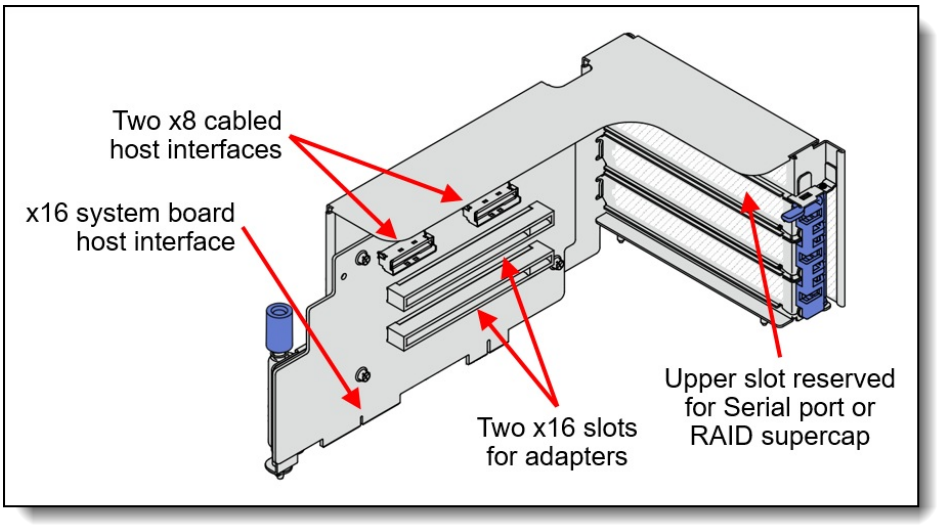

Figure 17. Rear riser

Serial port

The SR670 V2 optionally supports an RS-232 serial port by adding a COM port bracket to either rear riser cage in the top slot position. This position is not used by any adapter so there is no loss of PCIe slot availability, however the location is shared with the RAID supercap.

Note: The serial port is only supported in configurations with rear slots. The table in the Configurations section indicates which configurations have rear slots.

Table 32. Serial port

Part number	Feature code	Description	Maximum supported
CTO only	BFGR	ThinkSystem SR670 V2 Rear Serial Port	1

Field upgrades

The rear riser can be ordered as a field upgrade. The kit is suitable for either the Riser 1 or Riser 2 position and contains the necessary cables.

Table 33. Field upgrade for rear riser slots

Part number	Description	Maximum supported
4XC7A69404	ThinkSystem SR670 V2 x16 + x16 cabled PCIe Gen4 Rear IO Riser • Riser card • Riser bracket • 2x 800mm PCIe x8 cables - Riser 1 or Riser 2 to system board ports • 2x 750mm PCIe x8 cables - Riser 1 to GPU riser (GPU Direct) • 2x 950mm PCIe x8 cables - Riser 2 to GPU riser (GPU Direct)	2

GPU adapters

The SR670 V2 supports the following graphics processing units (GPUs), depending on the front shuttle selected. All GPUs installed must be identical.

Table 34. Supported GPUs

Part number	Feature code	Description	Form factor	SR670 V2 support		
				SXM model	4-DW GPU model	8-DW GPU model
CTO only	BHT3	ThinkSystem NVIDIA HGX A100 80GB 500W 4-GPU Board	SXM	1	No support	No support
CTO only	BCSL	ThinkSystem NVIDIA HGX A100 40GB 400W 4-GPU Board	SXM	1	No support	No support
4X67A82257	BR9U	ThinkSystem NVIDIA H100 80GB PCIe Gen5 Passive GPU	Double wide	No support	4	8
4X67A84823	BT87	ThinkSystem NVIDIA L40 48GB PCIe Gen4 Passive GPU	Double wide	No support	4	8
4X67A81102	BP04	ThinkSystem AMD Instinct MI210 PCIe Gen4 Passive Accelerator	Double wide	No support	4	8
4X67A76715	BQZP	ThinkSystem NVIDIA A100 80GB PCIe Gen4 Passive GPU	Double wide	No support	4	8
4X67A72593	BQZQ	ThinkSystem NVIDIA A40 48GB PCIe Gen4 Passive GPU w/o CEC	Double wide	No support	4	8
4X67A76581	BQZR	ThinkSystem NVIDIA A30 24GB PCIe Gen4 Passive GPU w/o CEC	Double wide	No support	4	8
4X67A71309	BG3F	ThinkSystem NVIDIA Ampere NVLink 2-Slot Bridge	Bridge	No support	6	12
4X67A82325	BRMD	ThinkSystem AMD Instinct MI210 4x Infinity Fabric Link Bridge Card	Bridge	No support	1	2
4X67A84824	BS2C	ThinkSystem NVIDIA L4 24GB PCIe Gen4 Passive GPU	Single-wide	No support	8	No support
4X67A71311	BQZS	ThinkSystem NVIDIA A10 24GB PCIe Gen4 Passive GPU	Single-wide	No support	8	No support
4X67A81547	BQZT	ThinkSystem NVIDIA A2 16GB PCIe Gen4 Passive GPU	Single-wide	No support	8	No support
4X67A14926	B4YB	ThinkSystem NVIDIA T4 16GB PCIe Passive GPU	Single-wide	No support	8	No support

Configuration rules:

- Some NVIDIA A Series GPUs are available as two feature codes, one with a CEC chip and one without a CEC chip (ones without the CEC chip have "w/o CEC" in the name). The CEC is a secondary Hardware Root of Trust (RoT) module that provides an additional layer of security, which can be used by customers who have high regulatory requirements or high security standards. NVIDIA uses a multi-layered security model and hence the protection offered by the primary Root of Trust embedded in the GPU is expected to be sufficient for most customers. The CEC defeatured products still offer Secure Boot, Secure Firmware Update, Firmware Rollback Protection, and In-Band Firmware Update Disable. Specifically, without the CEC chip, the GPU does not support Key Revocation or Firmware Attestation. CEC and non-CEC GPUs of the same type of GPU can be mixed in field upgrades.

- **Single-wide GPUs have a x8 connection**: When installed in the 4-DW GPU model configuration, the single-wide GPUs are installed in slots with only 8 lanes (x8) connected instead of the normal 16 lanes (x16).
- **vGPU support**: The vGPU feature of NVIDIA GPUs is supported in an 8-DW GPU configuration only with firmware released 2/28/2022 or later. For more information, see https://datacentersupport.lenovo.com/us/en/solutions/ht512373.
- The double-wide GPUs also support the installation of an NVLink bridge between adjacent pairs of GPUs. A100 GPUs use three NVLink bridges per pair and A30, A40 GPUs support one NVLink bridge per pair. Ordering information in the following table.
- The H100 on the SR670 V2 does not currently support the NVLink bridge

Table 35. NVLink bridge

Part number	Feature code	Description	Quantity supported
4X67A71309	BG3F	ThinkSystem NVIDIA Ampere NVLink 2-Slot Bridge	A100: 3 per pair of GPUs A30, A40: 1 per pair

For information about these GPUs, see the ThinkSystem GPU Summary, available at: https://lenovopress.com/lp0768-thinksystem-thinkagile-gpu-summary

When adding a double-wide GPU or NVIDIA A10 GPU as a field upgrade, you will need an additional GPU auxiliary power cable as listed in the following table. The NVIDIA T4 GPU does not require an auxiliary power cable.

Table 36. GPU auxiliary power cable part number

Part number	Feature code	Description	Maximum supported
4X97A69627	BFNL	ThinkSystem SR670 V2 GPU Option Power Cable (for double-wide GPUs: MI210, A100, A40, A30)	8
4X97A69631	BHMX	ThinkSystem SR670 V2 Supplemental Power Cable for A10 GPU	8
4X97A85027	BRWL	ThinkSystem SR670 V2 H100/L40 GPU Option Power Cable (for L40)	8

Network adapters

The server has a dedicated OCP 3.0 SFF slot with either a PCIe 4.0 x8 or x16 host interface, depending on the server configuration as described in the Configurations section. See Figure 3 for the location of the OCP slot.

Note: Some configurations do not include connectivity to the OCP slot. See the Configurations section for details.

The following table lists the supported OCP adapters. One port can optionally be shared with the XCC management processor for Wake-on-LAN and NC-SI support. Only 1 OCP card can be installed in the server.

Table 37. Supported OCP adapters

Part number	Feature code	Description	Maximum supported	PCIe interface
Gigabit				
4XC7A08235	B5T1	ThinkSystem Broadcom 5719 1GbE RJ45 4-port OCP Ethernet Adapter	1	PCIe 3.0 x8
10 GbE				
4XC7A80268	BPPY	ThinkSystem Intel X710-T4L 10GBase-T 4-Port OCP Ethernet Adapter	1	PCIe 3.0 x8
25 GbE				
4XC7A08237	B5SZ	ThinkSystem Broadcom 57414 10/25GbE SFP28 2-port OCP Ethernet Adapter	1	PCIe 3.0 x8
4XC7A08294	BCD4	ThinkSystem Intel E810-DA2 10/25GbE SFP28 2-Port OCP Ethernet Adapter	1	PCIe 4.0 x8
4XC7A80269	BP8L	ThinkSystem Intel E810-DA4 10/25GbE SFP28 4-Port OCP Ethernet Adapter	1	PCIe 4.0 x16
4XC7A62582	BE4T	ThinkSystem Mellanox ConnectX-6 Lx 10/25GbE SFP28 2-Port OCP Ethernet Adapter	1	PCIe 3.0 x8

For more information, including the transceivers and cables that each adapter supports, see the list of Lenovo Press Product Guides in the Networking adapters category:
https://lenovopress.com/servers/options/ethernet

The following table lists additional supported network adapters that can be installed in the regular PCIe slots (not the GPU slots).

Table 38. Supported PCIe Network Adapters

Part number	Feature code	Description	Maximum supported	Slots supported
Gigabit Ethernet				
7ZT7A00484	AUZV	ThinkSystem Broadcom 5719 1GbE RJ45 4-Port PCIe Ethernet Adapter	4	All I/O slots
7ZT7A00535	AUZW	ThinkSystem I350-T4 PCIe 1Gb 4-Port RJ45 Ethernet Adapter	4	All I/O slots
4XC7A80266	BNWL	ThinkSystem Intel X710-T2L 10GBase-T 2-Port PCIe Ethernet Adapter	4	All I/O slots
10 GbE SFP+ Ethernet				
7ZT7A00537	AUKX	ThinkSystem Intel X710-DA2 PCIe 10Gb 2-Port SFP+ Ethernet Adapter	4	All I/O slots
7XC7A05525	B0YL	Intel X710-DA4 4x10Gb SFP+ Adapter	4	All I/O slots
25 GbE				
4XC7A80267	BP8M	ThinkSystem Intel E810-DA4 10/25GbE SFP28 4-Port PCIe Ethernet Adapter	4	All I/O slots
4XC7A08238	B5T0	ThinkSystem Broadcom 57414 10/25GbE SFP28 2-port PCIe Ethernet Adapter	4	All I/O slots
4XC7A08295	BCD6	ThinkSystem Intel E810-DA2 10/25GbE SFP28 2-Port PCIe Ethernet Adapter	4	All I/O slots
4XC7A62580	BE4U	ThinkSystem Mellanox ConnectX-6 Lx 10/25GbE SFP28 2-Port PCIe Ethernet Adapter	4	All I/O slots
100Gb Ethernet				
4XC7A08297	BK1J	ThinkSystem Broadcom 57508 100GbE QSFP56 2-port PCIe 4 Ethernet Adapter	4	1, 2, 21, 15, 16, 20
4XC7A08248	B8PP	ThinkSystem Mellanox ConnectX-6 Dx 100GbE QSFP56 2-port PCIe Ethernet Adapter	4	1, 2, 21, 15, 16, 20
100Gb Ethernet / InfiniBand HDR100				
4C57A14177	B4R9	ThinkSystem Mellanox ConnectX-6 HDR100/100GbE QSFP56 1-port PCIe VPI Adapter	4	1, 2, 21, 15, 16, 20
4C57A14178	B4RA	ThinkSystem Mellanox ConnectX-6 HDR100/100GbE QSFP56 2-port PCIe VPI Adapter	4	1, 2, 21, 15, 16, 20
200Gb Ethernet / InfiniBand HDR				
4C57A15326	B4RC	ThinkSystem Mellanox ConnectX-6 HDR/200GbE QSFP56 1-port PCIe 4 VPI Adapter	4	1, 2, 21, 15, 16, 20
4C57A14179	B4RB	ThinkSystem Mellanox HDR/200GbE 2x PCIe Aux Kit	1	2, 16, 21*
200Gb Ethernet				
4XC7A83773	BQX9	ThinkSystem NVIDIA ConnectX-6 DX 200GbE QSFP56 1-Port PCIe Ethernet Adapter	4	1, 2, 21, 15, 16, 20

* See configuration requirements below

For more information, including the transceivers and cables that each adapter supports, see the list of Lenovo Press Product Guides in the Networking adapters category:
https://lenovopress.com/servers/options/ethernet

Configuration requirements:

- **Mellanox HDR PCIe Aux Kit**: The combination of the Mellanox Aux adapter (B4RB) and Mellanox ConnectX-6 HDR/200GbE VPI adapter (B4RC) implements SharedIO. The Aux adapter installs in either slot 2, 16 or 21 and the HDR adapter installs in slot 1, 15 or 20 respectively.
- **E810 Ethernet and X350 RAID/HBAs**: The use of both an Intel E810 network adapter and an X350 HBA/RAID adapter (9350, 5350 and 4350) is currently not supported in ThinkSystem servers. For details see Support Tip HT513226. Planned support for this combination of adapters is 4Q/2023 (SI 23-2).

Fibre Channel host bus adapters

The SR670 V2 does not support Fibre Channel adapters.

SAS adapters for external storage

The following table lists SAS HBAs and RAID adapters supported by SR670 V2 server for use with external storage.

Table 39. Adapters for external storage

Part number	Feature code	Description	Maximum supported	Slots supported
SAS HBAs				
7Y37A01090	AUNR	ThinkSystem 430-8e SAS/SATA 12Gb HBA	4	All I/O slots
4Y37A78837	BNWK	ThinkSystem 440-8e SAS/SATA PCIe Gen4 12Gb HBA	4	All I/O slots
External RAID adapters				
7Y37A01087	AUNQ	ThinkSystem RAID 930-8e 4GB Flash PCIe 12Gb Adapter	1*	Rear slots
4Y37A78836	BNWJ	ThinkSystem RAID 940-8e 4GB Flash PCIe Gen4 12Gb Adapter	1*	Rear slots

* See below regarding supercap requirements

For a comparison of the functions of the supported external storage adapters, see the ThinkSystem RAID Adapter and HBA Reference:
https://lenovopress.com/lp1288#sr670-v2-support=SR670%20V2&internal-or-external-ports=External

Mixing storage adapter families: The following HBA/RAID adapter combinations are supported:

- X30 external adapters with other X30 adapters (internal or external)
- X40 external adapters with other X40 adapters (internal or external)
- X40 external adapters with X350 internal adapters

The following HBA/RAID adapter combinations are *not* supported:

- X30 adapters (internal or external) with X40 adapters (internal or external)
- X30 adapters (internal or external) with X350 internal adapters

The RAID 930-8e and 940-8e use a flash power module (supercap), however the server only supports the installation of 1 supercap as described in the RAID flash power module (supercap) support section. As a result, if the internal storage is connected to a RAID 930 ,9350 or 940 adapter with supercap, then the use of a RAID 930/940-8e is not supported.

For more information, see the list of Lenovo Press Product Guides in the Host bus adapters and RAID adapters categories:

https://lenovopress.com/servers/options/hba
https://lenovopress.com/servers/options/raid

Flash storage adapters

All supported flash storage adapters are now withdrawn from marketing.

Cooling

The SR670 V2 server has up to five 80 mm dual-rotor simple-swap variable-speed fans. Fans are N+1 rotor redundant, tolerating a single-rotor failure. All fans are standard. The server also has one or two additional fans integrated in each of the four power supplies.

Power supplies

The SR670 V2 has two or four redundant hot-swap power supplies depending on the configuration, as listed in the following table.

Table 40. Power supply requirements

Configuration	Required power supply capacity and quantity	
	1800W	2400W
SXM model	Not supported	4
4-DW GPU model	4	2 or 4
8-DW GPU model	Not supported	4

The power supply choices are listed in the following table. All power supplies used in server must be identical.

Tip: When configuring a server in the DCSC configurator, power consumption is calculated precisely by interfacing with Lenovo Capacity Planner. You can therefore select the appropriate power supply for your configuration. However, do consider future upgrades that may require additional power needs.

Table 41. Power supply options

Part number	Feature	Description	Connector	Quantity supported	110V AC	220V AC	240V DC China only
4P57A26294	B8QB	ThinkSystem 1800W 230V Platinum Hot-Swap Gen2 Power Supply	C13	4	No	Yes	Yes
4P57A78362	BMUF	ThinkSystem 1800W 230V Platinum Hot-Swap Gen2 Power Supply v2	C13	4	No	Yes	Yes
4P57A26295	B962	ThinkSystem 2400W 230V Platinum Hot-Swap Gen2 Power Supply	C19	2 or 4	No	Yes	Yes
4P57A72667	BKTJ	ThinkSystem 2600W 230V Titanium Hot-Swap Gen2 Power Supply	C19	4	No	Yes	Yes

Power supply options do not include a line cord. For server configurations, the inclusion of a power cord is model dependent. Configure-to-order models can be configured without power cords if desired.

Power supply LEDs

The supported hot-swap power supplies have the following LEDs:

- Power input LED:
  - Green: The power supply is connected to the AC power source
  - Off: The power supply is disconnected from the AC power source or a power problem has occurred
- Power output LED:
  - Green: The server is on and the power supply is working normally
  - Blinking green: The power supply is in Zero-output/Standby mode (see below)
  - Off: The server is powered off, or the power supply is not working properly
- Power supply error LED:
  - Off: The power supply is working normally
  - Yellow: The power supply has failed

Zero-output mode: When Zero-output mode (also known as Standby mode or Cold Redundancy mode) is configured in XCC and the server power load is sufficiently low, one of the installed power supplies enters into the Standby state while the other one delivers entire load. When the power load increases, the standby power supply will switch to Active state to provide sufficient power to the server. Zero-output mode can be enabled or disabled in the XClarity Controller web interface, Server Configuration > Power Policy. If you select Disable, then both power supplies will be in the Active state.

Power cords (C13 connectors)

Line cords and rack power cables with C13 connectors can be ordered as listed in the following table.

Table 42. Power cords

Part number	Feature code	Description
Rack cables		
00Y3043	A4VP	1.0m, 10A/100-250V, C13 to C14 Jumper Cord
4L67A08367	B0N5	1.0m, 13A/100-250V, C13 to C14 Jumper Cord
39Y7937	6201	1.5m, 10A/100-250V, C13 to C14 Jumper Cord
4L67A08368	B0N6	1.5m, 13A/100-250V, C13 to C14 Jumper Cord
4L67A08365	B0N4	2.0m, 10A/100-250V, C13 to IEC 320-C14 Rack Power Cable
4L67A08369	6570	2.0m, 13A/100-250V, C13 to C14 Jumper Cord
4L67A08366	6311	2.8m, 10A/100-250V, C13 to C14 Jumper Cord
4L67A08370	6400	2.8m, 13A/100-250V, C13 to C14 Jumper Cord
39Y7932	6263	4.3m, 10A/100-250V, C13 to C14 Jumper Cord
4L67A08371	6583	4.3m, 13A/100-250V, C13 to C14 Jumper Cord
Line cords		
39Y7930	6222	2.8m, 10A/250V, C13 to IRAM 2073 (Argentina) Line Cord
81Y2384	6492	4.3m, 10A/250V, C13 to IRAM 2073 (Argentina) Line Cord
39Y7924	6211	2.8m, 10A/250V, C13 to AS/NZS 3112 (Australia/NZ) Line Cord
81Y2383	6574	4.3m, 10A/250V, C13 to AS/NZS 3112 (Australia/NZ) Line Cord
69Y1988	6532	2.8m, 10A/250V, C13 to NBR 14136 (Brazil) Line Cord
81Y2387	6404	4.3m, 10A/250V, C13 to NBR 14136 (Brazil) Line Cord
39Y7928	6210	2.8m, 10A/220V, C13 to GB 2099.1 (China) Line Cord
81Y2378	6580	4.3m, 10A/250V, C13 to GB 2099.1 (China) Line Cord
39Y7918	6213	2.8m, 10A/250V, C13 to DK2-5a (Denmark) Line Cord
81Y2382	6575	4.3m, 10A/250V, C13 to DK2-5a (Denmark) Line Cord

Part number	Feature code	Description
39Y7917	6212	2.8m, 10A/250V, C13 to CEE 7/7 (Europe) Line Cord
81Y2376	6572	4.3m, 10A/250V, C13 to CEE 7/7 (Europe) Line Cord
39Y7927	6269	2.8m, 10A/250V, C13 to IS 6538 (India) Line Cord
81Y2386	6567	4.3m, 10A/250V, C13 to IS 6538 (India) Line Cord
39Y7920	6218	2.8m, 10A/250V, C13 to SI 32 (Israel) Line Cord
81Y2381	6579	4.3m, 10A/250V, C13 to SI 32 (Israel) Line Cord
39Y7921	6217	2.8m, 10A/250V, C13 to CEI 23-16 (Italy) Line Cord
81Y2380	6493	4.3m, 10A/250V, C13 to CEI 23-16 (Italy) Line Cord
4L67A08362	6495	4.3m, 12A/200V, C13 to JIS C-8303 (Japan) Line Cord
39Y7922	6214	2.8m, 10A/250V, C13 to SABS 164-1 (South Africa) Line Cord
81Y2379	6576	4.3m, 10A/250V, C13 to SANS 164-1 (South Africa) Line Cord
39Y7925	6219	2.8m, 12A/220V, C13 to KSC 8305 (S. Korea) Line Cord
81Y2385	6494	4.3m, 12A/250V, C13 to KSC 8305 (S. Korea) Line Cord
39Y7919	6216	2.8m, 10A/250V, C13 to SEV 1011-S24507 (Swiss) Line Cord
81Y2390	6578	4.3m, 10A/250V, C13 to SEV 1011-S24507 (Swiss) Line Cord
81Y2375	6317	2.8m, 10A/250V, C13 to CNS 10917 (Taiwan) Line Cord
81Y2389	6531	4.3m, 10A/250V, C13 to CNS 10917 (Taiwan) Line Cord
39Y7923	6215	2.8m, 10A/250V, C13 to BS 1363/A (UK) Line Cord
81Y2377	6577	4.3m, 10A/250V, C13 to BS 1363/A (UK) Line Cord
46M2592	A1RF	2.8m, 10A/250V, C13 to NEMA 6-15P (US) Line Cord
4L67A08361	6373	4.3m, 10A/250V, C13 to NEMA 6-15P (US) Line Cord

Power cords (C19 connectors)

Line cords and rack power cables with C19 connectors can be ordered as listed in the following table.

Table 43. Power cords (C19 connectors)

Part number	Feature code	Description
Rack cables		
4L67A86677	BPJ0	0.5m, 16A/100-250V, C19 to IEC 320-C20 Rack Power Cable
4L67A86678	B4L0	1.0m, 16A/100-250V, C19 to IEC 320-C20 Rack Power Cable
4L67A86679	B4L1	1.5m, 16A/100-250V, C19 to IEC 320-C20 Rack Power Cable
4L67A86680	B4L2	2.0m, 16A/100-250V, C19 to IEC 320-C20 Rack Power Cable
39Y7916	6252	2.5m, 16A/100-240V, C19 to IEC 320-C20 Rack Power Cable
4L67A86681	B4L3	4.3m, 16A/100-250V, C19 to IEC 320-C20 Rack Power Cable
Line cords		
40K9777	6276	4.3m, 220-240V, C19 to IRAM 2073 (Argentina) Line cord
40K9773	6284	4.3m, 220-240V, C19 to AS/NZS 3112 (Aus/NZ) Line cord
40K9775	6277	4.3m, 250V, C19 to NBR 14136 (Brazil) Line Cord
40K9774	6288	4.3m, 220-240V, C19 to GB2099.1 (China) Line cord
40K9769	6283	4.3m, 16A/230V, C19 to IEC 309-P+N+G (Den/Sws) Line Cord
40K9766	6279	4.3m, 220-240V, C19 to CEE7-VII (European) Line cord

Part number	Feature code	Description
40K9776	6285	4.3m, 220-240V, C19 to IS6538 (India) Line cord
40K9771	6282	4.3m, 220-240V, C19 to SI 32 (Israel) Line cord
40K9768	6281	4.3m, 220-240V, C19 to CEI 23-16 (Italy) Line cord
40K9770	6280	4.3m, 220-240V, C19 to SABS 164 (South Africa) Line cord
41Y9231	6289	4.3m, 15A/250V, C19 to KSC 8305 (S. Korea) Line Cord
81Y2391	6549	4.3m, 16A/230V, C19 to SEV 1011 (Sws) Line Cord
41Y9230	6287	4.3m, 16A/250V, C19 to CNS 10917-3 (Taiwan) Line Cord
40K9767	6278	4.3m, 220-240V, C19 to BS 1363/A w/13A fuse (UK) Line Cord
40K9772	6275	4.3m, 16A/208V, C19 to NEMA L6-20P (US) Line Cord
00D7197	A1NV	4.3m, 15A/250V, C19 to NEMA 6-15P (US) Line Cord

Systems management

The SR670 V2 contains an integrated service processor, XClarity Controller (XCC), which provides advanced control, monitoring, and alerting functions. The XCC is based on the Pilot4 XE401 baseboard management controller (BMC) using a dual-core ARM Cortex A9 service processor.

Topics in this section:

- Local management
- System status with XClarity Mobile
- Remote management
- Lenovo XClarity Provisioning Manager
- Lenovo XClarity Administrator
- Lenovo XClarity Essentials
- Lenovo XClarity Energy Manager
- Lenovo Capacity Planner

Local management

The SR670 V2 offers a front operator panel with key LED status indicators, as shown in the following figure. Note that the Network LED only shows network activity of the installed OCP network adapter.

Most configurations support front operator ports, mounted in a slot, for local management. The ports are the following:

- USB 2.0 port with support for XClarity Mobile through a tablet or smart phone
- USB 3.1 G1 port
- External diagnostics port
- VGA port

The only configuration that does not support the front operator ports is the one with 8x double-wide GPUs and front I/O slots, since there is no physical space for the operator ports. See the Components and connectors section for the location of the front operator ports in each configuration.

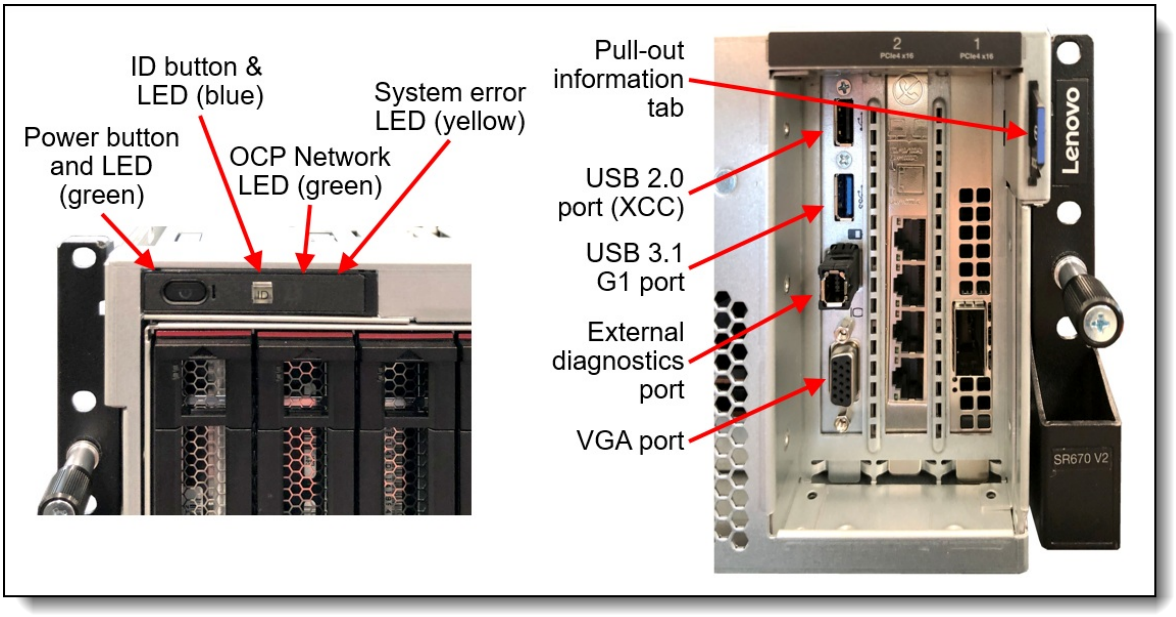

Figure 18. SR670 V2 operator controls

The front operator ports are optional. Ordering information is listed in the following table.

Table 44. Ordering information

Part number	Feature code	Description	SXM model	4-DW GPU model	8-DW GPU model Rear I/O	8-DW GPU model Front I/O
4X97A69628	BG9M	ThinkSystem SR670 V2 Front Video/USB/Diagnostic for 4-DW GPU model	No	Supported	No	No
4X97A69393	BFTE	ThinkSystem SR670 V2 Front Video/USB/Diagnostic for SXM and 8-DW GPU Rear IO model	Supported	No	Supported	No

Light path diagnostics

The server offers light path diagnostics. If an environmental condition exceeds a threshold or if a system component fails, XCC lights LEDs inside the server to help you diagnose the problem and find the failing part. The server has fault LEDs next to the following components:

- Each processor
- Each memory DIMM
- Each drive bay
- Each system fan
- Each power supply

External Diagnostics Handset

SXM models and 4-DW GPU models of the SR670 V2 have a port to connect an External Diagnostics Handset as shown in the following figure. The External Diagnostics Handset has the same functions as the Integrated Diagnostics Panel but has the advantages of not consuming space on the front of the server plus it can be shared amongst many servers in your data center. The handset has a magnet on the back of it to allow you to easily mount it on a convenient place on any rack cabinet.

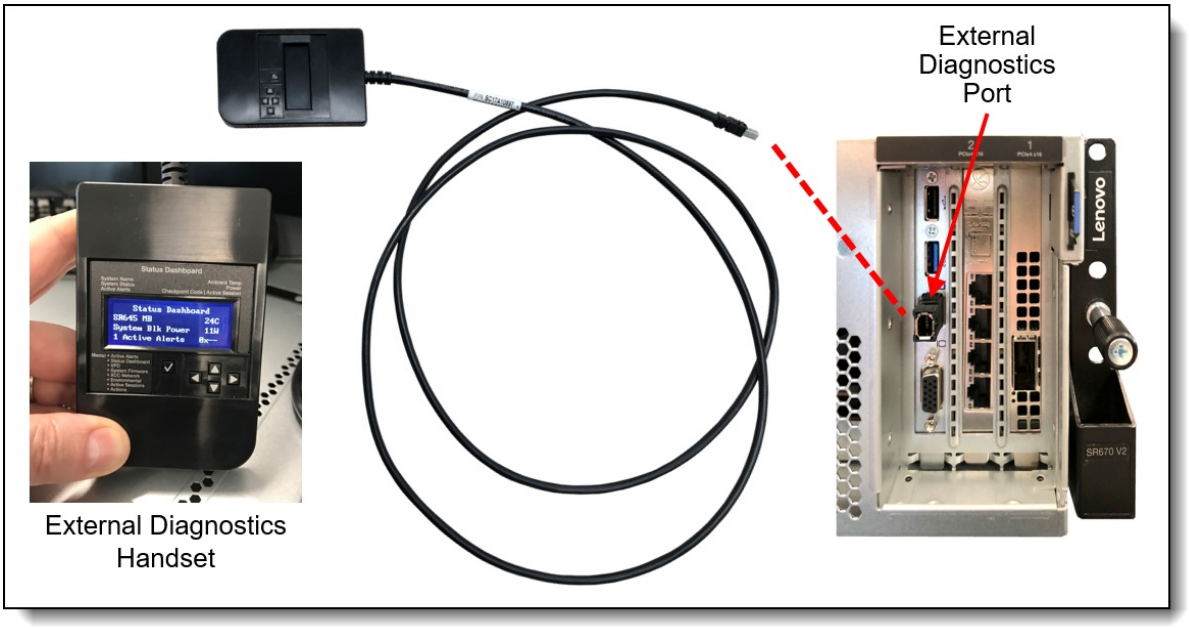

Figure 19. External Diagnostics Handset

Ordering information for the External Diagnostics Handset with is listed in the following table.

Note: The External Diagnostics Handset is not available with configurations supporting 8x double-wide GPUs (8-DW GPU model).

Table 45. External Diagnostics Handset ordering information

Part number	Feature code	Description
4TA7A64874	BEUX	ThinkSystem External Diagnostics Handset

The front of the server also houses an information pull-out tab (also known as the network access tag). See Figures 3 - 5 for the location. A label on the tab shows the network information (MAC address and other data) to remotely access the service processor.

System status with XClarity Mobile

The XClarity Mobile app includes a tethering function where you can connect your Android or iOS device to the server via USB to see the status of the server.

The steps to connect the mobile device are as follows:

1. Enable USB Management on the server, by holding down the ID button for 3 seconds (or pressing the dedicated USB management button if one is present)
2. Connect the mobile device via a USB cable to the server's USB port with the management symbol 
3. In iOS or Android settings, enable Personal Hotspot or USB Tethering
4. Launch the Lenovo XClarity Mobile app

Once connected you can see the following information:

- Server status including error logs (read only, no login required)
- Server management functions (XClarity login credentials required)

Remote management

The server offers a dedicated RJ45 port at the rear of the server for remote management via the XClarity Controller management processor. The port supports 10/100/1000 Mbps speeds.

Remote server management is provided through industry-standard interfaces:

- Intelligent Platform Management Interface (IPMI) Version 2.0
- Simple Network Management Protocol (SNMP) Version 3 (no SET commands; no SNMP v1)
- Common Information Model (CIM-XML)
- Representational State Transfer (REST) support
- Redfish support (DMTF compliant)
- Web browser - HTML 5-based browser interface (Java and ActiveX not required) using a responsive design (content optimized for device being used - laptop, tablet, phone) with NLS support

IPMI via the Ethernet port (IPMI over LAN) is supported, however it is disabled by default. For CTO orders you can specify whether you want to the feature enabled or disabled in the factory, using the feature codes listed in the following table.

Table 46. IPMI-over-LAN settings

Feature code	Description
B7XZ	Disable IPMI-over-LAN (default)
B7Y0	Enable IPMI-over-LAN

There are two XClarity Controller upgrades available for the server, Advanced and Enterprise.

XCC Advanced Upgrade adds the following functions:

- Remotely viewing video with graphics resolutions up to 1600x1200 at 75 Hz with up to 23 bits per pixel, regardless of the system state
- Remotely accessing the server using the keyboard and mouse from a remote client
- International keyboard mapping support
- Syslog alerting
- Redirecting serial console via SSH
- Component replacement log (Maintenance History log)
- Access restriction (IP address blocking)
- Lenovo SED security key management
- Displaying graphics for real-time and historical power usage data and temperature

XCC Enterprise Upgrade enables the following additional features:

- Boot video capture and crash video capture
- Virtual console collaboration - Ability for up to 6 remote users to be log into the remote session simultaneously
- Remote console Java client
- Mapping the ISO and image files located on the local client as virtual drives for use by the server
- Mounting the remote ISO and image files via HTTPS, SFTP, CIFS, and NFS
- Power capping
- System utilization data and graphic view
- Single sign on with Lenovo XClarity Administrator

- Update firmware from a repository
- License for XClarity Energy Manager

For configure-to-order (CTO), you can enable the required XCC functionality by selecting the appropriate XCC feature codes listed in the following table:

- XCC Standard - select neither feature listed in the table
- XCC Advanced - select feature AVUT
- XCC Enterprise - select feature AUPW

Table 47. XClarity Controller upgrades for configure-to-order

Feature code	Description
AVUT	ThinkSystem XClarity Controller Standard to Advanced Upgrade
AUPW	ThinkSystem XClarity Controller Standard to Enterprise Upgrade

For systems with XCC Standard or XCC Advanced installed, field upgrades are available as listed in the following table.

Table 48. XClarity Controller field upgrades

Part number	Description
4L47A09132	ThinkSystem XClarity Controller Standard to Advanced Upgrade (for servers that have XCC Standard)
4L47A09133	ThinkSystem XClarity Controller Advanced to Enterprise Upgrade (for servers that have XCC Advanced)

Lenovo XClarity Provisioning Manager

Lenovo XClarity Provisioning Manager (LXPM) is a UEFI-based application embedded in ThinkSystem servers and accessible via the F1 key during system boot.

LXPM provides the following functions:

- Graphical UEFI Setup
- System inventory information and VPD update
- System firmware updates (UEFI and XCC)
- RAID setup wizard
- OS installation wizard (including unattended OS installation)
- Diagnostics functions

Lenovo XClarity Administrator

Lenovo XClarity Administrator is a centralized resource management solution designed to reduce complexity, speed response, and enhance the availability of Lenovo systems and solutions. It provides agent-free hardware management for ThinkSystem servers, in addition to ThinkServer, System x, and Flex System servers. The administration dashboard is based on HTML 5 and allows fast location of resources so tasks can be run quickly.

Because Lenovo XClarity Administrator does not require any agent software to be installed on the managed endpoints, there are no CPU cycles spent on agent execution, and no memory is used, which means that up to 1GB of RAM and 1 - 2% CPU usage is saved, compared to a typical managed system where an agent is required.

Lenovo XClarity Administrator is an optional software component for the SR670 V2. The software can be downloaded and used at no charge to discover and monitor the SR670 V2 and to manage firmware upgrades.

If software support is required for Lenovo XClarity Administrator, or premium features such as configuration management and operating system deployment are required, Lenovo XClarity Pro software subscription should be ordered. Lenovo XClarity Pro is licensed on a per managed system basis, that is, each managed Lenovo system requires a license.

The following table lists the Lenovo XClarity software license options.

Table 49. Lenovo XClarity Pro ordering information

Part number	Feature code	Description
00MT201	1339	Lenovo XClarity Pro, per Managed Endpoint w/1 Yr SW S&S
00MT202	1340	Lenovo XClarity Pro, per Managed Endpoint w/3 Yr SW S&S
00MT203	1341	Lenovo XClarity Pro, per Managed Endpoint w/5 Yr SW S&S
7S0X000HWW	SAYV	Lenovo XClarity Pro, per Managed Endpoint w/6 Yr SW S&S
7S0X000JWW	SAYW	Lenovo XClarity Pro, per Managed Endpoint w/7 Yr SW S&S

Lenovo XClarity Administrator offers the following standard features that are available at no charge:

- Auto-discovery and monitoring of Lenovo systems
- Firmware updates and compliance enforcement
- External alerts and notifications via SNMP traps, syslog remote logging, and e-mail
- Secure connections to managed endpoints
- NIST 800-131A or FIPS 140-2 compliant cryptographic standards between the management solution and managed endpoints
- Integration into existing higher-level management systems such as cloud automation and orchestration tools through REST APIs, providing extensive external visibility and control over hardware resources
- An intuitive, easy-to-use GUI
- Scripting with Windows PowerShell, providing command-line visibility and control over hardware resources

Lenovo XClarity Administrator offers the following premium features that require an optional Pro license:

- Pattern-based configuration management that allows to define configurations once and apply repeatedly without errors when deploying new servers or redeploying existing servers without disrupting the fabric
- Bare-metal deployment of operating systems and hypervisors to streamline infrastructure provisioning

For more information, refer to the Lenovo XClarity Administrator Product Guide:
http://lenovopress.com/tips1200

Lenovo XClarity Integrators

Lenovo also offers software plug-in modules, Lenovo XClarity Integrators, to manage physical infrastructure from leading external virtualization management software tools including those from Microsoft and VMware.

These integrators are offered at no charge, however if software support is required, a Lenovo XClarity Pro software subscription license should be ordered.

Lenovo XClarity Integrators offer the following additional features:

- Ability to discover, manage, and monitor Lenovo server hardware from VMware vCenter or Microsoft System Center
- Deployment of firmware updates and configuration patterns to Lenovo x86 rack servers and Flex System from the virtualization management tool
- Non-disruptive server maintenance in clustered environments that reduces workload downtime by dynamically migrating workloads from affected hosts during rolling server updates or reboots
- Greater service level uptime and assurance in clustered environments during unplanned hardware events by dynamically triggering workload migration from impacted hosts when impending hardware failures are predicted

For more information about all the available Lenovo XClarity Integrators, see the Lenovo XClarity Administrator Product Guide: https://lenovopress.com/tips1200-lenovo-xclarity-administrator

Lenovo XClarity Essentials

Lenovo offers the following XClarity Essentials software tools that can help you set up, use, and maintain the server at no additional cost:

- Lenovo Essentials OneCLI

  OneCLI is a collection of server management tools that uses a command line interface program to manage firmware, hardware, and operating systems. It provides functions to collect full system health information (including health status), configure system settings, and update system firmware and drivers.

- Lenovo Essentials UpdateXpress

  The UpdateXpress tool is a standalone GUI application for firmware and device driver updates that enables you to maintain your server firmware and device drivers up-to-date and help you avoid unnecessary server outages. The tool acquires and deploys individual updates and UpdateXpress System Packs (UXSPs) which are integration-tested bundles.

- Lenovo Essentials Bootable Media Creator

  The Bootable Media Creator (BOMC) tool is used to create bootable media for offline firmware update.

For more information and downloads, visit the Lenovo XClarity Essentials web page: http://support.lenovo.com/us/en/documents/LNVO-center

Lenovo XClarity Energy Manager

Lenovo XClarity Energy Manager (LXEM) is a power and temperature management solution for data centers. It is an agent-free, web-based console that enables you to monitor and manage power consumption and temperature in your data center through the management console. It enables server density and data center capacity to be increased through the use of power capping.

LXEM is a licensed product. A single-node LXEM license is included with the XClarity Controller Enterprise upgrade as described in the Remote Management section. If your server does not have the XCC Enterprise upgrade, Energy Manager licenses can be ordered as shown in the following table.

Table 50. Lenovo XClarity Energy Manager

Part number	Description
4L40E51621	Lenovo XClarity Energy Manager Node License (1 license needed per server)

For more information about XClarity Energy Manager, see the following resources:

- Lenovo Support page:
  https://datacentersupport.lenovo.com/us/en/solutions/lnvo-lxem
- Lenovo Information Center:
  https://sysmgt.lenovofiles.com/help/topic/LXEM/lxem_overview.html?cp=4

Lenovo Capacity Planner

Lenovo Capacity Planner is a power consumption evaluation tool that enhances data center planning by enabling IT administrators and pre-sales professionals to understand various power characteristics of racks, servers, and other devices. Capacity Planner can dynamically calculate the power consumption, current, British Thermal Unit (BTU), and volt-ampere (VA) rating at the rack level, improving the planning efficiency for large scale deployments.

For more information, refer to the Capacity Planner web page:
http://datacentersupport.lenovo.com/us/en/solutions/lnvo-lcp

Security

The server offers the following electronic security features:

- Administrator and power-on password
- Trusted Platform Module (TPM) supporting TPM 2.0 (no support for TPM 1.2)
- Optional Nationz TPM 2.0, available only in China (CTO only)

The server is NIST SP 800-147B compliant.

The SR670 V2 server also includes the following physical security feature:

- Chassis intrusion switch

The following table lists the security options for the SR670 V2.

Table 51. Security features

Part number	Feature code	Description
CTO only*	B8LE	ThinkSystem Nationz Trusted Platform Module v2.0 (China customers only)

* Not available as a field upgrade. The component is CTO or on pre-configured models only.

Platform Firmware Resiliency - Lenovo ThinkShield

Lenovo's ThinkShield Security is a transparent and comprehensive approach to security that extends to all dimensions of our data center products: from development, to supply chain, and through the entire product lifecycle.

The ThinkSystem SR670 V2 includes Platform Firmware Resiliency (PFR) hardware Root of Trust (RoT) which enables the system to be NIST SP800-193 compliant. This offering further enhances key platform subsystem protections against unauthorized firmware updates and corruption, to restore firmware to an integral state, and to closely monitor firmware for possible compromise from cyber attacks.

PFR operates upon the following server components:

- UEFI image – the low-level server firmware that connects the operating system to the server hardware
- XCC image – the management “engine” software that controls and reports on the server status separate from the server operating system
- FPGA image – the code that runs the server’s lowest level hardware controller on the motherboard

The Lenovo Platform Root of Trust Hardware performs the following three main functions:

- Detection – Measures the firmware and updates for authenticity
- Recovery – Recovers a corrupted image to a known-safe image
- Protection – Monitors the system to ensure the known-good firmware is not maliciously written

These enhanced protection capabilities are implemented using a dedicated, discrete security processor whose implementation has been rigorously validated by leading third-party security firms. Security evaluation results and design details are available for customer review – providing unprecedented transparency and assurance.

The SR670 V2 includes support for Secure Boot, a UEFI firmware security feature developed by the UEFI Consortium that ensures only immutable and signed software are loaded during the boot time. The use of Secure Boot helps prevent malicious code from being loaded and helps prevent attacks, such as the installation of rootkits. Lenovo offers the capability to enable secure boot in the factory, to ensure end-to-end protection. Alternatively, Secure Boot can be left disabled in the factory, allowing the customer to enable it themselves at a later point, if desired.

The following table lists the relevant feature code(s).

Table 52. Secure Boot options

Part number	Feature code	Description	Purpose
CTO only	AUK7	TPM 2.0 and Secure Boot	Configure the system in the factory with Secure Boot enabled.
CTO only	B0MK	Enable TPM 2.0	Configure the system without Secure Boot enabled. Customers can enable Secure Boot later if desired.

Tip: If Secure Boot is not enabled in the factory, it can be enabled later by the customer. However once Secure Boot is enabled, it cannot be disabled.

Intel Transparent Supply Chain

Add a layer of protection in your data center and have peace of mind that the server hardware you bring into it is safe authentic and with documented, testable, and provable origin.

Lenovo has one of the world's best supply chains, as ranked by Gartner Group, backed by extensive and mature supply chain security programs that exceed industry norms and US Government standards. Now we are the first Tier 1 manufacturer to offer Intel® Transparent Supply Chain in partnership with Intel, offering you an unprecedented degree of supply chain transparency and assurance.

To enable Intel Transparent Supply Chain for the Intel-based servers in your order, add the following feature code in the DCSC configurator, under the Security tab.

Table 53. Intel Transparent Supply Chain ordering information

Feature code	Description
BB0P	Intel Transparent Supply Chain

For more information on this offering, see the paper *Introduction to Intel Transparent Supply Chain on Lenovo ThinkSystem Servers*, available from https://lenovopress.com/lp1434-introduction-to-intel-transparent-supply-chain-on-thinksystem-servers.

Security standards

The SR670 V2 supports the following security standards and capabilities:

- **Industry Standard Security Capabilities**
  - Intel CPU Enablement
    - AES-NI (Advanced Encryption Standard New Instructions)
    - CBnT (Converged Boot Guard and Trusted Execution Technology)
    - CET (Control flow Enforcement Technology)
    - Hardware-based side channel attack resilience enhancements
    - MKTME/TME (Multi-Key Total Memory Encryption)
    - SGX (Software Guard eXtensions)
    - SGX-TEM (Trusted Environment Mode)
    - TDX (Trust Domain Extensions)
    - TXT (Trusted eXecution Technology)
    - VT (Virtualization Technology)
    - XD (eXecute Disable)
  - Microsoft Windows Security Enablement
    - Credential Guard
    - Device Guard
    - Host Guardian Service
  - TCG (Trusted Computing Group) TPM (Trusted Platform Module) 2.0
  - UEFI (Unified Extensible Firmware Interface) Forum Secure Boot
- **Hardware Root of Trust and Security**
  - Independent security subsystem providing platform-wide NIST SP800-193 compliant Platform Firmware Resilience (PFR)
  - Management domain RoT supplemented by the Secure Boot features of XCC
- **Platform Security**

  For more information on platform security, see the paper “How to Harden the Security of your ThinkSystem Server and Management Applications” available from https://lenovopress.com/lp1260-how-to-harden-the-security-of-your-thinksystem-server.

  - Boot and run-time firmware integrity monitoring with rollback to known-good firmware (e.g., “self-healing”)
  - Non-volatile storage bus security monitoring and filtering
  - Resilient firmware implementation, such as to detect and defeat unauthorized flash writes or SMM (System Management Mode) memory incursions
  - Patented IPMI KCS channel privileged access authorization (USPTO Patent# 11,256,810)
  - Host and management domain authorization, including integration with CyberArk for enterprise password management
  - KMIP (Key Management Interoperability Protocol) compliant, including support for IBM SKLM and Thales KeySecure
  - Reduced “out of box” attack surface
  - Configurable network services
- **Standards Compliance and/or Support**
  - NIST SP800-131A rev 2 “Transitioning the Use of Cryptographic Algorithms and Key Lengths”
  - NIST SP800-147B “BIOS Protection Guidelines for Servers”
  - NIST SP800-193 “Platform Firmware Resiliency Guidelines”
  - ISO/IEC 11889 “Trusted Platform Module Library”
  - Common Criteria TCG Protection Profile for “PC Client Specific TPM 2.0”
  - European Union Commission Regulation 2019/424 (“ErP Lot 9”) “Ecodesign Requirements for

Servers and Data Storage Products" Secure Data Deletion
    - Optional FIPS 140-2 validated Self-Encrypting Disks (SEDs) with external KMIP-based key management
- **Product and Supply Chain Security**
    - Suppliers validated through Lenovo's Trusted Supplier Program
    - Developed in accordance with Lenovo's Secure Development Lifecycle (LSDL)
    - Continuous firmware security validation through automated testing, including static code analysis, dynamic network and web vulnerability testing, software composition analysis, and subsystem-specific testing, such as UEFI security configuration validation
    - Ongoing security reviews by US-based security experts, with attestation letters available from our third-party security partners
    - Digitally signed firmware, stored and built on US-based infrastructure and signed on US-based Hardware Security Modules (HSMs)
    - Manufacturing transparency via Intel Transparent Supply Chain (for details, see https://lenovopress.com/lp1434-introduction-to-intel-transparent-supply-chain-on-lenovo-thinksystem-servers)
    - TAA (Trade Agreements Act) compliant manufacturing, by default in Mexico for North American markets with additional US and EU manufacturing options
    - US 2019 NDAA (National Defense Authorization Act) Section 889 compliant

Rack installation

The following table lists the rack installation options that are available for the SR670 V2.

Table 54. Rack installation options

Option	Feature Code	Description
Rail Kits		
4M17A69408	BFTL	ThinkSystem SR670 V2 Toolless Slide Rail (contains left & right rails and a screw kit)

The Slide Rail has the following specifications:

- Rail travel distance is 920 mm (36.22 inches)
- Can be installed in both square hole and round hole rack
- Rack cabinet requirements:
    - Minimum depth of 150 mm (5.9 inches) between the front mounting flanges and inside of the front door.
    - Minimum depth of 125 mm (4.9 inches) between the chassis rear wall and inside of the rear door.
    - The maximum distance between the front and rear mounting flanges is 813 mm (32 inches).
    - If you want to install the rails and a 0U PDU into the same rack, the rack must be at least 1185mm (46.7 inches) deep

The following figure shows the SR670 V2 Toolless Slide Rail.

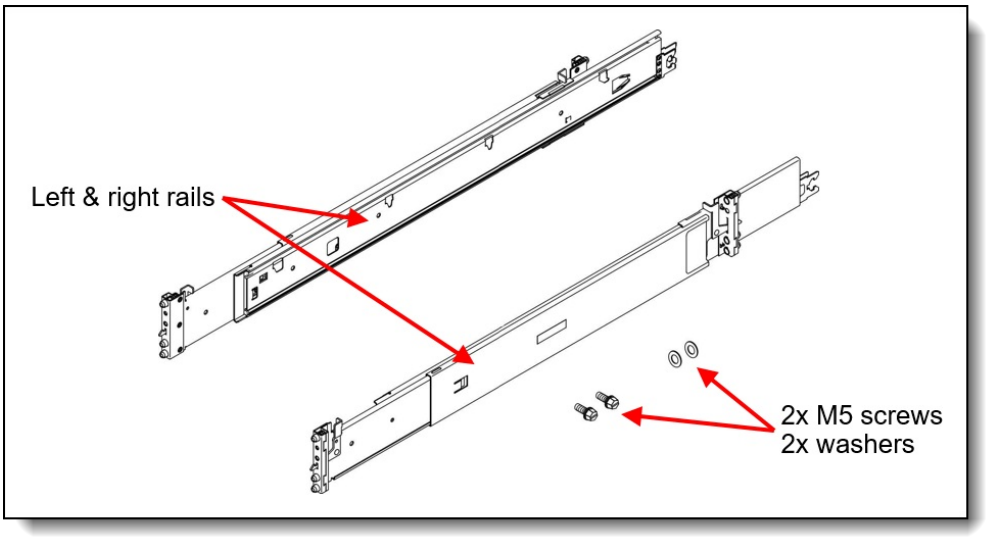

Figure 20. ThinkSystem SR670 V2 Toolless Slide Rail contents

Operating system support

The server supports the following operating systems:

- Microsoft Windows Server 2016
- Microsoft Windows Server 2019
- Microsoft Windows Server 2022
- Red Hat Enterprise Linux 7.9
- Red Hat Enterprise Linux 8.2
- Red Hat Enterprise Linux 8.3
- Red Hat Enterprise Linux 8.4
- Red Hat Enterprise Linux 8.5
- Red Hat Enterprise Linux 8.6
- Red Hat Enterprise Linux 8.7
- Red Hat Enterprise Linux 8.8
- Red Hat Enterprise Linux 9.0
- Red Hat Enterprise Linux 9.1
- Red Hat Enterprise Linux 9.2
- SUSE Linux Enterprise Server 12 SP5
- SUSE Linux Enterprise Server 12 Xen SP5
- SUSE Linux Enterprise Server 15 SP2
- SUSE Linux Enterprise Server 15 SP3
- SUSE Linux Enterprise Server 15 SP4
- SUSE Linux Enterprise Server 15 SP5
- SUSE Linux Enterprise Server 15 Xen SP2
- SUSE Linux Enterprise Server 15 Xen SP3
- SUSE Linux Enterprise Server 15 Xen SP4
- SUSE Linux Enterprise Server 15 Xen SP5
- Ubuntu 18.04 LTS 64-bit
- Ubuntu 22.04 LTS 64-bit
- VMware ESXi 6.7 U3
- VMware ESXi 7.0 U2
- VMware ESXi 7.0 U3
- VMware ESXi 8.0
- VMware ESXi 8.0 U1
- VMware ESXi 8.0 U2

For a complete list of supported, certified and tested operating systems, plus additional details and links to relevant web sites, see the Operating System Interoperability Guide:
https://lenovopress.com/osig#servers=sr670-v2-7z22-7z23

For configure-to-order configurations, the server can be preloaded with VMware ESXi installed on M.2 cards. Ordering information is listed in the following table.

Table 55. VMware ESXi preload

Part number	Feature code	Description
CTO only	B88T	VMware ESXi 6.7 U3 (factory installed)
CTO only	BHSR	VMware ESXi 7.0 U2 (Factory Installed)
CTO only	BMEY	VMware ESXi 7.0 U3 (Factory Installed)
CTO only	BMT5	VMware ESXi 8.0 (Factory Installed)
CTO only	BQ8S	VMware ESXi 8.0 U1 (Factory Installed)

You can download supported VMware vSphere hypervisor images from the following web page and load it on the M.2 drives using the instructions provided:
https://vmware.lenovo.com/content/custom_iso/

Physical and electrical specifications

The SR670 V2 has the following overall physical dimensions, excluding components that extend outside the standard chassis, such as EIA flanges, front security bezel (if any), and power supply handles:

- Width: 448 mm (17.6 inches)
- Height: 131 mm (5.2 inches) (3U)
- Depth: 892 mm (35.1 inches)

The following table lists the detailed dimensions. See the figure below for the definition of each dimension.

Table 56. Detailed dimensions

Dimension	Description
483 mm	X_a = Width, to the outsides of the front EIA flanges
435 mm	X_b = Width, to the rack rail mating surfaces
448 mm	X_c = Width, to the outer most chassis body feature
131 mm	Y_a = Height, from the bottom of chassis to the top of the chassis
825 mm	Z_a = Depth, from the rack flange mating surface to the rearmost I/O port surface
856 mm	Z_b = Depth, from the rack flange mating surface to the rearmost feature of the chassis body
884 mm (1800W PSU) 912 mm (2400W PSU)	Z_c = Depth, from the rack flange mating surface to the rearmost feature such as power supply handle
36 mm	Z_d = Depth, from the forwardmost feature on front of EIA flange to the rack flange mating surface
39 mm	Z_e = Depth, from the front of security bezel (if applicable) or forwardmost feature to the rack flange mating surface

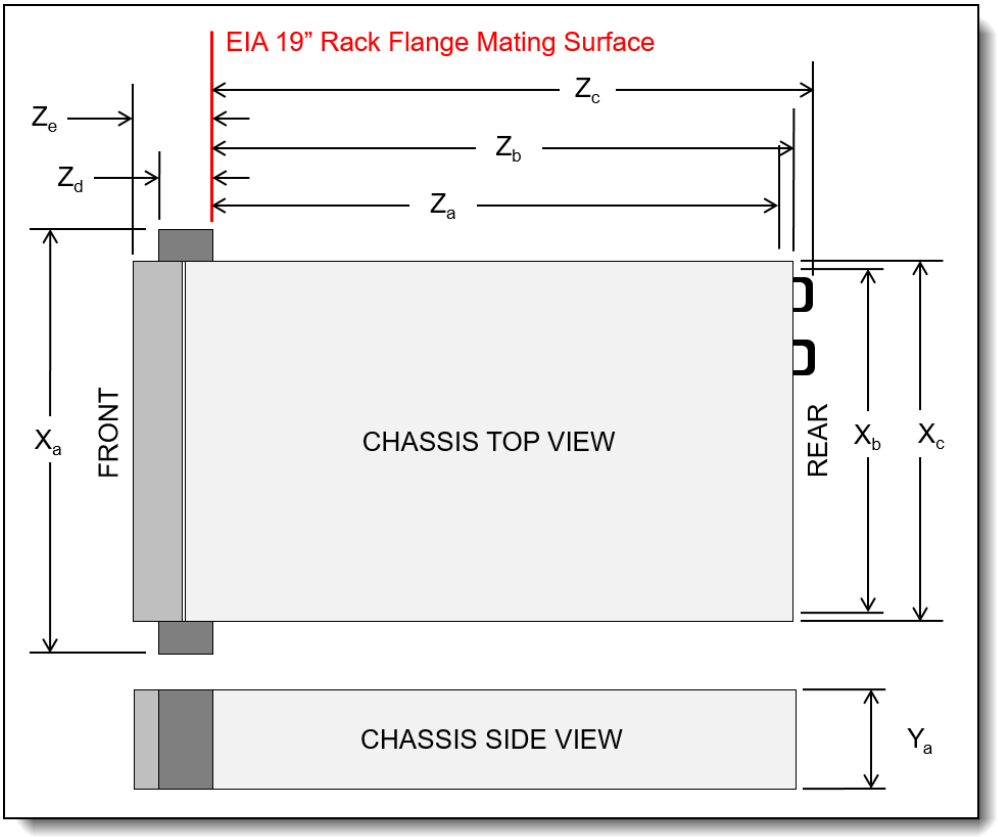

Figure 21. Server dimensions

The shipping dimensions (cardboard packaging) of the SR670 V2 are as follows:

- Width: 592 mm (23.3 inches)
- Height: 343 mm (13.5 inches)
- Depth: 1095 mm (43.1 inches)

The server has the following approximate weight, dependent on the configuration selected:

- SXM model: 39.5 kg (87 lb)
- 4-DW GPU model: 36.7 kg (81 lb)
- 8-DW GPU model: 39 kg (86 lb)

Electrical specifications for AC input power supplies:

- Input voltage:
  - 200 to 240 (nominal) Vac, 50 Hz or 60 Hz
  - 180 to 300 Vdc (China only)
- Inlet current:
  - 1800W power supply: 10 A
  - 2400W power supply: 14 A

Operating environment

The SR670 V2 server complies with ASHRAE Class A2 specifications. System performance may be impacted when operating temperature is outside ASHRAE A2 specification.

Configuration restrictions

- With NVIDIA HGX A100 80GB 500W 4-GPU Board (feature BHT3) installed, if the ambient temperature is above 30°C, the GPUs may be instructed by the system to enter an emergency power reduction state whereby GPU performance will be impacted.

Temperature and humidity

The server is supported in the following environment:

- Air temperature:
  - Operating:
    - ASHRAE Class A2: 10°C to 35°C (50°F to 95°F); the maximum ambient temperature decreases by 1°C for every 300 m (984 ft) increase in altitude above 900 m (2,953 ft).
  - Server off: 5°C to 45°C (41°F to 113°F)
  - Shipment/storage: -40°C to 60°C (-40°F to 140°F)
- Maximum altitude: 3,050 m (10,000 ft)
- Relative Humidity (non-condensing):
  - Operating:
    - ASHRAE Class A2: 8% to 80%; maximum dew point: 21°C (70°F)
  - Shipment/storage: 8% to 90%

Heat output

The server generates the following heat:

- Heat/thermal output:
  - 2x 2400W power supplies: 8802 BTU/hr, 2580 W
  - 4x 2400W power supplies: 17609 BTU/hr, 5161 W

Acoustical noise emissions

The server has the following acoustic noise emissions declaration:

- Sound power level (L_{WAd}):
  - Idling: 7.0 Bel (SXM), 7.0 Bel (GPU Typical), 7.8 Bel (GPU Max)
  - Operating: 8.3 Bel (SXM), 8.1 Bel (GPU Typical), 8.6 Bel (GPU Max)
- Sound pressure level (L_{pAm}):
  - Idling: 54 dBA (SXM), 54 dBA (GPU Typical), 64 dBA (GPU Max)
  - Operating: 69 dBA (SXM), 66 dBA (GPU Typical), 72 dBA (GPU Max)

Notes:

- These sound levels were measured in controlled acoustical environments according to procedures specified by ISO7779 and are reported in accordance with ISO 9296.
- The declared acoustic sound levels are based on the following configurations, which may change slightly depending on configuration/conditions.
  - SXM configuration: 2x 270W processors, 32x 64 GB DIMMs, 8x HDD or SSD, NVIDIA SXM4 400W, 2x 1-port ConnectX-6 HDR VPI adapter
  - GPU Typical configuration: 2x 205W processors, 32x 64 GB DIMMs, Diskless with M.2 or any disk, 4x or 8x NVIDIA A100, Intel E810-DA2 10/25GbE SFP28 2-port Ethernet Adapter
  - GPU Max configuration: 2x 270W processors, 32x 64 GB DIMMs, 8x NVMe SSDs, 4x or 8x NVIDIA A40s, Mellanox ConnectX-6 Lx 10/25GbE SFP28 2-port
- The declared acoustic noise levels may increase greatly, if high-power components are installed such as high-power NICs, high-power processors and GPUs.

- Government regulations (such as those prescribed by OSHA or European Community Directives) may govern noise level exposure in the workplace and may apply to you and your server installation. The actual sound pressure levels in your installation depend upon a variety of factors, including the number of racks in the installation; the size, materials, and configuration of the room; the noise levels from other equipment; the room ambient temperature, and employee's location in relation to the equipment. Further, compliance with such government regulations depends on a variety of additional factors, including the duration of employees' exposure and whether employees wear hearing protection. Lenovo recommends that you consult with qualified experts in this field to determine whether you are in compliance with the applicable regulations.

Shock and vibration

The server has the following vibration and shock limits:

- Vibration:
  - Operating: 0.21 G rms at 5 Hz to 500 Hz for 15 minutes across 3 axes
  - Non-operating: 1.04 G rms at 2 Hz to 200 Hz for 15 minutes across 6 surfaces
- Shock:
  - Operating: 15 G for 3 milliseconds in each direction (positive and negative X, Y, and Z axes)
  - Non-operating:
    - 23 kg - 31 kg: 35 G for 152 in./sec velocity change across 6 surfaces (3x GPU config, 2.5” config)
    - 32 kg - 68 kg: 35 G for 136 in./sec velocity change across 6 surfaces (20x 3.5” HDD config)

Particulate contamination

Airborne particulates (including metal flakes or particles) and reactive gases acting alone or in combination with other environmental factors such as humidity or temperature might damage the system that might cause the system to malfunction or stop working altogether.

The following specifications indicate the limits of particulates that the system can tolerate:

- Reactive gases:
  - The reactivity rate of copper coupons shall be less than 200 Angstroms per month (Å/month)
  - The reactivity rate of silver coupons shall be less than 200 Å/month
- Airborne particulates:
  - The room air should be continuously filtered with MERV 8 filters.
  - Air entering a data center should be filtered with MERV 11 or preferably MERV 13 filters.
  - The deliquescent relative humidity of the particulate contamination should be more than 60% RH
  - Data centers must be free of zinc whiskers

For additional information, see the Specifications section of the Setup Guide for the server, available from the Lenovo Documents site, https://pubs.lenovo.com/

Warranty and Support

The SR670 V2 has a 1-year or 3-year warranty based on the machine type of the system:

- 7Z22 - 1 year warranty
- 7Z23 - 3 year warranty

The standard warranty terms are customer-replaceable unit (CRU) and onsite (for field-replaceable units FRUs only) with standard call center support during normal business hours and 9x5 Next Business Day Parts Delivered.

Lenovo's additional support services provide a sophisticated, unified support structure for your data center, with an experience consistently ranked number one in customer satisfaction worldwide. Available offerings include:

- **Premier Support**

  Premier Support provides a Lenovo-owned customer experience and delivers direct access to technicians skilled in hardware, software, and advanced troubleshooting, in addition to the following:

  - Direct technician-to-technician access through a dedicated phone line
  - 24x7x365 remote support
  - Single point of contact service
  - End to end case management
  - Third-party collaborative software support
  - Online case tools and live chat support
  - On-demand remote system analysis

- **Warranty Upgrade (Preconfigured Support)**

  Services are available to meet the on-site response time targets that match the criticality of your systems.

  - 3, 4, or 5 years of service coverage
  - 1-year or 2-year post-warranty extensions
  - **Foundation Service**: 9x5 service coverage with next business day onsite response. YourDrive YourData is an optional extra (see below).
  - **Essential Service:** 24x7 service coverage with 4-hour onsite response or 24-hour committed repair (available only in select markets). Bundled with YourDrive YourData.
  - **Advanced Service:** 24x7 service coverage with 2-hour onsite response or 6-hour committed repair (available only in select markets). Bundled with YourDrive YourData.

- **Managed Services**

  Lenovo Managed Services provides continuous 24x7 remote monitoring (plus 24x7 call center availability) and proactive management of your data center using state-of-the-art tools, systems, and practices by a team of highly skilled and experienced Lenovo services professionals.

  Quarterly reviews check error logs, verify firmware & OS device driver levels, and software as needed. We'll also maintain records of latest patches, critical updates, and firmware levels, to ensure you systems are providing business value through optimized performance.

- **Technical Account Management (TAM)**

  A Lenovo Technical Account Manager helps you optimize the operation of your data center based on a deep understanding of your business. You gain direct access to your Lenovo TAM, who serves as your single point of contact to expedite service requests, provide status updates, and furnish reports to track incidents over time. In addition, your TAM will help proactively make service recommendations and manage your service relationship with Lenovo to make certain your needs are met.

- **Enterprise Server Software Support**

  Enterprise Software Support is an additional support service providing customers with software support on Microsoft, Red Hat, SUSE, and VMware applications and systems. Around the clock availability for critical problems plus unlimited calls and incidents helps customers address challenges fast, without incremental costs. Support staff can answer troubleshooting and diagnostic questions, address product comparability and interoperability issues, isolate causes of problems, report defects to software vendors, and more.

- **YourDrive YourData**

  Lenovo's YourDrive YourData is a multi-drive retention offering that ensures your data is always under your control, regardless of the number of drives that are installed in your Lenovo server. In the unlikely event of a drive failure, you retain possession of your drive while Lenovo replaces the failed drive part. Your data stays safely on your premises, in your hands. The YourDrive YourData service can be purchased in convenient bundles and is optional with Foundation Service. It is bundled with Essential Service and Advanced Service.

- **Health Check**

  Having a trusted partner who can perform regular and detailed health checks is central to maintaining efficiency and ensuring that your systems and business are always running at their best. Health Check supports Lenovo-branded server, storage, and networking devices, as well as select Lenovo-supported products from other vendors that are sold by Lenovo or a Lenovo-Authorized Reseller.

Examples of region-specific warranty terms are second or longer business day parts delivery or parts-only base warranty.

If warranty terms and conditions include onsite labor for repair or replacement of parts, Lenovo will dispatch a service technician to the customer site to perform the replacement. Onsite labor under base warranty is limited to labor for replacement of parts that have been determined to be field-replaceable units (FRUs). Parts that are determined to be customer-replaceable units (CRUs) do not include onsite labor under base warranty.

If warranty terms include parts-only base warranty, Lenovo is responsible for delivering only replacement parts that are under base warranty (including FRUs) that will be sent to a requested location for self-service. Parts-only service does not include a service technician being dispatched onsite. Parts must be changed at customer's own cost and labor and defective parts must be returned following the instructions supplied with the spare parts.

Lenovo Service offerings are region-specific. Not all preconfigured support and upgrade options are available in every region. For information about Lenovo service upgrade offerings that are available in your region, refer to the following resources:

- Service part numbers in Lenovo Data Center Solution Configurator (DCSC):
  http://dcsc.lenovo.com/#/services
- Lenovo Services Availability Locator
  http://lenovolocator.com/

For service definitions, region-specific details, and service limitations, please refer to the following documents:

- Lenovo Statement of Limited Warranty for Infrastructure Solutions Group (ISG) Servers and System Storage
  http://pcsupport.lenovo.com/us/en/solutions/ht503310
- Lenovo Data Center Services Agreement
  http://support.lenovo.com/us/en/solutions/ht116628

Services

Lenovo Services is a dedicated partner to your success. Our goal is to reduce your capital outlays, mitigate your IT risks, and accelerate your time to productivity.

Note: Some service options may not be available in all markets or regions. For more information, go to https://www.lenovo.com/services. For information about Lenovo service upgrade offerings that are available in your region, contact your local Lenovo sales representative or business partner.

Here's a more in-depth look at what we can do for you:

- **Asset Recovery Services**

  Asset Recovery Services (ARS) helps customers recover the maximum value from their end-of-life equipment in a cost-effective and secure way. On top of simplifying the transition from old to new equipment, ARS mitigates environmental and data security risks associated with data center equipment disposal. Lenovo ARS is a cash-back solution for equipment based on its remaining market value, yielding maximum value from aging assets and lowering total cost of ownership for your customers. For more information, see the ARS page, https://lenovopress.com/lp1266-reduce-e-waste-and-grow-your-bottom-line-with-lenovo-ars.

- **Assessment Services**

  An Assessment helps solve your IT challenges through an onsite, multi-day session with a Lenovo technology expert. We perform a tools-based assessment which provides a comprehensive and thorough review of a company's environment and technology systems. In addition to the technology based functional requirements, the consultant also discusses and records the non-functional business requirements, challenges, and constraints. Assessments help organizations like yours, no matter how large or small, get a better return on your IT investment and overcome challenges in the ever-changing technology landscape.

- **Design Services**

  Professional Services consultants perform infrastructure design and implementation planning to support your strategy. The high-level architectures provided by the assessment service are turned into low level designs and wiring diagrams, which are reviewed and approved prior to implementation. The implementation plan will demonstrate an outcome-based proposal to provide business capabilities through infrastructure with a risk-mitigated project plan.

- **Basic Hardware Installation**

  Lenovo experts can seamlessly manage the physical installation of your server, storage, or networking hardware. Working at a time convenient for you (business hours or off shift), the technician will unpack and inspect the systems on your site, install options, mount in a rack cabinet, connect to power and network, check and update firmware to the latest levels, verify operation, and dispose of the packaging, allowing your team to focus on other priorities.

- **Deployment Services**

  When investing in new IT infrastructures, you need to ensure your business will see quick time to value with little to no disruption. Lenovo deployments are designed by development and engineering teams who know our Products & Solutions better than anyone else, and our technicians own the process from delivery to completion. Lenovo will conduct remote preparation and planning, configure & integrate systems, validate systems, verify and update appliance firmware, train on administrative tasks, and provide post-deployment documentation. Customer’s IT teams leverage our skills to enable IT staff to transform with higher level roles and tasks.

- **Integration, Migration, and Expansion Services**

  Move existing physical & virtual workloads easily, or determine technical requirements to support increased workloads while maximizing performance. Includes tuning, validation, and documenting ongoing run processes. Leverage migration assessment planning documents to perform necessary migrations.

Regulatory compliance

The SR670 V2 conforms to the following standards:

- ANSI/UL 62368-1
- IEC 62368-1 (CB Certificate and CB Test Report)
- FCC - Verified to comply with Part 15 of the FCC Rules, Class A
- Canada ICES-003, issue 7, Class A
- CSA C22.2 No. 62368-1
- CISPR 32, Class A, CISPR 35
- Japan VCCI, Class A
- Taiwan BSMI CNS13438, Class A; CNS14336-1; Section 5 of CNS15663
- CE, UKCA Mark (EN55032 Class A, EN62368-1, EN55024, EN55035, EN61000-3-2, EN61000-3-3, (EU) 2019/424, and EN50581-1 (RoHS))
- Korea KN32, Class A, KN35
- Russia, Belorussia and Kazakhstan, TP EAC 037/2016 (for RoHS)
- Russia, Belorussia and Kazakhstan, EAC: TP TC 004/2011 (for Safety); TP TC 020/2011 (for EMC)
- Australia/New Zealand AS/NZS CISPR 32, Class A; AS/NZS 62368.1
- UL Green Guard, UL2819
- Energy Star 3.0
- EPEAT (NSF/ ANSI 426) Bronze
- China CCC certificate, GB17625.1; GB4943.1; GB/T9254
- China CECP certificate, CQC3135
- China CELP certificate, HJ 2507-2011
- Japanese Energy-Saving Act
- Mexico NOM-019
- India BIS 13252 (Part 1)
- Germany GS

External drive enclosures

The server supports attachment to external drive enclosures using a RAID controller with external ports or a SAS host bus adapter. Adapters supported by the server are listed in the SAS adapters for external storage section.

Note: Information provided in this section is for ordering reference purposes only. For the operating system and adapter support details, refer to the interoperability matrix for a particular storage enclosure that can be found on the Lenovo Data Center Support web site:
http://datacentersupport.lenovo.com

Table 57. External drive enclosures

Model	Description
4587HC1	Lenovo Storage D1212 Disk Expansion Enclosure (2U enclosure wth 12x LFF drive bays)
4587HC2	Lenovo Storage D1224 Disk Expansion Enclosure (2U enclosure wth 24x SFF drive bays)
6413HC1	Lenovo Storage D3284 High Density Expansion Enclosure (5U enclosure wth 84x LFF drive bays)
7DAHCTO1WW	Lenovo ThinkSystem D4390 Direct Attached Storage (4U enclosure wth 90x LFF drive bays)

For details about supported drives, adapters, and cables, see the following Lenovo Press Product Guides:

- Lenovo Storage D1212 and D1224
  http://lenovopress.lenovo.com/lp0512
- Lenovo Storage D3284
  http://lenovopress.lenovo.com/lp0513
- Lenovo ThinkSystem D4390
  https://lenovopress.lenovo.com/lp1681

External storage systems

Lenovo offers the ThinkSystem DE Series and ThinkSystem DM Series external storage systems for high-performance storage. See the DE Series and DM Series product guides for specific controller models, expansion enclosures and configuration options:

- ThinkSystem DE Series Storage
  https://lenovopress.com/storage/thinksystem/de-series#rt=product-guide
- ThinkSystem DM Series Storage
  https://lenovopress.com/storage/thinksystem/dm-series#rt=product-guide

External backup units

The server supports both USB-attached RDX backup units and SAS-attached tape drives.

The following table lists the available external SAS tape backup options.

Tip: Verify the end-to-end support of an IBM tape backup solution through the IBM System Storage Interoperation Center (SSIC): http://www.ibm.com/systems/support/storage/ssic

Table 58. External SAS backup options

Part number	Description
External SAS tape backup drives	
6160S7E	IBM TS2270 Tape Drive Model H7S
6160S8E	IBM TS2280 Tape Drive Model H8S
6160S9E	IBM TS2290 Tape Drive Model H9S
External SAS tape backup autoloaders	
6171S7R	IBM TS2900 Tape Autoloader w/LTO7 HH SAS
6171S8R	IBM TS2900 Tape Autoloader w/LTO8 HH SAS
6171S9R	IBM TS2900 Tape Autoloader w/LTO9 HH SAS
External tape backup libraries	
6741A1F	IBM TS4300 3U Tape Library-Base Unit
SAS backup drives for TS4300 Tape Library	
01KP937	LTO 7 HH SAS Drive
01KP953	LTO 8 HH SAS Drive
02JH836	LTO 9 HH SAS Drive

For more information, see the list of Product Guides in the Backup units category:
https://lenovopress.com/servers/options/backup

The following table lists the external RDX backup options available.

Table 59. External RDX dock and cartridges

Part number	Feature code	Description
External RDX docks		
4T27A10725	B32R	ThinkSystem RDX External USB 3.0 Dock (No cartridge included with the drive)
Cartridges		
7TP7A01601	AVF8	ThinkSystem RDX 500GB Cartridge
7TP7A01602	AVF1	ThinkSystem RDX 1TB Cartridge
7TP7A01603	AVF0	ThinkSystem RDX 2TB Cartridge
7TP7A04318	AXD1	ThinkSystem RDX 4TB Cartridge

For more information, see the Lenovo RDX USB 3.0 Disk Backup Solution product guide:
https://lenovopress.com/tips0894-rdx-usb-30

Uninterruptible power supply units

The following table lists the uninterruptible power supply (UPS) units that are offered by Lenovo.

Table 60. Uninterruptible power supply units

Part number	Description
55941KX	RT1.5kVA 2U Rack or Tower UPS (200-240VAC)
55942KX	RT2.2kVA 2U Rack or Tower UPS (200-240VAC)
55943KX	RT3kVA 2U Rack or Tower UPS (200-240VAC)
55945KX	RT5kVA 3U Rack or Tower UPS (200-240VAC)
55946KX	RT6kVA 3U Rack or Tower UPS (200-240VAC)
55948KX	RT8kVA 6U Rack or Tower UPS (200-240VAC)
55949KX	RT11kVA 6U Rack or Tower UPS (200-240VAC)
55948PX	RT8kVA 6U 3:1 Phase Rack or Tower UPS (380-415VAC)
55949PX	RT11kVA 6U 3:1 Phase Rack or Tower UPS (380-415VAC)
55943KT†	ThinkSystem RT3kVA 2U Standard UPS (200-230VAC) (2x C13 10A, 2x GB 10A, 1x C19 16A outlets)
55943LT†	ThinkSystem RT3kVA 2U Long Backup UPS (200-230VAC) (2x C13 10A, 2x GB 10A, 1x C19 16A outlets)
55946KT†	ThinkSystem RT6kVA 5U UPS (200-230VAC) (2x C13 10A outlets, 1x Terminal Block output)
5594XKT†	ThinkSystem RT10kVA 5U UPS (200-230VAC) (2x C13 10A outlets, 1x Terminal Block output)

† Only available in China and the Asia Pacific market.

For more information, see the list of Product Guides in the UPS category:
https://lenovopress.com/servers/options/ups

Power distribution units

The following table lists the power distribution units (PDUs) that are offered by Lenovo.

Table 61. Power distribution units

Part number	Feature code	Description	ANZ	ASEAN	Brazil	EET	MEA	RUCIS	WE	HTK	INDIA	JAPAN	LA	NA	PRC
0U Basic PDUs															
00YJ776	ATZY	0U 36 C13/6 C19 24A 1 Phase PDU	N	Y	Y	N	N	N	N	N	N	Y	Y	Y	N
00YJ777	ATZZ	0U 36 C13/6 C19 32A 1 Phase PDU	Y	Y	N	Y	Y	Y	Y	Y	Y	N	N	Y	Y
0U Switched and Monitored PDUs															
00YJ783	AU04	0U 12 C13/12 C19 Switched and Monitored 48A 3 Phase PDU	N	N	Y	N	N	N	Y	N	N	Y	Y	Y	N
00YJ781	AU03	0U 20 C13/4 C19 Switched and Monitored 24A 1 Phase PDU	N	N	Y	N	Y	N	Y	N	N	Y	Y	Y	N
1U Switched and Monitored PDUs															
4PU7A81117	BNDV	1U 18 C19/C13 switched and monitored 48A 3P WYE PDU - ETL	N	N	N	N	N	N	N	N	N	N	N	Y	N
4PU7A77467	BLC4	1U 18 C19/C13 Switched and Monitored 80A 3P Delta PDU	N	N	N	N	N	N	N	N	N	Y	N	Y	N
4PU7A77469	BLC6	1U 12 C19/C13 switched and monitored 60A 3P Delta PDU	N	N	N	N	N	N	N	N	N	N	N	Y	N
4PU7A77468	BLC5	1U 12 C19/C13 switched and monitored 32A 3P WYE PDU	Y	Y	Y	Y	Y	Y	Y	Y	Y	N	Y	Y	Y
4PU7A81118	BNDW	1U 18 C19/C13 switched and monitored 48A 3P WYE PDU - CE	Y	Y	Y	Y	Y	Y	Y	Y	Y	N	Y	N	Y
1U Ultra Density Enterprise PDUs (9x IEC 320 C13 + 3x IEC 320 C19 outlets)															
71763NU	6051	Ultra Density Enterprise C19/C13 PDU 60A/208V/3PH	N	N	Y	N	N	N	N	N	N	Y	Y	Y	N
71762NX	6091	Ultra Density Enterprise C19/C13 PDU Module	Y	Y	Y	Y	Y	Y	Y	Y	Y	Y	Y	Y	Y
1U C13 Enterprise PDUs (12x IEC 320 C13 outlets)															
39Y8941	6010	DPI C13 Enterprise PDU Module (WW)	Y	Y	Y	Y	Y	Y	Y	Y	Y	Y	Y	Y	Y
1U Front-end PDUs (3x IEC 320 C19 outlets)															
39Y8939	6003	DPI Single-phase 30A/208V Front-end PDU (US)	Y	Y	Y	Y	Y	Y	Y	Y	Y	Y	Y	Y	Y
39Y8934	6005	DPI Single-phase 32A/230V Front-end PDU (International)	Y	Y	Y	Y	Y	Y	Y	Y	Y	Y	Y	Y	Y
39Y8940	6004	DPI Single-phase 60A/208V Front-end PDU (US)	Y	N	Y	Y	Y	Y	Y	N	N	Y	Y	Y	N
39Y8935	6006	DPI Single-phase 63A/230V Front-end PDU (International)	Y	Y	Y	Y	Y	Y	Y	Y	Y	Y	Y	Y	Y
Line cords for 1U PDUs that ship without a line cord															
40K9611	6504	4.3m, 32A/380-415V, EPDU/IEC 309 3P+N+G 3ph wye (non-US) Line Cord	Y	Y	Y	Y	Y	Y	Y	Y	Y	Y	Y	Y	Y

Part number	Feature code	Description	ANZ	ASEAN	Brazil	EET	MEA	RUCIS	WE	HTK	INDIA	JAPAN	LA	NA	PRC
40K9612	6502	4.3m, 32A/230V, EPDU to IEC 309 P+N+G (non-US) Line Cord	Y	Y	Y	Y	Y	Y	Y	Y	Y	Y	Y	Y	Y
40K9613	6503	4.3m, 63A/230V, EPDU to IEC 309 P+N+G (non-US) Line Cord	Y	Y	Y	Y	Y	Y	Y	Y	Y	Y	Y	Y	Y
40K9614	6500	4.3m, 30A/208V, EPDU to NEMA L6-30P (US) Line Cord	Y	Y	Y	Y	Y	Y	Y	Y	Y	Y	Y	Y	Y
40K9615	6501	4.3m, 60A/208V, EPDU to IEC 309 2P+G (US) Line Cord	N	N	Y	N	N	N	Y	N	N	Y	Y	Y	N
40K9617	6505	4.3m, 32A/230V, Souriau UTG Female to AS/NZ 3112 (Aus/NZ) Line Cord	Y	Y	Y	Y	Y	Y	Y	Y	Y	Y	Y	Y	Y
40K9618	6506	4.3m, 32A/250V, Souriau UTG Female to KSC 8305 (S. Korea) Line Cord	Y	Y	Y	Y	Y	Y	Y	Y	Y	Y	Y	Y	Y

For more information, see the Lenovo Press documents in the PDU category:
https://lenovopress.com/servers/options/pdu

Rack cabinets

To use the SR670 V2 and rail kit with 0U PDUs, the rack cabinet needs to be at least 1185mm (46.7 inches) deep. An 1100mm rack cabinet does not provide sufficient depth.

The following table lists the supported rack cabinets.

Table 62. Rack cabinets

Part number	Description
93072RX	25U Standard Rack (1000mm)
93072PX	25U Static S2 Standard Rack (1000mm)
7D6DA007WW	ThinkSystem 42U Onyx Primary Heavy Duty Rack Cabinet (1200mm)
7D6DA008WW	ThinkSystem 42U Pearl Primary Heavy Duty Rack Cabinet (1200mm)
93604PX	42U 1200mm Deep Dynamic Rack
93614PX	42U 1200mm Deep Static Rack
93634PX	42U 1100mm Dynamic Rack
93634EX	42U 1100mm Dynamic Expansion Rack
93074RX	42U Standard Rack (1000mm)
7D6EA009WW	ThinkSystem 48U Onyx Primary Heavy Duty Rack Cabinet (1200mm)
7D6EA00AWW	ThinkSystem 48U Pearl Primary Heavy Duty Rack Cabinet (1200mm)

For specifications about these racks, see the Lenovo Rack Cabinet Reference, available from:
https://lenovopress.com/lp1287-lenovo-rack-cabinet-reference

For more information, see the list of Product Guides in the Rack cabinets category:
https://lenovopress.com/servers/options/racks

KVM console options

The following table lists the supported KVM consoles.

Table 63. KVM console

Part number	Description
4XF7A84188	ThinkSystem 18.5" LCD Console (with US English keyboard)

The following table lists the available KVM switches and the options that are supported with them.

Table 65. KVM switches and options

Part number	Description
KVM Console switches	
1754D2X	Global 4x2x32 Console Manager (GCM32)
1754D1X	Global 2x2x16 Console Manager (GCM16)
1754A2X	Local 2x16 Console Manager (LCM16)
1754A1X	Local 1x8 Console Manager (LCM8)
Cables for GCM and LCM Console switches	
46M5383	Virtual Media Conversion Option Gen2 (VCO2)
46M5382	Serial Conversion Option (SCO)

For more information, see the list of Product Guides in the KVM Switches and Consoles category:
http://lenovopress.com/servers/options/kvm

Lenovo Financial Services

Lenovo Financial Services reinforces Lenovo's commitment to deliver pioneering products and services that are recognized for their quality, excellence, and trustworthiness. Lenovo Financial Services offers financing solutions and services that complement your technology solution anywhere in the world.

We are dedicated to delivering a positive finance experience for customers like you who want to maximize your purchase power by obtaining the technology you need today, protect against technology obsolescence, and preserve your capital for other uses.

We work with businesses, non-profit organizations, governments and educational institutions to finance their entire technology solution. We focus on making it easy to do business with us. Our highly experienced team of finance professionals operates in a work culture that emphasizes the importance of providing outstanding customer service. Our systems, processes and flexible policies support our goal of providing customers with a positive experience.

We finance your entire solution. Unlike others, we allow you to bundle everything you need from hardware and software to service contracts, installation costs, training fees, and sales tax. If you decide weeks or months later to add to your solution, we can consolidate everything into a single invoice.

Our Premier Client services provide large accounts with special handling services to ensure these complex transactions are serviced properly. As a premier client, you have a dedicated finance specialist who manages your account through its life, from first invoice through asset return or purchase. This specialist develops an in-depth understanding of your invoice and payment requirements. For you, this dedication provides a high-quality, easy, and positive financing experience.

For your region-specific offers, please ask your Lenovo sales representative or your technology provider about the use of Lenovo Financial Services. For more information, see the following Lenovo website:

https://www.lenovo.com/us/en/landingpage/lenovo-financial-services/

Related publications and links

For more information, see these resources:

- ThinkSystem SR670 V2 product page:
  https://www.lenovo.com/us/en/data-center/servers/racks/ThinkSystem-SR670-V2/p/77XX7SR67V2
- ThinkSystem SR670 V2 datasheet
  https://lenovopress.com/ds0123
- Interactive 3D Tour of the ThinkSystem SR670 V2:
  https://lenovopress.com/lp1425
- ThinkSystem SR670 V2 drivers and support
  http://datacentersupport.lenovo.com/products/servers/thinksystem/sr670v2/7z23/downloads
- Lenovo Hardware Installation & Removal Videos on the SR670 V2:
  - YouTube: https://www.youtube.com/playlist?list=PLYV5R7hVcs-BXei6L6c05osQVLt4w5XYx
- Lenovo ThinkSystem SR670 V2 product publications:
  http://thinksystem.lenovofiles.com/help/index.jsp
  - Quick Start
  - Rack Installation Guide
  - Setup Guide
  - Hardware Maintenance Manual
  - Messages and Codes Reference
  - Memory Population Reference
- ServerProven hardware compatibility:
  http://www.lenovo.com/us/en/serverproven

Related product families

Product families related to this document are the following:

- 2-Socket Rack Servers
- High Performance Computing
- ThinkSystem SR670 V2 Server

Notices

Lenovo may not offer the products, services, or features discussed in this document in all countries. Consult your local Lenovo representative for information on the products and services currently available in your area. Any reference to a Lenovo product, program, or service is not intended to state or imply that only that Lenovo product, program, or service may be used. Any functionally equivalent product, program, or service that does not infringe any Lenovo intellectual property right may be used instead. However, it is the user's responsibility to evaluate and verify the operation of any other product, program, or service. Lenovo may have patents or pending patent applications covering subject matter described in this document. The furnishing of this document does not give you any license to these patents. You can send license inquiries, in writing, to:

Lenovo (United States), Inc.
8001 Development Drive
Morrisville, NC 27560
U.S.A.
Attention: Lenovo Director of Licensing

LENOVO PROVIDES THIS PUBLICATION ”AS IS” WITHOUT WARRANTY OF ANY KIND, EITHER EXPRESS OR IMPLIED, INCLUDING, BUT NOT LIMITED TO, THE IMPLIED WARRANTIES OF NON-INFRINGEMENT, MERCHANTABILITY OR FITNESS FOR A PARTICULAR PURPOSE. Some jurisdictions do not allow disclaimer of express or implied warranties in certain transactions, therefore, this statement may not apply to you.

This information could include technical inaccuracies or typographical errors. Changes are periodically made to the information herein; these changes will be incorporated in new editions of the publication. Lenovo may make improvements and/or changes in the product(s) and/or the program(s) described in this publication at any time without notice.

The products described in this document are not intended for use in implantation or other life support applications where malfunction may result in injury or death to persons. The information contained in this document does not affect or change Lenovo product specifications or warranties. Nothing in this document shall operate as an express or implied license or indemnity under the intellectual property rights of Lenovo or third parties. All information contained in this document was obtained in specific environments and is presented as an illustration. The result obtained in other operating environments may vary. Lenovo may use or distribute any of the information you supply in any way it believes appropriate without incurring any obligation to you.

Any references in this publication to non-Lenovo Web sites are provided for convenience only and do not in any manner serve as an endorsement of those Web sites. The materials at those Web sites are not part of the materials for this Lenovo product, and use of those Web sites is at your own risk. Any performance data contained herein was determined in a controlled environment. Therefore, the result obtained in other operating environments may vary significantly. Some measurements may have been made on development-level systems and there is no guarantee that these measurements will be the same on generally available systems. Furthermore, some measurements may have been estimated through extrapolation. Actual results may vary. Users of this document should verify the applicable data for their specific environment.

© Copyright Lenovo 2023. All rights reserved.

This document, LP1393, was created or updated on August 29, 2023.

Send us your comments in one of the following ways:

- Use the online Contact us review form found at:
  https://lenovopress.lenovo.com/LP1393
- Send your comments in an e-mail to:
  comments@lenovopress.com

This document is available online at https://lenovopress.lenovo.com/LP1393.

Trademarks

Lenovo and the Lenovo logo are trademarks or registered trademarks of Lenovo in the United States, other countries, or both. A current list of Lenovo trademarks is available on the Web at https://www.lenovo.com/us/en/legal/copytrade/.

The following terms are trademarks of Lenovo in the United States, other countries, or both:
Lenovo®
AnyBay®
Bootable Media Creator
Flex System
Lenovo Neptune®
Lenovo Services
ServerProven®
System x®
ThinkShield®
ThinkServer®
ThinkSystem®
TruDDR4
UpdateXpress System Packs
XClarity®

The following terms are trademarks of other companies:

Intel®, Intel Optane™, and Xeon® are trademarks of Intel Corporation or its subsidiaries.

Linux® is the trademark of Linus Torvalds in the U.S. and other countries.

ActiveX®, Hyper-V®, Microsoft®, PowerShell, Windows PowerShell®, Windows Server®, and Windows® are trademarks of Microsoft Corporation in the United States, other countries, or both.

SPECpower® is a trademark of the Standard Performance Evaluation Corporation (SPEC).

Other company, product, or service names may be trademarks or service marks of others.