Overview

HPE ProLiant DL385 Gen10 Plus v2 server

The HPE ProLiant DL385 Gen10 Plus v2 Server is redefining price/performance with the new math for virtualized compute. Powered by the latest AMD® EPYC® 7003 Series Processors , the HPE ProLiant DL385 Gen10 Plus v2 Server offers greater processing power, memory speeds up to 3200 MT/s. and data transfer rates with PCIe Gen4 capabilities.

This 2P, 2U server has been designed with flexibility while delivering a high core count and large memory footprint. Choose this purpose-built platform for virtualization, High Performance Compute and memory centric workloads.

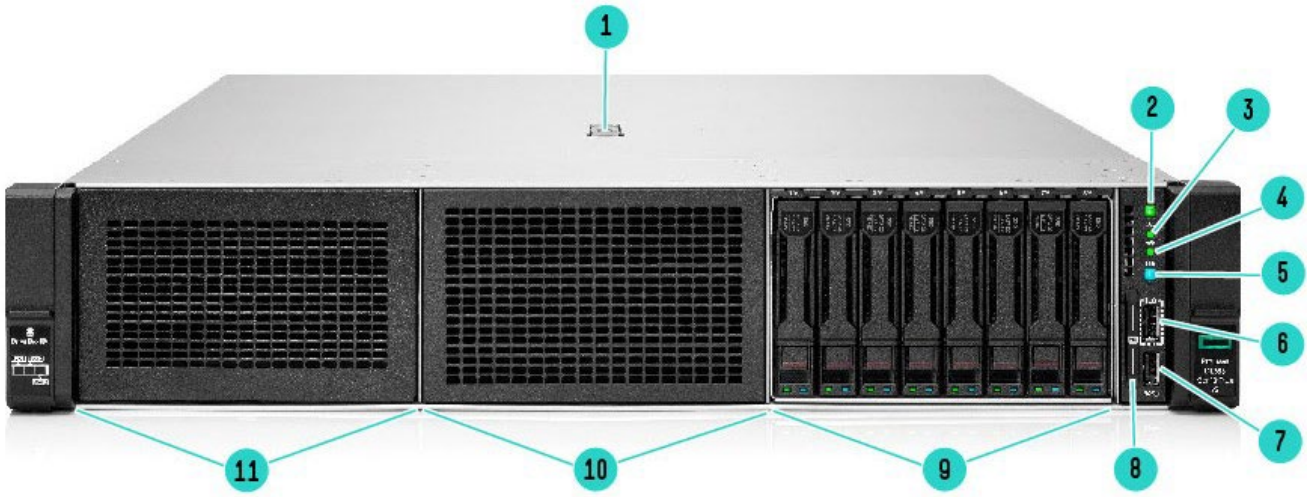

HPE ProLiant DL385 Gen10 Plus v2 8 SFF Server- Front View

1. Quick removal access panel
2. Power On/Standby button and system power LED button
3. Health LED
4. NIC Status
5. Unit ID button
6. iLO front service port
7. USB 3.1 Gen1
8. Serial label pull tag
9. Drive Bay 3. 8 SFF SAS/SATA shown (Box 3)[1]
10. Drive Bay 2. Blank shown (Box 2)[2]
11. Drive Bay 1. Blank shown (Box 1)[3]

Notes:

- [1]8 SFF U.2/U.3 optional
- [2]8 SFF SAS/SATA or 8 SFF U.2/U.3 optional
- [3]8 SFF SAS/SATA or 8 SFF U.2/U.3 or Universal Media Bay optional

Overview

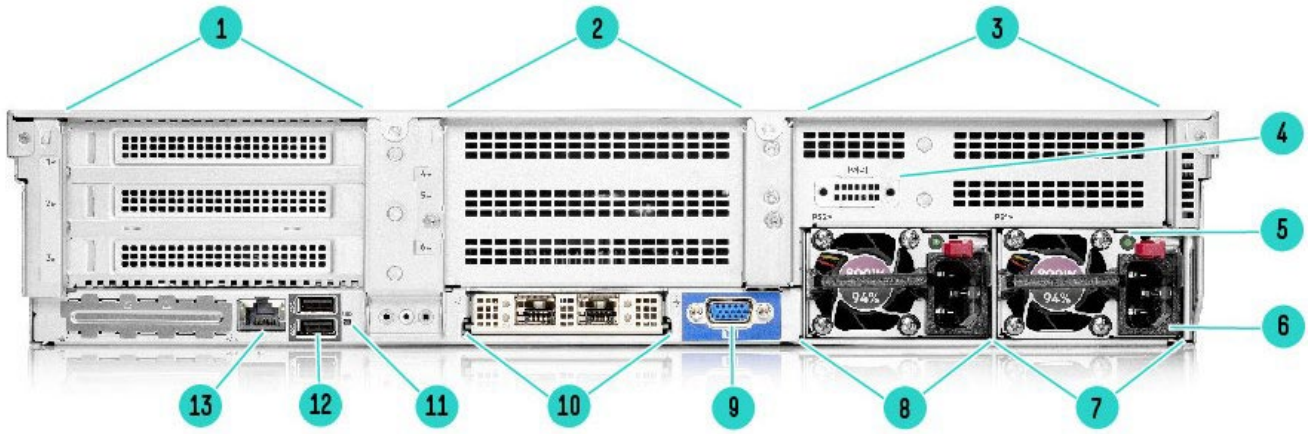

HPE ProLiant DL385 Gen10 Plus v2 Server - Rear View

1. Primary Riser. PCIe Slots[1]
2. Optional Secondary Riser. PCIe Slots[2]
3. Tertiary Riser. PCIe Slots[3]
4. Optional serial port (not shown)
5. Power supply power LED
6. Power supply power connection
7. HPE Flexible Slot Power Supply bay 1
8. HPE Flexible Slot power supply bay 2
9. VGA connector
10. OCP 3.0 Slot
11. Unit ID LED
12. USB connectors 3.1 Gen1 (2)
13. Dedicated iLO management port

Notes:

- [1] Slots 1-3 top to bottom, riser shipped standard, not shown.
- [2] Slots 4-6 top to bottom, not shown, requires second riser card, and second processor. Optional 2 SFF rear drives.
- [3] Slots 7-8 top to bottom, not shown. Optional 2 SFF rear drives.

Overview

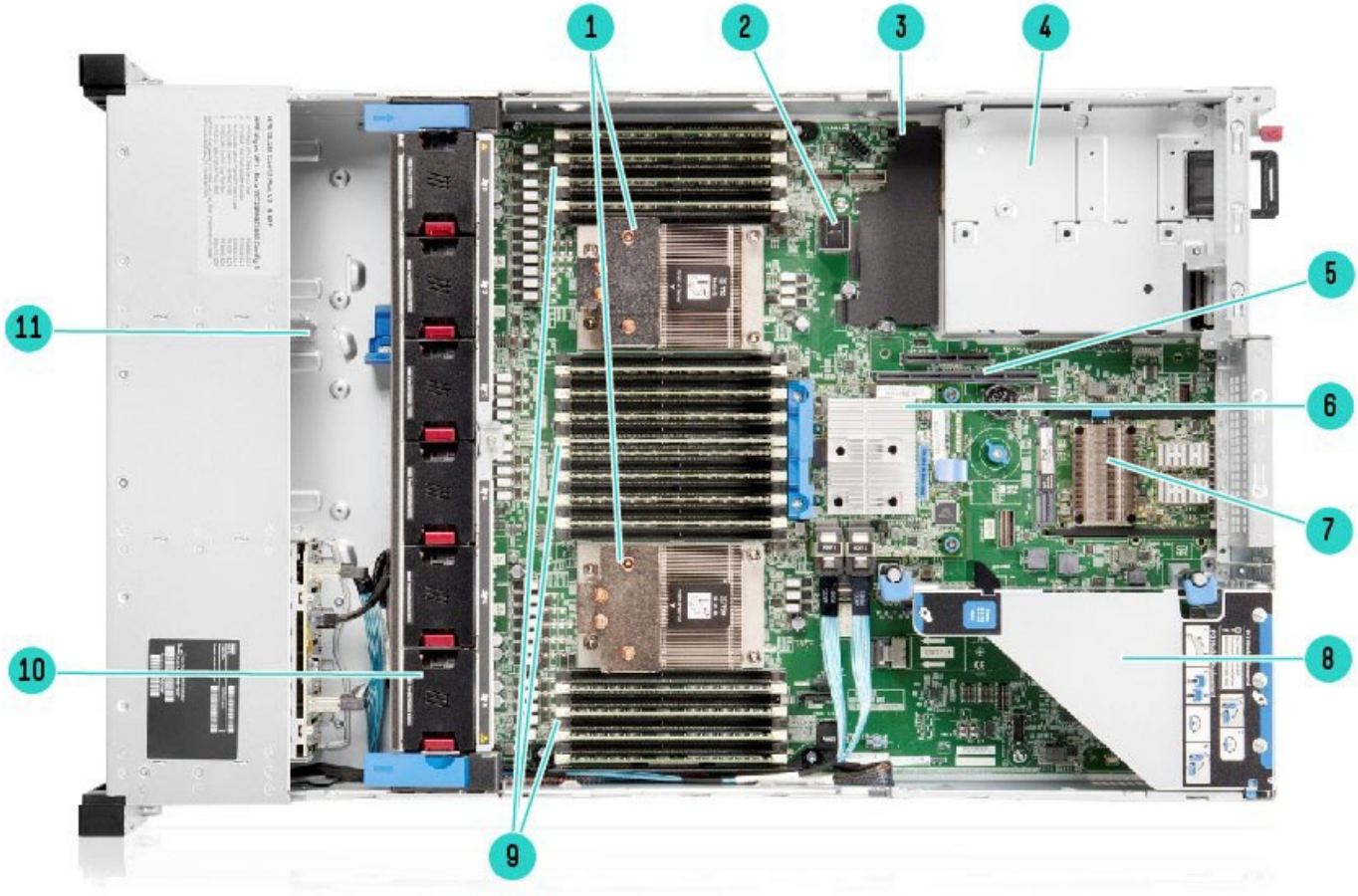

HPE ProLiant DL385 Gen10 Plus v2 Server - Internal View

1. 2 Processors (heat sinks shown)
2. Internal USB 3.1 Gen1 connector
3. Chassis intrusion detection connector
4. Hot Plug redundant HPE Flexible Slot Power supplies
5. Connection for second (optional) riser (requires second CPU)
6. Optional HPE Flexible Smart Array Controller (Type -a shown)
7. OCP 3.0 Slot
8. Primary PCIe riser, standard (optional double wide GPU riser)
9. DDR4 DIMM slots. Shown fully populated in 32 slots (16 per processor)
10. Fan cage shown with 6 standard Hot-plug fans (high performance fans optional)
11. Optional Smart Storage Battery location (Battery not shown)

What's New:

- Supports the latest AMD EPYC 7003 Series processors and additional selected AMD EPYC 7002 Series processors
- Supports a new AMD EPYC 7002 based pre-configured/BTO SKU
- Support for Tri-mode storage controllers for SAS/SATA/NVMe drives
- New Basic Carrier SAS/SATA/NVMe drives
- European Union (EU) Lot 9 regulation, please visit: **https://www.hpe.com/us/en/about/environment/msds-specs-more.html** for more information

Overview

Platform Information

Form Factor

- 2U rack

Chassis Types

- 8 SFF with optional Universal Media Bay, and optional SFF or NVMe drive bay options
- 24 SFF bay with 8 SFF mid tray drives and 4 SFF rear drive bay option to total 36 SFF drives
- 8 LFF with Universal Media Bay, and optional SFF or NVMe drive bay options
- 12 LFF with optional 4 LFF mid tray and optional 4 LFF to total 20 LFF drives

Notes:

- DL385 Gen10 Plus v2 uses Basic Carrier drive cages, not Smart Carrier drive cages as used on DL385 Gen10 Plus.
- The 4 LFF rear drive box will consume space for the primary and secondary riser.
- The 8 and 12 LFF chassis also supports the 2 SFF rear drive box which allows for the user to attach a secondary or tertiary riser.
- The 24 SFF chassis already supports 3x 8 SFF SAS/SATA drive cage kits
- The 8 NVMe U.3 or U.2 cage kits (P27194-B21, P26931-B21, P26932-B21) can only be leveraged in the SFF chassis and replaces Box 1, 2 or 3.
- The Universal Media Bay (P14609-B21) not available with the LFF chassis or the 24 SFF front, and can only be populated in Box 1.
- The 8 NVMe SFF can be upgraded with additional two front 8 NVMe SFF U.3 or U.2 drive boxes (P27194-B21, P26931-B21, P26932-B21) to total 24 SFF NVMe drives, and up to 32 SFF NVMe drives with one mid 8 NVMe SFF mid-tray drive cage (P39600-B21, P38847-B21). U.3 and U.2 front and mid drive cages cannot mix.
- U.3 x1 and x4 drive cages cannot mix.
- The 8 LFF chassis cannot be upgraded to 12 LFF front in the field.
- 12 LFF or more drives require Max performance fan kit (P14608-B21).
- CPU selection is limited 225W (Turbo to 240W) or lower with 4LFF mid-tray selected & DIMM blanks populate empty DIMM slots.

System Fans

Standard – fan types included

- The 8 SFF chassis ship with 4 standard fans as standard.
- The 8 LFF chassis ships with 6 standard fans as standard.
- The 12 LFF and 24 SFF chassis ship with 6 max performance fans as standard.
- Max performance fan kit is available to meet ambient temperature environments.
- Max performance fan kits are required for rear drives, or >155w Processors SKUs, or if High Performance NVMe/SAS4 drives being used.

Standard Features

Processors Up to 2 of the following depending on model.

Notes: For more information regarding AMD EPYC processors, please see the following:
https://www.amd.com/en/products/epyc

AMD EPYC Processor	Cores	Base Frequency	Max Frequency	Max Memory	Wattage	Cache	Memory
EPYC 7763	64	2.45 GHz	3.5 GHz	4TB	280W	256MB	3200MT/s
EPYC 7713	64	2.0 GHz	3.675 GHz	4TB	225W	256MB	3200MT/s
EPYC 7663	56	2.0 GHz	3.5 GHz	4TB	240W	256MB	3200MT/s
EPYC 7643	48	2.3 GHz	3.6 GHz	4TB	225W	256MB	3200MT/s
EPYC 7543	32	2.8 GHz	3.7 GHz	4TB	225W	256MB	3200MT/s
EPYC 7513	32	2.6 GHz	3.65 GHz	4TB	200W	128MB	3200MT/s
EPYC 7453	28	2.75 GHz	3.45 GHz	4TB	225W	64MB	3200MT/s
EPYC 7443	24	2.85 GHz	4.0 GHz	4TB	200W	128MB	3200MT/s
EPYC 7413	24	2.65 GHz	3.6 GHz	4TB	180W	128MB	3200MT/s
EPYC 7343	16	3.2 GHz	3.9 GHz	4TB	190W	128MB	3200MT/s
EPYC 7313	16	3.0 GHz	3.7 GHz	4TB	155W	128MB	3200MT/s
EPYC 75F3	32	2.95 GHz	4.0 GHz	4TB	280W	256MB	3200MT/s
EPYC 74F3	24	3.2 GHz	4.0 GHz	4TB	240W	256MB	3200MT/s
EPYC 73F3	16	3.5 GHz	4.0 GHz	4TB	240W	256MB	3200MT/s
EPYC 72F3	8	3.7 GHz	4.1 GHz	4TB	180W	256MB	3200MT/s
EPYC 7773X	64	2.2 GHz	3.5 GHz	4TB	280W	768MB	3200MT/S
EPYC 7573X	32	2.8 GHz	3.6 GHz	4TB	280W	768MB	3200MT/S
EPYC 7473X	24	2.8 GHz	3.7 GHz	4TB	240W	768MB	3200MT/S
EPYC 7373X	16	3.05 GHz	3.8 GHz	4TB	240W	768MB	3200MT/S
EPYC 7402	24	2.8 GHz	3.35 GHz	4TB	180W	128MB	3200MT/S
EPYC 7302	16	3.0 GHz	3.3 GHz	4TB	155W	128MB	3200MT/S
EPYC 7252	8	3.1 GHz	3.2 GHz	4TB	120W	64MB	3200MT/S

Notes: All AMD EPYC processors can support up to 4TB of memory each

Chipset

No chipset – System on Chip (SoC) design.

On System Management Chipset

HPE iLO 5 ASIC

Read and learn more in the **iLO QuickSpecs**.

Memory

One of the following depending on model

Type	HPE DDR4 Smart Memory, Registered (RDIMM)
DIMM Slots Available	32 16 DIMM slots per processor, 8 channels per processor, 2 DIMMs per channel
Maximum capacity (LRDIMM)	8.0TB 32 x 256 GB LRDIMM @ 3200 MT/s at 1 DPC, 2933 MT/s at 2 DPC

Notes:

- The maximum memory speed is limited by the processor selection.
- 3200 MT/s memory SKUs can run the transfer rate of 3200 MT/s at both 1 DIMM and 2 DIMM per channel, except 256 GB LRDIMM

Standard Features

Memory Protection

Advanced ECC

Advanced ECC uses single device data correction to detect and correct single and all multibit error that occurs within a single DRAM chip.

Expansion Slots

Primary Riser

Notes:

- Bus width indicates the number of physical electrical lanes running to the connector.
- There are 3 types of risers supported on Primary Slot
- When supporting Slot1 & Slot2 in below Primary Riser3 scenario, Slot1 & Slot2 combined can support up to 38GB/s bandwidth, due to an AMD CPU limitation.

Primary Riser1					
Slots #	**Technology**	**Bus Width**	**Connector Width**	**Slot Form Factor**	**Notes**
1	PCIe 4.0	X8	X16	Full-height,full-length slot	Proc 1
2	PCIe 4.0	X16	X16	Full-height,full-length slot	Proc 1
3	PCIe 4.0	X8	X16	Full-height,half-length slot	Proc 1

Primary Riser2					
Slots #	**Technology**	**Bus Width**	**Connector Width**	**Slot Form Factor**	**Notes**
1	PCIe 4.0	X16	X16	Full-height,full-length slot	Proc 1
2	PCIe 4.0	X16	X16	Full-height,full-length slot	Proc 1
3	NA	NA	NA	NA	NA

Primary Riser3 (requires P14600-B21 + P14599-B21)					
Slots #	**Technology**	**Bus Width**	**Connector Width**	**Slot Form Factor**	**Notes**
1**	NA	NA	NA	NA	NA
1	PCIe 4.0	X16	X16	Full-height,full-length slot	Proc 1
2	PCIe 4.0	X16	X16	Full-height,full-length slot	Proc 1
3	PCIe 4.0	X16	X16	Full-height,half-length slot	Proc 1

Notes: ** Default Slot1 on the Primary Riser3 is empty and not available. It requires P14600-B21 in conjunction with the Primary Riser3 to add additional x16 PCIe Gen4 in slot1.

Secondary Riser:

Notes:

- Bus Width Indicates the number of physical electrical lanes running to the connector.
- There are 3 types of risers support on Secondary Slot

Secondary Riser1					
Slots #	**Technology**	**Bus Width**	**Connector Width**	**Slot Form Factor**	**Notes**
4	PCIe 4.0	X8	X16	Full-height,full-length slot	Proc 2
5	PCIe 4.0	X16	X16	Full-height,full-length slot	Proc 2
6	PCIe 4.0	X8	X16	Full-height,half-length slot	Proc 2

Secondary Riser2					
Slots #	**Technology**	**Bus Width**	**Connector Width**	**Slot Form Factor**	**Notes**
4	PCIe 4.0	X16	X16	Full-height,full-length slot	Proc 2
5	PCIe 4.0	X16	X16	Full-height,full-length slot	Proc 2
6	NA	NA	NA	NA	NA

Standard Features

Secondary Riser3 (Requires P14600-B21 + P14590-B21)					
Slots #	**Technology**	**Bus Width**	**Connector Width**	**Slot Form Factor**	**Notes**
4*	NA	NA	NA	NA	NA
4	PCIe 4.0	X16	X16	Full-height,full-length slot	Proc 2
5	PCIe 4.0	X16	X16	Full-height,full-length slot	Proc 2
6	PCIe 4.0	X16	X16	Full-height,half-length slot	Proc 2

Notes: * Default Slot4 on the Secondary Riser3 is empty and not available.It requires P14600-B21 in conjunction with the Secondary Riser3 to add additional x16 PCIe Gen4 in slot4

Tertiary Riser:

Notes:

- Bus Width Indicates the number of physical electrical lanes running to the connector.
- There are 2 types of risers support on Tertiary Slot

Tertiary Riser1					
Slots #	**Technology**	**Bus Width**	**Connector Width**	**Slot Form Factor**	**Notes**
7	PCIe 4.0	X16	X16	Full-height,full-length slot	Proc 2
8	NA	NA	NA	NA	NA

Tertiary Riser2					
Slots #	**Technology**	**Bus Width**	**Connector Width**	**Slot Form Factor**	**Notes**
7	PCIe 4.0	X8	X16	Full-height,full-length slot	Proc 2
8	PCIe 4.0	X8	X16	Full-height,full-length slot	Proc 2

Storage Controllers

The Gen10/Gen10 Plus controller naming framework has been updated to simplify identification as depicted below. For a more detailed breakout of the available Gen10/Gen10 Plus Smart Array controllers visit the **HPE Smart Array Gen10 Controllers Data Sheet**.

HPE also launched Tri-Mode controllers which will support NVMe U.3/U.2 drives as wells as SAS/SATA drives. Please see below list for the tri-mode controllers supported on the server.

One of the following depending on model

NVMe Boot Device

- HPE NS204i-p NVMe PCIe3 OS Boot Device

Notes:

- NS204i-p will only be supported in Slot 1 of the primary riser.
- NS204i-p and Primary Riser HPE DL38X Gen10+ 2x16 Slot 2/3 FIO Kit (P14599-B21) are selected then HPE DL38X Gen10+ Slot1 x16 Slot2/3 Kit (P14600-B21) also must be in the configuration.
- Legacy Mode setting (758959-B21) and NS204i-p cannot be selected together.
- HPE Universal SATA AIC HHHL M.2 SSD Kit (878783-B21) and NS204i-p cannot be selected together.
- When NS204i-p and doublewide GPU are selected together Secondary Riser MUST be selected and doublewide GPU can be maximum of 2.

Software RAID – HPE Smart Storage SR100i SR Gen10 Plus SW RAID

- All models feature an embedded storage controller, capable of operating on AHCI or SR100i modes, with embedded software supporting RAID for up to 2 U.3 NVMe SSDs.
- HPE Smart Storage SR100i SR Gen10 Plus SW RAID will operate in UEFI mode only. Legacy Mode (758959-B22) and SR100i Gen10 Plus SW RAID CAN NOT be selected together. For legacy support, an additional controller will be needed.
- SR100i cannot be selected with 878783-B21 Universal SATA HH M.2 Kit or P12965-B21 HPE NS204i-p Gen10+ NVMe Boot Device.
- SR100i can only be selected with 8SFF CTO and 8LFF CTO servers.
- SR100i cannot be selected with P4610, P4510 or P4800x SSD drives.

Standard Features

- SR100i cannot be selected with P26932-B21 HPE DL300 Gen10+ 2U 8SFF x4 NVMe U.2 Kit
- Embedded SATA controller by default will work in AHCI Mode. HPE Smart Storage SR100i SR Gen10 Plus SW RAID can be enabled by selecting HPE SR100i Gen10 Plus Software RAID (P28417-B21).
- Supports Microsoft Windows Server only.

Essential RAID Controller

- HPE Smart Array E208i-a SR Gen10 Controller
- HPE Smart Array E208i-p SR Gen10 Controller
- HPE Smart Array E208e-p SR Gen10 Controller

Performance RAID Controller

- HPE Smart Array P408i-a SR Gen10 Controller
- HPE Smart Array P408i-p SR Gen10 Controller
- HPE Smart Array P408e-p SR Gen10 Controller
- HPE Smart Array P816i-a SR Gen10 Controller

Notes: Performance RAID Controllers require the HPE Smart Storage Battery (P01366-B21) which is sold separately.

Tri-Mode RAID Controller

- HPE Tri-Mode MR216i-a Gen10 Plus Controller
- HPE Tri-Mode MR216i-p Gen10 Plus Controller
- HPE Tri-Mode MR416i-a Gen10 Plus Controller
- HPE Tri-Mode MR416i-p Gen10 Plus Controller
- HPE Tri-Mode SR416i-a Gen10 Plus Controller
- HPE Tri-Mode SR932i-p Gen10 Plus Controller

Internal Storage Devices

One of the following depending on model

Optical Drive

- Ships standard in Performance Models
- Optional: DVD-ROM, DVD-RW

Hard Drives

- None ship standard

Graphics

Integrated Video Standard

- Video modes up to 1920 x 1200@60Hz (32 bpp)
- 16MB Video Memory

HPE iLO 5 on system management memory

- 32 MB Flash
- 4 Gbit DDR 3 with ECC protection

Standard Features

Maximum Internal Storage

Drive	Capacity	Configuration
Hot Plug SFF SAS	67.2TB	24+4 x 2.4 TB* (with optional rear SFF drive cage)
Hot Plug SFF SATA	56.0 TB	24+4 x 2 TB (with optional rear SFF drive cage)
Hot Plug LFF SAS	390.6 TB	12+4+4 x 18 TB + 2 x 15.3 TB (with optional mid –tray and rear LFF drive cage, plus 2 SFF SSD rear)
Hot Plug LFF SATA	390.6 TB	12+4+4 x 18 TB + 2 x 15.3 TB (with optional mid –tray and rear LFF drive cage, plus 2 SFF SSD rear)
Hot Plug SFF SAS SSD	428.4 TB	24+4 x 15.3 TB (with optional rear SFF drive cage)
Hot Plug LFF SATA SSD	49.8 TB	12+4+4 x 0.96 TB + 2 x 15.3 TB (with optional mid –tray and rear LFF drive cage, plus 2 SFF SSD rear)
Hot Plug SFF SATA SSD	215 TB	24+4 x 7.68 TB (with optional 2SFF drive cage)
Hot Plug SFF NVMe PCIe SSD	491.52TB NVMe	24+8 x 15.36TB NVMe

Power Supply

- HPE 500W Flex Slot Platinum Hot Plug Low Halogen Power Supply Kit
  Notes: Available in 94% Power Efficiency.
- HPE 800W Flex Slot Platinum Hot Plug Low Halogen Power Supply Kit
  Notes: Available in 94%. Power Efficiency
- HPE 800W Flex Slot Titanium Hot Plug Low Halogen Power Supply Kit
  Notes:
  - Available in 96% Power Efficiency
  - 200-240VAC power input only.
- HPE 800W Flex Slot Universal Hot Plug Low Halogen Power Supply Kit
  Notes:
  - Available in 94% Power Efficiency
  - 277VAC power input.
- HPE 800W Flex Slot 48VDC Hot Plug Low Halogen Power Supply Kit
  Notes:
  - Available in 94% Power Efficiency
  - -48VDC power input.
- HPE 1600W Flex Slot Platinum Hot Plug Low Halogen Power Supply Kit
  Notes:
  - Available in 94% Power Efficiency.
  - 200-240VAC power input only.
- HPE 1600W ~48VDC Power Supply Kit

HPE Flexible Slot (Flex Slot) Power Supplies share a common electrical and physical design that allows for hot plug, tool-less installation into HPE ProLiant Gen10 Plus Performance Servers. Flex Slot power supplies are certified for high-efficiency operation and offer multiple power output options, allowing users to "right-size" a power supply for specific server configurations. This flexibility helps to reduce power waste, lower overall energy costs, and avoid "trapped" power capacity in the data center.
All pre-configured servers ship with a standard 6-foot IEC C-13/C-14 jumper cord (A0K02A). This jumper cord is also included with each standard AC power supply option kit. If a different power cord is required, please check the **ProLiant Power Cables** web page.

To review the power requirements for your selected system, please use the **HPE Power Advisor Tool**.

For information on power specifications and technical content visit **HPE Server power supplies**.

Standard Features

Interfaces

Serial	Optional, rear
Display Port	1 optional on both Universal Media Bay and LFF power switch module
VGA Port	1 VGA Port standard at rear
Network Ports	None. Choice of OCP or stand up card
HPE iLO Remote Management Network Port	1 Gb Dedicated
Front iLO Service Port	1 standard (Not available on 12 LFF chassis or when SID is ordered, note iLO dongle required, 880123-B21)
USB 3.1 Gen1	Up to 7 total: 1 front, 2 rear, 2 internal (secure), 2 optional USB 3.0 front via Universal Media Bay, or standard on 8 LFF chassis
SID (Systems Insight Display)	Optional

Notes: Not shipping as standard. Available as a CTO option or as a field upgrade (P14611-B21).

UEFI

Configure and boot your servers securely with industry standard Unified Extensible Firmware Interface (UEFI).

Learn more at **http://www.hpe.com/servers/uefi**.

Operating Systems and Virtualization Software Support for ProLiant Servers

- Windows Server 2016
- Windows Server 2019 (Most Recent Version)
- Windows Server 2022
- VMware ESXi 6.7 U3
- VMware ESXi 7.0 U1/U2
- **SUSE Linux Enterprise Server (SLES)** 12 SP5
- **SUSE Linux Enterprise Server (SLES)** 15 SP2
- **Red Hat Enterprise Linux (RHEL)** 8.3
- Citrix Hypervisor 8.2
- Ubuntu 20.04 LTS

Notes: For more information on Hewlett Packard Enterprise Certified and Supported ProLiant Servers for OS and Virtualization Software and latest listing of software drivers available for your server.
https://www.hpe.com/us/en/servers/server-operating-systems.html

HPE Server UEFI/Legacy ROM

Unified Extensible Firmware Interface (UEFI) is an industry standard that provides better manageability and more secured configuration than the legacy ROM while interacting with your server at boot time. HPE ProLiant Gen10 Plus servers have a UEFI Class 2 implementation and support both UEFI Mode (default) and Legacy BIOS Mode.
Notes: The UEFI System Utilities tool is analogous to the HPE ROM-Based Setup Utility (RBSU) of legacy BIOS. For more information, please visit **http://www.hpe.com/servers/uefi**.

UEFI enables numerous new capabilities specific to HPE ProLiant servers such as

- Secure Boot and Secure Start enable for enhanced security
- Operating system specific functionality
- Support for > 2.2 TB (using GPT) boot drives
- USB 3.0 Stack

Standard Features

HPE Server UEFI/Legacy ROM

- Embedded UEFI Shell
- Mass Configuration Deployment Tool using iLO RESTful API that is Redfish API Conformant
- PXE boot support for IPv6 networks
- Workload Profiles for simple performance optimization

UEFI Boot Mode only

- TPM 2.0 Support
- NVMe Boot Support
- iSCSI Software Initiator Support.
- HTTP/HTTPs Boot support as a PXE alternative.
- Boot support for option cards that only support a UEFI option ROM

Notes: For UEFI Boot Mode, boot environment and OS image installations should be configured properly to support UEFI.

Industry Standard Compliance

- ACPI 6.1 Compliant
- PCIe 4.0 Compliant
- WOL Support
- Microsoft® Logo certifications
- PXE Support
- VGA/Display Port
  Notes: This support is on the optional Universal Media Bay.
- USB 3.1 Gen1 Compliant (internal)
- USB 2.0 Compliant (external ports)
  Notes: This support is on the optional Universal Media Bay.
- Energy Star
- SMBIOS 3.1
- UEFI 2.6
- Redfish API
- IPMI 2.0
- Secure Digital 2.0
- Advanced Encryption Standard (AES)
- Triple Data Encrytion Standard (3DES)
- SNMP v3
- TLS 1.2
- DMTF Systems Management Architecture for Server Hardware Command Line Protocol (SMASH CLP)
- Active Directory v1.0

Standard Features

- European Union (EU) eco-design regulations for server and storage products, known as Lot 9, go into effect on March 1st, 2020. Among other requirements, for servers this directive establishes power thresholds for idle state, as well as efficiency and performance in active state which vary among configurations.
  Beginning on January 1st, 2024, units sold into the EU, European Economic Area (EEA), the United Kingdom, or Switzerland must include more efficient AC power supplies: 94% for multi-output and 96% for single-output. HPE Flexible Slot power supplies are single-output, and part numbers 865438-B21, P03178-B21, and P44712-B21 are 96% efficient, thus meeting requirements. HPE is on target to fulfil compliant systems ahead of time and will begin enforcing these requirements in advance to satisfy requests with the current power supplies by the set deadline.
  HPE ProLiant Gen10 servers are compliant with Lot9 requirements. For more information regarding HPE Lot 9 conformance, please visit: **https://www.hpe.com/us/en/about/environment/msds-specs-more.html**
- ASHRAE A3/A4
  Notes: For additional technical thermal details regarding ambient temperatures, humidity and features support please visit: **http://www.hpe.com/servers/ashrae**.
- UEFI (Unified Extensible Firmware Interface Forum)

Embedded Management

HPE Integrated Lights-Out (HPE iLO)

Monitor your servers for ongoing management, service alerting, reporting and remote management with HPE iLO.
Learn more at **http://www.hpe.com/info/ilo**.

Intelligent Provisioning

Hassle free server and OS provisioning for 1 or more servers with Intelligent Provisioning.
Learn more at **http://www.hpe.com/servers/intelligentprovisioning**.

iLO RESTful API

iLO RESTful API is Redfish API conformance and offers simplified server management automation such as configuration and maintenance tasks based on modern industry standards. Learn more at **http://www.hpe.com/info/restfulapi**.

Server Utilities

Active Health System

The HPE Active Health System (AHS) is an essential component of the iLO management portfolio that provides continuous, proactive health monitoring of HPE servers. Learn more at **http://www.hpe.com/servers/ahs**.

Active Health System Viewer

Use the Active Health System Viewer, a web-based portal, to easily read AHS logs and speed problem resolution with HPE self-repair recommendations, to learn more visit: **http://www.hpe.com/servers/ahsv**.

Smart Update

Keep your servers up to date with the HPE Smart Update solution by using Smart Update Manager (SUM) to optimize the firmware and driver updates of the Service Pack for ProLiant (SPP).
Learn more at **https://www.hpe.com/us/en/servers/smart-update.html** .

iLO Amplifier Pack

Designed for large enterprise and service provider environments with hundreds of HPE servers, the iLO Amplifier Pack is a free, downloadable open virtual application (OVA) that delivers the power to discover, inventory and update Gen8, Gen9 , Gen10 & Gen10 Plus HPE servers at unmatched speed and scale. Use with an iLO Advanced License to unlock full capabilities.
Learn more at **http://www.hpe.com/servers/iLOamplifierpack**.

Standard Features

HPE iLO Mobile Application
Enables the ability to access, deploy, and manage your server anytime from anywhere from select smartphones and mobile devices. For additional information please visit: **http://www.hpe.com/info/ilo/mobileapp**.

RESTful Interface Tool
RESTful Interface tool (iLOREST) is a single scripting tool to provision using iLO RESTful API to discover and deploy servers at scale. Learn more at **http://www.hpe.com/info/resttool**.

Scripting Tools
Provision one to many servers using your own scripts to discover and deploy with Scripting Tool (STK) for Windows and Linux or Scripting Tools for Windows PowerShell. Learn more at **http://www.hpe.com/servers/powershell**.

HPE OneView Standard
HPE OneView Standard can be used for inventory, health monitoring, alerting, and reporting without additional fees. It can monitor multiple HPE server generations. The user interface is similar to the HPE OneView Advanced version, but the software-defined functionality is not available. Learn more at **http://www.hpe.com/info/oneview**.

HPE Systems Insight Manager (HPE SIM)
Ideal for environments already using HPE SIM, it allows you to monitor the health of your HPE ProLiant Servers and HPE Integrity Servers. Also provides you with basic support for non-HPE servers. HPE SIM also integrates with Smart Update Manager to provide quick and seamless firmware updates. Learn more at **http://www.hpe.com/info/hpesim**.

Warranty
This product is covered by a global limited warranty and supported by HPE Services and a worldwide network of Hewlett Packard Enterprise Authorized Channel Partners resellers. Hardware diagnostic support and repair is available for three years from date of purchase. Support for software and initial setup is available for 90 days from date of purchase. Enhancements to warranty services are available through HPE Pointnext operational services or customized service agreements. Hard drives have either a one year or three year warranty; refer to the specific hard drive QuickSpecs for details.

Notes: Server Warranty includes 3-Year Parts, 3-Year Labor, 3-Year Onsite support with next business day response. Warranty repairs may be accomplished through the use of Customer Self Repair (CSR) parts. These parts fall into two categories: 1) Mandatory CSR parts are designed for easy replacement. A travel and labor charge will result when customers decline to replace a Mandatory CSR part; 2) Optional CSR parts are also designed for easy replacement but may involve added complexity. Customers may choose to have Hewlett Packard Enterprise replace Optional CSR parts at no charge. Additional information regarding worldwide limited warranty and technical support is available at:
https://www.hpe.com/us/en/search-results.html?page=1&q=servers%20warranty&autocomplete=0

Security
- UEFI Secure Boot and Secure Start support
- Immutable Silicon Root of Trust
- FIPS 140-2 validation (iLO 5 certification in progress)
- Common Criteria certification (iLO 5 certification in progress)
- Configurable for PCI DSS compliance
- Advanced Encryption Standard (AES) and Triple Data Encryption Standard (3DES) on browser
- Support for Commercial National Security Algorithms (CNSA)
- Tamper-free updates – components digitally signed and verified
- Secure Recovery – recover critical firmware to known good state on detection of compromised firmware
- Ability to rollback firmware
- Secure erase of NAND/User data
- TPM (Trusted Platform Module) 2.0 option
- Bezel Locking Kit option
- Chassis Intrusion detection option

Optional Features

Server Management

HPE iLO Advanced

HPE iLO Advanced licenses offer smart remote functionality without compromise, for all HPE ProLiant servers. The license includes the full integrated remote console, virtual keyboard, video, and mouse (KVM), multi-user collaboration, console record and replay, and GUI-based and scripted virtual media and virtual folders. You can also activate the enhanced security and power management functionality.

HPE iLO Advanced Premium Security Edition

HPE iLO Advanced Premium Security Edition for iLO 5 includes iLO Advanced License plus high-end security modes, unique security capabilities, like Automatic FW recovery; Runtime FW verification, and Secure erase. Learn more about HPE iLO Advanced Premium Security Edition at: **http://www.hpe.com/servers/ilopremium**.

HPE GreenLake for Compute Ops Management

HPE is intelligently transforming compute management with an intuitive cloud operating experience through HPE GreenLake cloud platform to streamline and secure operations from edge-to-cloud. Automated key lifecycle tasks, for onboarding, updating, managing, and monitoring HPE servers, brings agility and greater efficiencies to wherever compute devices reside via a unified single browser-based interface. Manage single locations or multiple, distributed sites. Keep tens to thousands of servers secure with batch policy controls and automated updates.

Compute Ops Management is cloud-native software that is continually updated with new services, features, patches, and fixes. The management application resides in the HPE GreenLake cloud platform (access via **https://console.greenlake.hpe.com)** and leverages the HPE GreenLake architecture, security, and unified operations.

For a complete list of software as-a-service subscription SKUs and more information, visit the HPE GreenLake for Compute Ops Management QuickSpecs: **https://www.hpe.com/psnow/doc/a50004263enw**

For information on supported HPE servers, the complete list can be found here:
https://www.hpe.com/info/com-supported-servers

HPE OneView Advanced

HPE OneView brings a new level of automation to infrastructure management by taking a template driven approach to provisioning, updating, and integrating compute, storage, and networking infrastructure. It provides full-featured licenses which can be purchased for managing Gen8, Gen9 , Gen10 & Gen10 Plus servers. To learn more visit **http://www.hpe.com/info/oneview**.

HPE InfoSight for Servers

HPE InfoSight for Servers combines the cloud-based machine learning of InfoSight with the health and performance monitoring of Active Health System (AHS) and iLO to optimize performance and predict and prevent problems. The end result is an intelligent environment that modernizes IT operations and enhances the support experience by predicting and preventing the infrastructure issues that lead to application disruptions, wasted IT staff time and missed business opportunities.
Learn more at **https://www.hpe.com/servers/infosight**

Optional Features

Rack and Power Infrastructure

The story may end with servers, but it starts with the foundation that makes compute go – and business grow. We've reinvented our entire portfolio of rack and power products to make IT infrastructure more secure, more practical, and more efficient. In other words, we have created a stronger, smarter, and simpler infrastructure to help you get the most out of your IT equipment. As an industry leader, Hewlett Packard Enterprise is uniquely positioned to address the key concerns of power, cooling, cable management and system access.

HPE G2 Advanced and Enterprise Racks are perfect for the server room or today's modern data center with enhanced airflow and thermal management, flexible cable management, and a 10 year Warranty to support higher density computing.
HPE G2 PDUs offer reliable power in flexible form factors that operate at temperatures up to 60°C, include color-coded outlets and load segments and a low-profile design for optimal access to the rack and support for dense rack environments.

HPE Uninterruptible Power Systems are cost-effective power protection for any type workload. Some UPSs include options for remote management and extended runtime modules so you're critical dense data center is covered in power outages.

HPE KVM Solutions include a console and switches designed to work with your server and IT equipment reliably. We've got a cost-effective KVM switch for your first rack and multiple connection IP switches with remote management and security capabilities to keep your data center rack up and running.

Learn more about HPE Racks, KVM, PDUs and UPSs at **HPE Rack and Power Infrastructure**.

One Config Simple (SCE)

SCE is a guided self-service tool to help sales and non-technical people provide customers with initial configurations in 3 to 5 minutes. You may then send the configuration on for configuration help, or use in your existing ordering processes. If you require "custom" rack configuration or configuration for products not available in SCE, please contact Hewlett Packard Enterprise Customer Business Center or an Authorized Partner for assistance. **https://h22174.www2.hpe.com/SimplifiedConfig/Welcome#**

Service and Support

HPE Pointnext - Service and Support

Get the most from your HPE Products. Get the expertise you need at every step of your IT journey with **HPE Pointnext Services**. We help you lower your risks and overall costs using automation and methodologies that have been tested and refined by HPE experts through thousands of deployments globally. HPE Pointnext **Advisory Services**, focus on your business outcomes and goals, partnering with you to design your transformation and build a roadmap tuned to your unique challenges. Our **Professional** and **Operational Services** can be leveraged to speed up time-to-production, boost performance and accelerate your business. HPE Pointnext specializes in flawless and on-time implementation, on-budget execution, and creative configurations that get the most out of software and hardware alike.

Consume IT on your terms

HPE GreenLake brings the cloud experience directly to your apps and data wherever they are—the edge, colocations, or your data center. It delivers cloud services for on-premises IT infrastructure specifically tailored to your most demanding workloads. With a pay-per-use, scalable, point-and-click self-service experience that is managed for you, HPE GreenLake accelerates digital transformation in a distributed, edge-to-cloud world.

- Get faster time to market
- Save on TCO, align costs to business
- Scale quickly, meet unpredictable demand
- Simplify IT operations across your data centers and clouds

Managed services to run your IT operations

HPE GreenLake Management Services provides services that monitor, operate, and optimize your infrastructure and applications, delivered consistently and globally to give you unified control and let you focus on innovation.

Recommended Services

HPE Pointnext Tech Care.

HPE Pointnext Tech Care is the new operational service experience for HPE products. Tech Care goes beyond traditional support by providing access to product specific experts, an AI driven digital experience, and general technical guidance to not only reduce risk but constantly search for ways to do things better. HPE Pointnext Tech Care has been reimagined from the ground up to support a customer-centric, AI driven, and digitally enabled customer experience to move your business forward. HPE Pointnext Tech Care is available in three response levels. Basic, which provides 9x5 business hour availability and a 2 hour response time. Essential which provides a 15 minute response time 24x7 for most enterprise level customers, and Critical which includes a 6 hour repair commitment where available and outage management response for severity 1 incidents.
https://www.hpe.com/services/techcare

HPE Pointnext Complete Care

HPE Pointnext Complete Care is a modular, edge-to-cloud IT environment service that provides a holistic approach to optimizing your entire IT environment and achieving agreed upon IT outcomes and business goals through a personalized and customer-centric experience. All delivered by an assigned team of HPE Pointnext Services experts. HPE Pointnext Complete Care provides:

- A complete coverage approach -- edge to cloud
- An assigned HPE team
- Modular and fully personalized engagement
- Enhanced Incident Management experience with priority access
- Digitally enabled and AI driven customer experience

https://www.hpe.com/services/completecare

Service and Support

Other related Services

HPE Server Hardware Installation

Provides for the basic hardware installation of HPE branded servers, storage devices and networking options to assist you in bringing your new hardware into operation in a timely and professional manner.
https://h20195.www2.hpe.com/v2/Getdocument.aspx?docname=5981-9356enw

HPE Installation and Startup Service

Provides for the installation of your HPE hardware according to product specifications including options. The HPE service delivery technician will connect the product to a LAN as appropriate and enable remote support to allow for automatic case creation for hardware failures. Installation and start up services also includes the installation of one supported operating system type (Windows® or Linux).

DC for Hyperscale

Complete Care for Hyperscale is available for Service Providers and HPC customers who use a scale out approach to computing with a high volume homogenous infrastructure and resilient architecture can take advantage of this environment support tailored to their operating model.

HPE Factory Express for Servers and storage

HPE Factory Express offers configuration, customization, integration and deployment services for HPE servers and storage products. Customers can choose how their factory solutions are built, tested, integrated, shipped and deployed.
Factory Express offers service packages for simple configuration, racking, installation, complex configuration and design services as well as individual factory services, such as image loading, asset tagging, and custom packaging. HPE products supported through Factory Express include a wide array of servers and storage: HPE Integrity, HPE ProLiant, HPE Apollo, HPE ProLiant Server Blades, HPE BladeSystem, HPE 9000 servers as well as the MSAxxxx3PAR suite, XP, rackable tape libraries and configurable network switches.

HPE Service Credits

HPE Service Credits offers flexible services and technical skills to meet your changing IT demands. With a menu of service that is tailored to suit your needs, you get additional resources and specialist skills to help you maintain peak performance of your IT. Offered as annual credits, you can plan your budgets while proactively responding to your dynamic business.

HPE Education Services

Keep your IT staff trained making sure they have the right skills to deliver on your business outcomes. Book on a class today and learn how to get the most from your technology investment. **http://www.hpe.com/ww/learn**

Service and Support

HPE Support Center

The HPE Support Center is a personalized online support portal with access to information, tools and experts to support HPE business products. Submit support cases online, chat with HPE experts, access support resources or collaborate with peers.
Learn more **http://www.hpe.com/support/hpesc**.

The HPE Support Center Mobile App* allows you to resolve issues yourself or quickly connect to an agent for live support. Now, you can get access to personalized IT support anywhere, anytime.
HPE Insight Remote Support and HPE Support Center are available at no additional cost with a HPE warranty, HPE Support Service or HPE contractual support agreement.
Notes: *HPE Support Center Mobile App is subject to local availability.

For more information: **http://www.hpe.com/services**.
Notes: HPE ProLiant DL385 Gen10 Plus Server is covered under the HPE Service Contract applied to the HPE ProLiant Server. No separate HPE support services need to be purchased.

Warranty and Support Services will extend to include HPE options configured with your server or storage device. The price of support service is not impacted by configuration details. HPE sourced options that are compatible with your product will be covered under your server support at the same level of coverage allowing you to upgrade freely. Installation for HPE options is available as needed. To keep support costs low for everyone, some high value options will require additional support. Additional support is only required on select high value workload accelerators, fibre switches, InfiniBand and UPS batteries over 12KVA. See the specific high value options that require additional support **here**.

Parts and Materials

Hewlett Packard Enterprise will provide HPE-supported replacement parts and materials necessary to maintain the covered hardware product in operating condition, including parts and materials for available and recommended engineering improvements.

Parts and components that have reached their maximum supported lifetime and/or the maximum usage limitations as set forth in the manufacturer's operating manual, product QuickSpecs, or the technical product data sheet will not be provided, repaired, or replaced as part of these services.

The defective media retention service feature option applies only to Disk or eligible SSD/Flash Drives replaced by Hewlett Packard Enterprise due to malfunction.

Pre-configured Models

Entry & Base Models		
SKU Number	**P39122-B21** **P39122-291**	**P39123-B21** **P39123-291**
Model Name	HPE ProLiant DL385 Gen10 Plus v2 7313 2.9GHz 16-core 1P 32GB-R 8SFF 800W PS Server	HPE ProLiant DL385 Gen10 Plus v2 7513 2.6GHz 32-core 1P 32GB-R 8SFF 800W PS Server
Processor	7313 (16-Core, 2.9 GHz, 155W)	7513 (32-Core, 2.6 GHz, 200W)
Number of Processors	One processor	One processor
Memory	32 GB RDIMM DR 3200 MT/s (1x 32 GB)	32 GB RDIMM DR 3200 MT/s (1x 32 GB)
Network Controller	BCM 57416 10GbE 2p BASE-T OCP3 Adptr plus choice of standup card	BCM 57416 10GbE 2p BASE-T OCP3 Adptr plus choice of standup card
Storage Controller	P408i-a **Notes:** 8-Port modular Smart Array.	P408i-a **Notes:** 8-Port modular Smart Array.
Hard Drive	None ship as standard	None ship as standard
Internal Storage	8 SFF Chassis (upgradeable to 24 SFF front + 8 SFF mid + 4SFF rear)	8 SFF Chassis (upgradeable to 24 SFF front + 8 SFF mid + 4SFF rear)
Optical Drive Bay	Optional	Optional
Optical Drive	None ship as standard	None ship as standard
PCI-Express Slots	3-slots (x8, x16, x8) as standard	3-slots (x8, x16, x8) as standard
Power Supply	1x 800W HPE FlexSlot Power Supply	1x 800W HPE FlexSlot Power Supply
Fans	4-standard fans	4-high performance fans
Management	Default: HPE iLO Standard with Intelligent Provisioning, HPE OneView Standard (requires download)	Default: HPE iLO Standard with Intelligent Provisioning, HPE OneView Standard (requires download)
Energy Star	3.0 certified	3.0 certified
Form Factor	2U Rack, SFF Easy Install rails without CMA	2U Rack, SFF Easy Install rails without CMA
Warranty	3-year parts, 3-year labor, 3-year onsite support with next business day response.	3-year parts, 3-year labor, 3-year onsite support with next business day response.

Pre-configured Models

Entry & Base Models		
SKU Number	**P55252-B21** **P55252-291**	**P55284-421**
Model Name	HPE ProLiant DL385 Gen10 Plus v2 7313 3.0GHz 16-core 1P 32GB-R MR416i-a 8SFF 800W PS Server	HPE ProLiant DL385 Gen10 Plus v2 7313 3.0GHz 16-core 1P 32GB-R MR416i-a 8SFF 800W PS EU Server
Processor	7313 (16-Core, 2.9 GHz, 155W)	7313 (16-Core, 2.9 GHz, 155W)
Number of Processors	One processor	One processor
Memory	32 GB RDIMM DR 3200 MT/s (1x 32 GB)	32 GB RDIMM DR 3200 MT/s (1x 32 GB)
Network Controller	BCM 57416 10GbE 2p BASE-T OCP3 Adptr plus choice of standup card	BCM 57416 10GbE 2p BASE-T OCP3 Adptr plus choice of standup card
Storage Controller	MR416i-a **Notes:** Supports Tri-mode.	MR416i-a **Notes:** Supports Tri-mode.
Hard Drive	None ship as standard	None ship as standard
Internal Storage	8 SFF Chassis (upgradeable to 24 SFF front + 8 SFF mid + 4SFF rear)	8 SFF Chassis (upgradeable to 24 SFF front + 8 SFF mid + 4SFF rear)
Optical Drive Bay	Optional	Optional
Optical Drive	None ship as standard	None ship as standard
PCI-Express Slots	3-slots (x8, x16, x8) as standard	3-slots (x8, x16, x8) as standard
Power Supply	1x 800W HPE FlexSlot Power Supply	1x 800W HPE FlexSlot Power Supply **Notes: EU** Lot-9 compliant.
Fans	4-standard fans	4-standard fans
Management	Default: HPE iLO Standard with Intelligent Provisioning, HPE OneView Standard (requires download)	Default: HPE iLO Standard with Intelligent Provisioning, HPE OneView Standard (requires download)
Energy Star	3.0 certified	3.0 certified
Form Factor	2U Rack, SFF Easy Install rails without CMA	2U Rack, SFF Easy Install rails without CMA
Warranty	3-year parts, 3-year labor, 3-year onsite support with next business day response.	3-year parts, 3-year labor, 3-year onsite support with next business day response.

Pre-configured Models

Entry Model (EPYC 7002 based)	
SKU Number	**P58451-B21** **P58451-291** **P58452-421**
Model Name	HPE ProLiant DL385 Gen10 Plus v2 7252 3.1GHz 8-core 1P 32GB-R 8SFF 800W PS Server
Processor	7252 (8-Core, 3.1 GHz, 120W)
Number of Processors	One processor
Memory	32 GB RDIMM DR 3200 MT/s (1x 32 GB)
Network Controller	BCM 57416 10GbE 2p BASE-T OCP3 Adptr plus choice of standup card
Storage Controller	MR416i-a **Notes:** Supports Tri-mode.
Hard Drive	None ship as standard
Internal Storage	8 SFF Chassis (upgradeable to 24 SFF front + 8 SFF mid + 4SFF rear)
Optical Drive Bay	Optional
Optical Drive	None ship as standard
PCI-Express Slots	3-slots (x8, x16, x8) as standard
Power Supply	1x 800W HPE FlexSlot Power Supply (EMEA SKU supports 96% eff. PSU)
Fans	4-standard fans
Management	Default: HPE iLO Standard with Intelligent Provisioning, HPE OneView Standard (requires download)
Energy Star	3.0 certified
Form Factor	2U Rack, SFF Easy Install rails without CMA
Warranty	3-year parts, 3-year labor, 3-year onsite support with next business day response.

Country Code Key

xx1 = B21 Worldwide

xx1 = 291 Japan
xx1 = 421 EMEA

Notes: The -B21 WW SKU is to be ordered in all countries other than Japan and countries required to order EU Lot-9 compliant PSUs.

Configuration Information

European Union (EU) eco-design regulations for server and storage products, known as Lot 9, go into effect on March 1st, 2020. Among other requirements, for servers this directive establishes power thresholds for idle state, as well as efficiency and performance in active state which vary among configurations.
Beginning on January 1st, 2024, units sold into the EU, European Economic Area (EEA), the United Kingdom, or Switzerland must include more efficient AC power supplies: 94% for multi-output and 96% for single-output. HPE Flexible Slot power supplies are single-output, and part numbers 865438-B21, P03178-B21, and P44712-B21 are 96% efficient, thus meeting requirements. HPE is on target to fulfil compliant systems ahead of time and will begin enforcing these requirements in advance to satisfy requests with the current power supplies by the set deadline.
HPE ProLiant Gen10 servers are compliant with Lot9 requirements. For more information regarding HPE Lot 9 conformance, please visit: **https://www.hpe.com/us/en/about/environment/msds-specs-more.html**

This section lists some of the steps required to configure a Factory Integrated Model. To ensure only valid configurations are ordered, Hewlett Packard Enterprise recommends the use of an HPE approved configurator. Contact your local sales representative for information on configurable product offerings and requirements.

- Factory Integrated Models must start with a CTO Server.
- FIO indicates that this option is only available as a factory installable option.
- All Factory Integrated Models will be populated with sufficient hard drive blanks based on the number of initial hard drives ordered with the server.
- Some options may not be integrated at the factory. Contact your local sales representative for additional information.

Step 1: Base Configuration (choose one of the following configurable models)

CTO Server	HPE ProLiant DL385 Gen10 Plus v2 8 SFF CTO Server	HPE ProLiant DL385 Gen10 Plus v2 12 LFF CTO Server	HPE ProLiant DL385 Gen10 Plus v2 8LFF CTO Server	HPE ProLiant DL385 Gen10 Plus v2 24 SFF CTO Server
SKU Number	P38411-B21	P38410-B21	P38409-B21	P38412-B21
Processor	Not included as standard	Not included as standard	Not included as standard	Not included as standard
DIMM Slots	32-DIMM slots**	32-DIMM slots**	32-DIMM slots**	32-DIMM slots**
Storage Controller	Choice of HPE modular Smart Array and PCIe plug-in controller			
PCIe	Three standard in primary riser, upto Eight slots with 2 processors			
Drive Cage - included	8 SFF	12 LFF	8LFF	24 SFF
Network Controller	Choice of OCP or stand up card			
Fans	4-Standard	6 Performance	6-Standard	6-Performance
Management	HPE iLO with Intelligent Provisioning (standard), iLO Advanced and OneView (optional)			
USB	1x 3.0 standard plus iLo front service port	1x 3.0 standard plus iLo front service port	1x 3.0 standard plus iLo front service port	1x 3.0 standard plus iLo front service port

Notes:
- ** 32 DIMM slots require selection of 2 processors
- HPE offers multiple Trade Agreement Act (TAA) compliant configurations to meet the needs of US Federal Government customers. These products are either manufactured or substantially transformed in a designated country. TAA compliance is only provided when HPE options are included as part of factory integrated orders (CTO).
- TAA compliant configuration requires TAA versions of the CTO Server SKUs.
- All CTO servers are Energy Star 3.0 compliant.

Configuration Information

CTO Server	8 SFF CTO Chassis	12 LFF CTO Chassis	8 LFF CTO Chassis	24 SFF CTO Chassis
Included Drive Cage	1x 8 SFF SAS/SATA	12 LFF SAS/SATA	8 LFF SAS/SATA	3x 8 SFF SAS/SATA
Universal Media Bay	Optional	Not available	Not available	Not available
ODD	Optional	Not available	Optional	Not available
8 SFF SAS/SATA Drive Cage	Up to 2 Additional	Not available	Not available	Not available
8 SFF SAS/SATA/NVMe (Mid-tray)	Up to 1 Optional	Not available	Not available	Up to 1 Optional
8 SFF NVMe U.3 Drive Cage	Up to 3	Not available	Not available	Not available
8 SFF NVME U.2 Drive Cage	Up to 3	Not available	Not available	Not available
2 SFF SATA/NVMe (Stacked/Front)	1 Optional	Not available	Not available	Not available
2 SFF SATA/NVMe (Side-by-side/Front)	Not available	Not available	1 Optional	Not available
2 SFF SAS/SATA/NVMe (Rear) **	2 Optional	2 Optional	2 Optional	2 Optional
4 LFF SAS/SATA (Mid-tray)	Not available	1 Optional	1 Optional	Not available
2 LFF SAS/SATA (Rear) ***	Not available	2 Optional	2 Optional	Not available

Notes:

- This applies to CTO configurations, field upgrades may differ depending field configuration.
- When 8 SFF NVMe U.3 or U.2 drive cages is selected instead of SAS/SATA drive cages, HPE DL38X Gen10 8 SFF Front Cage Removal FIO Option (873763-B21) must be selected
- ** NVMe drives supported in rear must be <= 10W
- *** To support 2x2LFF drive cages in rear, different 2LFF drive cages need to be selected. Refer to Drive Cage list in later section for more information

Step 2: Choose Required Options (only one of the following unless otherwise noted)

Please select one –B21 processor required below.

For second processor, please select the same processor model with –B21 from Core Options – HPE Processors section.

For example: first processor, select P38696-B21 then for second processor, select P38696-B21 as well.

Notes:

- 8SFF CTO 1P models ship with 4 standard fans. 12 LFF and 24 SFF CTO Servers ship with 6 Max performance fans included; 8 LFF CTO Servers ship with 6 Standard fans included. Max performance fan kit is available to meet ambient temperature environments are required for rear drives or NVMe SFF configurations.
- Mixing of 2 different processor models are NOT allowed.
- Processors greater than 155W will require the High Performance Heat sink.
- Processors greater than 155W will require the Max Performance Fan Kit.
- Processor kits don't include heat sink and fans.

Step 2a: Choose Processors

Processor Option Kits

AMD EPYC 7763 2.45GHz 64-core 280W Processor for HPE P38696-B21

Notes:

- This processor doesn't include a fan kit or a heat sink kit.
- This processor needs selection of a Max Performance Fan Kit (P14608-B21)
- This processor needs selection of a High Performance Heat Sink Kit (P14610-B21)

AMD EPYC 7713 2.0GHz 64-core 225W Processor for HPE P38693-B21

Notes:

- This processor doesn't include a fan kit or a heat sink kit.

Configuration Information

– This processor needs selection of a Max Performance Fan Kit (P14608-B21)
– This processor needs selection of a High Performance Heat Sink Kit (P14610-B21)

AMD EPYC 7663 2.0GHz 56-core 240W Processor for HPE P38690-B21

Notes:
– This processor doesn't include a fan kit or a heat sink kit.
– This processor needs selection of a Max Performance Fan Kit (P14608-B21)
– This processor needs selection of a High Performance Heat Sink Kit (P14610-B21)

AMD EPYC 7643 2.3GHz 48-core 225W Processor for HPE P39365-B21

Notes:
– This processor doesn't include a fan kit or a heat sink kit.
– This processor needs selection of a Max Performance Fan Kit (P14608-B21)
– This processor needs selection of a High Performance Heat Sink Kit (P14610-B21)

AMD EPYC 75F3 2.95GHz 32-core 280W Processor for HPE P38708-B21

Notes:
– This processor doesn't include a fan kit or a heat sink kit.
– This processor needs selection of a Max Performance Fan Kit (P14608-B21)
– This processor needs selection of a High Performance Heat Sink Kit (P14610-B21)

AMD EPYC 7543 2.8GHz 32-core 225W Processor for HPE P38687-B21

Notes:
– This processor doesn't include a fan kit or a heat sink kit.
– This processor needs selection of a Max Performance Fan Kit (P14608-B21)
– This processor needs selection of a High Performance Heat Sink Kit (P14610-B21)

AMD EPYC 7513 2.6GHz 32-core 200W Processor for HPE P38684-B21

Notes:
– This processor doesn't include a fan kit or a heat sink kit.
– This processor needs selection of a Max Performance Fan Kit (P14608-B21)
– This processor needs selection of a High Performance Heat Sink Kit (P14610-B21)

AMD EPYC 7453 2.75GHz 28-core 225W Processor for HPE P38678-B21

Notes:
– This processor doesn't include a fan kit or a heat sink kit.
– This processor needs selection of a Max Performance Fan Kit (P14608-B21)
– This processor needs selection of a High Performance Heat Sink Kit (P14610-B21)

AMD EPYC 74F3 3.2GHz 24-core 240W Processor for HPE P38705-B21

Notes:
– This processor doesn't include a fan kit or a heat sink kit.
– This processor needs selection of a Max Performance Fan Kit (P14608-B21)
– This processor needs selection of a High Performance Heat Sink Kit (P14610-B21)

AMD EPYC 7443 2.85GHz 24-core 200W Processor for HPE P38681-B21

Notes:
– This processor doesn't include a fan kit or a heat sink kit.
– This processor needs selection of a Max Performance Fan Kit (P14608-B21)
– This processor needs selection of a High Performance Heat Sink Kit (P14610-B21)

Configuration Information

AMD EPYC 7413 2.65GHz 24-core 180W Processor for HPE P38675-B21

Notes:

- This processor doesn't include a fan kit or a heat sink kit.
- This processor needs selection of a Max Performance Fan Kit (P14608-B21)
- This processor needs selection of a High Performance Heat Sink Kit (P14610-B21)

AMD EPYC 73F3 3.5GHz 16-core 240W Processor for HPE P38702-B21

Notes:

- This processor doesn't include a fan kit or a heat sink kit.
- This processor needs selection of a Max Performance Fan Kit (P14608-B21)
- This processor needs selection of a High Performance Heat Sink Kit (P14610-B21)

AMD EPYC 7343 3.2GHz 16-core 190W Processor for HPE P38672-B21

Notes:

- This processor doesn't include a fan kit or a heat sink kit.
- This processor needs selection of a Max Performance Fan Kit (P14608-B21)
- This processor needs selection of a High Performance Heat Sink Kit (P14610-B21)

AMD EPYC 7313 3.0GHz 16-core 155W Processor for HPE P38669-B21

Notes:

- This processor doesn't include a fan kit or a heat sink kit.
- This processor needs selection of a Standard Fan Kit (P37042-B21)
- This processor needs selection of a Standard Heat Sink Kit (P39994-B21)

AMD EPYC 72F3 3.7GHz 8-core 180W Processor for HPE P38699-B21

Notes:

- This processor doesn't include a fan kit or a heat sink kit.
- This processor needs selection of a Max Performance Fan Kit (P14608-B21)
- This processor needs selection of a High Performance Heat Sink Kit (P14610-B21)

AMD EPYC 7773X 2.2GHz 64-core 280W Processor for HPE P46915-B21

Notes:

- This processor doesn't include a fan kit or a heat sink kit.
- See below table for more support conditions

Supported chassis/drive cage and ambient temperature

System Config	Ambient Temperature
24SFF NVMe/SAS/SATA (All Boxes)	25C
16SFF NVMe (Box 1 and 2 only); SAS/SATA (Box 2 and 3 only)	25C
8SFF NVMe (Box 2 only); SAS/SATA (Box 3 only)	30C
12LFF SAS/SATA	25C
8LFF SAS/SATA	30C

Restrictions

1. No mid-tray supported
2. Requires selection of a Max Performance Fan Kit (P14608-B21)
3. Requires selection of a High Performance Heat Sink Kit (P14610-B21)
4. SAS4 drives should be treated as NVMe drives
5. Requires DIMM blanks

AMD EPYC 7573X 2.8GHz 32-core 280W Processor for HPE P46921-B21

Notes:

- This processor doesn't include a fan kit or a heat sink kit.
- See below table for more support conditions.

Configuration Information

Supported chassis/drive cage and ambient temperature	
System Config	**Ambient Temperature**
24SFF NVMe/SAS/SATA (All Boxes)	25C
16SFF NVMe (Box 1 and 2 only); SAS/SATA (Box 2 and 3 only)	25C
8SFF NVMe (Box 2 only); SAS/SATA (Box 3 only)	30C
12LFF SAS/SATA	25C
8LFF SAS/SATA	30C

Restrictions

1. No mid-tray supported
2. Requires selection of a Max Performance Fan Kit (P14608-B21)
3. Requires selection of a High Performance Heat Sink Kit (P14610-B21)
4. SAS4 drives should be treated as NVMe drives
5. Requires DIMM blanks

AMD EPYC 7473X 2.8GHz 24-core 240W Processor for HPE P46924-B21

Notes:

- This processor doesn't include a fan kit or a heat sink kit.
- See below table for more support conditions.

Supported chassis/drive cage and ambient temperature	
System Config	**Ambient Temperature**
16SFF SAS/SATA (Box 2 and 3)	30C
8SFF NVMe (Box 2 only); SAS/SATA (Box 3 only)	30C
8LFF SAS/SATA	30C

Restrictions

1. No mid-tray supported
2. Requires selection of a Max Performance Fan Kit (P14608-B21)
3. Requires selection of a High Performance Heat Sink Kit (P14610-B21)
4. SAS4 drives should be treated as NVMe drives
5. Requires DIMM blanks

AMD EPYC 7373X 3.05GHz 16-core 240W Processor for HPE P46927-B21

Notes:

- This processor doesn't include a fan kit or a heat sink kit.
- See below table for more support conditions.
- This processor could support other configurations with specific ambient temperature requirements. Contact HPE local sales representative for more information.

Supported chassis/drive cage and ambient temperature	
System Config	**Ambient Temperature**
8SFF SAS/SATA (Box 3 only)	25C
8SFF NVMe (Box 2 only)	22C

Restrictions

1. No mid-tray supported
2. Requires selection of a Max Performance Fan Kit (P14608-B21)
3. Requires selection of a High Performance Heat Sink Kit (P14610-B21)
4. SAS4 drives should be treated as NVMe drives
5. Requires DIMM blanks

AMD EPYC 7402 2.8GHz 24-core 180W FIO Processor Kit for HPE ProLiant DL385 Gen10 Plus v2 P57789-B21

Notes:

- This processor doesn't include a fan kit or a heat sink kit.
- This processor needs selection of a Max Performance Fan Kit (P14608-B21)
- This processor needs selection of a High Performance Heat Sink Kit (P14610-B21)

Configuration Information

AMD EPYC 7252 3.1GHz 8-core 120W FIO Processor Kit for HPE ProLiant DL385 Gen10 Plus v2 P57790-B21

Notes:

- This processor doesn't include a fan kit or a heat sink kit.
- This processor needs selection of a Standard Fan Kit (P37042-B21)
- This processor needs selection of a Standard Heat Sink Kit (P39994-B21)

CPU Support in Different Chassis Configurations		
Chassis config	**25C ambient**	**35C ambient**
8SFF, 16SFF SAS/SATA with standard fan & standard heat sink	155W (Turbo to 180W)	155W (Turbo to 180W)
8SFF, 16SFF NVMe with Perf fan & Perf heat sink	280W	225W (Turbo to 240W)
24SFF, >=1SFF NVMe, w/ Perf Fan & Perf heat sink kit	280W	225W (Turbo to 240W)
12LFF w/ Perf Fan & Perf heat sink kit	280W	225W (Turbo to 240W)
8LFF w Standard Fan and Standard Heat sink	155W (Turbo to 180W)	155W (Turbo to 180W)
12+4LFF, 12+4+4LFF w Perf Fan & Perf Heat sink kit	225W (Turbo to 240W)	None
24+8SFF w/ Perf Fan & Perf Heat sink kit	225W (Turbo to 240W)	None

Step 2b: Choose Memory Options

Please select one or more memory from below.

For new Gen10 Plus memory population rule whitepaper and optimal memory performance guidelines, please go to: **http://www.hpe.com/docs/amd-population-rules-Gen10Plus**

For Gen10 Plus memory speed table, please go to: **https://www.hpe.com/psnow/doc/a50000674enw**

Notes:

- Memory DIMM availability with a server platform is dependent upon completion of certification testing.
- The maximum memory speed is a function of the memory type, memory configuration, and processor model.
- System may throttle if ambient temp. is over 30C.
- Memory compatibility may vary or be limited within a specific server family depending upon the specific configuration being requested. Because each server environment and requirements can vary, memory compatibility is based not only upon the server family, but may also be affected by the amount and type of additional hardware options installed within a specific server configuration. For this reason, some HPE memory DIMMs may be qualified for a server model or family and yet occasionally not be supported with limited configurations within that server family. Please consult with the HPE server Quickspecs or your HPE representative if you have any questions regarding memory compatibility with a specific HPE server configuration.

Registered DIMMs (RDIMMs)

HPE 8GB (1x8GB) Single Rank x8 DDR4-3200 CAS-22-22-22 Registered Smart Memory Kit	P07638-B21
HPE 16GB (1x16GB) Single Rank x4 DDR4-3200 CAS-22-22-22 Registered Smart Memory Kit.	P07640-B21
HPE 16GB (1x16GB) Dual Rank x8 DDR4-3200 CAS-22-22-22 Registered Smart Memory Kit	P07642-B21
HPE 32GB (1x32GB) Single Rank x4 DDR4-3200 CAS-22-22-22 Registered Memory Kit	P38454-B21
HPE 32GB (1x32GB) Dual Rank x4 DDR4-3200 CAS-22-22-22 Registered Smart Memory Kit	P07646-B21
HPE 64GB (1x64GB) Dual Rank x4 DDR4-3200 CAS-22-22-22 Registered Smart Memory Kit	P07650-B21
HPE 128GB (1x128GB) Quad Rank x4 DDR4-3200 CAS-22-22-22 Load Reduced Smart Memory Kit	P07652-B21
HPE 256GB (1x256GB) Octal Rank x4 DDR4-3200 CAS-26-22-22 Load Reduced 3DS Smart Memory Kit	P07654-B21

Configuration Information

Recommended System Ambient Temperature for 256GB LRDIMM	
System Config	**Ambient Temperature**
12LFF	Not support
12LFF + 4LFF (mid)	Not support
8LFF	25C
24SFF	Not support (SAS/SATA/NVMe)
24SFF+8SFF (mid)	Not support (SAS/SATA/NVMe)
16SFF (SAS/SATA)	25C
16SFF (NVMe)	Not support
8SFF (SAS/SATA)	25C
8SFF (NVMe)	Not support

Notes:

- Mixing of x4 & x8 memory is not allowed
- 8GB~128GB memory SKUs can run the transfer rate of 3200 MT/s at both 1 DIMM and 2 DIMM per channel
- 256GB memory SKU can run the transfer rate of 3200 MT/s at 1 DIMM per channel, but only 2933 MT/s at 2 DIMM per channel

Rules for mixing different types of DIMMs			
	RDIMM	**LRDIMM**	**3DS LRDIMM (256GB)**
RDIMM	Allowed	Not Allowed	Not Allowed
LRDIMM	Not Allowed	Allowed	Not Allowed
3DS LRDIMM (256GB)	Not Allowed	Not Allowed	Allowed

Memory Blank Kit

HPE DDR4 DIMM Blank Kit P07818-B21

Notes: Required only when configuration includes 4LFF Mid Tray kit or 8SFF Mid Tray kit and a processor(s) that is 155W and above.

Step 2c: Choose Power Supplies

Select one or two power supplies from below.

Notes: Mixing of 2 different power supplies is NOT allowed.

HPE Flex Slot Power Supplies

HPE 500W Flex Slot Platinum Hot Plug Low Halogen Power Supply Kit 865408-B21
HPE 800W Flex Slot Titanium Hot Plug Low Halogen Power Supply Kit 865438-B21
HPE 800W Flex Slot Platinum Hot Plug Low Halogen Power Supply Kit P38995-B21
HPE 800W Flex Slot -48VDC Hot Plug Low Halogen Power Supply Kit 865434-B21
HPE 800W Flex Slot Universal Hot Plug Low Halogen Power Supply Kit 865428-B21
HPE 1600W Flex Slot Platinum Hot Plug Low Halogen Power Supply Kit P38997-B21
HPE 1600W Flex Slot -48VDC Hot Plug Power Supply Kit P17023-B21
HPE 1600W -48VDC Power Cable Lug Kit P36877-B21

Notes:

- HPE 1600W DC PSU Power Lug Option Kit (P36877-B21) or HPE 1600W DC PSU Power Cable Kit (P22173-B21) is to be used with HPE 1600W Flex Slot -48VDC Power Supply Kit
- Only one power cable lug kit needs to be selected with the power supply

Select one or more power supplies.

- 1600W Power supplies only support high line voltage (200VAC to 240VAC).
- Prior to making a power supply selection it is highly recommended that the HPE Power Advisor is run to determine the right size power supply for your server configuration. The HPE Power Advisor is located at:**http://www.hpe.com/info/poweradvisor**.
- All power supplies in a server should match. Mixing Power Supplies is not supported.

Configuration Information

- HPE ProLiant servers ship with an IEC-IEC power cord used for rack mounting with Power Distribution Units (PDUs). Visit **HPE power cords** for a full list of optional power cords.

Step 3: Choose Additional Factory Integratable Options

One of the following from each list may be selected if desired at time of factory integration

HPE Unique Options

HPE DL38X Gen10 Plus Primary NEBS-compliant Riser Kit P14575-B21

Notes:

- This riser kit contains a primary riser PCA with 3 slots for x8/x16/x8
- When ths kit is selected and if customer wants to select Sec or Ter Riser then the risers must be NEBS Risers only (P14575-B21 OR P14577-B21)
- Max =2 of this kit can be selected
- A Max Qty=1 Doublewide GPU per riser. The top x16 PCIe slot connector on this riser kit CANNOT be utilized as the Doublewide GPU occupies this space
- When HPE DL38X Gen10+ Prim NEBS Riser Kit (P14575-B21) is Qty =2, HPE DL38X Gen10+ Tertiary NEBS Riser Kit (P14577-B21) CANNOT be selected
- When P14575-B21 is Qty=1 then it must be installed in Primary. When P14575-B21 is Qty =2 then 2nd processor must be selected
- When this kit is selected, A100 GPU card cannot be selected

HPE DL38X Gen10 Plus Tertiary NEBS-compliant Riser Kit P14577-B21

Notes:

- This riser kit contains a secondary riser PCA with 3 slots for x8/x16/x8 and a tertiary riser PCA with 1 slot for x16
- Requires the selection of a 2nd processor
- When ths kit is selected and if customer wants to select Sec or Ter Riser then the risers must be NEBS Risers only (P14575-B21 OR P14577-B21)
- When HPE DL38X Gen10+ Prim NEBS Riser Kit (P14575-B21) is Qty =2, HPE DL38X Gen10+ Tertiary NEBS Riser Kit (P14577-B21) CANNOT be selected
- Max Qty=2 Doublewide GPU per riser kit
  Max Qty=4 Singlewide/ Half Length GPU per riser kit
- When HPE DL38X Gen10+ Tertiary NEBS Riser Kit (P14577-B21) is selected HPE DL38X Gen10+ Prim NEBS Riser Kit (P14575-B21) MUST BE selected
- When this kit is selected, A100 GPU card cannot be selected

HPE DL38X Gen10 Plus x16/x16 Slot 1/2 FIO Riser Kit P14592-B21

Notes:

- Supports Full Height and Full length cards.
- Bus width x16, x16, Connector Width x16, x16
- Slot 1 or 2 in Primary or Secondary location

HPE DL38X Gen10 Plus x16/x16 Slot 2/3 FIO Riser Kit P14599-B21

Notes:

- Slot 2,3 in Primary location
- Supports Full Height and Full length cards on slot 2 only
- Bus width x16, x16, Connector Width x16, x16
- Requires the option HPE Gen10 Plus Slot1 x16 Adder S2/3 Rsr Kit (P14600-B21), to add additional x16 PCIe Gen4 in slot 1

Configuration Information

HPE DL38X Gen10 Plus x8/x16/x8 Secondary Riser Kit P14587-B21

Notes:
- Requires selection of a 2nd processor
- Slot 1, 2, 3 Secondary location
- Supports Full Height and Full length cards on slot 1, 2 only
- Bus width x8, x16, x8 Connector Width x16, x16, x16

HPE DL38X Gen10 Plus x16/x16 Slot 1/2 Secondary Riser Kit P14589-B21

Notes:
- Requires selection of a 2nd processor
- Slot 1 or 2 Secondary location
- Supports Full Height and Full length cards.
- Bus width x16, x16 Connector Width x16, x16

HPE DL38X Gen10 Plus x16/x16 Slot 2/3 Secondary Riser Kit P14590-B21

Notes:
- Requires selection of a 2nd processor
- Slot 2 or 3 in Secondary location
- Supports Full Height and Full length cards on slot 2 only
- Bus width x16, x16, Connector Width x16, x16

HPE DL38X Gen10 Plus x8/x8 Tertiary Riser Kit P14581-B21

Notes:
- Supports Full Height, Full-length cards and Full Height, Half- length cards.
- Bus width x8, x8, Connector Width x16, x16.

HPE DL38X Gen10 Plus x16 Tertiary Riser Kit P14588-B21

Notes:
- Requires selection of a 2nd processor
- Slot 1 in Tertiary location
- Supports Full Height and Full length cards
- Bus width x16, Connector Width x16

HPE DL38X Gen10 Plus Slot1 x16 Adder for Slot2/3 Riser Kit P14600-B21

Notes:
- Thi is required to add additional x16 PCIe Gen4 lanes for Primary/Secondary Risers (P14599-B21) or (P14590-B21)

HPE DL385 Gen10 Plus Primary/Secondary Riser Cage without Retainer Clip P38771-B21

Notes:
- This is required when an A100 GPU card is selected
- Max =2 of this kit can be selected
- If Q'ty =2 of this kit is selected then a secondary riser must be selected

HPE DL385 Gen10 Plus Tertiary Riser Cage without Retainer Clip P38774-B21

Notes:
- This is required when an A100 GPU card is selected
- Max =1 of this kit can be selected
- This option requires selection of a Tertiary Riser

HPE ProLiant DL385 Gen10 Plus v2 8NVMe U.3 2P Balanced FIO Bundle Kit P42076-B21

Notes:
- This is a trigger SKU having the below list of options bundled together. This bundle SKU needs to be selected in order to support 8 NVMe drives with two processors

Configuration Information

- HPE DL Gen10 Plus 8NVMe CPU1/2 Cable kit (P22829-B21)
- HPE DL300 Gen10 Plus 8SFF x4 U.3 Basic Carrier Drive Cage Kit (P26931-B21)
- HPE DL Gen10 Plus Max Performance Fan (P14608-B21)

– Requires 2nd Processor

HPE ProLiant DL385 Gen10 Plus v2 8NVMe U.3 1P Direct FIO Bundle Kit P42079-B21

Notes:

– This is a trigger SKU having the below list of options bundled together. This bundle SKU needs to be selected in order to support 8 NVMe drives with one processor only
- HPE DL38X Gen10 Plus 8NVMe CPU1 Cable Kit (P22834-B21)
- HPE DL38X Gen10 Plus AROC to NVMe Adapter Kit (P14602-B21)
- HPE DL300 Gen10 Plus 8SFF x4 U.3 Basic Carrier Drive Cage Kit (P26931-B21)
- HPE DL38X Gen10 Plus Max Performance Fan Kit (P14608-B21)

– This requires only one processor

HPE ProLiant DL385 Gen10 Plus v2 16NVMe U.3 2P Balance FIO Bundle Kit P42082-B21

Notes:

– This is a trigger SKU having the below options bundled together. This bundle SKU needs to be selected in order to support 16 NVMe drives with two processors
- HPE DL38X Gen10 Plus 16NVMe CPU1/2 Cable Kit (P22835-B21)
- HPE DL38X Gen10 Plus AROC to NVMe Adapter Kit (P14602-B21)
- HPE DL300 Gen10 Plus 8SFF x4 U.3 Basic Carrier Drive Cage Kit (P26931-B21)
- HPE DL38X Gen10 Plus Max Performance Fan Kit (P14608-B21)

– This requires 2nd Processor to be selected

HPE ProLiant DL385 Gen10 Plus v2 24NVMe U.3 2P Balance FIO Bundle Kit P42085-B21

Notes:

– When this option is selected the following options MUST be populated in the config:
- HPE DL300 Gen10 Plus 8SFF x4 U.3 Basic Carrier Drive Cage Kit (P26931-B21) Qty-3
- HPE DL38X Gen10+ AROC-NVMe Kit (P14602-B21) Qty-1
- HPE DL385 Gen10+ x16 Re-Timer Card (P25527-B21) Qty-2
- HPE DL38X Gen10+ Max Perf Fan Kit (P14608-B21) Qty-1
- HPE DL38X Gen10+ 8NVMe CPU1/2 Cbl Kit (P22829-B21) Qty-1
- HPE DL Gen10 Plus 16NVMe CPU1/2 Cable Kit (P22835-B21) Qty-1
- HPE DL385 Gen10+ Re-Timer PRI Cable Kit (P25602-B21) Qty-2
- HPE DL385 Gen10+ Re-Timer SEC Cable Kit (P25604-B21) Qty-2
- Must select 2nd Processor
- Must select secondary riser

– This option and AROC Controller can not be selected together

– When this option is selected HPE 8SFF Front Remove SPEC Perf FIO (873763-b21) MUST be selected

– When this option is selected HPE DL38X Gen10+ High Perf Heat Sink Kit (P14610-B21) MUST be selected

HPE ProLiant DL385 Gen10 Plus v2 8NVMe U.2 2P Balance FIO Bundle Kit P42088-B21

Notes:

– This is a trigger SKU having the below options bundled together . This bundle SKU needs to be selected in order to support 8 U.2 NVMe drives balanced across 2 processors

– When this option is selected the following options MUST be populated in the config:
- HPE DL Gen10 Plus 8NVMe CPU1/2 Cable kit (P22829-B21) Qty-1
- HPE DL300 Gen10 Plus 8SFF x4 U.2 Basic Carrier Drive Cage Kit (P26932-B21) Qty-1
- HPE DL Gen10 Plus Max Perf Fan (P14608-B21) Qty-1
- Must select 2nd Processor

Configuration Information

- This option and HPE DL38X Gen10+ Slot1 x16 Slot2/3 Kit (P14600-B21) CAN NOT be selected together
- When this option is selected HPE DL38X Gen10+ High Perf Heat Sink Kit (P14610-B21) MUST be selected

HPE ProLiant DL385 Gen10 Plus v2 8NVMe U.2 1P Direct FIO Bundle Kit P42091-B21

Notes:

- This is a trigger SKU having the below options bundled together . This bundle SKU needs to be selected in order to support 8 U.2 NVMe drives with one processor only
- When this option is selected the following options MUST be populated in the config:
  - HPE DL Gen10 Plus 8NVMe CPU1 Cable Kit (P22834-B21) Qty-1
  - HPE Gen10 Plus AROC NVMe Adpt Kit (P14602-B21) Qty-1
  - HPE DL300 Gen10 Plus 8SFF x4 U.2 Basic Carrier Drive Cage Kit (P26932-B21) Qty-1
  - HPE DL Gen10 Plus Max Perf Fan (P14608-B21) Qty-1
- This Option and AROC Controller can not be selected together
- When this option is selected HPE DL38X Gen10+ High Perf Heat Sink Kit (P14610-B21) MUST be selected
- When this option is selected, P14600-B21 CAN NOT be selected with P14599-B21 Primary Riser kit.

HPE ProLiant DL385 Gen10 Plus v2 16NVMe U.2 2P Balance FIO Bundle Kit P42094-B21

Notes:

- This is a trigger SKU having the below options bundled together . This bundle SKU needs to be selected in order to support 16 U.2 NVMe drives balanced across 2 processors
- When this option is selected the following options MUST to be populated in the config:
  - HPE DL Gen10 Plus 16NVMe CPU1/2 Cable Kit (P22835-B21) Qty-1
  - HPE Gen10 Plus AROC NVMe Adpt Kit (P14602-B21) Qty-1
  - HPE DL300 Gen10 Plus 8SFF x4 U.2 Basic Carrier Drive Cage Kit (P26932-B21) Qty-2
  - HPE DL Gen10 Plus Max Perf Fan (P14608-B21) Qty-1
  - Must select 2nd Processor
- This Option and AROC Controller can not be selected together
- When this option is selected HPE DL38X Gen10+ High Perf Heat Sink Kit (P14610-B21) MUST be selected
- This option and HPE DL38X Gen10+ Slot1 x16 Slot2/3 Kit (P14600-B21) CAN NOT be selected together

HPE ProLiant DL385 Gen10 Plus v2 24NVMe U.2 2P Balance FIO Bundle Kit P42097-B21

Notes:

- This is a trigger SKU having the below options bundled together . This bundle SKU needs to be selected in order to support 24 U.2 NVMe drives balanced across 2 processors
- When this option is selected the following options MUST be populated in the config:
  - HPE DL300 Gen10 Plus 8SFF x4 U.2 Basic Carrier Drive Cage Kit (P26932-B21) Qty-3
  - HPE DL38X Gen10+ AROC-NVMe Kit (P14602-B21) Qty-1
  - HPE DL385 Gen10+ x16 Re-Timer Card (P25527-B21) Qty-2
  - HPE DL38X Gen10+ Max Perf Fan Kit (P14608-B21) Qty-1
  - HPE DL38X Gen10+ 8NVMe CPU1/2 Cbl Kit (P22829-B21) Qty-1
  - HPE DL Gen10 Plus 16NVMe CPU1/2 Cable Kit (P22835-B21) Qty-1
  - HPE DL385 Gen10+ Re-Timer PRI Cable Kit (P25602-B21) Qty-2
  - HPE DL385 Gen10+ Re-Timer SEC Cable Kit (P25604-B21) Qty-2
  - Must select 2nd Processor
  - Must select secondary Riser
- This Option and AROC Controller can not be selected together
- When this option is selected HPE DL38X Gen10+ High Perf Heat Sink Kit (P14610-B21) MUST be selected
- This option and HPE DL38X Gen10+ Slot1 x16 Slot2/3 Kit (P14600-B21) CAN NOT be selected together

Configuration Information

HPE DL38X Gen10 8 SFF Front Cage Removal FIO Option 873763-B21

Notes:

- This is a factory integrated only option.
- Will remove the default 8SFF cage in Box 3 of the 8SFF and replace with a Box blank.

HPE Security Options

HPE Server Security Optimized Service for HPE ProLiant (R9S59A) is an optional security upgrade intended for agencies and regulated industries with enhanced security and compliance needs. Applying this option to a DL3XX Gen10/Gen10 Plus CTO server ensures it is hardened by turning on advanced safeguards in place against cyber-exploits throughout the server lifecycle. An iLO Advanced License required for High Security Mode and compatible intrusion detection device option kits are prerequisites for the full optimization service.

Step 4: Choose additional options for Factory Integration from Core and Additional Options sections below

Core Options

Some options may not be integrated at the factory. To ensure only valid configurations are ordered, Hewlett Packard Enterprise recommends the use of an HPE approved configurator. Contact your local sales representative for additional information.

HPE Unique Options

HPE DL38X Gen10 Plus Universal Media Bay Kit P14609-B21

Notes:

- The HPE DL385 Gen10 Plus Universal Media bay provides front Display Port and 2xUSB 2.0; plus support for 2x SFF front drives or 2 NVMe front drives and ODD support (Not included); and can only be located in Box1 in either on 8 SFF or 8+8 SFF model.
- This is a 8SFF model option only.
- This option cannot be ordered when Qty=2 of following options is selected : HPE DL380 Gen10 Box1/2 Cage Bkpln Kit (826691-B21) and HPE DL Gen10 Plus 8SFF x4NVMe/SAS SC Kit (P14578-B21)

HPE DL38X Gen10 Plus System Insight Display Kit P14611-B21

HPE DL38X Gen10 Plus AROC to NVMe Adapter Kit P14602-B21

Notes: Used to support upto 16 NVMe drives with Modular Controller (AROC)

HPE DL38X Gen10 Plus Maximum Performance Fan Kit P14608-B21

Notes:

- For elevated ambient temperature support please see: **http://www.hpe.com/servers/ashrae**
- Max Performance fan kit consists of 6 fans, these will need to replace all the standard fans in the unit, and fill all 6 fan cages.
- The 12 LFF and 24 SFF models (including field upgrades to 24 SFF) will already include 6 Max Performance fans.
- The Max Performance fan kit is needed to support certain Passive GPGPU (Graphics cards) configurations; or ASHRAE operating environments.

HPE ProLiant DL3X5 Gen10 Plus Standard Heat Sink Kit P39994-B21

Notes: Maximum support q'ty =2.

HPE DL38X Gen10 Plus High Performance Heat Sink Kit P14610-B21

Notes: Maximum support q'ty =1. Processor kits above 155W include a High Performance Heat sink.

HPE Gen10 Plus Chassis Intrusion Detection Kit P14604-B21

Notes: This provides a physical connection from the chassis board and hood and detects any physical intrusion into the chassis, providing security during the entire supply chain process of shipping, receiving, distribution, and operation.

HPE DL38X Gen10 Plus 12Gb SAS Expander Card P23388-B21

Notes: HPE DL38X Gen10+ 12LFF SAS Exp Cbl Kit (P23392-B21) must be selected when Expander Card is selected for 12LFF or 8LFF CTO servers.

HPE Processors

Processor Option Kits

Notes:

- Mixing of 2 different processor models are NOT allowed.
- DDR4 memory speed will depend on the quantity and type of DIMMs installed.
- Processors greater than 155W will require the High Performance Heat Sink.
- Processors greater than 155W will require the Max Performance Fan Kit.
- Processor kits don't include heat sink and fans.

AMD EPYC 7763 2.45GHz 64-core 280W Processor for HPE P38696-B21

Notes:

- This processor doesn't include a fan kit or a heat sink kit.
- This processor needs selection of a Max Performance Fan Kit (P14608-B21)
- This processor needs selection of a High Performance Heat Sink Kit (P14610-B21)

Core Options

AMD EPYC 7713 2.0GHz 64-core 225W Processor for HPE P38693-B21

Notes:
- This processor doesn't include a fan kit or a heat sink kit.
- This processor needs selection of a Max Performance Fan Kit (P14608-B21)
- This processor needs selection of a High Performance Heat Sink Kit (P14610-B21)

AMD EPYC 7663 2.0GHz 56-core 240W Processor for HPE P38690-B21

Notes:
- This processor doesn't include a fan kit or a heat sink kit.
- This processor needs selection of a Max Performance Fan Kit (P14608-B21)
- This processor needs selection of a High Performance Heat Sink Kit (P14610-B21)

AMD EPYC 7643 2.3GHz 48-core 225W Processor for HPE P39365-B21

Notes:
- This processor doesn't include a fan kit or a heat sink kit.
- This processor needs selection of a Max Performance Fan Kit (P14608-B21)
- This processor needs selection of a High Performance Heat Sink Kit (P14610-B21)

AMD EPYC 75F3 2.95GHz 32-core 280W Processor for HPE P38708-B21

Notes:
- This processor doesn't include a fan kit or a heat sink kit.
- This processor needs selection of a Max Performance Fan Kit (P14608-B21)
- This processor needs selection of a High Performance Heat Sink Kit (P14610-B21)

AMD EPYC 7543 2.8GHz 32-core 225W Processor for HPE P38687-B21

Notes:
- This processor doesn't include a fan kit or a heat sink kit.
- This processor needs selection of a Max Performance Fan Kit (P14608-B21)
- This processor needs selection of a High Performance Heat Sink Kit (P14610-B21)

AMD EPYC 7513 2.6GHz 32-core 200W Processor for HPE P38684-B21

Notes:
- This processor doesn't include a fan kit or a heat sink kit.
- This processor needs selection of a Max Performance Fan Kit (P14608-B21)
- This processor needs selection of a High Performance Heat Sink Kit (P14610-B21)

AMD EPYC 7453 2.75GHz 28-core 225W Processor for HPE P38678-B21

Notes:
- This processor doesn't include a fan kit or a heat sink kit.
- This processor needs selection of a Max Performance Fan Kit (P14608-B21)
- This processor needs selection of a High Performance Heat Sink Kit (P14610-B21)

AMD EPYC 74F3 3.2GHz 24-core 240W Processor for HPE P38705-B21

Notes:
- This processor doesn't include a fan kit or a heat sink kit.
- This processor needs selection of a Max Performance Fan Kit (P14608-B21)
- This processor needs selection of a High Performance Heat Sink Kit (P14610-B21)

AMD EPYC 7443 2.85GHz 24-core 200W Processor for HPE P38681-B21

Notes:
- This processor doesn't include a fan kit or a heat sink kit.
- This processor needs selection of a Max Performance Fan Kit (P14608-B21)
- This processor needs selection of a High Performance Heat Sink Kit (P14610-B21)

Core Options

AMD EPYC 7413 2.65GHz 24-core 180W Processor for HPE	P38675-B21

Notes:
- This processor doesn't include a fan kit or a heat sink kit.
- This processor needs selection of a Max Performance Fan Kit (P14608-B21)
- This processor needs selection of a High Performance Heat Sink Kit (P14610-B21)

AMD EPYC 73F3 3.5GHz 16-core 240W Processor for HPE	P38702-B21

Notes:
- This processor doesn't include a fan kit or a heat sink kit.
- This processor needs selection of a Max Performance Fan Kit (P14608-B21)
- This processor needs selection of a High Performance Heat Sink Kit (P14610-B21)

AMD EPYC 7343 3.2GHz 16-core 190W Processor for HPE	P38672-B21

Notes:
- This processor doesn't include a fan kit or a heat sink kit.
- This processor needs selection of a Max Performance Fan Kit (P14608-B21)
- This processor needs selection of a High Performance Heat Sink Kit (P14610-B21)

AMD EPYC 7313 3.0GHz 16-core 155W Processor for HPE	P38669-B21

Notes:
- This processor doesn't include a fan kit or a heat sink kit.
- This processor needs selection of a Standard Fan Kit (P37042-B21)
- This processor needs selection of a Standard Heat Sink Kit (P39994-B21)

AMD EPYC 72F3 3.7GHz 8-core 180W Processor for HPE	P38699-B21

Notes:
- This processor doesn't include a fan kit or a heat sink kit.
- This processor needs selection of a Max Performance Fan Kit (P14608-B21)
- This processor needs selection of a High Performance Heat Sink Kit (P14610-B21)

Memory Selection

To streamline the configuration process for HPE ProLiant Gen10 Plus servers and to provide the best product availability, Hewlett Packard Enterprise recommends memory from the list located here: **http:hpe.com/products/recommend**.
Best product availability is limited to US, Canada, and Latin America at this time.

HPE Memory

Notes: Memory compatibility may vary or be limited within a specific server family depending upon the specific configuration being requested. Because each server environment and requirements can vary, memory compatibility is based not only upon the server family, but may also be affected by the amount and type of additional hardware options installed within a specific server configuration. For this reason, some HPE memory DIMMs may be qualified for a server model or family and yet occasionally not be supported with limited configurations within that server family. Please consult with the HPE server Quickspecs or your HPE representative if you have any questions regarding memory compatibility with a specific HPE server configuration.

Registered DIMMs (RDIMMs)

HPE 8GB (1x8GB) Single Rank x8 DDR4-3200 CAS-22-22-22 Registered Smart Memory Kit	P07638-B21
HPE 16GB (1x16GB) Single Rank x4 DDR4-3200 CAS-22-22-22 Registered Smart Memory Kit.	P07640-B21
HPE 16GB (1x16GB) Dual Rank x8 DDR4-3200 CAS-22-22-22 Registered Smart Memory Kit	P07642-B21
HPE 32GB (1x32GB) Single Rank x4 DDR4-3200 CAS-22-22-22 Registered Memory Kit	P38454-B21
HPE 32GB (1x32GB) Dual Rank x4 DDR4-3200 CAS-22-22-22 Registered Smart Memory Kit	P07646-B21
HPE 64GB (1x64GB) Dual Rank x4 DDR4-3200 CAS-22-22-22 Registered Smart Memory Kit	P07650-B21

Core Options

Load Reduced DIMMs (LRDIMMs)

HPE 128GB (1x128GB) Quad Rank x4 DDR4-3200 CAS-22-22-22 Load Reduced Smart Memory Kit P07652-B21
HPE 256GB (1x256GB) Octal Rank x4 DDR4-3200 CAS-26-22-22 Load Reduced 3DS Smart Memory Kit P07654-B21

Recommended System Ambient Temperature for 256GB LRDIMM	
System Config	**Ambient Temperature**
12LFF	Not support
12LFF + 4LFF (mid)	Not support
8LFF	25C
24SFF	Not support (SAS/SATA/NVMe)
24SFF+8SFF (mid)	Not support (SAS/SATA/NVMe)
16SFF (SAS/SATA)	25C
16SFF (NVMe)	Not support
8SFF (SAS/SATA)	25C
8SFF (NVMe)	Not support

Notes:

- Memory DIMM availability with a server platform is dependent upon completion of certification testing.
- The maximum memory speed is a function of the memory type, memory configuration, and processor model.
- Mixing of x4 & x8 memory is not allowed
- 8GB~128GB memory SKUs can run the transfer rate of 3200 MT/s at both 1 DIMM and 2 DIMM per channel
- 256GB memory SKU can run the transfer rate of 3200 MT/s at 1 DIMM per channel, but only 2933 MT/s at 2 DIMM per channel
- 128GB and 256GB LRDIMM are not supported in a SFF chassis with mid-tray configurations
- 256GB LRDIMM cannot support in a 12LFF chassis, 12LFF chassis + 4LFF mid tray, 24SFF chassis, 24SFF chassis + 8SFF mid tray and 8SFF/16SFF chassis with NVMe drives installed

HPE Optical Drives

HPE 9.5mm SATA DVD-ROM Optical Drive 726536-B21

Notes:

- HPE DL385 Gen10 Plus Universal Media Bay Kit (P14609-B21) is required for this option on a SFF model.
- Supported only on 8 SFF & 8 LFF Models

HPE 9.5mm SATA DVD-RW Optical Drive 726537-B21

Notes:

- HPE DL385 Gen10 Plus Universal Media Bay Kit (P14609-B21) is required for this option on a SFF model.
- Supported only on 8 SFF & 8 LFF Models

HPE Mobile USB DVD-RW Optical Drive 701498-B21

HPE Drives

Enterprise - 12G SAS - SFF Drives

HPE 300GB SAS 12G Mission Critical 15K SFF BC 3-year Warranty Multi Vendor HDD P28028-B21
HPE 300GB SAS 12G Mission Critical 10K SFF BC 3-year Warranty Multi Vendor HDD P40430-B21
HPE 600GB SAS 12G Mission Critical 10K SFF BC 3-year Warranty Multi Vendor HDD P53561-B21
HPE 600GB SAS 12G Mission Critical 15K SFF BC 3-year Warranty Multi Vendor HDD P53560-B21
HPE 900GB SAS 12G Mission Critical 15K SFF BC 3-year Warranty Multi Vendor HDD P40432-B21
HPE 1.2TB SAS 12G Mission Critical 10K SFF BC 3-year Warranty Multi Vendor HDD P28586-B21
HPE 1.8TB SAS 12G Mission Critical 10K SFF BC 3-year Warranty 512e Multi Vendor HDD P53562-B21
HPE 2.4TB SAS 12G Mission Critical 10K SFF BC 3-year Warranty 512e Multi Vendor HDD P28352-B21

Core Options

Midline - 12G SAS - SFF Drives

HPE 1TB SAS 12G Business Critical 7.2K SFF BC 1-year Warranty HDD	P53563-B21
HPE 2TB SAS 12G Business Critical 7.2K SFF BC 1-year Warranty 512e HDD	P28505-B21

Midline - 12G SAS - LFF Drives

HPE 2TB SAS 12G Business Critical 7.2K LFF LP 1-year Warranty Multi Vendor HDD	833926-B21
HPE 4TB SAS 12G Business Critical 7.2K LFF LP 1-year Warranty Multi Vendor HDD	833928-B21
HPE 6TB SAS 12G Business Critical 7.2K LFF LP 1-year Warranty 512e Multi Vendor HDD	861746-B21
HPE 8TB SAS 12G Business Critical 7.2K LFF LP 1-year Warranty 512e Multi Vendor HDD	834031-B21
HPE 10TB SAS 12G Business Critical 7.2K LFF LP 1-year Warranty 512e ISE Multi Vendor HDD	P53556-B21
HPE 12TB SAS 12G Business Critical 7.2K LFF LP 1-year Warranty Helium 512e Multi Vendor HDD	881781-B21
HPE 14TB SAS 12G Business Critical 7.2K LFF LP 1-year Warranty Helium 512e Multi Vendor HDD	P09155-B21
HPE 16TB SAS 12G Business Critical 7.2K LFF LP 1-year Warranty Helium 512e ISE Multi Vendor HDD	P23608-B21
HPE 18TB SAS 12G Business Critical 7.2K LFF LP 1-year Warranty Helium 512e ISE Multi Vendor HDD	P37669-B21
HPE 20TB SAS 12G Business Critical 7.2K LFF LP 1-year Warranty Helium 512e ISE Multi Vendor HDD	P53553-B21

Midline - 6G SATA - SFF Drives

HPE 1TB SATA 6G Business Critical 7.2K SFF BC 1-year Warranty HDD	P28610-B21
HPE 2TB SATA 6G Business Critical 7.2K SFF BC 1-year Warranty 512e HDD	P28500-B21

Midline - 6G SATA - LFF Drives

HPE 1TB SATA 6G Business Critical 7.2K LFF LP 1-year Warranty Multi Vendor HDD	861686-B21
HPE 2TB SATA 6G Business Critical 7.2K LFF LP 1-year Warranty Multi Vendor HDD	861681-B21
HPE 4TB SATA 6G Business Critical 7.2K LFF LP 1-year Warranty Multi Vendor HDD	861683-B21
HPE 6TB SATA 6G Business Critical 7.2K LFF LP 1-year Warranty 512e Multi Vendor HDD	861742-B21
HPE 8TB SATA 6G Business Critical 7.2K LFF LP 1-year Warranty 512e Multi Vendor HDD	834028-B21
HPE 10TB SATA 6G Business Critical 7.2K LFF LP 1-year Warranty 512e ISE Multi Vendor HDD	P53557-B21
HPE 12TB SATA 6G Business Critical 7.2K LFF LP 1-year Warranty Helium 512e Multi Vendor HDD	881787-B21
HPE 14TB SATA 6G Business Critical 7.2K LFF LP 1-year Warranty Helium 512e Multi Vendor HDD	P09165-B21
HPE 16TB SATA 6G Business Critical 7.2K LFF LP 1-year Warranty Helium 512e ISE Multi Vendor HDD	P23449-B21
HPE 18TB SATA 6G Business Critical 7.2K LFF LP 1-year Warranty Helium 512e ISE Multi Vendor HDD	P37678-B21
HPE 20TB SATA 6G Business Critical 7.2K LFF LP 1-year Warranty Helium 512e ISE Multi Vendor HDD	P53554-B21

SED (Self-Encryption Drive) HDDs

HPE 1.2TB SAS 12G Mission Critical 10K SFF BC 3-year Warranty Self-encrypting FIPS HDD	P28622-B21
HPE 2.4TB SAS 12G Mission Critical 10K SFF BC 3-year Warranty 512e Self-encrypting FIPS HDD	P28618-B21

Notes:

- Requirements for MR Tri-mode controller SED support
  - TPM is not required for Local Key Management as key is stored in controller
  - iLO Advanced is required for Remote Key Management. Key is stored in remote key manager
  - (Ex. ESKM)

SSD Selection

To streamline the configuration process for HPE ProLiant Gen10 Plus servers and to provide the best product availability, HPE recommends SSDs from the list located here: **http://www.hpe.com/products/recommend**.

Read Intensive - 12G SAS - SFF - Solid State Drives

HPE 960GB SAS 12G Read Intensive SFF BC Value SAS Multi Vendor SSD	P40506-B21
HPE 960GB SAS 24G Read Intensive SFF BC Multi Vendor SSD	P49029-B21
HPE 1.92TB SAS 12G Read Intensive SFF BC Value SAS Multi Vendor SSD	P40507-B21
HPE 1.92TB SAS 24G Read Intensive SFF BC Multi Vendor SSD	P49031-B21
HPE 3.84TB SAS 12G Read Intensive SFF BC Value SAS Multi Vendor SSD	P40508-B21
HPE 3.84TB SAS 24G Read Intensive SFF BC Multi Vendor SSD	P49035-B21

Core Options

HPE 7.68TB SAS 12G Read Intensive SFF BC Value SAS Multi Vendor SSD	P40509-B21
HPE 7.68TB SAS 24G Read Intensive SFF BC Multi Vendor SSD	P49041-B21
HPE 15.36TB SAS 24G Read Intensive SFF BC Multi Vendor SSD	P49045-B21
Mixed Use - 12G SAS - SFF - Solid State Drives	
HPE 800GB SAS 24G Mixed Use SFF BC Multi Vendor SSD	P49047-B21
HPE 960GB SAS 12G Mixed Use SFF BC Value SAS Multi Vendor SSD	P40510-B21
HPE 1.6TB SAS 24G Mixed Use SFF BC Multi Vendor SSD	P49049-B21
HPE 1.92TB SAS 12G Mixed Use SFF BC Value SAS Multi Vendor SSD	P40511-B21
HPE 3.2TB SAS 24G Mixed Use SFF BC Multi Vendor SSD	P49053-B21
HPE 3.84TB SAS 12G Mixed Use SFF BC Value SAS Multi Vendor SSD	P40512-B21
HPE 6.4TB SAS 24G Mixed Use SFF BC Multi Vendor SSD	P49057-B21
Mixed Use SAS– LFF- Solid State Drives	
HPE 960GB SAS 12G Mixed Use LFF LPC Value SAS Multi Vendor SSD	P37009-B21
Read Intensive SAS– LFF- Solid State Drives	
HPE 7.68TB SAS 24G Read Intensive LFF LPC Multi Vendor SSD	P49040-B21
Mixed Use - 6G SATA - SFF - Solid State Drives	
HPE 480GB SATA 6G Mixed Use SFF BC Multi Vendor SSD	P40502-B21
HPE 480GB SATA 6G Mixed Use SFF BC PM897 SSD	P44011-B21
HPE 960GB SATA 6G Mixed Use SFF BC Multi Vendor SSD	P40503-B21
HPE 960GB SATA 6G Mixed Use SFF BC PM897 SSD	P44012-B21
HPE 1.92TB SATA 6G Mixed Use SFF BC Multi Vendor SSD	P40504-B21
HPE 1.92TB SATA 6G Mixed Use SFF BC PM897 SSD	P44013-B21
HPE 3.84TB SATA 6G Mixed Use SFF BC Multi Vendor SSD	P40505-B21
Read Intensive - 6G SATA - SFF - Solid State Drives	
HPE 240GB SATA 6G Read Intensive SFF BC Multi Vendor SSD	P40496-B21
HPE 480GB SATA 6G Read Intensive SFF BC Multi Vendor SSD	P40497-B21
HPE 480GB SATA 6G Read Intensive SFF BC PM893 SSD	P44007-B21
HPE 960GB SATA 6G Read Intensive SFF BC Multi Vendor SSD	P40498-B21
HPE 960GB SATA 6G Read Intensive SFF BC PM893 SSD	P44008-B21
HPE 1.92TB SATA 6G Read Intensive SFF BC Multi Vendor SSD	P40499-B21
HPE 1.92TB SATA 6G Read Intensive SFF BC PM893 SSD	P44009-B21
HPE 3.84TB SATA 6G Read Intensive SFF BC Multi Vendor SSD	P40500-B21
HPE 3.84TB SATA 6G Read Intensive SFF BC PM893 SSD	P44010-B21
HPE 7.68TB SATA 6G Read Intensive SFF BC Multi Vendor SSD	P40501-B21
Very Read Optimized - 6G SATA - SFF - Solid State Drives	
HPE 7.68TB SATA 6G Very Read Optimized SFF BC 5400 SSD	P58228-B21
Read Intensive – 6G SATA - LFF – Solid State Drives	
HPE 960GB SATA 6G Read Intensive LFF LPC Multi Vendor SSD	P47808-B21

Core Options

Very Read Optimized - 6G SATA - LFF - Solid State Drives

HPE 7.68TB SATA 6G Very Read Optimized LFF LPC 5400 SSD	P58232-B21

Read Intensive - NVMe - SFF - Solid State Drives

HPE 960GB NVMe Gen4 Mainstream Performance Read Intensive SFF BC U.3 Static Multi Vendor SSD	P47844-B21
HPE 1.9TB NVMe Gen4 Mainstream Performance Read Intensive SFF BC U.3 Static Multi Vendor SSD	P47845-B21
HPE 3.84TB NVMe Gen4 Mainstream Performance Read Intensive SFF BC U.3 Static Multi Vendor SSD	P47846-B21
HPE 7.68TB NVMe Gen4 Mainstream Performance Read Intensive SFF BC U.3 Static Multi Vendor SSD	P47847-B21

Mixed Use - NVMe - SFF - Solid State Drives

HPE 800GB NVMe Gen4 Mainstream Performance Mixed Use SFF BC U.3 Static Multi Vendor SSD	P47837-B21
HPE 1.6TB NVMe Gen4 Mainstream Performance Mixed Use SFF BC U.3 Static Multi Vendor SSD	P47838-B21
HPE 3.2TB NVMe Gen4 Mainstream Performance Mixed Use SFF BC U.3 Static Multi Vendor SSD	P47839-B21
HPE 6.4TB NVMe Gen4 Mainstream Performance Mixed Use SFF BC U.3 Static Multi Vendor SSD	P47840-B21

Notes:

- PE8010 and PE8030 NVMe drives cannot be supported with NVMe Adapters P25526-B21 or P25527-B21
- PE8010 and PE8030 NVMe drives cannot be supported with SR932i-a or SR416i-p tri-mode controllers.
- SR100i SW RAID can only be supported with PM1733 and PM1735 NVMe drives.

SED (Self-Encryption Drive) SSDs

HPE 800GB SAS 24G Mixed Use SFF BC Self-encrypting FIPS PM6 SSD	P41400-B21
HPE 1.6TB SAS 24G Mixed Use SFF BC Self-encrypting FIPS PM6 SSD	P41401-B21
HPE 3.84TB SAS 24G Read Intensive SFF BC Self-encrypting FIPS PM6 SSD	P41398-B21
HPE 7.68TB SAS 24G Read Intensive SFF BC Self-encrypting FIPS PM6 SSD	P41399-B21
HPE 960GB SATA 6G Mixed Use SFF BC Self-encrypting 5400M SSD	P58244-B21
HPE 1.92TB SATA 6G Mixed Use SFF BC Self-encrypting 5400M SSD	P58248-B21
HPE 480GB SATA 6G Read Intensive SFF BC Self-encrypting 5400P SSD	P58236-B21
HPE 1.92TB SATA 6G Read Intensive SFF BC Self-encrypting 5400P SSD	P58240-B21
HPE 1.6TB NVMe Gen4 High Performance Mixed Use SFF BC Self-encrypting FIPS U.3 CM6 SSD	P41404-B21
HPE 3.2TB NVMe Gen4 High Performance Mixed Use SFF BC Self-encrypting FIPS U.3 CM6 SSD	P41405-B21
HPE 1.92TB NVMe Gen4 High Performance Read Intensive SFF BC Self-encrypting FIPS U.3 CM6 SSD	P41402-B21
HPE 3.84TB NVMe Gen4 High Performance Read Intensive SFF BC Self-encrypting FIPS U.3 CM6 SSD	P41403-B21

Notes:

- Requirements for Direct Attach SED support
  - TPM2.0 is required for Local Key Management. Keys will be locally encrypted and stored by TPM
  - iLO Advanced is required for Remote Key Management. Key is stored in remote key manager (Ex. ESKM)
- Requirements for MR Tri-mode controller SED support
  - TPM is not required for Local Key Management as key is stored in controller
  - iLO Advanced is required for Remote Key Management. Key is stored in remote key manager (Ex. ESKM)

Internal Dual M.2 Kit

HPE Universal SATA 6G AIC HHHL M.2 SSD Enablement Kit	878783-B21

Notes:

- SATA M.2 cannot be supported in LFF/SFF chassis with mid tray configuration due to thermal concern
- In 24SFF/12LFF/8LFF chassis, only slot 1 can support it and under ambient temperature of 30C.
- If the Max CPU power is lower than 240W, the supported ambient temp. is 30C
- If the Max CPU power is higher than 240W, the supported ambient temp. is 25C
- This kit requires a PCIe slot and supports up to two M.2 SSDs which should be the same SSD SKUs

Core Options

Read Intensive - M.2 - Solid State Drives

HPE 240GB SATA 6G Read Intensive M.2 Multi Vendor SSD	P47817-B21
HPE 480GB SATA 6G Read Intensive M.2 Multi Vendor SSD	P47818-B21

Hard Drive Blank Kits

HPE Gen9 LFF HDD Spade Blank Kit	807878-B21
HPE Small Form Factor Hard Drive Blank Kit	666987-B21

HPE Tape Backup

For the complete range of tape drives, autoloaders, libraries and media see:
https://www.hpe.com/us/en/storage/storeever-tape-storage.html.

For hardware and software compatibility of Hewlett Packard Enterprise tape backup products
http://www.hpe.com/storage/BURAcompatibility

Hard Drive Kits

HPE DL38X Gen10 Plus 4LFF SAS/SATA Low Profile Mid Tray Drive Cage Kit P14503-B21

Notes:

- Supported with both the 8 and 12 LFF model.
- With this mid-tray only single-wide (8.5-inch cards with connections or less) cards are supported. Full Length PCIe cards cannot be supported.
- This requires Max Performance Fan kit (P14608-B21).
- Requires DIMM Blank kit (P07818-B21), if this option is selected with processor 155W and above.
- This mid tray drive cage kit contains 1U high performance heat sink(s). Please note this is not the same heat sink as included in the High Performance Heat Sink Kit (P14610-B21)

HPE ProLiant DL385 Gen10 Plus v2 4LFF SAS/SATA LP Drive Cage Kit P55517-B21

Notes:

- Supported with both the 8 and 12 LFF model.
- With this mid-tray only single-wide (8.5-inch cards with connections or less) cards are supported. Full Length PCIe cards cannot be supported.
- This requires Max Performance Fan kit (P14608-B21).
- Requires DIMM Blank kit (P07818-B21), if this option is selected with processor 155W and above.
- This mid tray drive cage kit contains 1U high performance heat sink(s). Please note this is not the same heat sink as included in the High Performance Heat Sink Kit (P14610-B21)
- When this Mid Tray is selected with 8LFF CTO Server and no other controllers selected then 2P must be selected.

HPE ProLiant DL385 Gen10 Plus v2 8SFF x1 U.3 BC Mid Tray Basic Drive Cage Kit P39600-B21

Notes:

- Supported with both the 8 and 24 SFF model.
- With this mid-tray only single-wide (8.5-inch cards with connections or less) cards are supported. Full Length PCIe cards cannot be supported.
- This requires Max Performance Fan kit (P14608-B21).
- Requires DIMM Blank kit (P07818-B21), if this option is selected with processor 155W and above.
- This mid tray drive cage kit contains 1U high performance heat sink(s). Please note this is not the same heat sink as included in the High Performance Heat Sink Kit (P14610-B21)

Core Options

HPE ProLiant DL385 Gen10 Plus v2 8SFF x4 U.3 BC Mid Tray Premium Drive Cage Kit P38847-B21

Notes:

- Supported with both the 8 and 24 SFF model.
- With this mid-tray only single-wide (8.5-inch cards with connections or less) cards are supported. Full Length PCIe cards cannot be supported.
- This requires Max Performance Fan kit (P14608-B21).
- Requires DIMM Blank kit (P07818-B21), if this option is selected with processor 155W and above.
- This mid tray drive cage kit contains 1U high performance heat sink(s). Please note this is not the same heat sink as included in the High Performance Heat Sink Kit (P14610-B21)

HPE ProLiant DL38X Gen10 Plus 2LFF Primary Riser Cage Kit P14579-B21

Notes:

- Supported only on 8 LFF & 12 LFF models.
- This option occupies primary riser slot.
- When P14579-B21 and P14580-B21 are selected. Double-wide GPUs cannot be selected
- When P14579-B21 is selected, maximum 1x double-wide GPU can be supported
- When P14579-B21 is selected, HPE DL38X Gen10+ Slot1 x16 Slot2/3 Kit (P14600-B21) CANNOT be selected

HPE ProLiant DL38x Gen10 Plus 2LFF UBM to Tri-Mode LP Primary Riser Backplane Kit P55518-B21

Notes:

- Supported only on 8 LFF & 12 LFF models.
- This option occupies primary riser slot.
- This 2LFF Drive cage needs support of trimode controllers from the following list:
  - HPE MR416i-p Gen10+ Controller
  - HPE MR416i-a Gen10+ Controller
  - HPE MR216i-p Gen10+ Controller
  - HPE MR216i-a Gen10+ Controller
- When this is selected. Double-wide GPUs cannot be selected
- When this is selected, maximum 1x double-wide GPU can be supported
- When this is selected, HPE DL38X Gen10+ Slot1 x16 Slot2/3 Kit (P14600-B21) CANNOT be selected

HPE ProLiant DL38X Gen10 Plus 2LFF Tertiary Riser Cage Kit P14580-B21

Notes:

- Supported only on 8 LFF & 12 LFF Models.
- This option occupies secondary and tertiary riser slots.
- When P14579-B21 and P14580-B21 are selected. Double-wide GPUs cannot be selected
- When P14580-B21 is selected, maximum 1x double-wide GPU can be supported
- This option (P14580-B21) CAN NOT be selected when HPE DL38X Gen10+ Slot1 x16 Slot2/3 Kit (P14600-B21) Qty is 2

HPE ProLiant DL38x Gen10 Plus 2LFF UBM to Tri-Mode LP Tertiary Riser Backplane Kit P55519-B21

Notes:

- Supported only on 8 LFF & 12 LFF Models.
- This option occupies secondary and tertiary riser slots.
- This 2LFF Drive cage needs support of trimode controllers from the following list:
  - HPE MR416i-p Gen10+ Controller
  - HPE MR416i-a Gen10+ Controller
  - HPE MR216i-p Gen10+ Controller
  - HPE MR216i-a Gen10+ Controller
- When this is selected. Double-wide GPUs cannot be selected
- When this is selected, maximum 1x double-wide GPU can be supported

Core Options

- This option CANNOT be selected when HPE DL38X Gen10+ Slot1 x16 Slot2/3 Kit (P14600-B21) Qty is 2

HPE ProLiant DL38X Gen10 Plus 2SFF x4 Tri-Mode 24G U.3 BC Front/Tertiary Drive Cage Kit P26922-B21

Notes:

- This option can be used with all CTO Servers.
- Max Qty=2, allowed on 8 SFF model; Max Qty=1, allowed on 8 LFF, 12 LFF and 24 SFF models.
- Only 1 drive cage can be ordered with 12 LFF and 24 SFF models.
- 8SFF Model with 2 drive cages, requires Universal Media Bay.
- When Qty=2, HPE DL38X Gen10+ MiniSAS 3POS Cbl (P14605-B21) must be selected.
- When supported in front, only SATA/NVMe. When supported in rear, can support SAS/SATA/NVMe.
- When supported in rear with NVMe. Only 1 NVMe drive can be supported and must be lower or equal to 10W.
- When this drive cage is installed in rear and P26924-B21 in front within a 8LFF CTO server, and no tri-mode controller or NVMe bundle kits are ordered, max=3 NVMe drives can be supported as direct attach
- When this drive cage is installed in rear and another P26922-B21 in front with Universal Media Bay within a 8SFF CTO server, and no tri-mode controller or NVMe bundle kits are ordered, max=3 NVMe drives can be supported as direct attach

HPE ProLiant DL385 Gen10 Plus v2 2SFF 4x U.3 Premium Secondary Riser Kit P35418-B21

Notes:

- This 2SFF drive cage kit can support either NVMe, SAS or SATA type of drives in front or rear.
- This drive cage occupies Secondary slot therefore no other secondary riser can be selected. Double-wide GPU cannot be installed on this riser.
- When this option is selected, Tertiary riser cannot be selected.
- When supported with NVMe. Only 1 NVMe drive can be supported and must be lower or equal to 10W.
- When this drive cage is installed in rear and P26924-B21 in front within a 8LFF CTO server, and no tri-mode controller or NVMe bundle kits are ordered, max=3 NVMe drives can be supported as direct attach
- When this drive cage is installed in rear and P26922-B21 in front with Universal Media Bay within a 8SFF CTO server, and no tri-mode controller or NVMe bundle kits are ordered, max=3 NVMe drives can be supported as direct attach

HPE ProLiant DL300 Gen10 Plus 2U 2SFF x4 Tri-Mode 24G U.3 BC Side-by-Side Drive Cage Kit P26924-B21

Notes:

- This 2SFF drive cage kit can only support either NVMe or SATA type of drives in front. No SAS drives can be supported
- This option can be only be used with 8 LFF model.
- Only SATA/NVMe drives can be supported.
- When this drive cage is installed and with a P26922-B21 in rear within a 8LFF CTO server, and no tri-mode controller or NVMe bundle kits are ordered, max=3 NVMe drives can be supported as direct attach

HPE ProLiant DL300 Gen10 Plus 2U 8SFF SAS/SATA 12G BC Front Bay 1/2 Drive Cage Kit P26930-B21

Notes:

- Supported only on 8 SFF Model.
- Maximum up to 2 drive cages can be selected.
- The 24 SFF chassis doesn't need to select this drive cage kit since the chassis already includes 3x 8SFF SAS/SATA drive cages.

Core Options

HPE ProLiant DL38x Gen10 Plus 8SFF SAS/SATA to Tri-Mode Controller Backplane Kit P55516-B21

Notes:

- Supported only on 8 SFF Model.
- Maximum up to 2 drive cages can be selected.
- This 8SFF SAS/SATA Drive cage needs trimode support from the following list of controllers:
  - HPE MR416i-p Gen10+ Controller
  - HPE MR416i-a Gen10+ Controller
  - HPE MR216i-p Gen10+ Controller
  - HPE MR216i-a Gen10+ Controlle

HPE ProLiant DL300 Gen10 Plus 2U 8SFF x4 Tri-Mode 24G U.3 BC Front Drive Cage Kit P26931-B21

Notes:

- Supported only on 8 SFF Model.
- Maximum up to 3 drive cages can be selected.
- When this drive cage is selected, NVMe Bundle Kit (Min=1, Max=1) or Tri-mode controller must be selected.
- When 8 SFF NVMe U.3 or U.2 drive cages is selected instead of SAS/SATA drive cages, HPE DL38X Gen10 8 SFF Front Cage Removal FIO Option (873763-B21) must be selected.

HPE ProLiant DL300 Gen10 Plus 2U 8SFF x1 Tri-Mode 24G U.3 BC Front Drive Cage Kit P27194-B21

Notes:

- Supported only on 8 SFF Model.
- SAS/SATA controllers or Embedded controller (SR100i) cannot support this drive cage. Only Tri-mode controllers can support it.
- When 8 SFF NVMe U.3 or U.2 drive cages is selected instead of SAS/SATA drive cages, HPE DL38X Gen10 8 SFF Front Cage Removal FIO Option (873763-B21) must be selected.

HPE ProLiant DL300 Gen10 Plus 2U 8SFF x4 NVMe 16G U.2 BC Front Drive Cage Kit P26932-B21

Notes:

- Supported only on 8 SFF Model.
- Maximum up to 3 drive cages can be selected.
- When this drive cage is selected, NVMe Bundle Kit (Min=1, Max=1) or Tri-mode controller must be selected.
- SAS/SATA controllers or Embedded controller (SR100i) cannot support this drive cage. Only Tri-mode controllers can support it.
- When 8 SFF NVMe U.3 or U.2 drive cages is selected instead of SAS/SATA drive cages, HPE DL38X Gen10 8 SFF Front Cage Removal FIO Option (873763-B21) must be selected.

Media Bay Kits

HPE DL38X Gen10 Plus Universal Media Bay Kit P14609-B21

Notes:

- The HPE DL385 Gen10 Plus Universal Media bay provides front Display Port and 2xUSB 2.0; plus support for 2x SFF front drives or 2 NVMe front drives and ODD support (Not included); and can only be located in Box1 in either an 8 SFF or 8+8 SFF model.
- This is a 8SFF model option only.
- This option cannot be ordered when HPE 8SFF Front Remove SPEC Perf FIO (873763-B21) is NOT selected, and Qty=2 of following options are selected : HPE DL300 Gen10 Plus 8SFF SAS/SATA Basic Carrier Drive Cage Kit (P26930-B21), HPE DL300 Gen10 Plus 8SFF NVMe U.3 Premium Basic Carrier Drive Cage Kit (P26931-B21), HPE DL300 Gen10 Plus 8SFF NVMe U.3 Basic Basic Carrier Drive Cage Kit (P27194-B21), HPE DL300 Gen10 Plus 8SFF NVMe U.2 Premium Basic Carrier Drive Cage Kit (P26932-B21)
- When HPE Universal SATA 6G AIC HHHL M.2 SSD Enablement Kit (878783-B21) is selected as well, no optical drive device can be supported.

Core Options

HPE Storage Options

Emulex Fibre Channel HBAs

HPE SN1200E 16Gb Single Port Fibre Channel Host Bus Adapter	Q0L13A
HPE SN1200E 16Gb Dual Port Fibre Channel Host Bus Adapter	Q0L14A
HPE SN1600E 32Gb Dual Port Fibre Channel Host Bus Adapter	Q0L12A
HPE SN1610E 32Gb 1-port Fibre Channel Host Bus Adapter	R2J62A
HPE SN1610E 32Gb 2-port Fibre Channel Host Bus Adapter	R2J63A
HPE SN1700E 64Gb 1-port Fibre Channel Host Bus Adapter	R7N77A
HPE SN1700E 64Gb 2-port Fibre Channel Host Bus Adapter	R7N78A

QLogic Fibre Channel HBAs

HPE SN1100Q 16Gb Single Port Fibre Channel Host Bus Adapter	P9D93A
HPE SN1100Q 16Gb Dual Port Fibre Channel Host Bus Adapter	P9D94A
HPE SN1610Q 32Gb 1-port Fibre Channel Host Bus Adapter	R2E08A
HPE SN1610Q 32Gb 2-port Fibre Channel Host Bus Adapter	R2E09A

NVMe Adapters

HPE DL385 Gen10 Plus 12Gb NVMe 1-port Adapter P25526-B21

Notes:

- This is PCIe re-timer card to support direct attach NVMe.
- Supports two x4 NVMe drives.
- Maximum q'ty of 4 can be supported.
- Cannot be supported in the tertiary slot.

HPE DL385 Gen10 Plus 12Gb NVMe 2-port Adapter P25527-B21

Notes:

- This is PCIe re-timer card to support direct attach NVMe.
- Supports four x4 NVMe drives.
- Maximum q'ty of 4 can be supported.
- Cannot be supported in the tertiary slot.
- Q'ty of two of this kit must be selected if HPE DL385 G10+ v2 24NVMe U.3 Bal FIO Kit (P42085-B21) is selected.
- This card will only be supported on a x16 bus bandwidth PCIe slot.

HPE Smart IO

Requirements:

- One 3yr/4yr/5yr Silver or 3yr/4yr/5yr Platinum license must be purchased for every DSC-25 card in a server.
- 1yr Silver, 1yr Platinum, and 1yr Policy and Services Manager (PSM) licenses are reserved for renewals only.
- One Policy and Services Manager (PSM) license is required to manage up to 3,000 DSC-25 cards.

Pensando Distributed Services Card (DSC)

Pensando Distributed Services Platform DSC-25 Enterprise 10/25Gb 2-port SFP28 Card P26966-B21

Notes: Each card instance requires one RTU license of Silver or Platinum software. In case of more than one adapter, RTU licenses doesn't need to be of the same part number.

Core Options

Pensando DSP Silver Software Licenses

Pensando Distributed Services Platform Enterprise 1-year Renewal Subscription 24x7 Support E-RTU	R6A06AAE
Pensando Distributed Services Platform Enterprise 3-year Subscription 24x7 Support E-RTU	R6A07AAE
Pensando Distributed Services Platform Enterprise 4-year Subscription 24x7 Support E-RTU	R6F68AAE
Pensando Distributed Services Platform Enterprise 5-year Subscription 24x7 Support E-RTU	R6A08AAE

Pensando DSP Platinum Software Licenses

Pensando Distributed Services Platform Enterprise Pro 1-year Renewal Subscription 24x7 Support E-RTU	R6A09AAE
Pensando Distributed Services Platform Enterprise Pro 3-year Subscription 24x7 Support E-RTU	R6A10AAE
Pensando Distributed Services Platform Enterprise Pro 4-year Subscription 24x7 Support E-RTU	R6F69AAE
Pensando Distributed Services Platform Enterprise Pro 5-year Subscription 24x7 Support E-RTU	R6A11AAE

HPE Networking

1 Gigabit Ethernet adapters

Intel I350-T4 Ethernet 1Gb 4-port BASE-T Adapter for HPE	P21106-B21
Broadcom BCM5719 Ethernet 1Gb 4-port BASE-T Adapter for HPE	P51178-B21

10 Gigabit Ethernet adapters

Marvell QL41132HLRJ Ethernet 10Gb 2-port BASE-T Adapter for HPE	P08437-B21
Marvell QL41132HLCU Ethernet 10Gb 2-port SFP+ Adapter for HPE	P21933-B21
Marvell QL41134HLCU Ethernet 10Gb 4-port SFP+ Adapter for HPE	P10094-B21
Broadcom BCM57416 Ethernet 10Gb 2-port BASE-T Adapter for HPE	P26253-B21
Broadcom BCM57412 Ethernet 10Gb 2-port SFP+ Adapter for HPE	P26259-B21
Intel X710-DA2 Ethernet 10Gb 2-port SFP+ Adapter for HPE	P28787-B21

10/25 Gigabit Ethernet adapters

Mellanox MCX512F-ACHT Ethernet 10/25Gb 2-port SFP28 Adapter for HPE	P13188-B21
Mellanox MCX631102AS-ADAT Ethernet 10/25Gb 2-port SFP28 Adapter for HPE	P42044-B21
Xilinx X2522-25G-PLUS Ethernet 10/25Gb 2-port SFP28 Adapter for HPE	P21109-B21
Marvell QL41232HLCU Ethernet 10/25Gb 2-port SFP28 Adapter for HPE	P22702-B21
Broadcom BCM57414 Ethernet 10/25Gb 2-port SFP28 Adapter for HPE	P26262-B21
Intel E810-XXVDA2 Ethernet 10/25Gb 2-port SFP28 Adapter for HPE	P08443-B21
Intel E810-XXVDA4 Ethernet 10/25Gb 4-port SFP28 Adapter for HPE	P08458-B21

100/200/400 Gigabit Ethernet adapters

HPE NV60100M 100Gb 2-port Storage Offload Adapter	R8M41A
Intel E810-CQDA2 Ethernet 100Gb 2-port QSFP28 Adapter for HPE	P21112-B21
HPE 100Gb 1-port OP101 QSFP28 x16 PCIe Gen3 with Intel Omni-Path Architecture Adapter	829335-B21
HPE Ethernet 100Gb 1-port QSFP28 PCIe3 x16 MCX515A-CCAT Adapter	P31246-B21
Mellanox MCX623106AS-CDAT Ethernet 100Gb 2-port QSFP56 Adapter for HPE	P25960-B21
Mellanox MCX623105AS-VDAT Ethernet 200Gb 1-port QSFP56 Adapter for HPE	P10180-B21
HPE Slingshot SA210S Ethernet 200Gb 1-port PCIe NIC	R4K46A
HPE Slingshot 200Gb 1-port PCIe Adapter	R4K46B

Notes:

- 4-port adapters go only into Slot 1.
- A minimum of two Gigabytes (2 GB) of server memory is required per each adapter.
- Direct Attach Cable (DAC) for copper environments or fiber transceivers and cables for fiber-optic environments must be purchased separately. Please see the related NIC QuickSpecs for Technical Specifications and additional information:
  https://h20195.www2.hpe.com/v2/getpdf.aspx/A00002507ENW.pdf?

Core Options

Recommended System Ambient Temperature					
System Config	**CPU Power**	**P21112-B21**	**P31246-B21**	**P25960-B21**	**P10180-B21**
24SFF/ 8LFF	<= 240W	25C	25C	25C	23C
16SFF	<= 240W	30C	30C	30C	30C
8SFF	<= 240W	30C	30C	30C	30C
24SFF/ 8LFF	240W < CPU <=280W	20C	20C	20C	18C
16SFF	240W < CPU <=280W	25C	25C	25C	25C
8SFF	240W < CPU <=280W	25C	25C	25C	25C

Other Restrictions

1. These cards are not supported with 12LFF CTO config.
2. These cards are not supported with mid-tray drive cages for both LFF/SFF chassis.
3. Required to use Max Performance Fan Kit
4. Only supported on 1/4/5 PCIe slots
5. SAS4 drives should be treated as NVMe

Notes: When supported with AOC (Active Optical Cables), ambient temperature will follow below restrictions

Recommended System Ambient Temperature Supported with AOC Cables					
System Config	**CPU Power**	**P21112-B21**	**P31246-B21**	**P25960-B21**	**P10180-B21**
24SFF/ 8LFF	<= 240W	22C	22C	22C	22C
16SFF	<= 240W	27C	27C	27C	27C
8SFF	<= 240W	27C	27C	27C	27C
24SFF/ 8LFF	240W < CPU <=280W	17C	17C	17C	17C
16SFF	240W < CPU <=280W	22C	22C	22C	22C
8SFF	240W < CPU <=280W	22C	22C	22C	22C

Other Restrictions

1. These cards are not supported with 12LFF CTO config.
2. These cards are not supported with mid-tray drive cages for both LFF/SFF chassis.
3. Required to use Max Performance Fan Kit
4. Only supported on 1/4/5 PCIe slots
5. SAS4 drives should be treated as NVMe

Notes:

- The AOC cables are:
  - P28169-B21 HPE IB HDR 200Gb QSFP56 3m AOC
  - P28169-B22 HPE IB HDR 200Gb QSFP56 5m AOC
  - P28169-B23 HPE IB HDR 200Gb QSFP56 10m AOC
  - P28169-B24 HPE IB HDR 200Gb QSFP56 15m AOC
  - P28169-B25 HPE IB HDR 200Gb QSFP56 20m AOC
  - P28169-B26 HPE IB HDR 200Gb QSFP56 30m AOC

OCP Adapters

Intel I350-T4 Ethernet 1Gb 4-port BASE-T OCP3 Adapter for HPE	P08449-B21
Broadcom BCM5719 Ethernet 1Gb 4-port BASE-T OCP3 Adapter for HPE	P51181-B21
Marvell QL41132HQCU Ethernet 10Gb 2-port SFP+ OCP3 Adapter for HPE	P08452-B21
Marvell QL41132HQRJ Ethernet 10Gb 2-port BASE-T OCP3 Adapter for HPE	P10103-B21
Broadcom BCM57416 Ethernet 10Gb 2-port BASE-T OCP3 Adapter for HPE	P10097-B21
Broadcom BCM57412 Ethernet 10Gb 2-port SFP+ OCP3 Adapter for HPE	P26256-B21
Intel X710-DA2 Ethernet 10Gb 2-port SFP+ OCP3 Adapter for HPE	P28778-B21
Broadcom BCM57414 Ethernet 10/25Gb 2-port SFP28 OCP3 Adapter for HPE	P10115-B21

Core Options

Mellanox MCX631432AS-ADAI Ethernet 10/25Gb 2-port SFP28 OCP3 Adapter for HPE P42041-B21
Mellanox MCX562A-ACAI Ethernet 10/25Gb 2-port SFP28 OCP3 Adapter for HPE P10112-B21
Notes: When this OCP card is selected, the OCP Upgrade Cable Kit (P14603-B21) must be selected.
Marvell QL41232HQCU Ethernet 10/25Gb 2-port SFP28 OCP3 Adapter for HPE P10118-B21
Notes:
- OCP adapters do not consume PCIe slot.
- Only 1 slot is available for OCP adapters.
- Only SFF OCP adapters below 35W can be supported

Intel E810-XXVDA2 Ethernet 10/25Gb 2-port SFP28 OCP3 Adapter for HPE P10106-B21
Intel E810-CQDA2 Ethernet 100Gb 2-port QSFP28 OCP3 Adapter for HPE P22767-B21
Notes: When this OCP card is selected, the OCP Upgrade Cable Kit (P14603-B21) must be selected.
HPE DL385 Gen10 Plus OCP Upgrade Cable Kit P14603-B21

Recommended System Ambient Temperature		
System Config	**Memory DIMM Capacity**	**P22767-B21**
8LFF (SAS/SATA)	<= 64GB	20C
16SFF (SAS/SATA)	<= 64GB	25C
8SFF (SAS/SATA)	<= 64GB	25C
8SFF (NVMe)	<= 64GB	20C
16SFF (SAS/SATA)	<= 128GB	20C
8SFF (SAS/SATA)	<= 128GB	20C

Other Restrictions

1. These cards are not supported with 12LFF/24SFF CTO config.
2. These cards are not supported with mid-tray drive cages for both LFF/SFF chassis.
3. Required to use Max Performance Fan Kit
4. Not supported with memory DIMMs higher than 128GB
5. Not supported with CPUs higher than 240W
6. SAS4 drives should be treated as NVMe

HPE InfiniBand

HPE InfiniBand HDR/Ethernet 200Gb 1-port QSFP56 PCIe4 x16 OCP3 MCX653435A-HDAI Adapter P31323-B21
HPE InfiniBand HDR/Ethernet 200Gb 2-port QSFP56 PCIe4 x16 OCP3 MCX653436A-HDAI Adapter P31348-B21
Notes: When either one of these two OCP cards are selected, the OCP Upgrade Cable Kit (P14603-B21) must be selected.

Recommended System Ambient Temperature			
System Config	**Memory DIMM Capacity**	**P31323-B21 (Loma)**	**P31348-B21 (Loma)**
8LFF (SAS/SATA)	<= 64GB	20C	20C
16SFF (SAS/SATA)	<= 64GB	25C	25C
8SFF (SAS/SATA)	<= 64GB	25C	25C
8SFF (NVMe)	<= 64GB	20C	20C
16SFF (SAS/SATA)	<= 128GB	20C	20C
8SFF (SAS/SATA)	<= 128GB	20C	20C

Other Restrictions

1. These cards are not supported with 12LFF/24SFF CTO config.
2. These cards are not supported with mid-tray drive cages for both LFF/SFF chassis.
3. Required to use Max Performance Fan Kit
4. Not supported with memory DIMMs higher than 128GB
5. Not supported with CPUs more than 240W
6. SAS4 drives should be treated as NVMe

Core Options

HPE InfiniBand NDR200 1-port OSFP PCIe5 x16 MCX75310AAS-HEAT Adapter P45642-B21

Notes: This NIC card option currently only supports copper cables on DL385 Gen10 Plus v2. No optical cable is supported yet

HPE InfiniBand HDR/Ethernet 200Gb 1-port QSFP56 PCIe4 x16 MCX653105A-HDAT Adapter P23664-B21

HPE InfiniBand HDR/Ethernet 200Gb 2-port QSFP56 PCIe4 x16 MCX653106A-HDAT Adapter P31324-B21

HPE InfiniBand HDR100/Ethernet 100Gb 1-port QSFP56 PCIe4 x16 MCX653105A-ECAT Adapter P23665-B21

HPE InfiniBand HDR100/Ethernet 100Gb 2-port QSFP56 PCIe4 x16 MCX653106A-ECAT Adapter P23666-B21

Recommended System Ambient Temperature

System Config	CPU Power	P23664-B21	P31324-B21	P23665-B21	P23666-B21
24SFF/ 8LFF	<= 240W	30C	25C	30C	30C
16SFF	<= 240W	30C	30C	30C	30C
8SFF	<= 240W	30C	30C	30C	30C
24SFF/ 8LFF	240W < CPU <=280W	25C	20C	25C	25C
16SFF	240W < CPU <=280W	25C	25C	25C	25C
8SFF	240W < CPU <=280W	25C	25C	25C	25C

Other Restrictions

1. These cards are not supported with 12LFF CTO config.
2. These cards are not supported with mid-tray drive cages for both LFF/SFF chassis.
3. Required to use Max Performance Fan Kit
4. Only supported on 1/4/5 PCIe slots
5. SAS4 drives should be treated as NVMe

HPE DL38X Gen10 Plus x16/x16 Slot 2/3 Secondary Riser Kit P14590-B21

Notes: Requires selection of a 2nd processor

HPE DL38X Gen10 Plus Slot1 x16 Adder for Slot2/3 Riser Kit P14600-B21

Notes: Required to add additional x16 PCIe Gen4 lanes for Primary/Secondary Riser3

Core Options

HPE Computation and Graphics Accelerator								
Part number	**Card**	**Form Factor**	**QTY per Server**	**CPU Supported**	**Max Ambient Temperature**			
					8/16SFF (SAS/SATA only; no SAS4)	**24SFF (SAS/SATA) or 8SFF/16SFF (NVMe/SAS4)**	**8LFF w/ Power Switch**	**12LFF**
R0W29C	NVIDIA T4 16GB Computational Accelerator for HPE	Single Wide	8	240W or below	35C (>30C may throttle)	35C (>30C may throttle)	35C (>30C may throttle)	25C
R9P49C	NVIDIA A100 80GB PCIe NonCEC Computational Accelerator for HPE	Double Wide	3	280W or below	25C	Not support	25C	Not support
R4W72C	AMD Instinct™ MI100 Accelerator for HPE	Double Wide	3	240W or below	8SFF=>25C 16SFF=> 20C	Not support	20C (Consult with HPE)	Not support
R9Q09A	Qualcomm Cloud AI 100 Accelerator for HPE	Single Wide	8	240W or below	30C (system may throttle above 30C)	30C (system may throttle above 30C)	30C (system may throttle above 30C)	25C
R4B03C	Xilinx Alveo U250 Accelerator for HPE	Double Wide	3	240W or below	25C	Not support	Not support	Not support
R4B02C	Xilinx Alveo U50 Accelerator for HPE	Single Wide	8	240W or below	8SFF=>30C (passive QSFP cable) or 25C (active QSFP cable) 16SFF=> 25C	Not support	Not support	Not support

Core Options

R7E31C	NVIDIA A40 PCIe 48GB Graphics Accelerator for HPE	Double Wide	3	240W or below	25C	Not support	22C	Not support
R9S38C	NVIDIA A30 PCIe 24GB NonCEC Graphics Accelerator for HPE	Double Wide	3	280W or below	35C (>30C may throttle)	25C	35C (>30C may throttle)	25C
R8T26C	NVIDIA A16 PCIe 64GB NonCEC Graphics Accelerator for HPE	Double Wide	3	280W or below	27C	23C	35C (>30C may throttle)	20C (Consult with HPE)

NVIDIA T4 16GB Computational Accelerator for HPE R0W29C

Notes:

- Requires selection of the Max Performance Fan Kit (P14608-B21).
- Requires selection of the High Performance Heat sink (P14610-B21).
- This x16 GPU can only installed in x16 electrical slot

NVIDIA A2 16GB PCIe Non-CEC Accelerator for HPE R9H23C

Notes:

- Requires selection of the Max Performance Fan Kit (P14608-B21).
- Requires selection of the High Performance Heat sink (P14610-B21).
- This option CANNOT be selected with following Mid Trays:
  - HPE DL38X Gen10+ 4LFF SAS/SATA LP Kit (P14503)
  - HPE DL385 G10+ v2 8SFF x4 U.3 BC Kit (P38847-B21)
  - HPE DL385 G10+ v2 8SFF x1 U.3 BC Kit (P39600-B21)
  - HPE DL38X G10+ 4LFF MID UBM2toTrimod Kit (P55517-B21)
- This GPU CANNOT be selected with 12LFF CTO Server
- Certain thermal restrictions will occur when this GPU is selected with SAS4 or NVMe drives on 8SFF or 24SFF CTO Server. Please consult with your HPE reps for more details.

Qualcomm Cloud AI 100 Accelerator for HPE R9Q09A

Notes:

- A máximum of 8 x Qualcomm Cloud AI 100 Accelerators are Supported in a single ProLiant DL385 Gen10 Plus V2
- Qualcomm Cloud AI 100 Accelerators are delivered in separate packaging from the server, and intended to installed at the customer site.
- The Qualcomm Cloud AI 100 Accelerator is a PCIe Gen4, half-height, half-length form factor rated at 75Watt TDP, with up to 16GB of onboard DRAM. – HPE supports the Qualcomm “Standard” edition spec’d at 14 Qualcomm® AI Cores
- Requires selection of the Max Performance Fan Kit (P14608-B21).
- Requires selection of the High Performance Heat sink (P14610-B21).

Core Options

Xilinx Alveo U250 Accelerator for HPE R4B03C

Notes:

- Requires selection of the Max Performance Fan Kit (P14608-B21).
- Requires selection of the High Performance Heat sink (P14610-B21).
- This GPU requires Power Cable Kit (P39101-B21) to be also selected. One Power Cable Kit can support multiple (Max=3) GPUs
- Double wide GPUs can not be installed in the same riser where P14600-B21 is installed. Because the double wide GPU heat sink will extend to the P14600-B21 slot.
- When HPE Universal SATA AIC HHHL M.2 SSD Kit (878783-B21) is selected and since it can only be installed on a primary riser, a secondary riser must be selected to support a DW GPU.
- This x16 GPU can only installed in x16 electrical slot

Xilinx Alveo U50 Accelerator for HPE R4B02C

Notes:

- Requires selection of the Max Performance Fan Kit (P14608-B21).
- Requires selection of the High Performance Heat sink (P14610-B21).
- This x16 GPU can only installed in x16 electrical slot

NVIDIA A100 80GB PCIe Non-CEC Accelerator for HPE R9P49C

Notes:

- Requires selection of the Max Performance Fan Kit (P14608-B21).
- Requires selection of the High Performance Heat sink (P14610-B21).
- This GPU requires Power Cable Kit (P39102-B21) to be also selected. One Power Cable Kit can support multiple (Max=3) GPUs
- Double wide GPUs can not be installed in the same riser where P14600-B21 is installed. Because the double wide GPU heat sink will extend to the P14600-B21 slot.
- When HPE Universal SATA AIC HHHL M.2 SSD Kit (878783-B21) is selected and since it can only be installed on a primary riser, a secondary riser must be selected to support a DW GPU.
- This x16 GPU can only installed in x16 electrical slot

NVIDIA A40 48GB PCIe Non-CEC Accelerator for HPE R9S37C

Notes:

- Requires selection of the Max Performance Fan Kit (P14608-B21).
- Requires selection of the High Performance Heat sink (P14610-B21).
- This GPU requires Power Cable Kit (P39102-B21) to be also selected. One Power Cable Kit can support multiple (Max=3) GPUs
- Double wide GPUs can not be installed in the same riser where P14600-B21 is installed. Because the double wide GPU heat sink will extend to the P14600-B21 slot.
- When HPE Universal SATA AIC HHHL M.2 SSD Kit (878783-B21) is selected and since it can only be installed on a primary riser, a secondary riser must be selected to support a DW GPU.
- This x16 GPU can only installed in x16 electrical slot

NVIDIA A30 PCIe Non-CEC Accelerator for HPE R9S38C

Notes:

- Requires selection of the Max Performance Fan Kit (P14608-B21).
- Requires selection of the High Performance Heat sink (P14610-B21).
- This GPU requires Power Cable Kit (P39102-B21) to be also selected. One Power Cable Kit can support multiple (Max=3) GPUs
- Double wide GPUs can not be installed in the same riser where P14600-B21 is installed. Because the double wide GPU heat sink will extend to the P14600-B21 slot.
- When HPE Universal SATA AIC HHHL M.2 SSD Kit (878783-B21) is selected and since it can only be installed on a primary riser, a secondary riser must be selected to support a DW GPU.
- This x16 GPU can only installed in x16 electrical slot

Core Options

NVIDIA A16 64GB PCIe Non-CEC Accelerator for HPE R8T26C

Notes:

- Requires selection of the Max Performance Fan Kit (P14608-B21).
- Requires selection of the High Performance Heat sink (P14610-B21).
- This GPU requires Power Cable Kit (P39102-B21) to be also selected. One Power Cable Kit can support multiple (Max=3) GPUs
- Double wide GPUs can not be installed in the same riser where P14600-B21 is installed. Because the double wide GPU heat sink will extend to the P14600-B21 slot.
- When HPE Universal SATA AIC HHHL M.2 SSD Kit (878783-B21) is selected and since it can only be installed on a primary riser, a secondary riser must be selected to support a DW GPU.
- This x16 GPU can only installed in x16 electrical slot

HPE Graphic Cable Kits

HPE ProLiant DL300 Gen10 Plus GPU 2x 8-pin Cable Kit P39100-B21

Notes: This Cable Kit is for use with the AMD Instinct™ MI100 Accelerator

HPE ProLiant DL300 Gen10 Plus GPU 8-pin Keyed Cable Kit P39102-B21

Notes: This Cable Kit is for use with the NVIDIA A100 PCIe 40GB Computational Accelerator

HPE Cooling Options

HPE ProLiant DL300 Gen10 Plus 2U Standard Fan Kit P37042-B21

Notes:

- The Standard Fan Kit and the Maximum Performance Fan Kit cannot be selected together
- CPUs with lower than and equal to 155W, need to select this kit

HPE DL38X Gen10 Plus Maximum Performance Fan Kit P14608-B21

Notes:

- This kit is required for specific **Ambient temperature environments,.**
- Max Performance fan kit consists of 6 fans, these will need to replace all the standard fans in the unit, and fill all 6 fan cages.
- The 12 LFF and 24 SFF models (including field upgrades to 24 SFF) will already include 6 Max Performance fan kits.
- The High Performance fan kit is needed to support GPU configurations; or ASHRAE operating environments.
- For elevated ambient temperature support please see: **http://www.hpe.com/servers/ashrae**.

HPE Power Supplies

HPE 500W Flex Slot Platinum Hot Plug Low Halogen Power Supply Kit 865408-B21

Notes: Flex Slot Platinum power supplies support power efficiency of up to 94% and include a standard C-14 power inlet connector.

HPE 800W Flex Slot Titanium Hot Plug Low Halogen Power Supply Kit 865438-B21

Notes: Flex Slot Titanium power supplies support power efficiency of up to 96% and include a standard C-14 power inlet connector.

HPE 800W Flex Slot Platinum Hot Plug Low Halogen Power Supply Kit P38995-B21

Notes: Flex Slot Platinum power supplies support power efficiency of up to 94% and include a standard C-14 power inlet connector.

HPE 800W Flex Slot -48VDC Hot Plug Low Halogen Power Supply Kit 865434-B21

Notes: Flex Slot -48VDC power supplies support power efficiency of up to 94%

HPE 800W Flex Slot Universal Hot Plug Low Halogen Power Supply Kit 865428-B21

HPE 1600W Flex Slot Platinum Hot Plug Low Halogen Power Supply Kit P38997-B21

HPE 1600W Flex Slot -48VDC Hot Plug Power Supply Kit P17023-B21

Notes: Flex Slot -48VDC power supplies support power efficiency of up to 94%

Core Options

HPE 1600W -48VDC Power Cable Lug Kit P36877-B21

Notes:

- P36877-B21 is to be used with HPE 1600W Flex Slot -48VDC Hot Plug Power Supply Kit
- Only one power cable lug kit needs to be selected with the power supply

Notes:

- Flex Slot universal power supplies support power efficiency of up to 94% and support both 277VAC/380VDC power inputs.
- Flex Slot Platinum Plus power supplies support power efficiency of up to 94% and include a C-14 power inlet connector that can support HPE Power Discovery Services (blue connector).
- Prior to making a power supply selection it is highly recommended that the HPE Power Advisor is run to determine the right size power supply for your server configuration. The HPE Power Advisor is located at: **http://www.hpe.com/info/poweradvisor**.
- All power supplies in a server should match. Mixing Power Supplies is not supported.
- Option kits contain the specified power supply and a PDU IEC cable.
- 1600W power supplies only support high line voltage.
- HPE ProLiant servers ship with an IEC-IEC power cord used for rack mounting with Power Distribution Units (PDUs). Visit **HPE power cords** for a full list of optional HPE power cords.

Core Options

Riser Information

Part number	Description	Riser position			Bus width (Gen4 lanes)			NVMe Direct Connect	
		Primary	Secondary	Tertiary	Top slot	Middle Slot	Bottom slot	Ports	Drive count
N/A	This is the default riser in the chassis	D	N	N	x8	x16	x8	0	0
P14587-B21	HPE DL38X Gen10 Plus x8/x16/x8 Secondary Riser Kit	N	O	N	x8	x16	x8	0	0
P14592-B21	HPE DL38X Gen10 Plus x16x16 Slot1/2 Riser FIO Kit	O	N	N	X16	x16	0	0	0
P14589-B21	HPE DL38X Gen10 Plus x16/x16 Slot1/2 Secondary Riser Kit	N	O	N	X16	x16	0	0	0
P14599-B21	HPE DL38X Gen10 Plus x16 x16 Slot2/3 Riser FIO Kit	O	N	N	0	x16	X16	0	0
P14590-B21	HPE DL38X Gen10 Plus x16/x16 Slot2/3 Secondary Riser Kit	N	O	N	0	x16	X16	0	0
P14600-B21	HPE DL38X Gen10 Plus Slot1 x16 Adder for Slot2/3 Riser	O	O	N	x16	0	0	0	0
P14581-B21	HPE DL38X Gen10 Plus x8x8 2x16 TER Rsr Kit	N	N	O	x8	x8	0	0	0
P14588-B21	HPE DL38X Gen10 Plus x16 Tertiary Riser Kit	N	N	O	x16	0	0	0	0
P14575-B21	HPE DL38X Gen10 Plus Primary NEBS-compliant Riser Kit	O	O	N	0	0	0	0	0
P14577-B21	HPE DL38X Gen10 Plus Tertiary NEBS-compliant Riser Kit	N	N	O	0	0	0	0	0
P25902-B21	HPE DL385 Gen10 Plus v2 2SFF NVMe/SAS/SATA Basic Carrier Secondary Riser Cage Kit	N	O	N	0	0	0	1	2
P14579-B21	HPE DL38X Gen10 Plus 2LFF Primary Riser Kit	O	O	N	0	0	0	0	0
P14580-B21	HPE DL38X Gen10 Plus 2LFF Tertiary Riser Kit	N	N	O	0	0	0	0	0

Notes: Y = supported; D = default on Chassis; O = optional; N = not supported or slot/connector not present.

Additional Options

Some options may not be integrated at the factory. To ensure only valid configurations are ordered, Hewlett Packard Enterprise recommends the use of an HPE approved configurator. Contact your local sales representative for additional information.

Embedded Management

HPE iLO Advanced

HPE iLO Advanced Electronic License with 1yr Support on iLO Licensed Features	E6U59ABE
HPE iLO Advanced 1-server License with 1yr Support on iLO Licensed Features	512485-B21
HPE iLO Advanced Flexible Quantity License with 1yr Support on iLO Licensed Features	512486-B21
HPE iLO Advanced AKA Tracking License with 1yr Support on iLO Licensed Features	512487-B21
HPE iLO Advanced Electronic License with 3yr Support on iLO Licensed Features	E6U64ABE
HPE iLO Advanced 1-server License with 3yr Support on iLO Licensed Features	BD505A
HPE iLO Advanced Flexible Quantity License with 3yr Support on iLO Licensed Features	BD506A
HPE iLO Advanced AKA Tracking License with 3yr Support on iLO Licensed Features	BD507A
HPE iLO Common Password FIO Setting	P08040-B21

Software as a Service Management

HPE GreenLake for Compute Ops Management

HPE GreenLake for Compute Ops Management Enhanced 3-year Upfront ProLiant SaaS	R7A11AAE

Additional Options

HPE GreenLake for Compute Ops Management Enhanced 1-year Upfront ProLiant SaaS	R7A10AAE
HPE GreenLake for Compute Ops Management Enhanced 5-year Upfront ProLiant SaaS	R7A12AAE

Notes: For customers purchasing HPE GreenLake for Compute Ops Management, without a hardware purchase or a BTO purchase, use this base SKU within ASQ order:

HPE GreenLake for Compute Ops Management Base SaaS	R6Z73AAE

HPE Converged Infrastructure Management Software

HPE OneView Standard 1yr 9x5 Support Flexible Quantity E-RTU	K6F98AAE
HPE OneView including 3yr 24x7 Support Physical 1-server LTU	E5Y34A
HPE OneView including 3yr 24x7 Support Track 1-server LTU	E5Y36A
HPE OneView including 3yr 24x7 Support Flexible Quantity E-LTU	E5Y35AAE
HPE OneView Upgrade from Insight Management 3yr 24x7 Support 1-server LTU	F6Q91A
HPE OneView w/o iLO including 3yr 24x7 Support 1-server LTU	P8B24A
HPE OneView w/o iLO including 3yr 24x7 Support Track 1-server LTU	P8B25A
HPE OneView w/o iLO including 3yr 24x7 Support 1-server FIO LTU	P8B31A
HPE OneView for ProLiant DL Server including 3yr 24x7 Support FIO Bundle Physical 1-server LTU	E5Y43A
HPE OneView for ProLiant DL Server including 3yr 24x7 Support Bundle Track 1-server LTU	E5Y44A
HPE OneView Upgrade from Insight Management including 3yr 24x7 Support Flexible Quantity E-LTU	E5Y45AAE
HPE OneView w/o iLO including 3yr 24x7 Support Flexible Quantity E-LTU	P8B26AAE

Notes: Licenses ship without media. The HPE OneView Media Kit can be ordered separately, or can be **downloaded**.

Additional Options

HPE Security

HPE Gen10 2U Bezel Kit	867809-B21
HPE Bezel Lock Kit	875519-B21
HPE Gen10 Plus Chassis Intrusion Detection Kit	P14604-B21
HPE Gen10 TPM 1.2 FIO Setting	872108-B21
HPE Trusted Platform Module 2.0 Gen10 Plus Black Rivets Kit	P13771-B21

Notes:

- This is TPM 2.0 for Gen10 plus
- This provides a physical connection from the chassis board and hood and detects any physical intrusion into the chassis, providing security during the entire supply chain process of shipping, receiving, distribution, and operation

HPE Server Platform LDevID FIO Setting	P49803-B21

Notes:

- Directs HPE manufacturing site to create, digitally sign and store a platform certificate on the server.
- Requires HPE Trusted Platform Module (TPM).
- Locally Significant Device Identifier (LDevID) certificates are part of a Zero Trust Architecture. This SKU instructs factory to provision LDevID on HPE iLO.

HPE Server Identity LDevID FIO Setting	P49814-B21

Notes: Locally Significant Device Identifier (LDevID) certificates are part of a Zero Trust Architecture. This SKU instructs factory to provision LDevID on HPE iLO.

HPE Boot Controllers

HPE NS204i-p x2 Lanes NVMe PCIe3 x8 OS Boot Device	P12965-B21

Notes:

- NS204i-p will only be supported in Slot 1 of the primary riser and/or Slot 8 of the tertiary riser
- NS204i-p and Primary Riser HPE DL38X Gen10+ 2x16 Slot 2/3 FIO Kit (P14599-B21) are selected then HPE DL38X Gen10+ Slot1 x16 Slot2/3 Kit (P14600-B21) also must be in the configuration.
- Legacy Mode setting (758959-B21) and NS204i-p cannot be selected together.
- HPE Universal SATA AIC HHHL M.2 SSD Kit (878783-B21) and NS204i-p cannot be selected together.
- When NS204i-p and doublewide GPU are selected together Secondary Riser MUST be selected and doublewide GPU can be maximum of 2.

HPE Smart Array Controllers

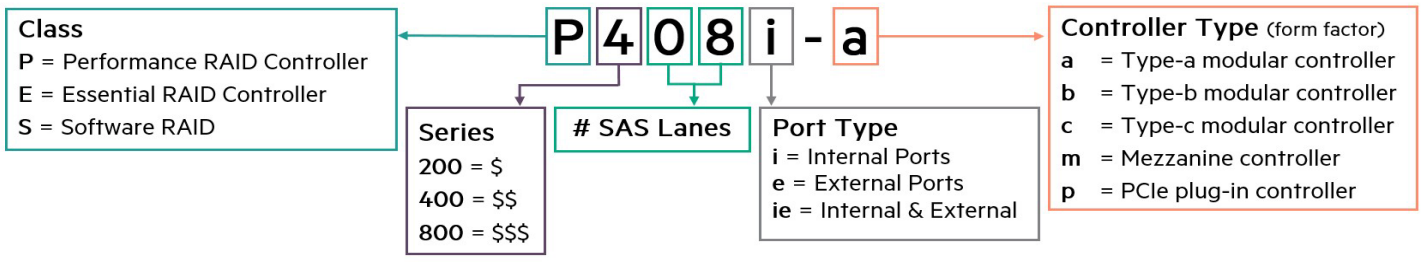

Additional Options

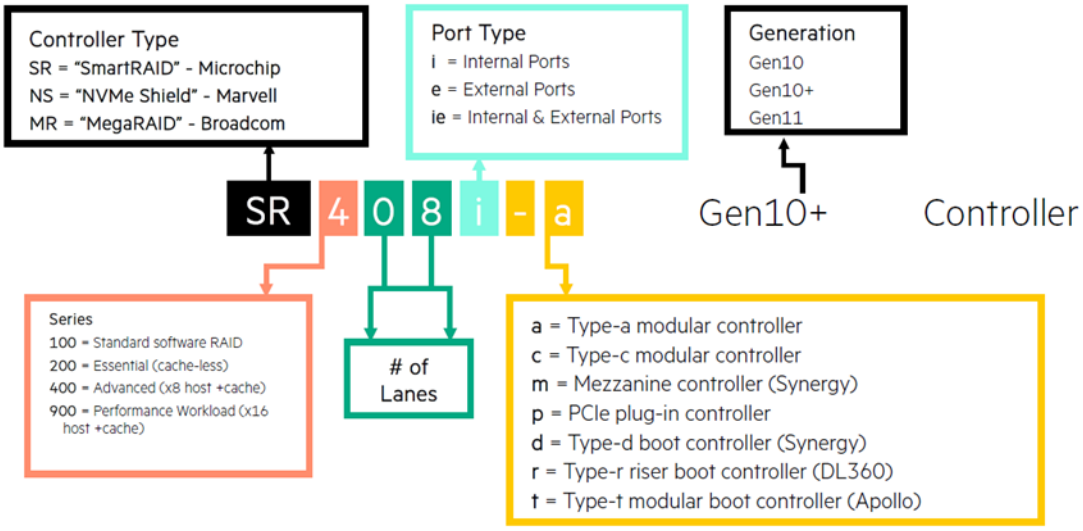

HPE 96W Smart Storage Battery (up to 20 Devices) with 145mm Cable Kit

Notes: All performance RAID controllers are supported by the HPE Smart Storage Battery (P01366-B21), which supports multiple devices and is sold separately.

HPE Smart Array P816i-a SR Gen10 (16 Internal Lanes/4GB Cache/SmartCache) 12G SAS Modular Controller 804338-B21

Notes:

- Does not occupy a PCIe expansion slot and includes SmartCache license.
- The P816i-a cable ships in the 12LFF chassis only.

HPE Smart Array P408i-a SR Gen10 (8 Internal Lanes/2GB Cache) 12G SAS Modular Controller 804331-B21

Notes: Does not occupy a PCIe expansion slot.

HPE Smart Array P408i-p SR Gen10 (8 Internal Lanes/2GB Cache) 12G SAS PCIe Plug-in Controller 830824-B21

HPE Smart Array P408e-p SR Gen10 (8 External Lanes/4GB Cache) 12G SAS PCIe Plug-in Controller 804405-B21

Essential RAID Controllers

HPE Smart Array E208i-p SR Gen10 (8 Internal Lanes/No Cache) 12G SAS PCIe Plug-in Controller 804394-B21

HPE Smart Array E208e-p SR Gen10 (8 External Lanes/No Cache) 12G SAS PCIe Plug-in Controller 804398-B21

HPE Smart Array E208i-a SR Gen10 (8 Internal Lanes/No Cache) 12G SAS Modular Controller 804326-B21

Notes: Does not occupy a PCIe expansion slot.

Tri-mode RAID Controllers

Microchip SmartRAID SR932i-p x32 Lanes 8GB Wide Cache NVMe/SAS 24G Controller for HPE Gen10 Plus P04220-B21

Notes: This card should only be supported on a x16 electrical PCIe slot. For PCIe slot information, refer to the "Expansion Slots" section in this document

Additional Options

Microchip SmartRAID SR416i-a x16 Lanes 4GB Cache NVMe/SAS 24G Controller for HPE Gen10 Plus	P12688-B21
Broadcom MegaRAID MR416i-p x16 Lanes 4GB Cache NVMe/SAS 12G Controller for HPE Gen10 Plus	P06367-B21
Broadcom MegaRAID MR416i-a x16 Lanes 4GB Cache NVMe/SAS 12G Controller for HPE Gen10 Plus	P26279-B21
Broadcom MegaRAID MR216i-p x16 Lanes without Cache NVMe/SAS 12G Controller for HPE Gen10 Plus	P26324-B21
Broadcom MegaRAID MR216i-a x16 Lanes without Cache NVMe/SAS 12G Controller for HPE Gen10 Plus	P26325-B21

Notes:

- When selecting SR RAID controllers for external storage (E208e, 804398-B21) and MR RAID controllers for internal storage(MR216i/MR416i) in the order, please be aware these two products use different RAID configuration tools. HPSSA (HP SR Storage Administrator) is only supported on SR (SmartRAID) controllers. MR (MegaRAID) controllers will support a different tool named MR Storage Adminstrator
- Not supporting mixing of MR (MegaRAID) series internal controllers and SR (SmartRAID) series internal controllers
- MR (MegaRAID) series controllers are not supported with Intelligent Provisioning feature
- For more information on the HPE Gen11 Storage Controller, please refer to:

HPE Compute MR Gen11 Controllers Quick Spec

HPE Compute SR Gen11 Controllers Quick Spec

HPE Cable Options

HPE DL38X Gen10 Plus Rear Serial Cable Kit	P14606-B21
HPE DL38X Gen10 Plus 8NVMe CPU1/2 Cable Kit	P22829-B21

Notes:

- Maximum q'ty =1
- This cable kit can be selected only with respective NVMe bundle SKUs. Refer to NVMe bundle SKU section above in this document

HPE DL38X Gen10 Plus 8NVMe CPU1 Cable Kit	P22834-B21

Notes:

- Maximum q'ty =1
- This cable kit can be selected only with respective NVMe bundle SKUs. Refer to NVMe bundle SKU section above in this document

HPE DL38X Gen10 Plus 16NVMe CPU1/2 Cable Kit	P22835-B21

Notes:

- Maximum q'ty =1
- This cable kit can be selected only with respective NVMe bundle SKUs. Refer to NVMe bundle SKU section above in this document

HPE DL38X Gen10 Plus Mini SAS 3 Position Cable	P14605-B21

Notes:

- Maximum q'ty =1
- This cable kit MUST be selected when HPE DL38X Gen10+ 2SFF x4Tri-Mode U.3 Kit (P26922-B21) is Qty=2

HPE DL385 Gen10 Plus Retimer Card Primary Cable Kit	P25602-B21

Notes: This cable kit can be selected only with respective NVMe bundle SKUs. Refer to NVMe bundle SKU section above in this document

HPE DL385 Gen10 Plus Retimer Card Secondary Cable Kit	P25604-B21

Notes: This cable kit can be selected only with respective NVMe bundle SKUs. Refer to NVMe bundle SKU section above in this document

Additional Options

HPE ProLiant DL300 Gen10 Plus 2U x2 Tri-Mode Cable Kit	P36203-B21

Notes: This cable is to support NVMe U.3/U.2 drive cages with a tri-mode controller, when NVMe configuration is not being built with NVMe bundle SKUs/NVMe direct attach. Refer to OCA for detailed rules.

HPE ProLiant DL300 Gen10 Plus 2U x4 Tri-Mode Cable Kit	P36202-B21

Notes: This cable is to support NVMe U.3/U.2 drive cages with a tri-mode controller, when NVMe configuration is not being built with NVMe bundle SKUs/NVMe direct attach. Refer to OCA for detailed rules.

HPE ProLiant DL38x 8SFF SAS/SATA Tri-Mode Cable Kit	P55467-B21

Notes:

- This cable kit can be supported only with 8SFF or 24SFF CTO Server
- For 8SFF Model, maximum q'ty =1
- For 24SFF Model, maximum q'ty =3
- This cable kit currently does not work with 8LFF or 12LFF CTO models

HPE ProLiant DL38x LFF SAS/SATA Tri-Mode Cable Kit	P58900-B21

Notes:

- This cable kit can be supported only with 8LFF or 12LFF CTO Server
- Maximum q'ty =1

HPE ProLiant DL38x Gen10 Plus 2SFF Rear Tri-Mode Cable Kit	P55471-B21
HPE ProLiant DL38x Gen10 Plus 4LFF SAS/SATA Tri-Mode Cable Kit	P55860-B21

Notes: This cable kit can be used only with 12LFF CTO Server

HPE Disk-Based Backup

HPE RDX External Docking Station	C8S07B
HPE RDX 500GB Removable Disk Cartridge	Q2042A
HPE RDX 1TB Removable Disk Cartridge	Q2044A
HPE RDX 2TB Removable Disk Cartridge	Q2046A
HPE RDX 4TB Removable Disk Cartridge	Q2048A

HPE Racks

- Please see the **HPE Advanced Series Racks QuickSpecs** for information on additional racks options and rack specifications.
- Please see the **HPE Enterprise Series Racks QuickSpecs** for information on additional racks options and rack specifications.
- Please see the **HPE Standard Series Racks QuickSpecs** for information on additional racks options and rack specifications.

HPE Power Distribution Units (PDUs)

- Please see the **HPE Basic Power Distribution Units (PDU) QuickSpecs** for information on these products and their specifications.
- Please see the **HPE Metered Power Distribution Units (PDU) QuickSpecs** for information on these products and their specifications.
- Please see the **HPE Intelligent Power Distribution Unit (PDU) QuickSpecs** for information on these products and their specifications.
- Please see the **HPE Metered and Switched Power Distribution Units (PDU) QuickSpecs** for information on these products and their specifications.

Additional Options

HPE Uninterruptible Power Systems (UPS)

- To learn more, please visit the **HPE Uninterruptible Power Systems (UPS) web page.**
- Please see the **HPE DirectFlow Three Phase Uninterruptible Power System QuickSpecs** for information on these products and their specifications.
- Please see the **HPE Line Interactive Single Phase UPS QuickSpecs** for information on these products and their specifications.

HPE Rack Options

- Please see the **HPE KVM Switches web page** for information on these products and their specifications.

Rail Kits

Notes:

- Easy Install rail kits contain telescoping rails which allow for in-rack serviceability.
- To assist in the installation of the server into the rack an optional installation tool is available by contacting your local services representative (695539-001).
- Hewlett Packard Enterprise recommends that a minimum of two people are required for all Rack Server installations. Please refer to your installation instructions for proper tools and number of people to use for any installation.

Notes: CTO Models do not ship with rail kits, they need to be ordered seperately

HPE DL38X Gen10 Plus 2U SFF Easy Install Rail Kit	P22018-B21

Notes: Supported on SFF Model only

HPE DL38X Gen10 Plus 2U LFF Easy Install Rail Kit	P22019-B21

Notes: Supported on LFF Model only

HPE DL38X Gen10 Plus 2U Cable Management Arm for Rail Kit	P22020-B21

HPE USB and SD Options

HPE Enterprise Mainstream Flash Media Kits for Memory Cards

HPE 32GB microSD RAID 1 USB Boot Drive	P21868-B21

Notes: In vSphere 7.0, VMware made changes that impact the use of an SD Card/USB media as a standalone boot device and will be removing support for them after version 7.x.
SD Card/USB media can still be used as a standalone boot option through all 7.x releases via published Customer Advisory **Usage of SD Card/USB Devices As Standalone Boot Devices Has Changed Due to System Storage Changes For VMware ESXi 7.0 (Or Later).**
For any major release beyond VMware ESXi 7.x, VMware will require M.2 or another local persistent device as the standalone boot option.

HPE Support Services

Installation & Startup Services

HPE Install ProLiant DL38x(p) Service	U4554E
HPE Installation and Startup DL38x(p) Service	U4555E

Tech Care

HPE 3 Year Tech Care Essential Proliant DL385 Gen10 Plus V2 Service	HY5U7E
HPE 3 Year Tech Care Essential wDMR Proliant DL385 Gen10 Plus V2 Service	HY5U8E
HPE 5 Year Tech Care Essential Proliant DL385 Gen10 Plus V2 Service	HY5X1E
HPE 5 Year Tech Care Essential wDMR Proliant DL385 Gen10 Plus V2 Service	HY5X2E

Notes: For a full listing of Support Services available for this server, please visit **http://www.hpe.com/services**.

Memory



General Memory Population Rules and Guidelines:

- Install DIMMs only if the corresponding processor is installed.
- If only one processor is installed in a two-processor system, only half of the DIMM slots are available.
- To maximize performance, it is recommended to balance the total memory capacity between all installed processors.
- When two processors are installed, balance the DIMMs across the two processors.
- White DIMM slots denote the first slot to be populated in a channel.
- The maximum memory speed is a function of the memory type, memory configuration, and processor model.
- The maximum memory capacity is a function of the number of DIMM slots on the platform, the largest DIMM capacity qualified on the platform, the number and model of installed processors qualified on the platform.
- For details on the HPE Server Memory Options Population Rules, visit: **https://www.hpe.com/docs/amd-population-rules-Gen10plus**
- To realize the performance memory capabilities listed in this document, HPE DDR4 Smart Memory is required. For additional information, please see the: **HPE DDR4 Smart Memory QuickSpecs**
- For details on the HPE Server Memory speed, visit: **http://www.hpe.com/docs/amd-speed-tables**

Storage

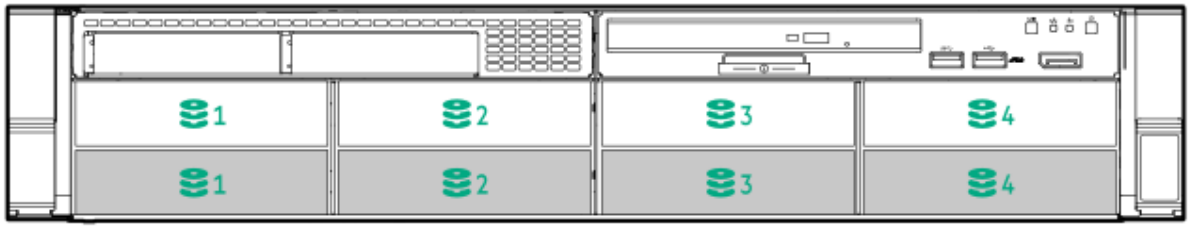

8LFF chassis with Universal media bay and optional 2SFF and optical drive shown

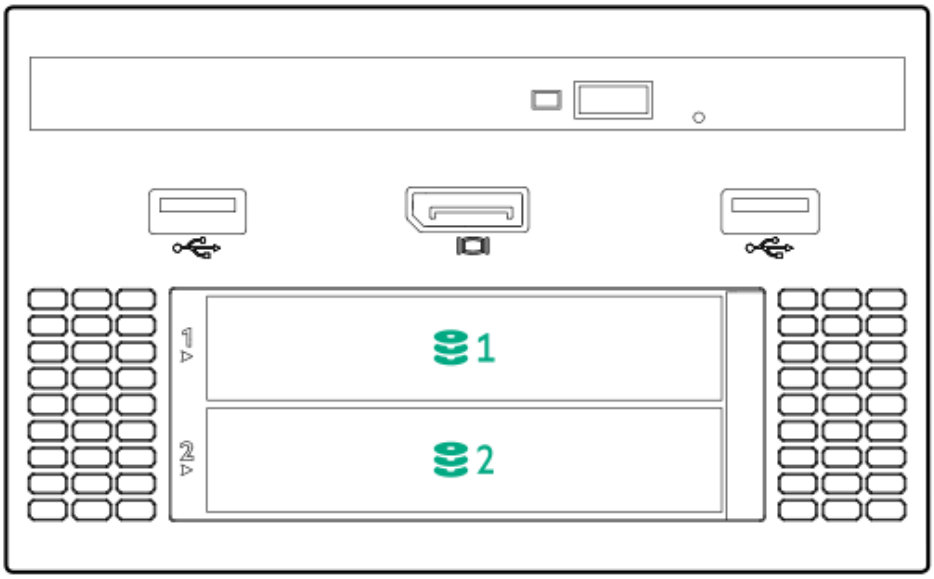

Universal Media Bay

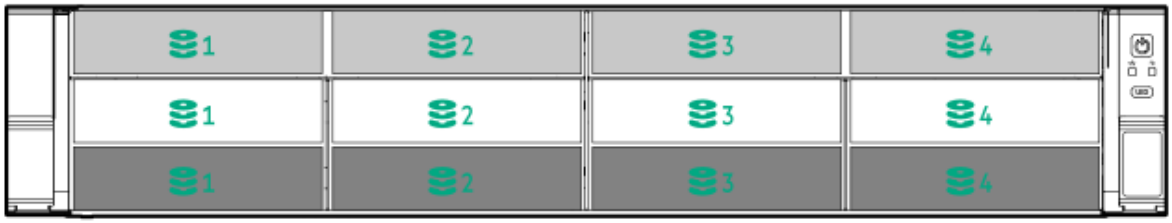

12LFF Front Panel

Storage

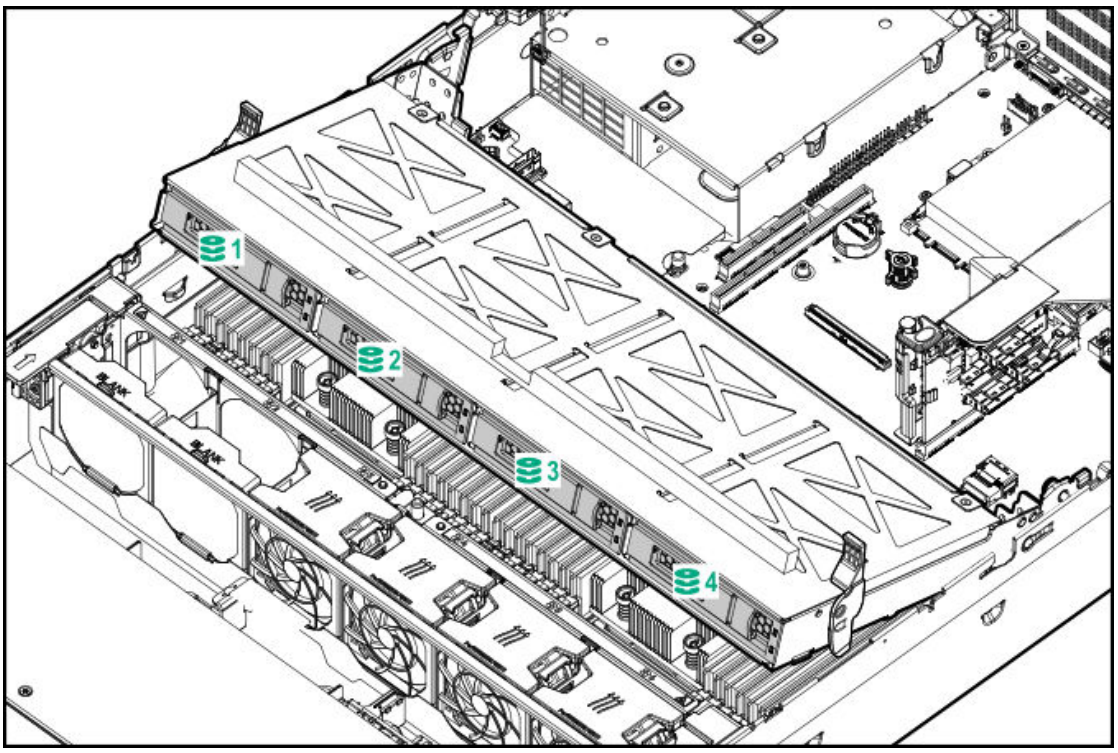

Midplane Box (LFF)

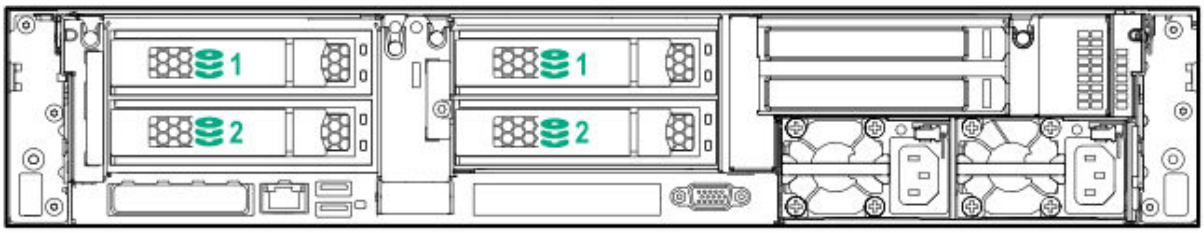

Rear Panel 2x 2LFF



Storage

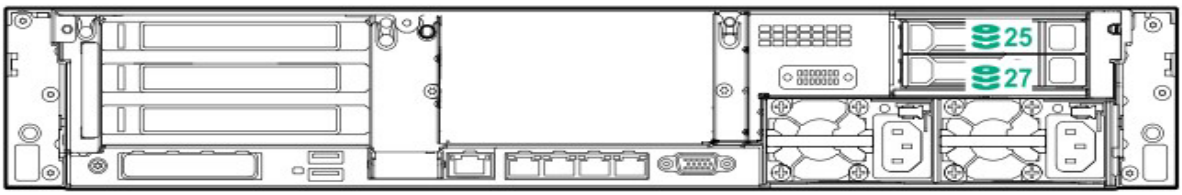

24 SFF Chassis + rear 2 SFF drives

Technical Specifications

System Unit

Dimensions

- **SFF Drives**
  8.75 x 44.54 x 71.2 cm 3.44 x 17.54 x 28 in
- **LFF Drives**
  8.75 x 44.54 x 74.9 cm 3.44 x 17.54 x 29.5 in

Weight (approximate)

- **Minimum**
  15.1 kg / 33.25 lbs with 1 hard drive
  - **Maximum** 19.7 kg / 43.50 lbs with 24 hard drives
  - **Minimum** 8 SFF chassis with 1x SFF HDD and 7 HDD blanks, 2x Drive Bay blanks, 1x processor including standard heat sink, 1x power supply (plus blank), 1x Smart Array, 1x Riser installed, cables for the above)
- **Maximum**
  24.7 kg / 54.5 lbs with 12 hard drives
  - **Minimum** 17.3 kg / 38.25 lbs with 1 hard drive
  - **Maximum** 12 LFF hard drives (no rear drives), 2x processors, 2x power supplies, 1x Smart Array, 2x Risers installed)

Input Requirements (per power supply)

Rated Line Voltage

- 100 to 120 VAC
- 200 to 240 VAC

BTU Rating

Maximum

- For 1600W Power Supply: 5918 BTU/hr (at 200 VAC), 5884 BTU/hr (at 240 VAC) for China
- For 800W Power Supply: 3207 BTU/hr (at 100 VAC), 3071 BTU/hr (at 200 VAC), 3112 BTU/hr (at 240 VAC) for China Only
- For 500W Power Supply: 1979 BTU/hr (at 100 VAC), 1911 BTU/hr (at 200 VAC), 1965 BTU/hr (at 240 VAC) for China Only

---

Power Supply Output (per power supply)

Rated Steady-State Power

- For 1400W Power Supply: 1400W (at 240 VAC), 1400W (at 240 VAC)
- For 800W Power Supply: 800W (at 100 VAC), 800W (at 240 VAC), 800W (at 240 VAC) input for China only
- For 500W Power Supply: 500W (at 100 VAC), 500W (at 240 VAC), 500W (at 240 VAC) input for China only

Maximum Peak Power

- For 1400W Power Supply: 1400W (at 200 to 240 1VAC), 1400W (at 240 VAC) input for China only
- For 800W Power Supply: 800W (at 100 to 127 VAC), 800W (at 200 to 240 1VAC), 800W (at 240 VAC) input for China only
- For 500W Power Supply: 500W (at 100 to 127 VAC), 500W (at 200 to 240 VAC), 500W (at 240 VAC) input for China only

---

Technical Specifications

System Inlet Temperature

- **Standard Operating Temperature**
  10° to 35°C (50° to 95°F) at sea level with an altitude derating of 1.0°C per every 305 m (1.8°F per every 1000 ft) above sea level to a maximum of 3050 m (10,000 ft), no direct sustained sunlight. Maximum rate of change is 20°C/hr (36°F/hr). The upper limit and rate of change may be limited by the type and number of options installed.

  System performance during standard operating support may be reduced if operating with a fan fault or above 30°C (86°F).
- **Extended Ambient Operating Temperature**
  For approved hardware configurations, the supported system inlet range is extended to be: 5° to 10°C (41° to 50°F) and 35° to 40°C (95° to 104°F) at sea level with an altitude derating of 1.0°C per every 175 m (1.8°F per every 574 ft) above 900 m (2953 ft) to a maximum of 3050 m (10,000 ft). The approved hardware configurations for this system are listed at the URL:**http://www.hpe.com/servers/ashrae**

  For approved hardware configurations, the supported system inlet range is extended to be: 40° to 45°C (104° to 113°F) at sea level with an altitude derating of 1.0°C per every 125 m (1.8°F per every 410 ft) above 900 m (2953 ft) to a maximum of 3050 m (10,000 ft). The approved hardware configurations for this system are listed at the URL:**http://www.hpe.com/servers/ashrae**

  System performance may be reduced if operating in the extended ambient operating range or with a fan fault.
- **Non-operating**
  -30° to 60°C (-22° to 140°F). Maximum rate of change is 20°C/hr (36°F/hr).

Relative Humidity

- **Operating**
  8% to 90% - Relative humidity (Rh), 28°C maximum wet bulb temperature, non-condensing.
- **Non-operating** (non-condensing)
  5 to 95% relative humidity (Rh), 38.7°C (101.7°F) maximum wet bulb temperature, non-condensing.

Altitude

- **Operating**
  3050 m (10,000 ft). This value may be limited by the type and number of options installed. Maximum allowable altitude change rate is 457 m/min (1500 ft/min).
- **Non-operating**
  9144 m (30,000 ft). Maximum allowable altitude change rate is 457 m/min (1500 ft/min).

RTC Accuracy

- 50 ppm

Emissions Classification (EMC) – Regulatory Information

To view the regulatory information for your product, view the Safety and Compliance Information for Server, Storage, Power, Networking, and Rack Products, available at the Hewlett Packard Enterprise Support Center:
http://www.hpe.com/support/Safety-Compliance-EnterpriseProducts

HPE Smart Array

For latest information on **HPE Smart Array Gen10 Controllers for HPE ProLiant DL, ML and Apollo Servers** please refer to their QuickSpecs. (E208i-a,E208i-p,E208e-p,P408i-a,P408i-p,P408e-p,P816i-a)

Technical Specifications

Acoustic Noise

Listed are the declared A-Weighted sound power levels (LWAd) and declared average bystander position A-Weighted sound pressure levels (LpAm) when the product is operating in a 23°C ambient environment. Noise emissions were measured in accordance with ISO 7779 (ECMA 74) and declared in accordance with ISO 9296 (ECMA 109). The listed sound levels apply to standard shipping configurations. Additional options may result in increased sound levels. Please have your HPE representative provide information from the HPE EMESC website for further technical details regarding the configurations listed below.

Idle	
LWAd	5.0 B Entry 5.2 B Base 5.7 B Perf
LpAm	32 dBA Entry 34 dBA Base 41 dBA Perf
Operating	
LWAd	5.0 B Entry 5.3 B Base 6.4 B Perf
LpAm	32 dBA Entry 37 dBA Base 48 dBA Perf

Notes:

- Acoustics levels presented here are generated by the test configuration only. Acoustics levels will vary depending on system configuration. Values are subject to change without notification and are for reference only.
- Product conformance to cited product specifications is based on sample (type) testing, evaluation, or assessment. This product or family of products is eligible to bear the appropriate compliance logos and statements.
- The Listed sound levels apply to standard shipping configurations. Additional options may result in increased sound levels.

Environment-friendly Products and Approach - End-of-life Management and Recycling

Hewlett Packard Enterprise offers **end-of-life product return, trade-in, and recycling programs**, in many geographic areas, for our products. Products returned to Hewlett Packard Enterprise will be recycled, recovered or disposed of in a responsible manner.

The EU WEEE directive (2002/95/EC) requires manufacturers to provide treatment information for each product type for use by treatment facilities. This information (product disassembly instructions) is posted on the Hewlett Packard Enterprise web site. These instructions may be used by recyclers and other WEEE treatment facilities as well as Hewlett Packard Enterprise OEM customers who integrate and re-sell Hewlett Packard Enterprise equipment.

Summary of Changes

Date	Version History	Action	Description of Change
11-Sep-2023	Version 21	Changed	Standard Features, Configuration Information, Core Options, and Additional Options sections were updated.
05-Jun-2023	Version 20	Changed	Core Options and Additional Options sections were updated.
01-May-2023	Version 19	Changed	Optional Features and Additional Options sections were updated.
10-Jan-2023	Version 18	Changed	Core Options Section was updated.
05-Dec-2022	Version 17	Changed	Core Options Section was updated.
07-Nov-2022	Version 16	Changed	Optional Features and Additional Options sections were updated. Obsolete SKUs were removed.
06-Sep-2022	Version 15	Changed	Core Options and Configuration Information sections were updated. Obsolete SKUs were removed.
15-Aug-2022	Version 14	Changed	Pre-configured Models, Core Options and Configuration Information sections were updated. Obsolete SKUs were removed.
13-Jun-2022	Version 13	Changed	Core Options section was updated.
16-May-2022	Version 12	Changed	Core Options and Additional Options sections were updated. Obsolete SKUs were removed.
21-Mar-2022	Version 11	Changed	Pre-configured Models section was updated.
13-Dec-2021	Version 10	Changed	Core Options section was updated.
06-Dec-2021	Version 9	Changed	Standard Features, Core Options and Additional Options sections were updated. Obsolete SKUs were removed.
01-Nov-2021	Version 8	Changed	Standard Features, Service and Support, Core Options and Additional Options sections were updated.
04-Oct-2021	Version 7	Changed	Standard Features section was updated.
15-Sep-2021	Version 6	Changed	Overview, Pre-configured Models and Core Options sections were updated.
02-Aug-2021	Version 5	Changed	Standard Features, Configuration Information and Core Options sections were updated.
06-Jul-2021	Version 4	Changed	Standard Features, Configuration Information and Additional Options sections were updated.
07-Jun-2021	Version 3	Changed	Overview, Standard Features, Pre-configured Models, Configuration Information and Core Options sections were updated. Obsolete SKUs were removed.
10-May-2021	Version 2	Changed	Standard Features, Core Options and Additional Options sections were updated.
19-Apr-2021	Version 1	New	New QuickSpecs.

Copyright

Make the right purchase decision.
Contact our presales specialists.

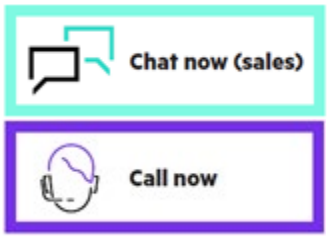

Get updates

© Copyright 2023 Hewlett Packard Enterprise Development LP. The information contained herein is subject to change without notice. The only warranties for Hewlett Packard Enterprise products and services are set forth in the express warranty statements accompanying such products and services. Nothing herein should be construed as constituting an additional warranty. Hewlett Packard Enterprise shall not be liable for technical or editorial errors or omissions contained herein.

AMD® and EPYC® are registered trademarks of Advanced Micro Devices Corporation in the U.S. and other countries.

Microsoft®, Windows®, and Windows Server® are U.S. registered trademarks of the Microsoft group of companies.

Hewlett Packard Enterprise

For hard drives, 1GB = 1 billion bytes. Actual formatted capacity is less

a50002560enw - 16715 - Worldwide - V21 - 11-September-2023