Lenovo ThinkSystem SE350 Edge Server
Product Guide (withdrawn product)

The ThinkSystem SE350 is a purpose-built server that is half the width and significantly shorter than a traditional server, making it ideal for deployment in tight spaces. It can be mounted on a wall, stacked on a shelf or mounted in a rack. The ThinkSystem SE350 puts increased processing power, storage and network closer to where data is generated, allowing actions resulting from the analysis of that data to take place more quickly.

Suggested uses: edge computing (IoT, AI, machine learning), retail, video security, inventory management, building control, telecommunications, manufacturing, distribution



Figure 1. Lenovo ThinkSystem SE350

Did you know?

Customers looking for computing solutions at the edge of their networks often have to compromise -- to use either datacenter-class equipment which is too large and power hungry, or PC based equipment which can't run their enterprise level applications. The ThinkSystem SE350 fits the space between those two extremes. Its compact design, low power usage, and high performance are just the right combination for edge locations. The SE350 can be wall mounted, stacked on a shelf or installed in a rack. It is also designed to operate in rugged environments, up to 55°C.

Key features

The ThinkSystem SE350 is a purpose-built server that is half the width and significantly shorter than a traditional server, making it ideal for deployment in tight spaces. The 3.38 liter case can be mounted on a wall, stacked on a shelf or mounted in a rack.

The ThinkSystem SE350 puts increased processing power, storage and network closer to where data is generated, allowing actions resulting from the analysis of that data to take place more quickly. The server has wired connections up to 10GbE and optionally supports both Wi-Fi and LTE wireless connectivity .

Since these edge servers are typically deployed outside of secure data centers, they include technology that encrypts the data stored on the device if it is tampered with, only enabling authorized users to access it.

Scalability and performance

The SE350 offers numerous features to boost performance, improve scalability and reduce costs:

- Support a single processor from the Intel Xeon D Processor family. Supports processors up to 16 cores, core speeds of up to 2.2 GHz, and TDP ratings of up to 100W.
- Intelligent and adaptive system performance with Intel Turbo Boost Technology 2.0 allows processor cores to run at maximum speeds during peak workloads by temporarily going beyond processor TDP.
- Intel Hyper-Threading Technology boosts performance for multithreaded applications by enabling simultaneous multithreading within each processor core, up to two threads per core.
- Intel Virtualization Technology integrates hardware-level virtualization hooks that allow operating system vendors to better use the hardware for virtualization workloads.
- Support for up to 4 TruDDR4 memory DIMMs an up to 256 GB of memory using 64 GB DIMMs.
- Up to 8 M.2 data drives -- SATA or NVMe -- provide efficient and rugged storage for edge workloads.
- Supports 1 or 2 additional M.2 SATA drives for OS boot and applications, allowing the convenience of separating application code from data.
- The use of NVMe drives increased performance over SATA drives, in terms of throughput, bandwidth, and latency.
- Two 10 GbE SFP+ or 10GBASE-T ports standard for high-speed networking to back-end servers.
- One PCIe 3.0 x16 slot for a GPU or other adapter types provides I/O flexibility as needed.
- Support for the NVIDIA T4 GPU for enhanced workloads at the edge of your network.

Availability and serviceability

The SE350 provides many features to simplify serviceability and increase system uptime:

- Supports remote management, including remote control functions down to the UEFI level (most models) makes managing the edge servers easy even without onsite IT personnel.
- ECC memory and memory RAS features including Single Device Data Correction (SDDC, also known as Chipkill)
- RAID redundancy on SATA drives for greater system uptime.
- Two redundant AC Adapter power supplies and three N+1 redundant fans to provide improved availability.
- LTE wireless connectivity (using the Wireless Network Module) can be used as a backup network in the event that wired connections are offline
- Redundant management ports (using a Wired Network Module) allow you to have redundant wired connections to the server.
- Remote management can be performed by using wireless connectivity
- Built-in XClarity Controller continuously monitors system parameters, triggers alerts, and performs recovery actions in case of failures to minimize downtime.

- Built-in diagnostics in UEFI, using Lenovo XClarity Provisioning Manager, speed up troubleshooting tasks to reduce service time.
- Lenovo XClarity Provisioning Manager collects and saves service data to USB key drive or remote CIFS share folder, for troubleshooting and to reduce service time.
- Auto restart in the event of a loss of AC power
- Support for the XClarity Administrator Mobile app running on a supported smartphone and connected to the server through the service-enabled USB port, enables additional local systems management functions.
- Three-year or one-year customer-replaceable unit and onsite limited warranty, 9 x 5 next business day. Optional service upgrades are available.

Manageability and security

Systems management features simplify local and remote management of the SE350:

- Lenovo XClarity Controller (XCC) monitors server availability and performs remote management. XCC Advanced (standard on most models), which enables remote KVM. Optional XCC Enterprise enables the mounting of remote media files (ISO and IMG image files), boot capture, and power capping.
- Lenovo XClarity Administrator offers comprehensive hardware management tools that help to increase uptime, reduce costs and improve productivity through advanced server management capabilities.
- IT Administrators can securely claim and activate the SE350 remotely through the ThinkShield Key Vault Portal, available on the web. They can also manage and unlock their global IoT edge fleet for initial operation and in case of tamper. The ThinkShield Edge Mobile Management app enables Edge Users to securely claim and activate the ThinkSystem SE350 in an easy to use Web UI.
- New UEFI-based Lenovo XClarity Provisioning Manager, accessible from F1 during boot, provides system inventory information, graphical UEFI Setup, platform update function, RAID Setup wizard, operating system installation function, and diagnostic functions.
- Support for Lenovo XClarity Energy Manager, which captures real-time power and temperature data from the server and provides automated controls to lower energy costs.
- Integrated Trusted Platform Module (TPM) 2.0 support enables advanced cryptographic methods, such as digital signatures and remote attestation.
- Supports Secure Boot to ensure only a digitally signed operating system can be used.
- Industry-standard Advanced Encryption Standard (AES) NI support for faster, stronger encryption.
- Intel Execute Disable Bit functionality can prevent certain classes of malicious buffer overflow attacks when combined with a supported operating system.
- Intel Trusted Execution Technology provides enhanced security through hardware-based resistance to malicious software attacks, allowing an application to run in its own isolated space, protected from all other software running on a system.

Components and connectors

The ports on the front of the SE350 server depend on which network module is installed.

The following figure shows server with the 10Gb SFP+ network module installed. With this network module, the server has a variety of wired connectivity capabilities has two 10Gb SFP+ Ethernet ports, 2 Gigabit Ethernet ports, and 2 ports for management that support either redundancy or daisy-chaining multiple SE350 servers together to reduce cabling requirements on the management LAN.

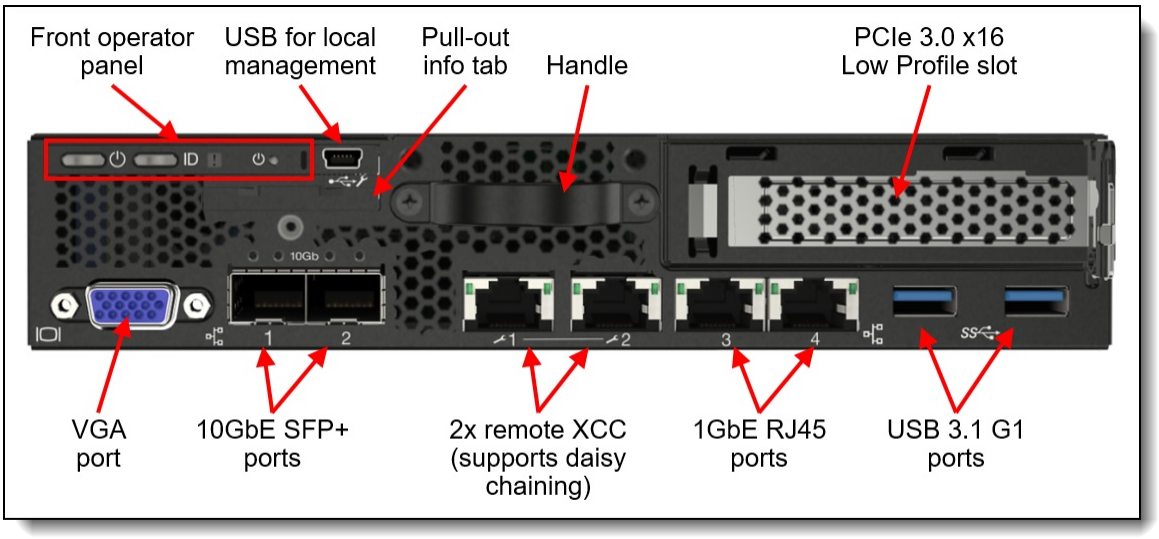

Figure 2. Front view of the Lenovo ThinkSystem SE350 with 10G SFP+ network module

The following figure shows server with the 10GBASE-T network module installed. The connectors are the same as with the 10G SFP+ network module except the two 10G SFP+ ports are replaced with 10GBASE-T ports.

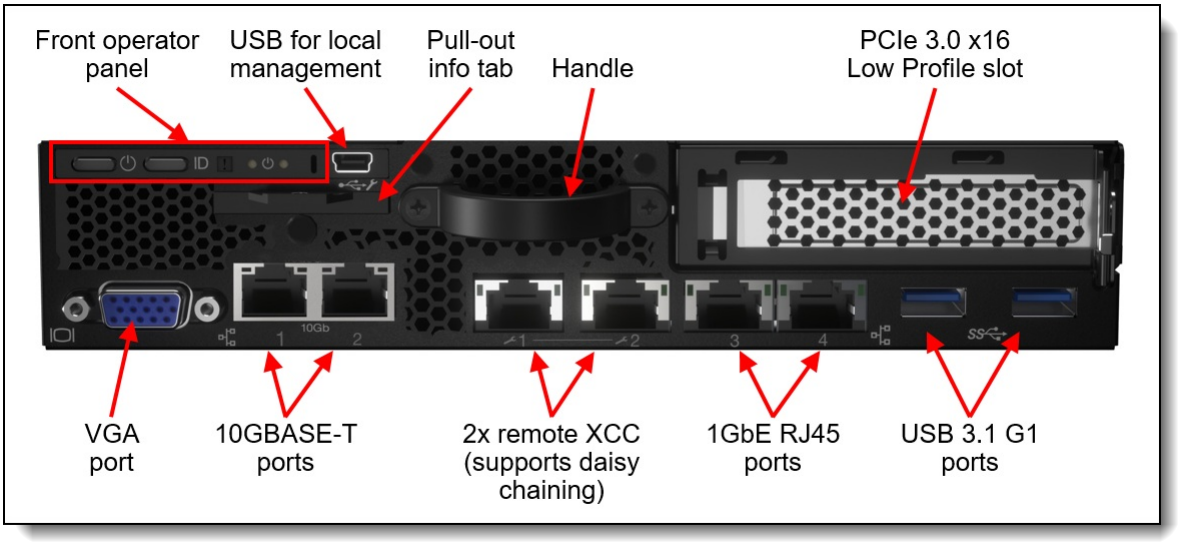

Figure 3. Front view of the Lenovo ThinkSystem SE350 with 10GBASE-T network module

The following figure shows server with the Wireless network module installed. With this network module, the server has a variety of wired and wireless connectivity capabilities including LTE/Wi-Fi wireless connectivity.

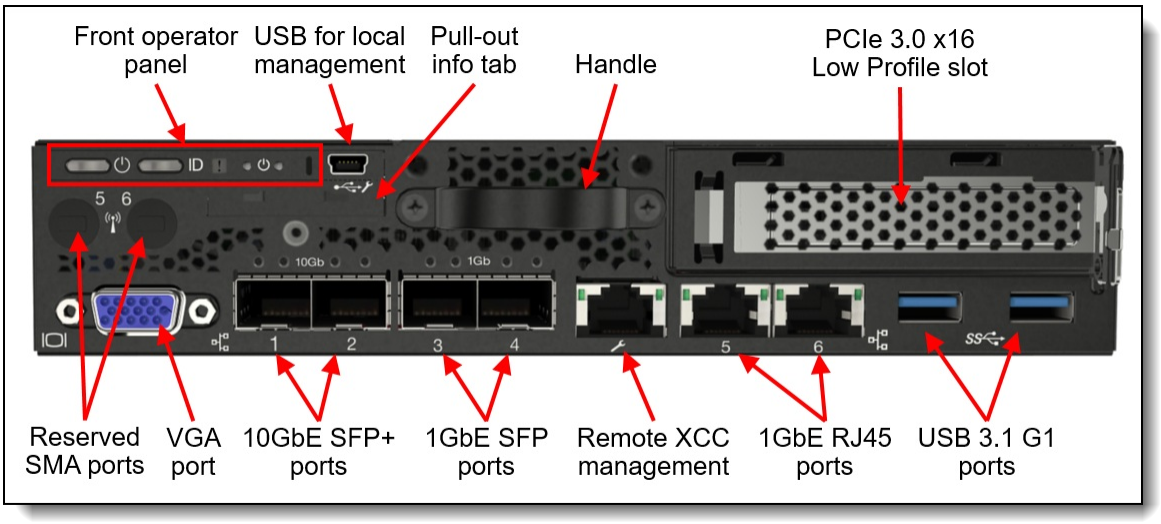

Figure 4. Front view of the Lenovo ThinkSystem SE350 with Wireless network module

The following figure shows the rear of the SE350 server when the Wireless-enabled network module is installed. The servers with wired network modules are the same except that the antennas have been removed.

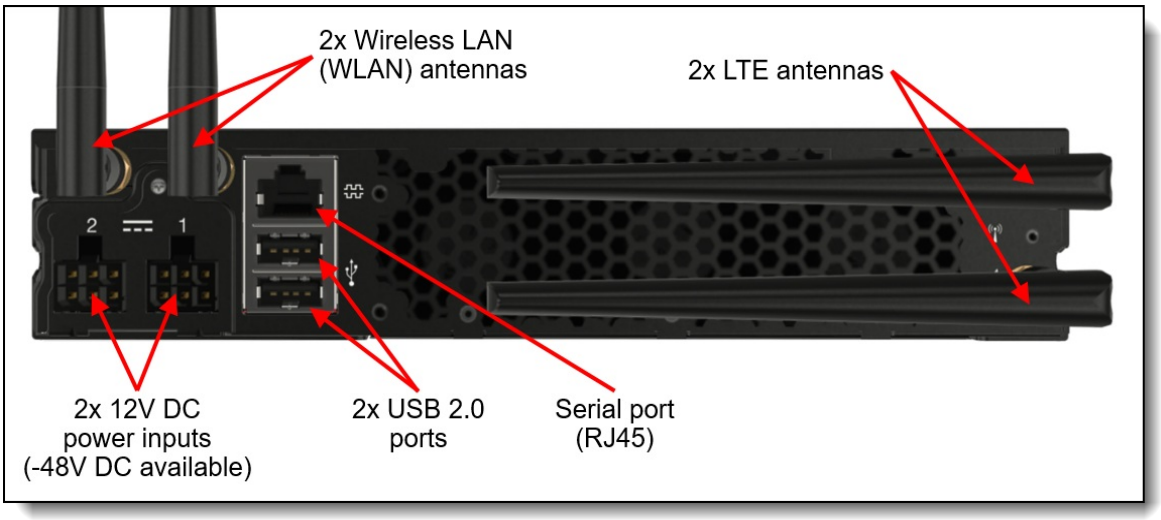

Figure 5. Rear view of the Lenovo ThinkSystem SE350

The following figure shows the locations of key components inside the server. Note that the wireless functionality is now withdrawn.

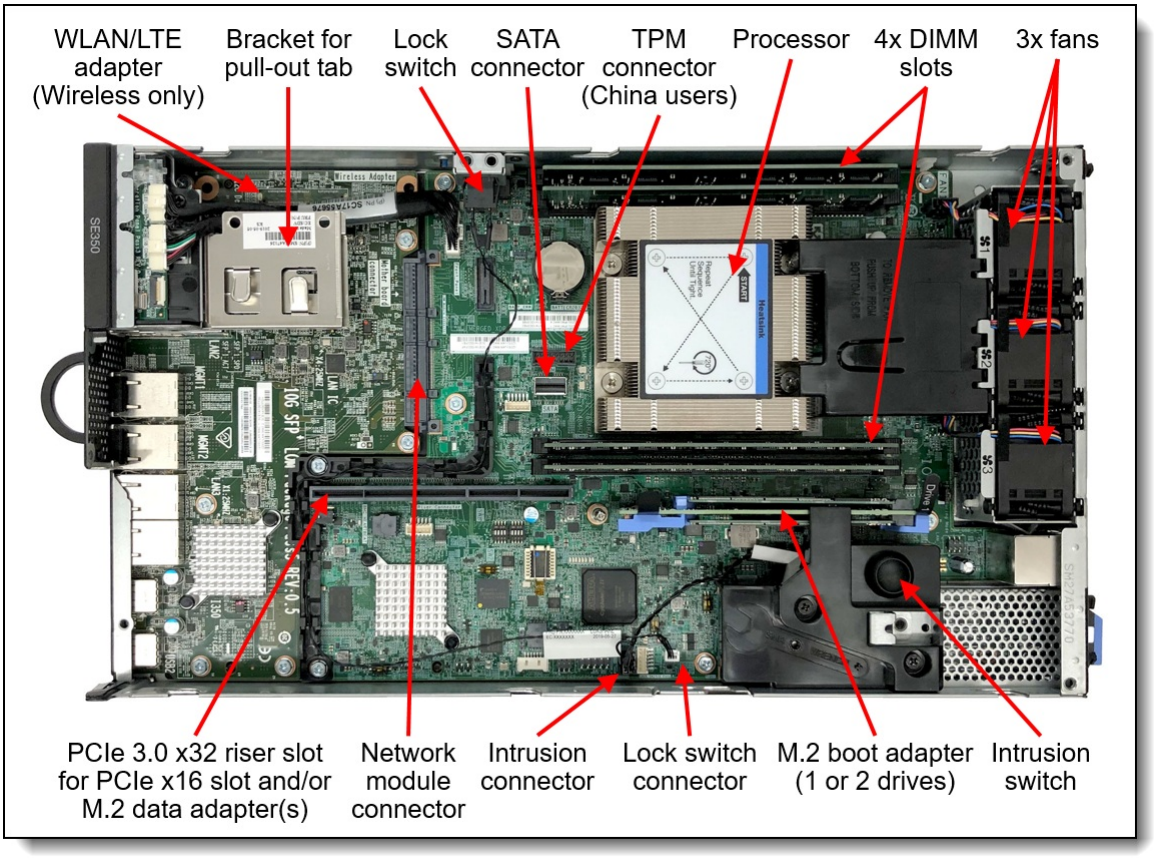

Figure 6. Internal view of the Lenovo ThinkSystem SE350

System architecture

The following figure shows the architectural block diagram of the SE350 system, showing the major components and connections.

Tip: The wrench icons show where the local and remote management functions are enabled

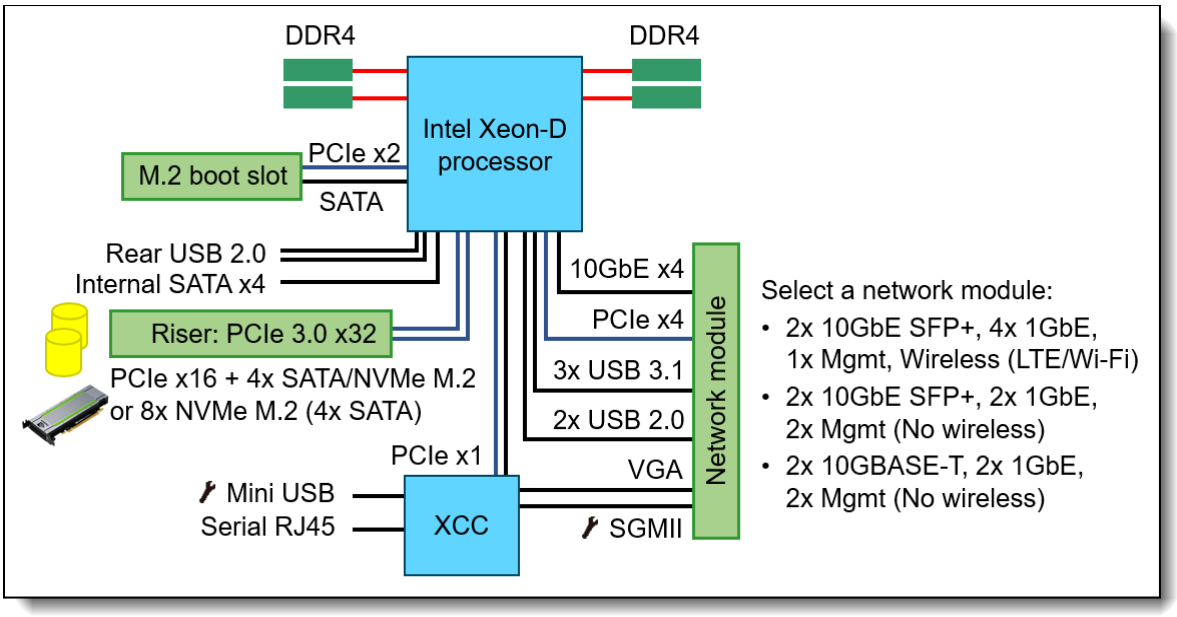

Figure 7. SE350 system board - architectural block diagram

The system board connects to a network module which provides all wired and wireless network connections. Three network modules are offered, one with wireless and two without wireless. The block diagrams are shown in the following figures. All wired connections are at the front of the server. Note that the wireless network module is withdrawn from marketing.

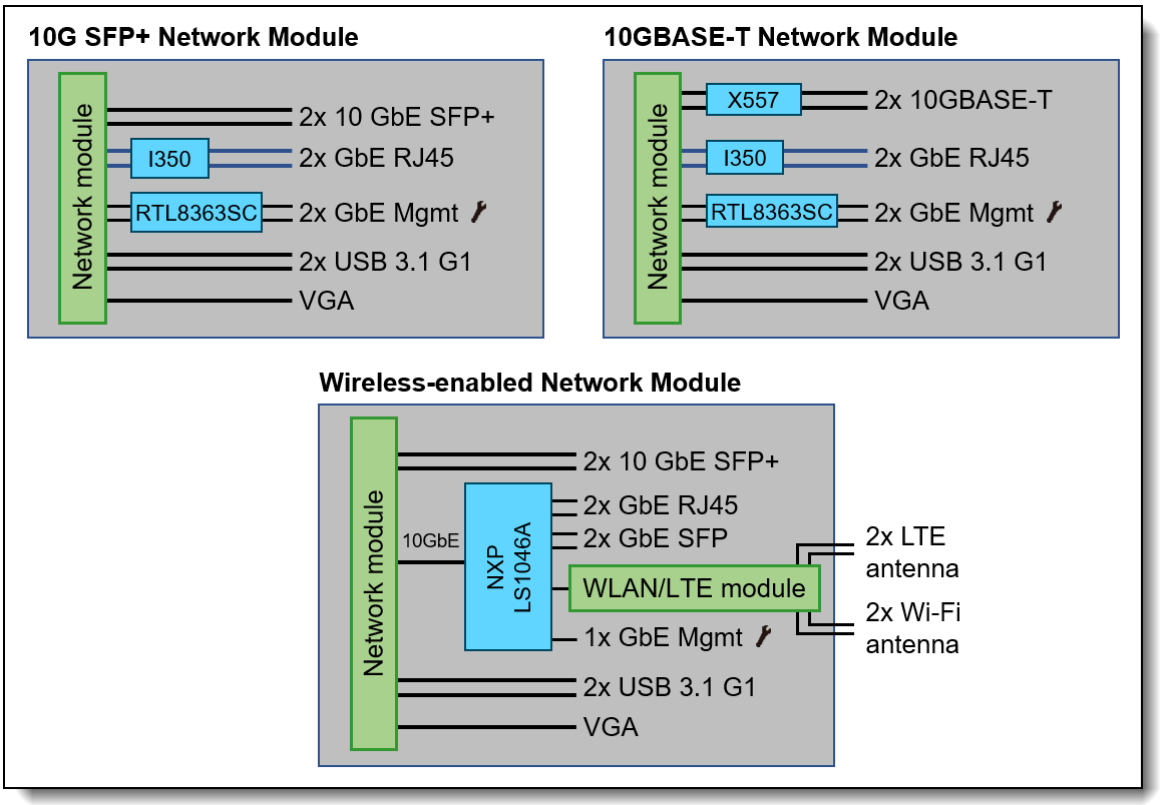

Figure 8. SE350 network modules - architectural block diagrams

Standard specifications

The following table lists the standard specifications.

Table 1. Standard specifications

Components	Specification
Machine types	7Z46 - SE350 - 1 year warranty 7D1X - SE350 - 3 year warranty 7D27 - SE350 - 3 year warranty (India) 7D1R - ThinkSystem E1 and E2 Enclosures - 3 year warranty
Form factor	Edge server, 40mm x 215mm, 1U high.
Processor	One Intel Xeon D-2100 Series processor (formerly codenamed "Skylake D"). Supports processors up to 16 cores, core speeds of up to 2.2 GHz, and TDP ratings of up to 100W. Processor is soldered onto system board.
Memory	4 DIMM slots. The processor has 4 memory channels, with 1 DIMM per channel. Lenovo TruDDR4 DIMMs operating at 2666 MHz. RDIMMs and LRDIMMs are supported
Memory maximum	Up to 256GB with 4x 64GB LRDIMMs
Memory protection	ECC, SDDC (for x4-based memory DIMMs)
Drive bays	Internal storage is implemented using M.2 drives (no 2.5-inch drive bays). Up to 3x M.2 adapters (1x boot adapter, 2x data adapters) can be installed with a total of 10x M.2 drives. • 1x Single M.2 Adapter (1 drive) or 1x Dual M.2 Adapter (2 drives) installed in dedicated slot, for boot • 1x 4-bay PCIe x16 adapter in dedicated bay, for 4x M.2 drives, NVMe or SATA, for data • 1x 4-bay PCIe x16 adapter in PCIe riser slot, for 4x M.2 adapters, NVMe only, for data
Maximum data storage	NVMe drives: 16 TB using 8x 2TB NVMe drives SATA & NVMe drives: 15.68 TB using 4x 1.92 TB SATA drives + 4x 2TB NVMe drives

Storage controller	• Boot drives:
	  ◦ Single-drive adapter: SATA controller of the processor (no RAID)
	  ◦ Dual-drive adapter: Marvell 88SE9230 6 Gbps SATA controller - RAID-0 or RAID-1 (UEFI Boot mode only)
	• Data drives:
	  ◦ SATA/NVMe Adapter: Onboard SATA/NVMe controller supporting RAID 0, 1, 5, 10 (with Intel VROC RAID support)
	  ◦ SATA RAID Adapter: Two Marvell 88SE9230 controllers each connected to two drives; RAID-0 or RAID-1

Components	Specification
Network interfaces	Networking depends the network module selected: • Wireless network module (Wireless enabled LOM package): 802.11ac Wi-Fi and LTE, 2x 10GbE SFP+, 2x 1GbE SFP, 2x 1GbE RJ45 (support 10/100 Mbps), dedicated port for remote management. Port 1 of the 10GbE ports can be shared with the XCC management processor for Wake-on-LAN and NC-SI support. • Wired SFP+ network module (10G SFP+ LOM package): 2x 10GbE SFP+, 2x 1GbE RJ45 (support 10/100 Mbps), 2x dedicated ports for remote management (redundant connections or daisy-chain capable). Port 1 of the 10GbE ports can be shared with the XCC management processor for Wake-on-LAN and NC-SI support. • Wired BASE-T network module (10GBASE-T LOM package): 2x 10GBASE-T RJ45, 2x 1GbE RJ45 (support 10/100 Mbps), 2x dedicated ports for remote management (redundant connections or daisy-chain capable). Port 1 of the 10GbE ports can be shared with the XCC management processor for Wake-on-LAN and NC-SI support. The PCIe 3.0 x16 slot can also be used for an additional network card if desired.
PCI Expansion slots	One PCIe 3.0 x16 slot
Ports	Front: Two USB 3.2 G1 (5 Gb/s) ports, VGA port, One or two dedicated RJ-45 1GbE systems management port (depends on network module selected), dedicated mini-USB port for local systems management including initial activation. Rear: Two USB 2.0 ports, one RJ-45 serial port
Cooling	Three non-hot-swap 40 mm fans (all 3 standard), N+1 redundant in most configurations.
Power supply	Two choices for power input: • 12V DC using one or two external AC power adapters with plugged inputs. Two adapters form a redundant pair in most configurations. Power source is 100-127 V AC (3.2A) or 200-240V AC (1.6A) for each adapter. • -48V DC using a hardwired Telco connection.
Video	G200 graphics with 16 MB memory with 2D hardware accelerator, integrated into XClarity Controller. Maximum resolution is 1920x1200 32bpp at 60Hz.
Systems management	Operator panel with status LEDs. Dedicated ports for local management (mini USB for use with mobile app) and remote management (RJ45 Ethernet ports). Remote management can also be performed from a wireless connection (disabled by default). XClarity Controller embedded management, XClarity Administrator centralized infrastructure delivery, XClarity Integrator plugins, and XClarity Energy Manager centralized server power management. Optional XClarity Controller Advanced to enable remote control functions. ThinkShield Edge Mobile Management mobile app and XClarity Mobile app for local onsite SE350 server management.
Security features	ThinkShield Key Vault Portal web site for security management. Trusted Platform Module, supporting TPM 2.0. In China only, optional Nationz TPM 2.0. Front locking bezel, Kensington cable slot with intelligent lock position switch, G-sensor trigger for motion detection, intrusion detection, self-encrypting drive (SED) support, power-on password, administrator's password.
Operating systems supported	Microsoft Windows Server, Red Hat Enterprise Linux, SUSE Linux Enterprise Server, VMware ESXi. Ubuntu Server certification. See the Operating system support section for specifics.
Mounting options	Horizontal or vertical orientation. Bookshelf mount (3 servers), DIN rail wall mount, ceiling mount, 1U rack mount (2 servers), 2U short-depth rack mount (2 servers). Available locking bezel with dust filter.
Limited warranty	Three-year or one-year (model dependent) customer-replaceable unit and onsite limited warranty with 9x5 next business day (NBD).

Components	Specification
Service and support	Optional service upgrades are available through Lenovo Services: 4-hour or 2-hour response time, 6-hour fix time, 1-year or 2-year warranty extension, software support for Lenovo hardware and some third-party applications.
Dimensions	Height: 43 mm (1.7 in.), width: 209 mm (8.2 in.), depth: 376 mm (14.8 in.)
Volume	3.38 liters
Weight	Maximum: 3.75 kg (8.3 lb)

Models

ThinkEdge SE350 models can be configured by using the Lenovo Data Center Solution Configurator (DCSC).

"For AI" models: The base CTO models listed in the table with "for AI" in the names are the only base models that support high-performance GPUs and accelerators (Controlled GPUs). These models are classified under US Government ECCN regulations and have limited market and customer availability. All other base models do not support high-performance GPUs.

Preconfigured server models may also be available for the SE350, however these are region-specific; that is, each region may define their own server models, and not all server models are available in every region.

The following table lists the base CTO models of the ThinkEdge SE350 server.

Table 2. Base CTO models

Machine Type/Model	Description
7D1XCTO1WW	ThinkSystem SE350 - 3yr Warranty
7D1XCTOAWW	ThinkSystem SE350 - 3yr Warranty for AI
7Z46CTO1WW	ThinkSystem SE350 - 1yr Warranty

India market: For customers in India, use machine type 7D27.

The following table lists the base CTO models of the Enclosures.

Table 3. Base CTO models

Machine Type/Model General purpose	Machine Type/Model for HPC and AI	Description
7D1RCTO1WW	7D1RCTOLWW	ThinkSystem E1 Standard Rack Enclosure - 3 year Warranty
7D1RCTO2WW	None	ThinkSystem E2 Short-Depth Rack Enclosure - 3 year Warranty

The following tables list the available models, grouped by region.

- Models for Australia and New Zealand
- Models for the South East Asia (ASEAN) market
- Models for Brazil
- Models for EMEA
- Models for Hong Kong, Taiwan, Korea (HTK)
- Models for India
- Models for Japan
- Models for the Latin America market (except Brazil)
- Models for USA and Canada

Refer to the Specifications section for information about standard features of the server.

The Tamper column refers to the inclusion of the ThinkSystem SE350 Anti-Tampering Keylock Kit. See the Security section for information. For the Mount column, "Desk" is short for Desktop Mounting (includes Rubber Feet) and "Stack" is short for Stacking Mounting (includes Node Sleeve, Locking Bezel and Dust Filters). See the Mounting options section for details.

Common to all models:

- Power cords, 1 for each power supply
- ThinkSystem SE350 Security Pack is Enabled (see the Security Pack section for details)

Models for Australia and New Zealand

Table 4. Models for Australia and New Zealand

Model	Network module	Intel Xeon-D	Memory	M.2 Data slots*	M.2 Boot slots	PCIe slots	M.2 drives (Data / Boot)	Pwr supp	XCC	Tamper	Mount
TopSeller models with a 3-year warranty (machine type 7D1X)											
7D1XA00ZAU	Wired SFP+	D-2123IT	1x 32GB	4 / 4	Opt	1	2x 480GB A600i SATA Optional (Boot)	1 / 2	Adv	No	Desk
7D1XA00VAU	Wired SFP+	D-2143IT	1x 32GB	4 / 4	Opt	1	2x 480GB A600i SATA Optional (Boot)	1 / 2	Adv	No	Desk
7D1XA012AU	Wired SFP+	D-2183IT	1x 32GB	4 / 4	Opt	1	2x 480GB A600i SATA Optional (Boot)	2 / 2	Adv	No	Desk
7D1XA00LAU	Wireless	D-2123IT	1x 32GB	4 / 4	Opt	1	2x 480GB A600i SATA Optional (Boot)	1 / 2	Adv	No	Desk
7D1XA00NAU	Wireless	D-2143IT	1x 32GB	4 / 4	Opt	1	2x 480GB A600i SATA Optional (Boot)	1 / 2	Adv	No	Desk
7D1XA00RAU	Wireless	D-2183IT	1x 32GB	4 / 4	Opt	1	2x 480GB A600i SATA Optional (Boot)	2 / 2	Adv	No	Desk

* Number of M.2 Data slots standard / maximum. The SE350 supports at most 4 slots if a PCIe slot is configured.

Models for the South East Asia (ASEAN) market

Table 5. Models for the South East Asia (ASEAN) market

Model	Network module	Intel Xeon-D	Memory	M.2 Data slots*	M.2 Boot slots	PCIe slots	M.2 drives (Data / Boot)	Pwr supp	XCC	Tamper	Mount
TopSeller models with a 3-year warranty (machine type 7D1X)											
7D1XA010SG	Wired SFP+	D-2123IT	1x 32GB	4 / 4	Opt	1	2x 480GB A600i SATA Optional (Boot)	1 / 2	Adv	No	Desk
7D1XA00USG	Wired SFP+	D-2143IT	1x 32GB	4 / 4	Opt	1	2x 480GB A600i SATA Optional (Boot)	1 / 2	Adv	No	Desk
7D1XA00PSG	Wired SFP+	D-2183IT	1x 32GB	4 / 4	Opt	1	2x 480GB A600i SATA Optional (Boot)	2 / 2	Adv	No	Desk

* Number of M.2 Data slots standard / maximum. The SE350 supports at most 4 slots if a PCIe slot is configured.

Models for Brazil

Table 6. Models for Brazil

Model	Network module	Intel Xeon-D	Memory	M.2 Data slots*	M.2 Boot slots	PCIe slots	M.2 drives (Data / Boot)	Pwr supp	XCC	Tamper	Mount
Standard models with a 3-year warranty (machine type 7D1X)											
7D1X1003BR	Wired SFP+	D-2123IT	1x 16GB	4 / 4	2	1	1x 480GB 5100 SATA 2x 128GB M.2	2 / 2	Std	No	Desk
7D1X1007BR	Wired SFP+	D-2143IT	1x 32GB	4 / 4	2	1	1x 480GB 5100 SATA 2x 128GB M.2	2 / 2	Std	No	Desk
7D1X100BBR	Wired SFP+	D-2183IT	1x 64GB	4 / 4	2	1	1x 480GB 5100 SATA 2x 128GB M.2	2 / 2	Std	No	Desk

* Number of M.2 Data slots standard / maximum. The SE350 supports at most 4 slots if a PCIe slot is configured.

Models for EMEA

Table 7. Models for EMEA

Model	Network module	Intel Xeon-D	Memory	M.2 Data slots*	M.2 Boot slots	PCIe slots	M.2 drives (Data / Boot)	Pwr supp	XCC	Tamper	Mount
7D1X100HEA	Wired SFP+	D-2143IT	1x 32GB	4 / 4	Opt	1	Open (Data) Optional (Boot)	2 / 2	Ent	No	Desk
7D1XA01BEA	Wired SFP+	D-2143IT	1x 32GB	4 / 4	Opt	1	1x 480GB A600i SED M.2 Optional (Boot)	2 / 2	Ent	Yes	Desk
7D1XA01DEA	Wired SFP+	D-2143IT	1x 32GB	4 / 4	Opt	1	1x 480GB A600i SED M.2 Optional (Boot)	2 / 2	Ent	Yes	Stack
7D1XA02JEA	Wired SFP+	D-2143IT	1x 32GB	4 / 4	Opt	1	Open (Data) Optional (Boot)	2 / 2	Ent	No	Desk
7D1XA02KEA	Wired SFP+	D-2143IT	1x 32GB	4 / 4	Opt	1	Open (Data) Optional (Boot)	2 / 2	Ent	Yes	Desk
7D1XA017EA	Wired SFP+	D-2183IT	2x 32GB	4 / 4	Opt	1	1x 480GB A600i SED M.2 Optional (Boot)	2 / 2	Ent	Yes	Desk
7D1XA01CEA	Wireless	D-2143IT	2x 32GB	4 / 8	2	0	1x 650GB P4511 NVMe SED 2x 480GB A600i SED M.2	2 / 2	Ent	Yes	Desk
7D1XA02MEA	Wired SFP+	D-2183IT	2x 64GB	4 / 8	Opt	0	2x 1.92TB 5300 M.2 Optional (Boot)	2 / 2	Ent	No	Wall
7D1XA02QEA	Wired SFP+	D-2183IT	1x 32GB	4 / 8	Opt	0	Open (Data) Optional (Boot)	2 / 2	Ent	No	Wall

* Number of M.2 Data slots standard / maximum. The SE350 supports at most 4 slots if a PCIe slot is configured.

Models for Hong Kong, Taiwan, Korea (HTK)

Table 8. Models for Hong Kong, Taiwan, Korea (HTK)

Model	Network module	Intel Xeon-D	Memory	M.2 Data slots*	M.2 Boot slots	PCIe slots	M.2 drives (Data / Boot)	Pwr supp	XCC	Tamper	Mount
TopSeller models with a 3-year warranty (machine type 7D1X)											
7D1XA00YCN	Wired SFP+	D-2123IT	1x 32GB	4 / 4	Opt	1	2x 480GB A600i SATA Optional (Boot)	1 / 2	Adv	No	Desk
7D1XA00SCN	Wired SFP+	D-2143IT	1x 32GB	4 / 4	Opt	1	2x 480GB A600i SATA Optional (Boot)	1 / 2	Adv	No	Desk
7D1XA00MCN	Wired SFP+	D-2183IT	1x 32GB	4 / 4	Opt	1	2x 480GB A600i SATA Optional (Boot)	2 / 2	Adv	No	Desk
7D1XA011CN	Wireless	D-2123IT	1x 32GB	4 / 4	Opt	1	2x 480GB A600i SATA Optional (Boot)	1 / 2	Adv	No	Desk
7D1XA00BCN	Wireless	D-2143IT	1x 32GB	4 / 4	Opt	1	2x 480GB A600i SATA Optional (Boot)	1 / 2	Adv	No	Desk
7D1XA007CN	Wireless	D-2183IT	1x 32GB	4 / 4	Opt	1	2x 480GB A600i SATA Optional (Boot)	2 / 2	Adv	No	Desk

* Number of M.2 Data slots standard / maximum. The SE350 supports at most 4 slots if a PCIe slot is configured.

Models for India

Table 9. Models for India

Model	Network module	Intel Xeon-D	Memory	M.2 Data slots*	M.2 Boot slots	PCIe slots	M.2 drives (Data / Boot)	Pwr supp	XCC	Tamper	Mount
TopSeller models with a 3-year warranty (machine type 7D1X)											
7D1XA006SG	Wired SFP+	D-2123IT	1x 32GB	4 / 4	Opt	1	2x 480GB A600i SATA Optional (Boot)	1 / 2	Adv	No	Desk
7D1XA00KSG	Wired SFP+	D-2143IT	1x 32GB	4 / 4	Opt	1	2x 480GB A600i SATA Optional (Boot)	1 / 2	Adv	No	Desk
7D1XA02PSG	Wireless	D-2143IT	1x 32GB	4 / 8 (S&V)	Opt	0	2x 800GB A600i M.2 Optional (Boot)	1 / 2	Std	No	Desk
7D1XA00TSG	Wired SFP+	D-2183IT	1x 32GB	4 / 4	Opt	1	2x 480GB A600i SATA Optional (Boot)	2 / 2	Adv	No	Desk

* Number of M.2 Data slots standard / maximum. The SE350 supports at most 4 slots if a PCIe slot is configured.

Models for Japan

Table 10. Models for Japan

Model	Network module	Intel Xeon-D	Memory	M.2 Data slots*	M.2 Boot slots	PCIe slots	M.2 drives (Data / Boot)	Pwr supp	XCC	Tamper	Mount
TopSeller models with a 3-year warranty (machine type 7D1X)											
7D1XA00AJP	Wired SFP+	D-2123IT	1x 8GB	4 / 4	Opt	1	1x 480GB A600i SATA Optional (Boot)	2 / 2	Adv	No	Desk
7D1XA00EJP	Wired SFP+	D-2143IT	1x 8GB	4 / 4	Opt	1	1x 480GB A600i SATA Optional (Boot)	2 / 2	Adv	No	Desk
7D1XA00QJP	Wired SFP+	D-2183IT	1x 16GB	4 / 4	Opt	1	1x 480GB A600i SATA Optional (Boot)	2 / 2	Adv	No	Desk
7D1XA008JP	Wireless	D-2123IT	1x 8GB	4 / 4	Opt	1	1x 480GB A600i SATA Optional (Boot)	2 / 2	Adv	No	Desk
7D1XA00CJP	Wireless	D-2143IT	1x 8GB	4 / 4	Opt	1	1x 480GB A600i SATA Optional (Boot)	2 / 2	Adv	No	Desk
7D1XA00WJP	Wireless	D-2183IT	1x 16GB	4 / 4	Opt	1	1x 480GB A600i SATA Optional (Boot)	2 / 2	Adv	No	Desk

* Number of M.2 Data slots standard / maximum. The SE350 supports at most 4 slots if a PCIe slot is configured.

Models for the Latin America market (except Brazil)

Table 11. Models for the Latin America market (except Brazil)

Model	Network module	Intel Xeon-D	Memory	M.2 Data slots*	M.2 Boot slots	PCIe slots	M.2 drives (Data / Boot)	Pwr supp	XCC	Tamper	Mount
Standard models with a 3-year warranty (machine type 7D1X)											
7D1X1000LA	Wired SFP+	D-2123IT	1x 16GB	4 / 4	2	1	1x 480GB 5100 SATA 2x 128GB M.2	2 / 2	Std	No	Desk
7D1X1001LA	Wired SFP+	D-2123IT	1x 16GB	4 / 4	2	1	1x 480GB 5100 SATA 2x 128GB M.2	2 / 2	Std	No	Desk
7D1X1002LA	Wired SFP+	D-2123IT	1x 16GB	4 / 4	2	1	1x 480GB 5100 SATA 2x 128GB M.2	2 / 2	Std	No	Desk
7D1X1004LA	Wired SFP+	D-2143IT	1x 32GB	4 / 4	2	1	1x 480GB 5100 SATA 2x 128GB M.2	2 / 2	Std	No	Desk
7D1X1005LA	Wired SFP+	D-2143IT	1x 32GB	4 / 4	2	1	1x 480GB 5100 SATA 2x 128GB M.2	2 / 2	Std	No	Desk
7D1X1006LA	Wired SFP+	D-2143IT	1x 32GB	4 / 4	2	1	1x 480GB 5100 SATA 2x 128GB M.2	2 / 2	Std	No	Desk
7D1X1008LA	Wired SFP+	D-2183IT	1x 64GB	4 / 4	2	1	1x 480GB 5100 SATA 2x 128GB M.2	2 / 2	Std	No	Desk
7D1X1009LA	Wired SFP+	D-2183IT	1x 64GB	4 / 4	2	1	1x 480GB 5100 SATA 2x 128GB M.2	2 / 2	Std	No	Desk
7D1X100ALA	Wired SFP+	D-2183IT	1x 64GB	4 / 4	2	1	1x 480GB 5100 SATA 2x 128GB M.2	2 / 2	Std	No	Desk
7D1X100CLA	Wireless	D-2123IT	1x 16GB	4 / 4	2	1	Open (Data) 2x 480GB A600i SATA	2 / 2	Std	No	Desk
7D1X100DLA	Wireless	D-2143IT	1x 32GB	4 / 4	2	1	Open (Data) 2x 480GB A600i SATA	2 / 2	Std	No	Desk
7D1X100ELA	Wireless	D-2163IT	1x 64GB	4 / 4	2	1	Open (Data) 2x 480GB A600i SATA	2 / 2	Std	No	Desk
7D1X100FLA	Wireless	D-2183IT	1x 64GB	4 / 4	2	1	Open (Data) 2x 480GB A600i SATA	2 / 2	Std	No	Desk

* Number of M.2 Data slots standard / maximum. The SE350 supports at most 4 slots if a PCIe slot is configured.

Models for USA and Canada

Table 12. Models for USA and Canada

Model	Network module	Intel Xeon-D	Memory	M.2 Data slots*	M.2 Boot slots	PCIe slots	M.2 drives (Data / Boot)	Pwr supp	XCC	Tamper	Mount
TopSeller models with a 1-year warranty (machine type 7Z46)											
7Z46A002NA	Wired SFP+	D-2123IT	1x 16GB	4 / 4	Opt	1	1x 480GB 5100 SATA Optional (Boot)	1 / 2	Ent	No	Desk
7Z46A008NA	Wired SFP+	D-2123IT	1x 16GB	Option	Opt	Opt	Open (Data) Optional (Boot)	1 / 2	Ent	No	Desk
7Z46A001NA	Wireless	D-2123IT	1x 16GB	4 / 4	Opt	1	1x 480GB 5100 SATA Optional (Boot)	1 / 2	Ent	No	Desk
7Z46A009NA	Wireless	D-2123IT	1x 16GB	Option	Opt	Opt	Open (Data) Optional (Boot)	1 / 2	Ent	No	Desk
Standard models with a 3-year warranty (machine type 7D1X)											
7D1XA027NA	Wired SFP+	D-2123IT	1x 16GB	Option	Opt	Opt	Open (Data) Optional (Boot)	1 / 2	Ent	No	Desk
7D1XA02DNA	Wired SFP+	D-2143IT	1x 32GB	Option	Opt	Opt	Open (Data) Optional (Boot)	1 / 2	Ent	No	Desk
7D1XA02CNA	Wired SFP+	D-2163IT	1x 32GB	Option	Opt	Opt	Open (Data) Optional (Boot)	1 / 2	Ent	No	Desk
7D1XA02ANA	Wireless	D-2123IT	1x 16GB	Option	Opt	Opt	Open (Data) Optional (Boot)	1 / 2	Ent	No	Desk

* Number of M.2 Data slots standard / maximum. The SE350 supports at most 4 slots if a PCIe slot is configured.

Processors

The SE350 supports processors in the Intel Xeon D-2100 family of processors (formerly codenamed "Skylake D"). The server supports one processor and the processor is soldered on the system board.

The table below lists the supported processors.

All supported processors have the following characteristics:

- Intel Turbo Boost 2.0
- Intel Hyper-Threading Technology
- Intel Virtualization Techology (VT-x, VT-d)
- Intel TSX-NI
- Intel AES New Instructions
- Secure Key
- Intel Memory Protection Extensions (Intel MPX)
- Intel Trusted Execution Technology
- Execute Disable Bit
- Intel OS Guard
- Intel Boot Guard

Part numbers: There are no part numbers for processors because there are no field upgrades supported.

Table 13. Processor options for the SE350

Feature code*	Description
B6ER / B939	ThinkSystem SE350 Edge Server Intel Xeon D-2123IT 4C 60W 2.20 GHz
B6ES / B93A	ThinkSystem SE350 Edge Server Intel Xeon D-2143IT 8C 65W 2.20 GHz

Feature code*	Description
B6EU / B93C	ThinkSystem SE350 Edge Server Intel Xeon D-2163IT 12C 75W 2.10 GHz
B6EV / B93D	ThinkSystem SE350 Edge Server Intel Xeon D-2166NT 12C 85W 2.00 GHz
B6ET / B93B	ThinkSystem SE350 Edge Server Intel Xeon D-2183IT 16C 100W 2.20 GHz

* The second feature code is for CTO orders from NA and LA geographies, and for Brazil

The following table lists the features of the supported processors.

Table 14. Processor specifications

Intel model	Cores / Threads	HT	TB	Base Frequency	Max Boost Frequency	L3 Cache	Memory channels	Memory bus	TDP
D-2123IT	4 / 8	Y	Y	2.20 GHz	3.00 GHz	8 MB	4	2400 MHz	60 W
D-2143IT	8 / 16	Y	Y	2.20 GHz	3.00 GHz	11 MB	4	2133 MHz	65 W
D-2163IT	12 / 24	Y	Y	2.10 GHz	3.00 GHz	17 MB	4	2133 MHz	75 W
D-2166NT	12 / 24	Y	Y	2.00 GHz	3.00 GHz	17 MB	4	2133 MHz	85 W
D-2183IT	16 / 32	Y	Y	2.20 GHz	3.00 GHz	22 MB	4	2400 MHz	100 W

Memory options

The server uses processors with 4 memory channels and supports 1 DIMM per channel, for a total of 4 DIMMs. The server supports up to 256GB of memory using 4x 64 GB LRDIMMs. Memory operates at up to 2400 MHz, depending on the processor selected.

The following table lists the memory options that are available for the server.

Lenovo TruDDR4 memory uses the highest quality components that are sourced from Tier 1 DRAM suppliers and only memory that meets the strict requirements of Lenovo is selected. It is compatibility tested and tuned to maximize performance and reliability. From a service and support standpoint, Lenovo TruDDR4 memory automatically assumes the system warranty, and Lenovo provides service and support worldwide.

Table 15. Supported memory options

Part number	Feature code	Description	Minimum supported	Maximum supported
2666 MHz RDIMMs				
7X77A01301	AUU1	ThinkSystem 8GB TruDDR4 2666 MHz (1Rx8 1.2V) RDIMM	1 or 2*	4
7X77A01303	AUNC	ThinkSystem 16GB TruDDR4 2666 MHz (2Rx8 1.2V) RDIMM	1	4
7X77A01304	AUND	ThinkSystem 32GB TruDDR4 2666 MHz (2Rx4 1.2V) RDIMM	1	4
2666 MHz LRDIMMs				
7X77A01305	AUNE	ThinkSystem 64GB TruDDR4 2666 MHz (4Rx4 1.2V) LRDIMM	1	4
4X77A78614	BNVN	ThinkSystem SE350 64GB TruDDR4 2666 MHz (4Rx4 1.2V) LRDIMM	1	4
3200 MHz RDIMMs				
4X77A85855	BUG8	ThinkSystem SE350 16GB TruDDR4 3200 MHz (2Rx8 1.2V) RDIMM	1	4
4X77A85861	BUG9	ThinkSystem SE350 32GB TruDDR4 3200 MHz (2Rx4 1.2V) RDIMM	1	4

* When the Xeon D-2183IT processor is selected, a minimum of 16 GB (2x 8GB or 1x 16GB) must be installed

The following rules apply when selecting the memory configuration:

- The server supports RDIMMs and LRDIMMs, however RDIMMs and LRDIMMs cannot be mixed.
- Memory labelled as 2666 MHz and memory labelled as 3200 MHz can coexist in the same server.
- Supported DIMMs are labelled for 2666 MHz or 3200 MHz, however the processors used by the server run at a lower speed (2133 MHz or 2400 MHz). As a result, the memory bus operates at the lower speed set by the processor.
- Memory mirroring and memory rank sparing are not supported.
- Recommended installation sequence: 1, 4, 2, 3

The following memory protection technologies are supported:

- ECC detection/correction
- SDDC (for x4-based memory DIMMs; look for "x4" in the DIMM description)

I/O expansion

The SE350 has one PCIe x32 riser slot that accepts a riser that supplies both M.2 data drive adapter and a PCIe slot, depending on the riser selected. The following figure shows the location of the riser cage.

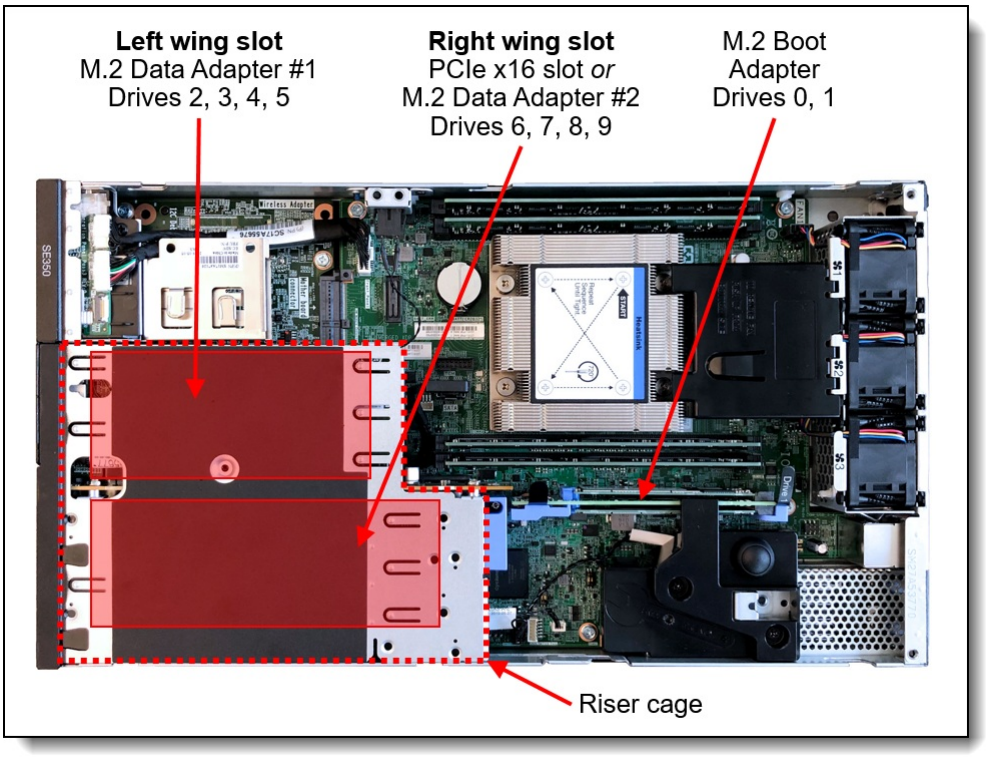

Figure 9. Location of riser cage

The two halves of the riser, referred to as "wings", support an M.2 or PCIe adapter depending on the riser. The left wing is on the left side as viewed from the front of the server. The following table lists the available riser cards. You can also elect to not have a riser card in the server.

Field upgrades: If you order a server without a riser card (using feature code B91F), you can add the riser card later as a field upgrade using the option part numbers listed in the table.

Table 16. SE350 riser card selections

Part number	Feature code	Description
Standard Shock & Vibration		
4M17A60521	B6FD	ThinkSystem SE350 PCIe Riser Cage • Left wing: M.2 4-bay adapter • Right wing: PCIe 3.0 x16 LP slot
4M17A60522	B6FE	ThinkSystem SE350 M.2 Riser Cage Assembly • Left wing: M.2 4-bay adapter • Right wing: M.2 4-bay adapter
Extreme Shock & Vibration (see the Operating environment section)		
CTO only	BAGF	ThinkSystem SE350 PCIe Riser Cage (Extreme Shock & Vibe) • Left wing: M.2 4-bay adapter • Right wing: PCIe 3.0 x16 LP slot
CTO only	BAGG	ThinkSystem SE350 M.2 Riser Cage Assembly (Extreme Shock & Vibe) • Left wing: M.2 4-bay adapter • Right wing: M.2 4-bay adapter
No Riser		
CTO only	B91F	No Riser Cage ASM • Derives the ThinkSystem SE350 Riser Cage Filler, B6FJ • No riser card and no M.2 data adapters • M.2 boot adapter is still selectable

The PCIe Riser Cage, when viewed from the underside, is shown in the following figure. The figure shows an M.2 SATA/NVMe adapter installed in the left wing and an NVIDIA T4 GPU installed in the right wing. The left wing supports SATA or NVMe M.2 drives and the right wing offers a PCIe 3.0 x16 Low Profile slot for supported adapters.

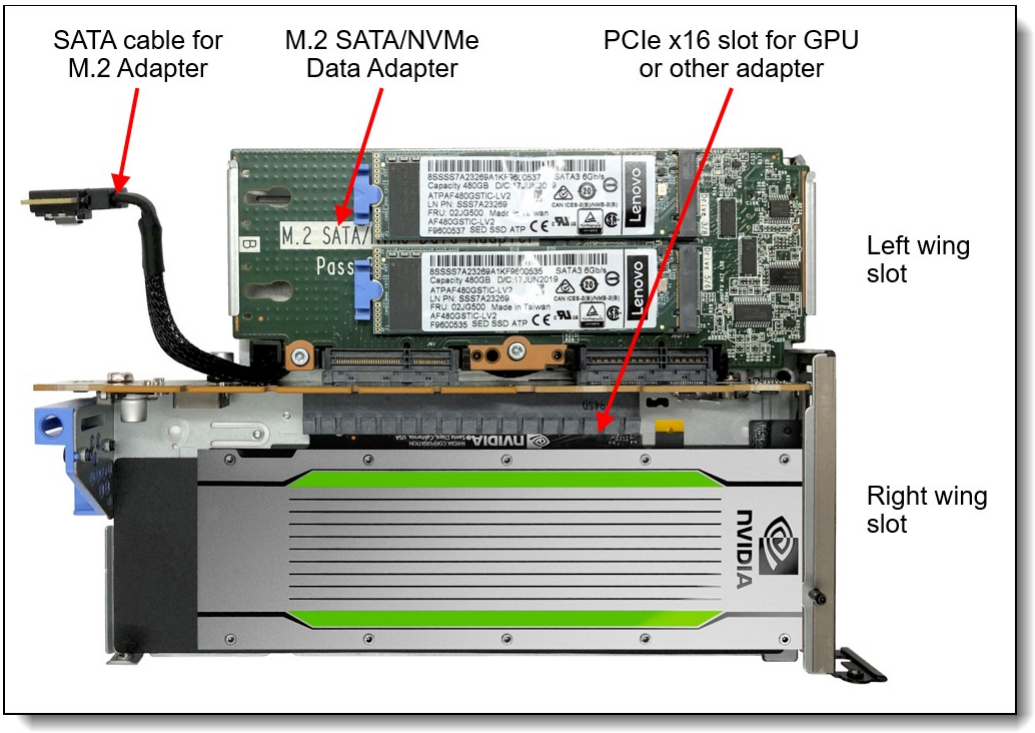

Figure 10. ThinkSystem SE350 PCIe Riser Cage (feature B6FD)

The M.2 Riser Cage, when viewed from the underside, is shown in the following figure. The figure shows an M.2 SATA/NVMe adapter installed in both the left wing (top) and right wing (bottom).

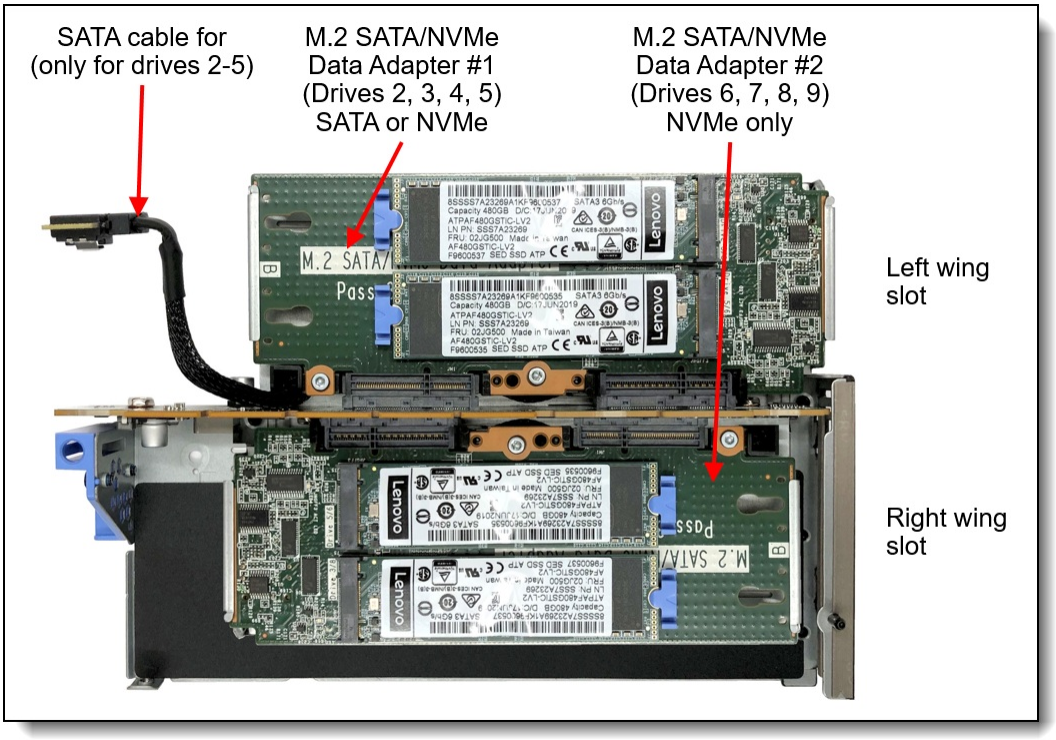

Figure 11. ThinkSystem SE350 M.2 Riser Cage (feature B6FE)

Internal storage

The internal storage of the SE350 server is implemented as M.2 drives. The drives are defined as either boot drives or data drives, based on their intended use in the server.

Internal drives are as follows:

- Data drives are installed in a four-port data drive adapter mounted in the riser card that is installed in a riser slot, as described in the I/O expansion section. One or two four-drive adapters are supported in the SE350 for a total of up to eight data drives.
- Boot drives are installed on an M.2 boot adapter, which in turn is installed in a dedicated slot on the system board (see the figure in the I/O expansion section). Either one or two M.2 drives are supported, depending on the boot adapter selected. SATA drives, either SED or non-SED drives are supported.

Controllers for internal storage

The SE350 has the following storage controllers:

- ThinkSystem M.2 Enablement Kit, 7Y37A01092, for boot drives
  - SATA drive: SATA controller of the processor (single drive, no RAID)
  - NVMe drives: No support
- ThinkSystem SE350 M.2 Mirroring Enablement Kit, 4M17A60519, for boot drives
  - SATA drives: Marvell 88SE9230 6 Gbps SATA controller on the M.2 adapter (RAID-0, 1; Hardware RAID)
  - NVMe drives: No support

  Note: The M.2 Mirroring Enablement Kit supports UEFI Boot mode only; no Legacy BIOS support
- ThinkSystem SE350 M.2 SATA/NVMe 4-bay Data Drive Enablement Kit, 4M17A37281, for data drives
  - SATA drives: Intel RSTe SATA controller embedded in the processor (RAID-0, 1, 5, 10; Software RAID)
  - NVMe drives: Direct connection to the processor (supports VROC RAID, as described in the Intel VROC onboard SATA and NVMe RAID section)

  Note: Mixing SATA drives and NVMe drives in the same adapter is not supported.
- ThinkSystem SE350 M.2 SATA 4-Bay Data RAID Mirroring Enablement Kit, 4M17A37606, for data drives
  - SATA drives: two independent Marvell 88SE9230 6 Gbps SATA controllers; each controller connects to two M.2 drives (RAID-0, 1; Hardware RAID); Also supports one M.2 drive in a non-RAID (JBOD) configuration
  - NVMe drives: No support

Ordering information for the controllers is listed in the following table.

Table 17. M.2 adapters

Part number	Feature code	Description	SATA/NVMe support	Maximum supported
Data drive adapters				
4M17A37281	B6FF	ThinkSystem SE350 M.2 SATA/NVMe 4-bay Data Drive Enablement Kit	SATA, NVMe	2
4M17A37606	B6FG	ThinkSystem SE350 M.2 SATA 4-Bay Data RAID Mirroring Enablement Kit	SATA	2
Boot drive adapters				
7Y37A01092	AUMU	ThinkSystem M.2 Enablement Kit	SATA	1
4M17A60519	B88P	ThinkSystem SE350 M.2 Mirroring Enablement Kit	SATA	1
SATA cable				
4Z57A37312	B6FH	ThinkSystem SE350 M.2 Adapter SATA Cable (for field upgrades, when adding a data drive adapter to the left wing; not supported with the right wing)	SATA	1

The data drive adapters support NVMe or SATA drives depending on the capabilities of the adapter plus the capabilities of the riser card slot (the "wing" as explained in the I/O expansion section) that the data adapter is installed in.

Configuration rules:

- Both left and right wings support NVMe drives when using the SATA/NVMe 4-bay Data Drive Adapter.
- Mixing SATA drives and NVMe drives in the same SATA/NVMe 4-bay Data Drive Adapter is not supported
- The SATA HW RAID Adapter does not support NVMe drives.
- The left wing slot of the riser supports connectivity to the onboard SATA controller via a SATA cable (4Z57A37312), however the right wing slot does not support this cable and therefore does not support SATA drives using the SATA/NVMe 4-bay Data Drive adapter.
- Both left and right wings support SATA drives when using the SATA HW RAID Adapter.
- When one wing uses the M.2 SATA RAID Adapter (4M17A37606) and the other wing uses the non-RAID M.2 SATA/NVMe Adapter (4M17A37281), VROC is not supported to provide RAID for the non-RAID adapter. This applies to config 6 and config 8 in the table below.
- For the data drive adapter and the boot drive adapter, the pairs of drives on opposite sides of the adapter must be the same form factor (that is, same length). See the table in the Internal drive options section for the form factor for each supported drive. The pairs of drives must be the same because they share the same mounting clip, as shown in the following figure:
  - Drive positions 1 and 4 must be M.2 drives with identical form factor, as they share the same mounting clip
  - Drive positions 2 and 3 must be M.2 drives with identical form factor, as they share the same mounting clip

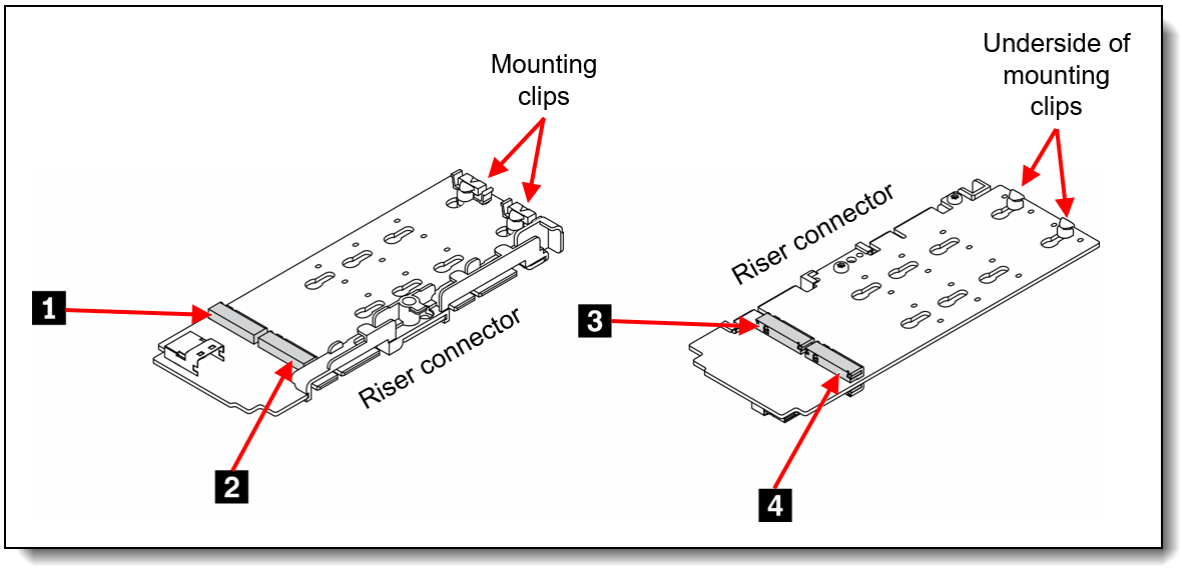

Figure 12. Drive positions in the 4-bay Data Drive Kits (drives 1 and 4 must be the same form factor; drives 2 and 3 must be the same form factor)

The following table lists the supported combinations of drive adapters.

Table 18. Supported combinations of riser card adapters

Config	Riser selection	Left wing (from front)	Drives	Right wing (from front)	Drives
1	PCIe Riser	M.2 SATA/NVMe Adapter	NVMe	PCIe Adapter	None
2	PCIe Riser	M.2 SATA/NVMe Adapter	SATA	PCIe Adapter	None
3	PCIe Riser	M.2 SATA RAID Adapter	SATA	PCIe Adapter	None
4	M.2 Riser	M.2 SATA/NVMe Adapter	NVMe	M.2 SATA/NVMe Adapter	NVMe
5	M.2 Riser	M.2 SATA/NVMe Adapter	SATA	M.2 SATA/NVMe Adapter	NVMe
6	M.2 Riser	M.2 SATA RAID Adapter	SATA	M.2 SATA/NVMe Adapter	NVMe
7	M.2 Riser	M.2 SATA RAID Adapter	SATA	M.2 SATA RAID Adapter	SATA
8	M.2 Riser	M.2 SATA/NVMe Adapter	SATA	M.2 SATA RAID adapter	SATA

The ThinkSystem M.2 Enablement Kit (single M.2 boot adapter) is shown in the following figure.



Figure 13. ThinkSystem M.2 Enablement Kit (shown with an 32 GB M.2 drive, not supported in the SE350)

The ThinkSystem SE350 M.2 Mirroring Enablement Kit (dual M.2 boot adapter) is shown in the following figure, with one 128GB M.2 drive partially inserted. The second M.2 drive is installed on the other side of the adapter.



Figure 14. ThinkSystem SE350 M.2 Mirroring Enablement Kit

Note: The ThinkSystem SE350 M.2 Mirroring Enablement Kit is the same hardware as the ThinkSystem M.2 with Mirroring Enablement Kit that is supported in ThinkSystem rack servers (7Y37A01093), however the firmware is different. They are not interchangeable and 7Y37A01093 is not supported on the SE350.

Intel VROC onboard RAID

The ThinkSystem SE350 M.2 SATA/NVMe 4-bay Data Drive Enablement Kit (4M17A37281) supports Intel VROC for RAID support. Intel VROC (Virtual RAID on CPU) is a feature of the Intel processor that enables Integrated RAID support.

There are two separate functions of VROC in the SE350:

- Intel VROC SATA RAID, formerly known as Intel RSTe
- Intel VROC NVMe RAID

VROC SATA RAID (RSTe) is available and supported with all SATA drives. It offers a 6 Gb/s connection to each drive and on the SE350 implements RAID levels 0, 1, 5, and 10. RAID 1 is limited to 2 drives per array, and RAID 10 is limited to 4 drives per array. Hot-spare functionality is also supported.

VROC NVMe RAID offers RAID support for any NVMe drives installed in the ThinkSystem SE350 M.2 SATA/NVMe 4-bay Data Drive Enablement Kit. On the SE350, RAID levels implemented are based on the VROC feature selected as indicated in the following table. RAID 1 is limited to 2 drives per array, and RAID 10 is limited to 4 drives per array. Hot-spare functionality is also supported.

The SE350 supports the VROC NVMe RAID offerings listed in the following table. The VROC Intel SSD Only offering only supports RAID on Intel branded NVMe SSDs; non-Intel branded NVMe SSDs cannot be configured in a RAID array.

Tip: These feature codes and part numbers are only for VROC RAID using NVMe drives, not SATA drives

Table 19. Intel VROC NVMe RAID ordering information and feature support

Part number	Feature code	Description	Intel NVMe SSDs	Non-Intel NVMe SSDs	RAID 0	RAID 1	RAID 10	RAID 5
CTO only	B9X7	Intel VROC (VMD NVMe RAID) Intel SSD Only	Yes	No	Yes	Yes	Yes	Yes
4L47A39164	B96G	Intel VROC (VMD NVMe RAID) Premium	Yes	Yes	Yes	Yes	Yes	Yes

Configuration notes:

- Intel VROC (VMD NVMe RAID) Intel SSD Only (feature B9X7) is only supported on Intel-branded

SSDs; it is not supported with Solidigm or any other brand of SSDs. Consult the specific drive product guides for details.

- If a feature code is ordered in a CTO build, the VROC functionality is enabled in the factory. For field upgrades, order a part number and it will be fulfilled as a Feature on Demand (FoD) license which can then be activated via the XCC management processor user interface.
- Intel VROC NVMe is supported on all Intel Xeon Scalable processors

Virtualization support: Virtualization support for Intel VROC is as follows:

- **VROC SATA RAID (RSTe)**: VROC SATA RAID is supported with Windows, RHEL and SLES, however it is not supported by virtualization hypervisors such as ESXi, KVM, Xen, and Hyper-V. Virtualization is only supported on the onboard SATA ports in AHCI (non-RAID) mode.
- **VROC (VMD) NVMe RAID**: VROC (VMD) NVMe RAID is supported by ESXi, KVM, Xen, and Hyper-V. ESXi support is limited to RAID 1 only; other RAID levels are not supported. Windows and Linux OSes support VROC RAID NVMe, both for host boot functions and for guest OS function, and RAID-0, 1, 5, and 10 are supported. On ESXi, VROC is supported with both boot and data drives.

Internal drive options

The following table lists the supported drive options. The table also indicates which drives are supported in a data drive adapter and which drives are supported in a boot drive adapter.

Configuration requirements:

- SED drives are not available in all markets.
- As described in the I/O expansion section, SATA drives are only supported in the left wing of the riser cards. The right wing of the riser only supports NVMe drives, not SATA drives.
- SATA and NVMe drives with SED encryption enabled are only supported in UEFI Boot mode. Legacy BIOS mode is not supported.
- Boot drive adapters: Both drives in a boot drive adapter must be the same form factor (physical length). See the table below for the form factor for each supported drive.
- Data drive adapters: For CTO orders, all 4 drives in a data drive adapter must be the same form factor, See the table below for the form factor for each supported drive. For field upgrades, it is possible to have drives with a different form factor with some configurations. See the Controllers for internal storage section for details.

Boot drives for VMware ESXi: For VMware ESXi boot support, only certain M.2 drives are supported, based on their endurance. For specifics, see Lenovo support tip HT512201.

Table 20. Supported M.2 drives

Part number	Feature code	Description	Form factor	Adapter support			
				M.2 SATA/NVMe 4-bay Data Drive Kit, 4M17A37281	M.2 SATA 4-Bay Data RAID Kit, 4M17A37606	Boot adapter: M.2 Kit, 7Y37A01092	Boot adapter: M.2 Mirroring Kit, 4M17A60519
SATA drives without encryption							
7N47A00130	AUUV	ThinkSystem M.2 128GB SATA SSD	2242	No	No	Yes	Yes
4XB7A17073	B919	ThinkSystem M.2 5300 480GB SATA SSD	2280	Yes	Yes	No	No

Part number	Feature code	Description	Form factor	Adapter support			
				M.2 SATA/NVMe 4-bay Data Drive Kit, 4M17A37281	M.2 SATA 4-Bay Data RAID Kit, 4M17A37606	Boot adapter: M.2 Kit, 7Y37A01092	Boot adapter: M.2 Mirroring Kit, 4M17A60519
4XB7A17074	B8JJ	ThinkSystem M.2 5300 960GB SATA SSD	2280	Yes	Yes	No	No
4XB7A38180	BCNZ	ThinkSystem M.2 5300 1.92TB SATA SSD	2280	Yes	Yes	No	No
7SD7A05703	B11V	ThinkSystem M.2 5100 480GB SATA SSD	2280	Yes	Yes	No	No
4XB7A14048	B5UP	ThinkSystem M.2 5100 960GB SATA SSD	2280	Yes	Yes	No	No
4XB7A39425	B75B	ThinkSystem M.2 1.92TB 5100 Pro SATA SSD	2280	Yes	Yes	No	No
4XB7A39422	B758	ThinkSystem M.2 120GB Industrial A600i SATA SSD	2280	No	No	Yes	Yes
4XB7A39423	B759	ThinkSystem M.2 480GB Industrial A600i SATA SSD	2280	Yes	Yes	No	No
	B91K			No	No	Yes	Yes
4XB7A39424	B75A	ThinkSystem M.2 800GB Industrial A600i SATA SSD	2280	Yes	Yes	No	No
SATA drives with encryption (UEFI Boot mode only)							
4XB7A89422	C1HA	ThinkSystem M.2 ER3 240GB Read Intensive SATA 6Gb NHS SSD	2280	Yes	Yes	No	No
	BYF7			No	No	Yes	Yes
4XB7A90049	BYF8	ThinkSystem M.2 ER3 480GB Read Intensive SATA 6Gb NHS SSD	2280	Yes	Yes	No	No
4XB7A90230	BYF9	ThinkSystem M.2 ER3 960GB Read Intensive SATA 6Gb NHS SSD	2280	Yes	Yes	No	No
4XB7A82286	BQ1Z	ThinkSystem M.2 5400 PRO 240GB Read Intensive SATA 6Gb NHS SSD	2280	Yes	Yes	No	No
4XB7A82287	BQ1Y	ThinkSystem M.2 5400 PRO 480GB Read Intensive SATA 6Gb NHS SSD	2280	Yes	Yes	No	No
4XB7A82288	BQ20	ThinkSystem M.2 5400 PRO 960GB Read Intensive SATA 6Gb NHS SSD	2280	Yes	Yes	No	No
4XB7A38138	BCP1	ThinkSystem M.2 5300 960GB SATA 6Gbps Non-Hot Swap SSD SED	2280	Yes	Yes	No	No
4XB7A37273	B6FM	ThinkSystem M.2 480GB 5100 Pro SATA SED SSD	2280	Yes	Yes	No	No
4XB7A37274	B6FN	ThinkSystem M.2 960GB 5100 Pro SATA SED SSD	2280	Yes	Yes	No	No
4XB7A37275	B6FP	ThinkSystem M.2 1.92TB 5100 Pro SATA SED SSD	2280	Yes	Yes	No	No
4XB7A37270	B6FT	ThinkSystem M.2 120GB Industrial A600i SATA SED	2280	No	No	Yes	Yes
4XB7A37271	B6FK	ThinkSystem M.2 480GB Industrial A600i SATA SED	2280	Yes	Yes	No	No
	B91L			No	No	Yes	Yes
4XB7A37272	B6FL	ThinkSystem M.2 800GB Industrial A600i SATA SED	2280	Yes	Yes	No	No

Part number	Feature code	Description	Form factor	Adapter support			
				M.2 SATA/NVMe 4-bay Data Drive Kit, 4M17A37281	M.2 SATA 4-Bay Data RAID Kit, 4M17A37606	Boot adapter: M.2 Kit, 7Y37A01092	Boot adapter: M.2 Mirroring Kit, 4M17A60519
NVMe drives without encryption (drive options include a heatsink)							
4XB7A64190	BE1X	ThinkSystem M.2 N600Si 650GB NVMe PCIe 3.0 x4 Non-Hot Swap SSD (Industrial)	2280	Yes	No	No	No
4XB7A64203	BE1W	ThinkSystem M.2 N600Si 960GB NVMe PCIe 3.0 x4 Non-Hot Swap SSD (Industrial)	2280	Yes	No	No	No
4XB7A64204	BE1V	ThinkSystem M.2 N600Si 1.92TB NVMe PCIe 3.0 x4 Non-Hot Swap SSD (Industrial)	2280	Yes	No	No	No
NVMe drives with encryption (drive options include a heatsink) (UEFI Boot mode only)							
4XB7A39426	B75C	ThinkSystem M.2 650GB P4511 NVMe SED High Endurance	22110	Yes	No	No	No
4XB7A39427	B75D	ThinkSystem M.2 1TB P4511 NVMe SED	22110	Yes	No	No	No
4XB7A39428	B75E	ThinkSystem M.2 2TB P4511 NVMe SED	22110	Yes	No	No	No
4XB7A82676	BQUL	ThinkSystem M.2 7450 MAX 800GB Mixed Use NVMe PCIe 4.0 x4 NHS SSD (with Heatsink)	2280	Yes	No	No	No
4XB7A82674	BQUJ	ThinkSystem M.2 7450 PRO 960GB Read Intensive NVMe PCIe 4.0 x4 NHS SSD (with Heatsink)	2280	Yes	No	No	No
4XB7A82675	BQUK	ThinkSystem M.2 7450 PRO 1.92TB Read Intensive NVMe PCIe 4.0 x4 NHS SSD (with Heatsink)	22110	Yes	No	No	No
4XB7A82852	BRFZ	ThinkSystem M.2 7450 PRO 3.84TB Read Intensive NVMe PCIe 4.0 x4 NHS SSD (with Heatsink)	22110	Yes	No	No	No
4XB7A82625	BQUM	ThinkSystem M.2 N600Si 650GB Read Intensive NVMe PCIe 3.0 x4 NHS SSD SED (Industrial)	2280	Yes	No	No	No
4XB7A82627	BQUN	ThinkSystem M.2 N600Si 960GB Read Intensive NVMe PCIe 3.0 x4 NHS SSD SED (Industrial)	2280	Yes	No	No	No
4XB7A82628	BQUP	ThinkSystem M.2 N600Si 1.92TB Read Intensive NVMe PCIe 3.0 x4 NHS SSD SED (Industrial)	2280	Yes	No	No	No

The use of M.2 drives in high temperature and high shock & vibration conditions is described in the Operating Environment section.

To view the technical specifications of these drives, see the ThinkSystem SSD Portfolio: https://lenovopress.lenovo.com/lp1261-lenovo-thinksystem-ssd-portfolio#availability=Available&se350-support=SE350

Optical drive

The server supports the external USB optical drive listed in the following table.

Table 21. External optical drive

Part number	Feature code	Description
7XA7A05926	AVV8	ThinkSystem External USB DVD RW Optical Disk Drive

The drive is based on the Lenovo Slim DVD Burner DB65 drive and supports the following formats: DVD-RAM, DVD-RW, DVD+RW, DVD+R, DVD-R, DVD-ROM, DVD-R DL, CD-RW, CD-R, CD-ROM.

Network Modules

The network ports on the front of the SE350 are provided by a Network Module, a board that plugs into the system board by a dedicated connector. See the Internal view for the location of the connector. The Network Modules are listed in the following table.

Table 22. Network Modules

Part number	Feature code	Description
CTO only	B6F4	ThinkSystem SE350 10GbE SFP+ 2-Port, 10/100/1GbE RJ45 2-Port Intel i350 SFP+ Wired Network Module
CTO only	B7Z7	ThinkSystem SE350 4xRJ45 10GBASE-T LOM Package 10GBASE-T Wired Network Module
CTO only	B6F3	ThinkSystem SE350 10GbE SFP+ 2-Port, 1GbE SFP 2-Port Switch, Wireless Capable Wireless Network Module

The Network Modules have the following characteristics:

- Wireless Network Module (also known as the Wireless enabled LOM package), offering these network connections:
  - Wi-Fi (802.11 a/b/g/n/ac) with two external antennas
  - Optional LTE with two external antennas
  - 2x 10GbE SFP+ ports
  - 2x 1GbE SFP ports
  - 2x 1GbE RJ45 (also support 10/100 Mbps)
  - 1x dedicated port for remote management
  - VGA port
  - 2x USB 3.2 G1 ports (5 Gb/s)
- SFP+ Wired Network Module (also known as the 10G SFP+ LOM package), offering these network connections:
  - 2x 10GbE SFP+
  - 2x 1GbE RJ45 (also support 10/100 Mbps)
  - 2x dedicated ports for remote management (can be used as redundant connections or daisy-chain capable)
  - VGA port
  - 2x USB 3.2 G1 ports (5 Gb/s)
- 10GBASE-T Wired Network Module (also known as the 10GBASE-T LOM Package), offering these network connections:
  - 2x 10GBASE-T RJ45 (also support 1 Gb/s)
  - 2x 1GbE RJ45 (also support 10/100 Mbps)
  - 2x dedicated ports for remote management (can be used as redundant connections or daisy-chain capable)

- VGA port
- 2x USB 3.2 G1 ports (5 Gb/s)

With the Wireless Network Module, by default both Wi-Fi and LTE are enabled. If desired, you can remove LTE support by selecting the feature code in the following table.

Table 23. Ordering the Wireless network module without LTE support

Part number	Feature code	Description
CTO only	BAHF	Wireless Adapter Carrier Card for WiFi only

Market availability: Wireless is currently not be available in all markets due to homologation requirements. Since Wi-Fi and LTE are required components of the Wireless network module, that means that the Wireless network module may not be available in your region.

Rack installation: The Wireless network module is not supported when the servers are installed in the 1U or 2U rack enclosures.

The network modules are shown in the following figure (Wireless network module is now withdrawn).

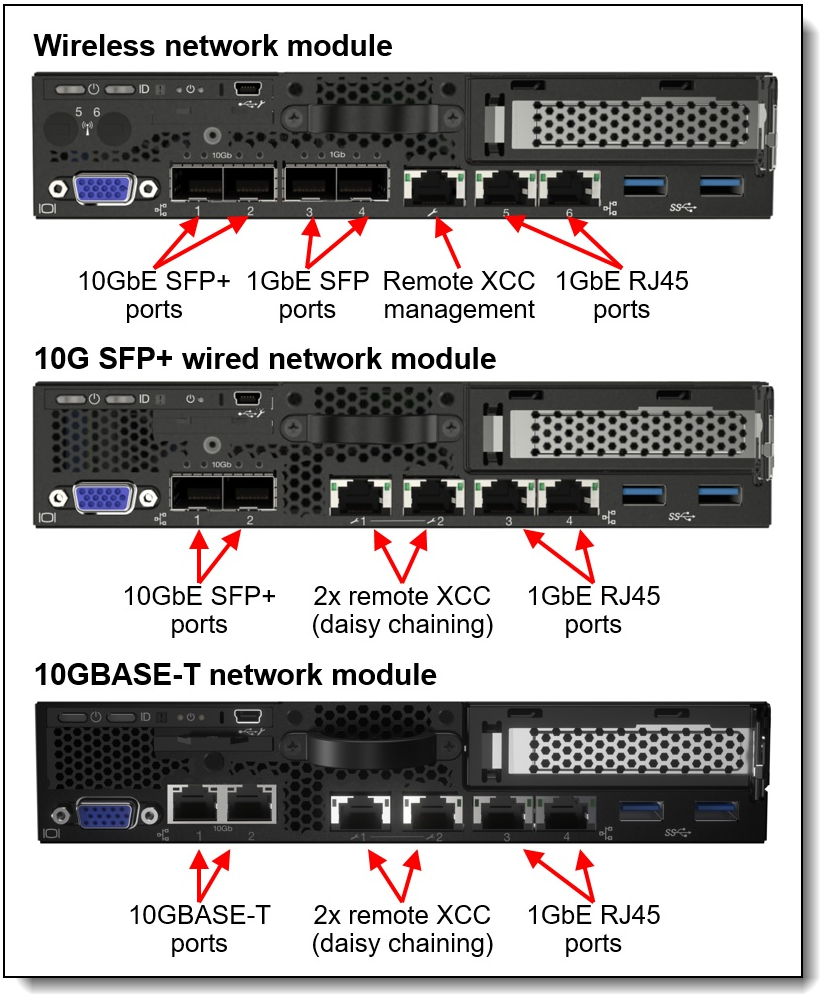

Figure 15. Ports of the available Network Modules

The block diagrams of the Network Modules are shown in the System architecture section.

The specifications of the connections in the Wireless Network Module are as follows:

- 10 GbE connections:
  - Routed from the networking functions integrated in the Xeon-D processor
  - Based on the Intel X722 controller
  - Supports iWARP (Internet Wide Area RDMA protocol)
  - Port 1 of the 10GbE ports can be shared with the XCC management processor for Wake-on-LAN and NC-SI support
- Integrated NXP LS1046A network switch chip, provides all network connections other than the 10GbE ports
- Wi-Fi connection can be used as a Wi-Fi client or as a Wi-Fi access point
- Reset pinhole on the front panel to reboot the NXP chip, if needed

The specifications of the connections in the two Wired Network Modules are as follows:

- 10 GbE connections:
  - RJ45 ports or SFP+ cages, depending on the Network Module
  - Routed from the networking functions integrated in the Xeon-D processor
  - Based on the Intel X722 controller
  - Supports iWARP
  - Port 1 of the 10GbE ports can be shared with the XCC management processor for Wake-on-LAN and NC-SI support
- 1GbE RJ45 ports
  - Based on Intel I350 controller

  Note: The Intel I350 controller is not supported by Microsoft for use with Azure Stack HCI. Refer to the following document for additional details: Lenovo ThinkAgile MX Certified Configurations for Azure Stack HCI - V1 Servers.
- 1GbE XCC management ports:
  - Direct connections to the XClarity Controller (XCC) management processor
  - Based on Realtek RTL8363SC controller
  - Two ports, either as a redundant pair of ports or can be used as a daisy chain with multiple nearby SE350 servers

Both Wired Network Modules provide the ability to daisy-chain the XCC management connections thereby reducing the number of ports you need in your management switches and reducing the number of switch ports needed for systems management. With this feature you can connect the first SE350 to your management network and the adjacent SE350 connects to the first SE350. The third SE350 can then connect to the second SE350. Up to 7 servers can be connected in a daisy-chain configuration.

The two management ports of the Wired Network Modules can also be used to form a redundant pair. In such a configuration, they share the same IP address; redundancy is at the Layer 2 level.

The SFP+ ports in the Wireless Network Module and the SFP+ Wired Network Module support the transceivers listed in the following table.

Table 24. Transceivers for Network Modules

Part number	Feature code	Description
1Gb transceivers		
00FE333	A5DL	SFP 1000Base-T (RJ-45) Transceiver
81Y1622	3269	SFP SX Transceiver
10Gb transceivers		
46C3447	5053	SFP+ SR Transceiver
00MY034	ATTJ	Lenovo Dual Rate 1G/10GB SFP Transceiver
7G17A03130	AVV1	Lenovo 10GBaseT SFP+ Transceiver

Network cables

The SFP+ ports of the Network Modules support the following fiber optic cables and direct-attach copper (DAC) cables.

Table 25. 10GbE Optical cables and DAC cables

Part number	Feature code	Description
LC-LC OM3 Fiber Optic Cables (these cables require a 10 GbE SFP+ SR transceiver)		
00MN499	ASR5	Lenovo 0.5m LC-LC OM3 MMF Cable
00MN502	ASR6	Lenovo 1m LC-LC OM3 MMF Cable
00MN505	ASR7	Lenovo 3m LC-LC OM3 MMF Cable
00MN508	ASR8	Lenovo 5m LC-LC OM3 MMF Cable
00MN511	ASR9	Lenovo 10m LC-LC OM3 MMF Cable
00MN514	ASRA	Lenovo 15m LC-LC OM3 MMF Cable
00MN517	ASRB	Lenovo 25m LC-LC OM3 MMF Cable
00MN520	ASRC	Lenovo 30m LC-LC OM3 MMF Cable
SFP+ 10Gb Passive DAC Cables		
00AY764	A51N	1.5m Passive DAC SFP+ Cable
00AY765	A51P	2m Passive DAC SFP+ Cable
90Y9430	A1PJ	3m Passive DAC SFP+ Cable

The RJ45 ports of the Network Modules support the following Category 6 (CAT 6) cables.

Table 26. CAT6 cables

Part number	Feature code	Description
CAT6 Green Cables		
00WE123	AVFW	0.75m Green Cat6 Cable
00WE127	AVFX	1.0m Green Cat6 Cable
00WE131	AVFY	1.25m Green Cat6 Cable
00WE135	AVFZ	1.5m Green Cat6 Cable
00WE139	AVG0	3m Green Cat6 Cable

When the SE350 is configured with the security bezel, it is recommended you use the CAT6 Ethernet cables listed in the following table. These cables have connectors that are designed to fit with the SE350 security bezel attached and will ensure that the locking bezel functions correctly.

Table 27. Ethernet cables for use with the security bezel

Part number	Feature code	Description
4X97A83980	BRW9	Lenovo 750mm Cat6 RJ45 White Cable without Jacket
4X97A83981	BRWA	Lenovo 1000mm Cat6 RJ45 White Cable without Jacket
4X97A83982	BRWB	Lenovo 1250mm Cat6 RJ45 White Cable without Jacket
4X97A83983	BRWC	Lenovo 1500mm Cat6 RJ45 White Cable without Jacket
4X97A83984	BRWD	Lenovo 3000mm Cat6 RJ45 White Cable without Jacket

Network adapters

The following table lists additional supported network adapters that can be installed in the PCIe slot when the PCIe Riser (feature B6FD) is selected.

Table 28. Supported PCIe Network Adapters

Part number	Feature code	Description	Maximum supported
Gigabit Ethernet			
7ZT7A00484	AUZV	ThinkSystem Broadcom 5719 1GbE RJ45 4-Port PCIe Ethernet Adapter	1
10 GbE			
7ZT7A00496	AUKP	ThinkSystem Broadcom 57416 10GBASE-T 2-Port PCIe Ethernet Adapter	1
25 GbE			
4XC7A08295	BCD6	ThinkSystem Intel E810-DA2 10/25GbE SFP28 2-Port PCIe Ethernet Adapter	1
4XC7A08249	B653	ThinkSystem Mellanox ConnectX-4 Lx 10/25GbE SFP28 2-port PCIe Ethernet Adapter	1

For more information, including the transceivers and cables that each adapter supports, see the list of Lenovo Press Product Guides in the Networking adapters category:
https://lenovopress.com/servers/options/ethernet

GPU adapters

The following table lists additional supported GPUs that can be installed in the PCIe slot when the PCIe Riser (feature B6FD) is selected.

Table 29. Supported GPUs

Part number	Feature code	Description	Maximum supported
4X67A84824	BS2C	ThinkSystem NVIDIA L4 24GB PCIe Gen4 Passive GPU	1
4X67A14926	B4YB	ThinkSystem NVIDIA T4 16GB PCIe Passive GPU	1
4X67A81547	BQZT*	ThinkSystem NVIDIA A2 16GB PCIe Gen4 Passive GPU w/o CEC	1
4M17A60523	BAGM	ThinkSystem SE350 NVIDIA A2/T4 GPU Holder (Extreme Shock & Vibe)	1
4X67A84009	BS49	ThinkSystem Qualcomm Cloud AI 100	1

* Nvidia A2 GPU Adapter (BQZT) is supported up to 40C. For 50C support follow the special bid route

Special bid: Under special bid conditions, the SE350 with A2 GPU (BQZT) adapter is supported up to 50C ambient temperature. Contact your Lenovo representative for details.

Configuration notes:

- The use of a GPU in high temperature and high shock & vibration conditions is described in the Operating Environment section.
- Some NVIDIA A Series GPUs are available as two feature codes, one with a CEC chip and one without a CEC chip (ones without the CEC chip have "w/o CEC" in the name). The CEC is a secondary Hardware Root of Trust (RoT) module that provides an additional layer of security, which can be used by customers who have high regulatory requirements or high security standards. NVIDIA uses a multi-layered security model and hence the protection offered by the primary Root of Trust embedded in the GPU is expected to be sufficient for most customers. The CEC defeatured products still offer Secure Boot, Secure Firmware Update, Firmware Rollback Protection, and In-Band Firmware Update Disable. Specifically, without the CEC chip, the GPU does not support Key Revocation or Firmware Attestation. CEC and non-CEC GPUs of the same type of GPU can be mixed in field upgrades.

For information about the GPU, see the ThinkSystem GPU Summary, available at:
https://lenovopress.com/lp0768-thinksystem-thinkagile-gpu-summary

Cooling

The SE350 server has three 40 mm non-hot-swap fans. All three are standard and support N+1 redundancy.

Power supplies

The SE350 supports two types of power via a Power Distribution Module (PDM):

- 12V PDM connected to one or two plug-in external AC adapters
- -48V DC wired input for Telco customers

For the 12V PDM, one or two AC adapters are used to provide power. Ordering information is listed in the following table.

Table 30. Power options

Part number	Feature code	Description	Maximum supported
Power distribution modules (PDMs)			
CTO only	B6FU	ThinkSystem SE350 12V PDM	1
CTO only	BAG6	ThinkSystem SE350 -48VDC PDM (-40VDC to -72VDC) (all markets except PRC)	1
CTO only	B6FV	ThinkSystem SE350 -48VDC PDM (-40VDC to -72VDC) (PRC only)	1
AC adapter for 12V PDM			
4X27A37265	B6FW	ThinkEdge 240W 230V/115V External Power Supply	2
4X27A37266	B6FX	ThinkEdge 240W 230V/115V External Power Supply v2	2

Details regarding the use of AC adapters:

- One or two AC adapters are supported.
- When two AC adapters are connected, the second AC adapter is redundant.
- Most configurations have a power budget of less than one AC adapter, however any of the following configurations are likely to exceed the power budget of a single AC adapter and will require the second AC adapter be connected:
  - GPU is installed
  - Any quantity of LRDIMMs are installed
  - Processor with 16 cores is selected
  - Four or more NVMe drives are installed
- In case of failure of a single AC adapter, system will throttle if power budget is above a single adapter capacity
- AC Adapters do not include a line cord. See the next section for available power cords.

Details regarding the use of the -48V DC PDM:

- Input range is -40.8 to -72 VDC, 8.4A
- Hardwired (non-plugged) connection
- Supported 2 meter power cable is listed in the table below (feature B7FE)
- Single power input; no redundancy
- Suitable for Telco and Utilities customers

Power cords

Line cords and rack power cables can be ordered as listed in the following table.

Table 31. Power cords

Part number	Feature code	Description
Power cord for -48V PDM		
CTO only	B7FE	ThinkSystem SE350 -48V DC Power Cord
Power cord for AC adapters		
39Y7930	6222	2.8m, 10A/250V, C13 to IRAM 2073 (Argentina) Line Cord
81Y2384	6492	4.3m 10A/220V, C13 to IRAM 2073 (Argentina) Line Cord
39Y7924	6211	2.8m, 10A/250V, C13 to AS/NZ 3112 (Australia/NZ) Line Cord

Part number	Feature code	Description
81Y2383	6574	4.3m, 10A/230V, C13 to AS/NZS 3112 (Aus/NZ) Line Cord
69Y1988	6532	2.8m, 10A/250V, C13 to NBR 14136 (Brazil) Line Cord
81Y2387	6404	4.3m, 10A/250V, C13 - 2P+Gnd (Brazil) Line Cord
39Y7928	6210	2.8m, 220-240V, C13 to GB 2099.1 (China) Line Cord
81Y2378	6580	4.3m, 10A/220V, C13 to GB 2099.1 (China) Line Cord
39Y7918	6213	2.8m, 10A/250V, C13 to DK2-5a (Denmark) Line Cord
81Y2382	6575	4.3m, 10A/230V, C13 to DK2-5a (Denmark) Line Cord
39Y7917	6212	2.8m, 10A/230V, C13 to CEE7-VII (Europe) Line Cord
81Y2376	6572	4.3m, 10A/230V, C13 to CEE7-VII (Europe) Line Cord
39Y7927	6269	2.8m, 10A/250V, C13(2P+Gnd) (India) Line Cord
81Y2386	6567	4.3m, 10A/240V, C13 to IS 6538 (India) Line Cord
39Y7920	6218	2.8m, 10A/250V, C13 to SI 32 (Israel) Line Cord
81Y2381	6579	4.3m, 10A/230V, C13 to SI 32 (Israel) Line Cord
39Y7921	6217	2.8m, 220-240V, C13 to CEI 23-16 (Italy/Chile) Line Cord
81Y2380	6493	4.3m, 10A/230V, C13 to CEI 23-16 (Italy/Chile) Line Cord
46M2593	A1RE	2.8m, 12A/125V, C13 to JIS C-8303 (Japan) Line Cord
4L67A08357	6533	2.8m, 200V, C13 to JIS C-8303 (Japan) Line Cord
39Y7926	6335	4.3m, 12A/100V, C13 to JIS C-8303 (Japan) Line Cord
4L67A08362	6495	4.3m, 12A/200V, C13 to JIS C-8303 (Japan) Line Cord
39Y7922	6214	2.8m, 10A/250V, C13 to SABS 164 (S Africa) Line Cord
81Y2379	6576	4.3m, 10A/230V, C13 to SABS 164 (South Africa) Line Cord
39Y7925	6219	2.8m, 220-240V, C13 to KETI (S Korea) Line Cord
81Y2385	6494	4.3m, 12A/220V, C13 to KSC 8305 (S. Korea) Line Cord
39Y7919	6216	2.8m, 10A/250V, C13 to SEV 1011-S24507 (Swiss) Line Cord
81Y2390	6578	4.3m, 10A/230V, C13 to SEV 1011-S24507 (Sws) Line Cord
23R7158	6386	2.8m, 10A/125V, C13 to CNS 10917-3 (Taiwan) Line Cord
81Y2375	6317	2.8m, 10A/240V, C13 to CNS 10917-3 (Taiwan) Line Cord
4L67A08363	AX8B	4.3m, 10A 125V, C13 to CNS 10917 (Taiwan) Line Cord
81Y2389	6531	4.3m, 10A/250V, C13 to 76 CNS 10917-3 (Taiwan) Line Cord
39Y7923	6215	2.8m, 10A/250V, C13 to BS 1363/A (UK) Line Cord
81Y2377	6577	4.3m, 10A/230V, C13 to BS 1363/A (UK) Line Cord
90Y3016	6313	2.8m, 10A/120V, C13 to NEMA 5-15P (US) Line Cord
4L67A08359	6370	4.3m, 10A/125V, C13 to NEMA 5-15P (US) Line Cord
4L67A08361	6373	4.3m, 10A/250V, C13 to NEMA 6-15P (US) Line Cord
46M2592	A1RF	2.8m, 10A/250V, C13 to NEMA 6-15P Line Cord
Rack jumper cables for AC adapters		
00Y3043	A4VP	1.0m, C13 to C14 Jumper Cord, Rack Power Cable
4L67A08365	B0N4	2.0m, 10A/100-250V, C13 to C14 Jumper Cord
4L67A08366	6311	2.8m, 10A/100-250V, C13 to C14 Jumper Cord
39Y7937	6201	1.5m, 10A/100-250V, C13 to IEC 320-C14 Rack Power Cable
39Y7932	6263	4.3m, 10A/100-250V, C13 to IEC 320-C14 Rack Power Cable

Systems management

The SE350 contains an integrated service processor, XClarity Controller (XCC), which provides advanced control, monitoring, and alerting functions. The XCC is based on the Pilot4 XE401 baseboard management controller (BMC) using a dual-core ARM Cortex A9 service processor.

Topics in this section:

- Activation
- Local management
- Lenovo XClarity Mobile
- Remote management
- Lenovo XClarity Provisioning Manager
- Lenovo XClarity Administrator
- Lenovo XClarity Essentials
- Lenovo XClarity Energy Manager
- Lenovo Capacity Planner

Activation

Activation is an optional security feature of the ThinkEdge SE350 that ensures that the system delivered from the factory is only used by its intended recipient and that all data and applications remains secure. Activation is enabled on a factory order when the Security Pack Enabled feature code (feature BLZ2) is selected as described in the Security Pack section.

Enabled by default: Activation is enabled by default for new CTO orders. Activation can be disabled in the factory order as described in the Security Pack section.

If Activation is enabled, the system is delivered in system lockdown and will require activation before operation. There are three ways the server can be activated:

- Using a mobile device (iOS or Android) connect to the server to the USB management port on the front of the server and running the ThinkShield Edge Mobile Management app.
- Connecting the system to the Internet via the XCC management port on the front of the server and accessing the ThinkShield Key Vault Portal from a web browser on another system.
- In a disconnected mode, where neither a mobile device or an internet connection to the ThinkEdge SE350 are available.

Details of the activation process are described in the following documents:

- Activation Guide (2-page flyer that is included with the server)
- SE350 Setup Guide, Chapter 4

These documents are available from:
https://thinksystem.lenovofiles.com/help/topic/SE350/pdf_files.html?cp=2_0_0

For further information on activation and the use of the ThinkShield Edge Mobile Management app, including videos and tours, see this support page:
https://support.lenovo.com/us/en/solutions/ht509033

Local management

The SE350 offers a front operator panel with key LED status indicators, as shown in the following figure.

Tip: The Wireless reset pinhole and the front SMA antenna ports are only present when the Wireless network module is selected.

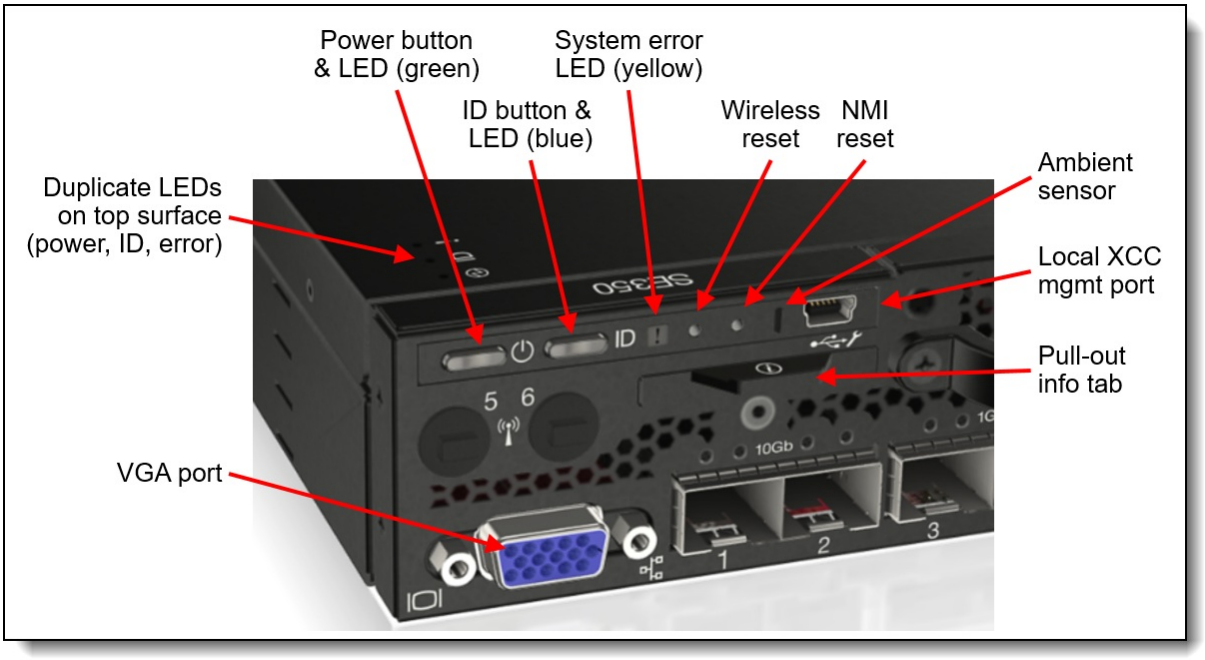

Figure 16. Front operator panel

The buttons on the front of the server:

- Power button
- Identification button - turns on the LED housed within the button as well as passing the signal to the XCC for display remotely in XClarity Administrator
- Wireless reset pinhole (Wireless network module only) - reboots the integrated switch function in the Wireless network module which restarts all wireless functions and all wired ports except the 10GbE connections
- NMI reset pinhole - sends a NMI signal to the processor thereby causing a blue-screen trap of the operating system

The LEDs on the front of the server are as follows:

- Power LED (green) - indicated activation and power status, as follows:
  - Off - Server does not have power applied
  - Fast flash (4 times per second) - Either server has just had power applied and is not ready to be powered on yet, or the server has not been activated yet
  - Slow flash (once per second) - Server is ready to be powered on
  - On solid - Server is powered on
- Identification LED (blue) - lights when the button is pressed or when the function is activated remotely in XClarity Controller.
- System error LED (yellow)

The front of the server also houses an information pull-out tab (also known as the network access tag). See Figure 2 for the location. A label on the tab shows the network information (MAC address and other data) to remotely access the XCC service processor.

System status with XClarity Mobile

The SE350 also supports local systems management using the XClarity Mobile app. The app includes a tethering function where you can connect your Android or iOS device to the server via the micro-USB port on the server.

You will need a mobile device with a supported operating system installed (iOS 12 or later, Android 5.0 or later), plus the USB charging cable that comes with your phone. You will also need the USB-to-mini-USB cable that ships with the SE350.

The steps to connect the mobile device are as follows:

1. Connect the mobile device via your USB cable and the supplied USB-to-mini-USB cable to the SE350's mini-USB port with the management symbol 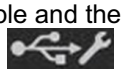
2. In iOS or Android settings, enable Personal Hotspot or USB Tethering
3. Launch the Lenovo XClarity Mobile app

Once connected you can see the following information:

- Server status including error logs (read only, no login required)
- Server management functions (XClarity login credentials required)

Remote management

Remote server management is provided through industry-standard interfaces:

- Intelligent Platform Management Interface (IPMI) Version 2.0
- Simple Network Management Protocol (SNMP) Version 3 (no SET commands; no SNMP v1)
- Common Information Model (CIM-XML)
- Representational State Transfer (REST) support
- Redfish support (DMTF compliant)
- Web browser - HTML 5-based browser interface (Java and ActiveX not required) using a responsive design (content optimized for device being used - laptop, tablet, phone) with NLS support

Remote management is available via the following connections:

- Via the dedicated Ethernet ports for management. The wireless and wired network modules both have a dedicated RJ45 Ethernet port for remote management. See the Network Modules section for the location of these ports.
- Via Port 1 of the 10 GbE SFP+ ports supports NC-SI to allow sharing of the Ethernet port between the operating system and remote management.
- Via a wireless connection (Wireless Network Module only). This connection is disabled by default, but can be enabled and configured in the XCC via the BMC Network Bridge setting.

There are two XClarity Controller upgrades available for the SE350 server, Advanced and Enterprise.

Lenovo XClarity Controller Advanced adds the following remote control functions:

- Remotely viewing video with the following graphics resolutions: Up to 1600x1200 with up to 23 bits per pixel; or Up to 1920x1200 with up to 15 bits per pixel
- Remotely accessing the server using the keyboard and mouse from a remote client
- Capturing blue-screen errors

- International keyboard mapping support
- LDAP-based authentication

Lenovo XClarity Controller Enterprise enables the following additional features:

- Boot Capture
- Remote mounting of CD-ROM (ISO) and diskette (IMG) files as virtual drives
- Virtual console collaboration - Ability for up to 6 remote users to be log into the remote session simultaneously
- Power capping
- License for XClarity Energy Manager

Preconfigured models come with either XClarity Controller Standard, Advanced or Enterprise, depending on the model. See the Models section for details. The following table shows the field upgrades available for preconfigured models.

Table 32. XClarity Controller field upgrades

Part number	Feature code	Description
4L47A09132	AVUT	ThinkSystem XClarity Controller Standard to Advanced Upgrade (for servers that have XCC Standard)
4L47A09133	AVUU	ThinkSystem XClarity Controller Advanced to Enterprise Upgrade (for servers that have XCC Advanced)

For configure-to-order (CTO) models, you can elect to have one of the following XCC functionality by selecting the appropriate XCC feature codes as listed in the following table:

- XCC Standard - select neither feature listed in the table
- XCC Advanced - select feature AVUT
- XCC Enterprise - select feature AUPW

Table 33. XClarity Controller Upgrades for configure-to-order

Feature code	Description
AVUT	ThinkSystem XClarity Controller Standard to Advanced Upgrade
AUPW	ThinkSystem XClarity Controller Standard to Enterprise Upgrade

Lenovo XClarity Provisioning Manager

Lenovo XClarity Provisioning Manager (LXPM) is a UEFI-based application embedded in ThinkSystem servers and accessible via the F1 key during system boot.

LXPM provides the following functions:

- Graphical UEFI Setup
- System inventory information and VPD update
- System firmware updates (UEFI and XCC)
- RAID setup wizard
- OS installation wizard (including unattended OS installation)
- Diagnostics functions

Lenovo XClarity Administrator

Lenovo XClarity Administrator is a centralized resource management solution designed to reduce complexity, speed response, and enhance the availability of Lenovo systems and solutions. It provides agent-free hardware management for ThinkSystem servers. The administration dashboard is based on HTML 5 and allows fast location of resources so tasks can be run quickly.

Because Lenovo XClarity Administrator does not require any agent software to be installed on the managed endpoints, there are no CPU cycles spent on agent execution, and no memory is used, which means that up to 1GB of RAM and 1 - 2% CPU usage is saved, compared to a typical managed system where an agent is required.

Lenovo XClarity Administrator is an optional software component for the SE350. The software can be downloaded and used at no charge to discover and monitor the SE350 and to manage firmware upgrades.

If software support is required for Lenovo XClarity Administrator, or premium features such as configuration management and operating system deployment are required, Lenovo XClarity Pro software subscription should be ordered. Lenovo XClarity Pro is licensed on a per managed system basis, that is, each managed Lenovo system requires a license.

The following table lists the Lenovo XClarity software license options.

Table 34. Lenovo XClarity Pro ordering information

Part number	Feature code	Description
00MT201	1339	Lenovo XClarity Pro, per Managed Endpoint w/1 Yr SW S&S
00MT202	1340	Lenovo XClarity Pro, per Managed Endpoint w/3 Yr SW S&S
00MT203	1341	Lenovo XClarity Pro, per Managed Endpoint w/5 Yr SW S&S
7S0X000HWW	SAYV	Lenovo XClarity Pro, per Managed Endpoint w/6 Yr SW S&S
7S0X000JWW	SAYW	Lenovo XClarity Pro, per Managed Endpoint w/7 Yr SW S&S

Lenovo XClarity Administrator offers the following standard features that are available at no charge:

- Auto-discovery and monitoring of Lenovo systems
- Firmware updates and compliance enforcement
- External alerts and notifications via SNMP traps, syslog remote logging, and e-mail
- Secure connections to managed endpoints
- NIST 800-131A or FIPS 140-3 compliant cryptographic standards between the management solution and managed endpoints
- Integration into existing higher-level management systems such as cloud automation and orchestration tools through REST APIs, providing extensive external visibility and control over hardware resources
- An intuitive, easy-to-use GUI
- Scripting with Windows PowerShell, providing command-line visibility and control over hardware resources

Lenovo XClarity Administrator offers the following premium features that require an optional Pro license:

- Pattern-based configuration management that allows to define configurations once and apply repeatedly without errors when deploying new servers or redeploying existing servers without disrupting the fabric
- Bare-metal deployment of operating systems and hypervisors to streamline infrastructure provisioning

For more information, refer to the Lenovo XClarity Administrator Product Guide:
http://lenovopress.com/tips1200

Lenovo XClarity Integrators

Lenovo also offers software plug-in modules, Lenovo XClarity Integrators, to manage physical infrastructure from leading external virtualization management software tools including those from Microsoft and VMware.

These integrators are offered at no charge, however if software support is required, a Lenovo XClarity Pro software subscription license should be ordered.

Lenovo XClarity Integrators offer the following additional features:

- Ability to discover, manage, and monitor Lenovo server hardware from VMware vCenter or Microsoft System Center
- Deployment of firmware updates and configuration patterns to Lenovo x86 rack servers and Flex System from the virtualization management tool
- Non-disruptive server maintenance in clustered environments that reduces workload downtime by dynamically migrating workloads from affected hosts during rolling server updates or reboots
- Greater service level uptime and assurance in clustered environments during unplanned hardware events by dynamically triggering workload migration from impacted hosts when impending hardware failures are predicted

For more information about all the available Lenovo XClarity Integrators, see the Lenovo XClarity Administrator Product Guide: https://lenovopress.com/tips1200-lenovo-xclarity-administrator

Lenovo XClarity Essentials

Lenovo offers the following XClarity Essentials software tools that can help you set up, use, and maintain the server at no additional cost:

- Lenovo Essentials OneCLI

  OneCLI is a collection of server management tools that uses a command line interface program to manage firmware, hardware, and operating systems. It provides functions to collect full system health information (including health status), configure system settings, and update system firmware and drivers.

- Lenovo Essentials UpdateXpress

  The UpdateXpress tool is a standalone GUI application for firmware and device driver updates that enables you to maintain your server firmware and device drivers up-to-date and help you avoid unnecessary server outages. The tool acquires and deploys individual updates and UpdateXpress System Packs (UXSPs) which are integration-tested bundles.

- Lenovo Essentials Bootable Media Creator

  The Bootable Media Creator (BOMC) tool is used to create bootable media for offline firmware update.

For more information and downloads, visit the Lenovo XClarity Essentials web page:
http://support.lenovo.com/us/en/documents/LNVO-center

Lenovo XClarity Energy Manager

Lenovo XClarity Energy Manager (LXEM) is a power and temperature management solution for data centers. It is an agent-free, web-based console that enables you to monitor and manage power consumption and temperature in your data center through the management console. It enables server density and data center capacity to be increased through the use of power capping.

LXEM is a licensed product. A single-node LXEM license is included with the XClarity Controller Enterprise upgrade as described in the Remote Management section. If your server does not have the XCC Enterprise upgrade, Energy Manager licenses can be ordered as shown in the following table.

Table 35. Lenovo XClarity Energy Manager

Part number	Description
4L40E51621	Lenovo XClarity Energy Manager Node License (1 license needed per server)

For more information about XClarity Energy Manager, see the following resources:

- Lenovo Support page:
  https://datacentersupport.lenovo.com/us/en/solutions/lnvo-lxem
- User Guide for XClarity Energy Manager:
  https://pubs.lenovo.com/lxem/

Lenovo Capacity Planner

Lenovo Capacity Planner is a power consumption evaluation tool that enhances data center planning by enabling IT administrators and pre-sales professionals to understand various power characteristics of racks, servers, and other devices. Capacity Planner can dynamically calculate the power consumption, current, British Thermal Unit (BTU), and volt-ampere (VA) rating at the rack level, improving the planning efficiency for large scale deployments.

For more information, refer to the Capacity Planner web page:
http://datacentersupport.lenovo.com/us/en/solutions/lnvo-lcp

Security

The SE350 offers a number of security features, both electronic and physical.

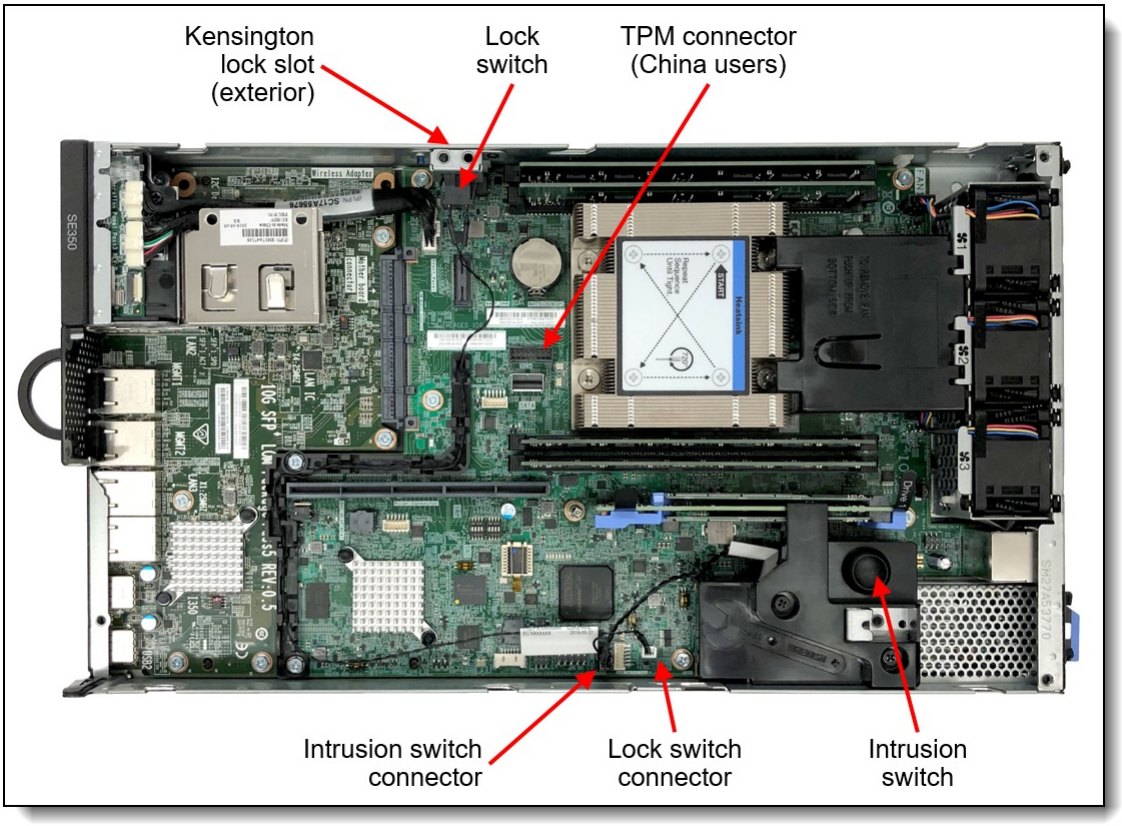

Figure 17. Security features of the SE350

Physical security features:

- Intrusion detection

  The server has an intrusion switch that rests against the server cover. In the event that the cover is removed, the event is recorded and actions can be taken to secure the server. The intrusion switch is standard.

- Motion detection

  The server has an onboard G-sensor accelerometer (disabled by default) that will generate an event if the server is moved. As part of the setup process in XCC, you specify the orientation of the server - desktop, ceiling, wall mount, angled in the bookshelf mount. You can also specify the sensitivity of the motion detection. The motion detection feature is standard.

- Support for a Kensington lock and cable

  The server has a slot on the side of the server which a customer-supplied Kensington lock and cable can be attached to, to help prevent theft of the server.

- Intrusion arm/disarm feature

  The Kensington cable slot can also double as an electronic switch to disarm the intrusion switch detection, so that authorized servicing of the hardware can be performed without triggering the security actions. Available as the ThinkSystem SE350 Anti-Tampering Keylock Kit (CTO only). The kit includes a Kensington lock (without cable) that is attached to the outside of the server.

  Note: This intrusion arm/disarm feature is not supported with the 1U or 2U rack enclosure mounting options, due to physical restrictions with the Kensington lock.

- Front bezel with key lock

  Optional component that mounts on the front of the server that restricts access to networking connectors on the front of the server. See Mounting components for more information.

Electronic security features include:

- Automatic actions on tamper detection

  In the event of an intrusion or movement, the server can be configured in XCC to perform actions, including server shutdown and disabling remote access to the XCC from the network ports (referred to as the BMC network bridge).

- Self-encrypting (SED) M.2 drives that ensure data is secured when the drives are powered off
- Administrator password and a power-on password in UEFI
- Onboard Trusted Platform Module (TPM) supporting TPM 2.0 enables advanced cryptographic functionality in the operating system and applications.
- For China users, the server has an internal TCM port that supports a Nationz TPM 2.0 module. Available CTO only.

The server is NIST SP 800-147B compliant.

Ordering information for the security components is listed in the following table.

Table 36. Security components

Part number	Feature code	Description
CTO only	B6Q2	ThinkSystem SE350 Anti-Tampering Keylock Kit • Internal lock mechanism with electronic switch • Cable and routing tray • Kensington lock with key
4M17A37599	B6GD	ThinkSystem SE350 Sleeve Locking Bezel with Dust Filter Holders (see Mounting components) • Locking security bezel with key • Dust filter holders
CTO only	B22N*	ThinkSystem Nationz Trusted Platform Module v2.0

* Not supported in China

Security Pack

The Security Pack is the collection of security and activation features of the SE350:

- Unique tamper detection (such as G-sensor) and Automatic actions on tamper detection
- Enablement of local Self-encrypting (SED) authentication key (AK) management
- Mandatory claiming and activation process to identify the owner of SE350 when the server is first delivered/powered on

For new configurations created in DCSC, these features will be enabled by default. To disable them, you will need to select the feature code in the Security tab in DCSC as listed in the following table. All SE350 preconfigured models, as listed in the Models section, have the SE350 Security Pack enabled.

Table 37. Security Pack ordering information

Feature code	Description
BLZ2	ThinkEdge Security Pack Enabled (default)
BKFC	ThinkEdge Security Pack Disabled

Notes:

- The Security Pack features setting cannot be changed after the system leaves the factory. For example, if you select feature BLZ2 to enable the Security Pack features, then the system will *require* activation before it can be first used. Similarly, if your system was configured in the factory with Security Pack disabled, you cannot enable it at a later time.
- Customers can use the ThinkShield Portal to determine which of their systems have Security Pack enabled or disabled (you will see "Standard" if the system has Security Pack disabled).

Intel Transparent Supply Chain

Add a layer of protection in your data center and have peace of mind that the server hardware you bring into it is safe authentic and with documented, testable, and provable origin.

Lenovo has one of the world's best supply chains, as ranked by Gartner Group, backed by extensive and mature supply chain security programs that exceed industry norms and US Government standards. Now we are the first Tier 1 manufacturer to offer Intel® Transparent Supply Chain in partnership with Intel, offering you an unprecedented degree of supply chain transparency and assurance.

To enable Intel Transparent Supply Chain for the Intel-based servers in your order, add the following feature code in the DCSC configurator, under the Security tab.

Table 38. Intel Transparent Supply Chain ordering information

Feature code	Description
BB0P	Intel Transparent Supply Chain

For more information on this offering, see the paper *Introduction to Intel Transparent Supply Chain on Lenovo ThinkSystem Servers*, available from https://lenovopress.com/lp1434-introduction-to-intel-transparent-supply-chain-on-thinksystem-servers.

Mounting options

The SE350 is designed to be used in a variety of locations -- wall, ceiling, bookshelf, table top -- as well as in a rack.

In this section:

- Mounting components - Node sleeve
- Locking bezel
- Desktop mount
- Stacked mount
- Bookshelf mount
- Wall or ceiling mount
- 1U rack installation
- Short-depth 2U rack installation
- Short-depth 1U rack installation for Telco

For additional information on Bookshelf, DIN Rail and Wall-Mount installation, see the Configuration Installation Guide:
https://thinksystem.lenovofiles.com/help/topic/SE350/SE350_configuration_guide.pdf

Mounting components - Node sleeve

The node sleeve, shown below, holds the SE350 server when mounted on the wall or connected to other SE350 servers. Multiple SE350 servers can be connected together -- the node sleeves are clipped together and then secured using thumbscrews. The servers are then slid into the node sleeves and secured with additional thumbscrews.

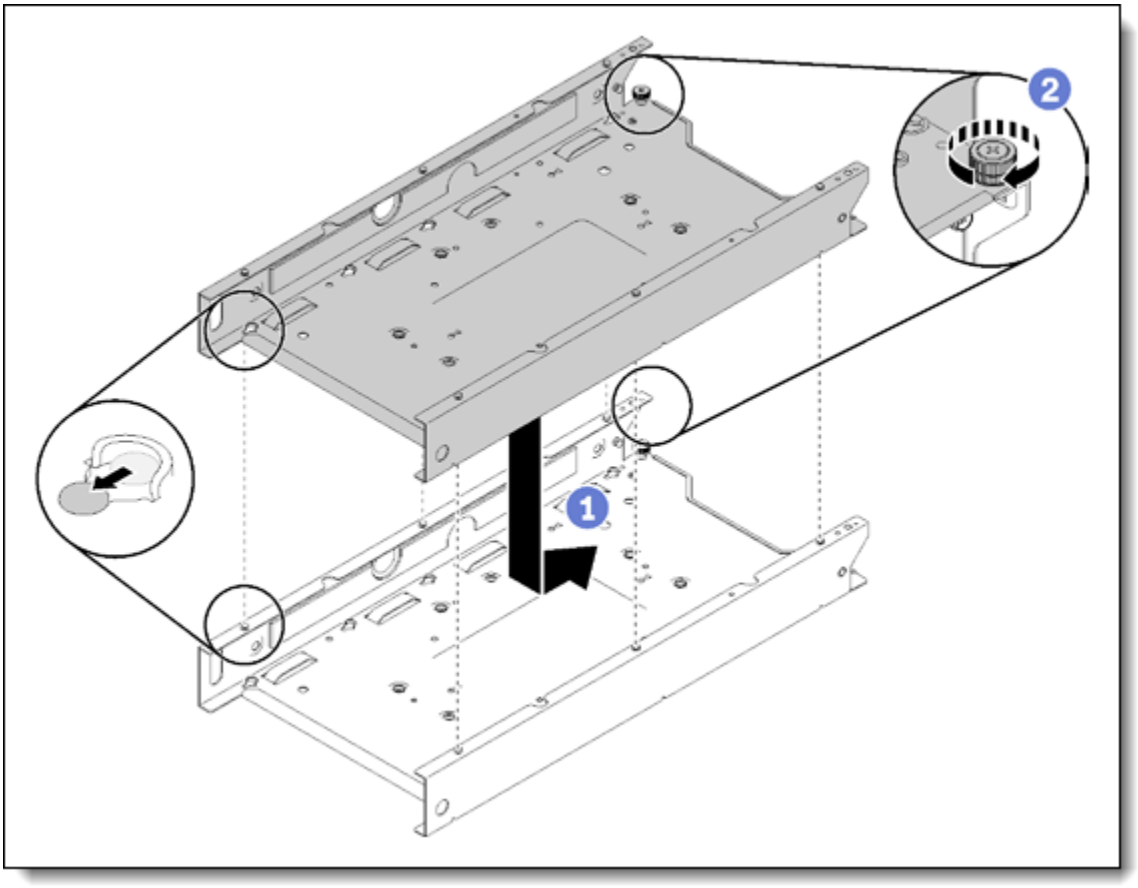

Figure 18. Attaching two node sleeves together

The node sleeve has the following dimensions:

- Length: 423 mm
- Width: 223 mm
- Depth: 52 mm

Table 39. Node Sleeve ordering information

Part number	Feature code	Description	Quantity required
4M17A37607	B6EZ	ThinkSystem SE350 Node Sleeve	1 per server

Locking bezel

The locking bezel (4M17A37599) is an optional component that mounts on the front of the node sleeve to help prevent physical access to the front components of the server. The bezel includes a lock-and-key mechanism for security. The bezel also includes two brackets that are used to hold the optional dust filters (4M17A37602). The brackets and filters cover the PCIe slot area and the network area to reduce the dust that can enter the server through the front air holes.

Tip: The use of the locking bezel requires a node sleeve.

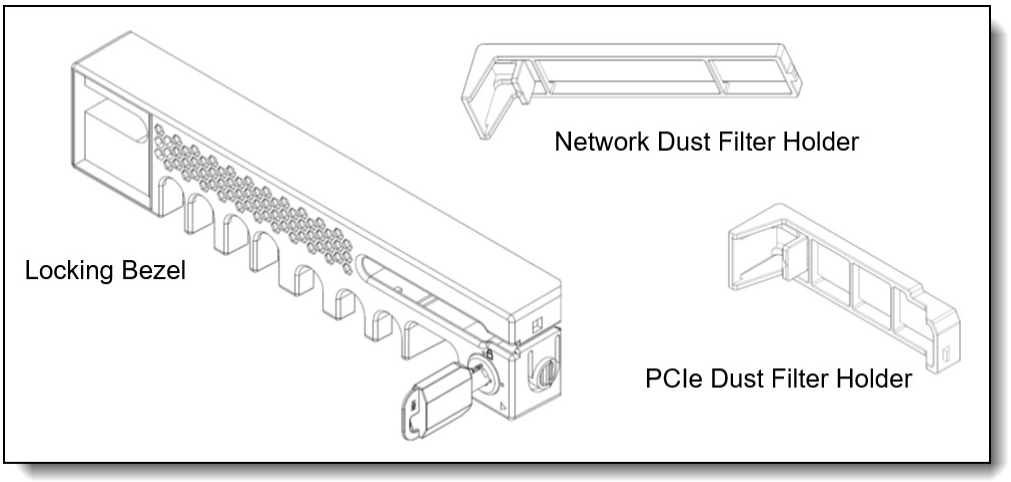

Figure 19. Locking Bezel and Filter Holders (4M17A37599)

Table 40. Locking bezel ordering information

Part number	Feature code	Description	Quantity required
4M17A37599	B6GD	ThinkSystem SE350 Sleeve Locking Bezel with Dust Filter Holders • Locking bezel with key • Dust filter holder for the area above the network ports • Dust filter holder for PCIe slot area	Optional, 1 per server
4M17A37602	B6KU	ThinkSystem SE350 Locking Bezel Dust Filter • 1x 5mm foam dust filter for network filter holder • 1x 5mm foam dust filter for PCIe filter holder	Optional, 1 per server

Desktop mount

Desktop mounting has the server oriented horizontally with self-adhesive rubber pads mounted to its underside.

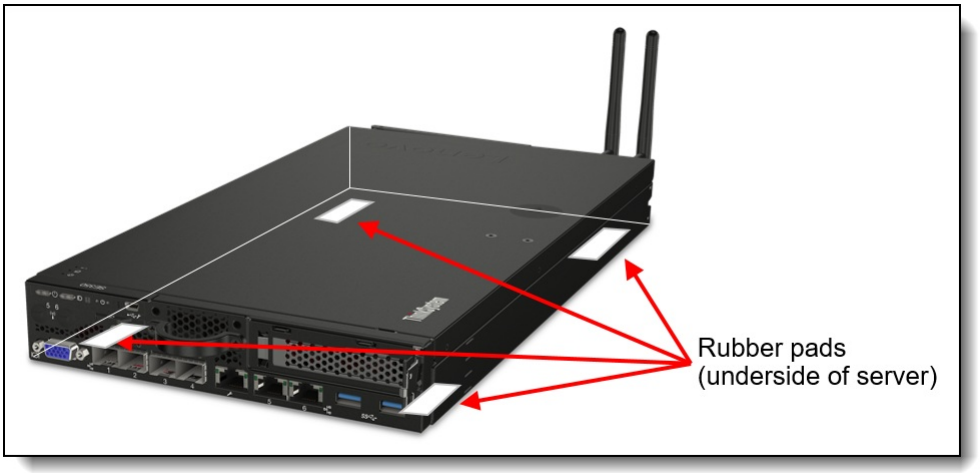

Figure 20. SE350 with Rubber Feet option

The rubber feet are included with the Node Sleeve, 4M17A37607, but are also orderable separately as listed in the following table.

Table 41. Desktop mount components

Part number	Feature code	Description	Quantity required
4M17A37610	B6Q3	ThinkSystem SE350 Rubber Feet (contains 4 rubber pads) (also included in the Node Sleeve, 4M17A37607)	1

Stacked mount

Multiple SE350 servers can be each installed into a node sleeve and then stacked horizontally up to 3 high. The node sleeves are secured together using thumbscrews. The bottom node sleeve has rubber feet mounted to its underside.

The components needed for the stacked mount are shown in the following table. See the Mounting components section for details about the node sleeve and locking bezel.

Table 42. Stacked mount components

Part number	Feature code	Description	Quantity required
4M17A37607	B6EZ	ThinkSystem SE350 Node Sleeve (includes 4 rubber pads)	1 per server
4M17A37599	B6GD	ThinkSystem SE350 Sleeve Locking Bezel with Dust Filter Holders	Optional, 1 per server
4M17A37602	B6KU	ThinkSystem SE350 Locking Bezel Dust Filter	Optional, 1 per server

Bookshelf mount

The bookshelf mount allows up to 3 servers to be mounted vertically and placed like books on a shelf, desk or other flat surface. The servers are angled up at the front for easy access. Three nodes, with optional locking bezels, as shown in the bookshelf mount in the following figure.

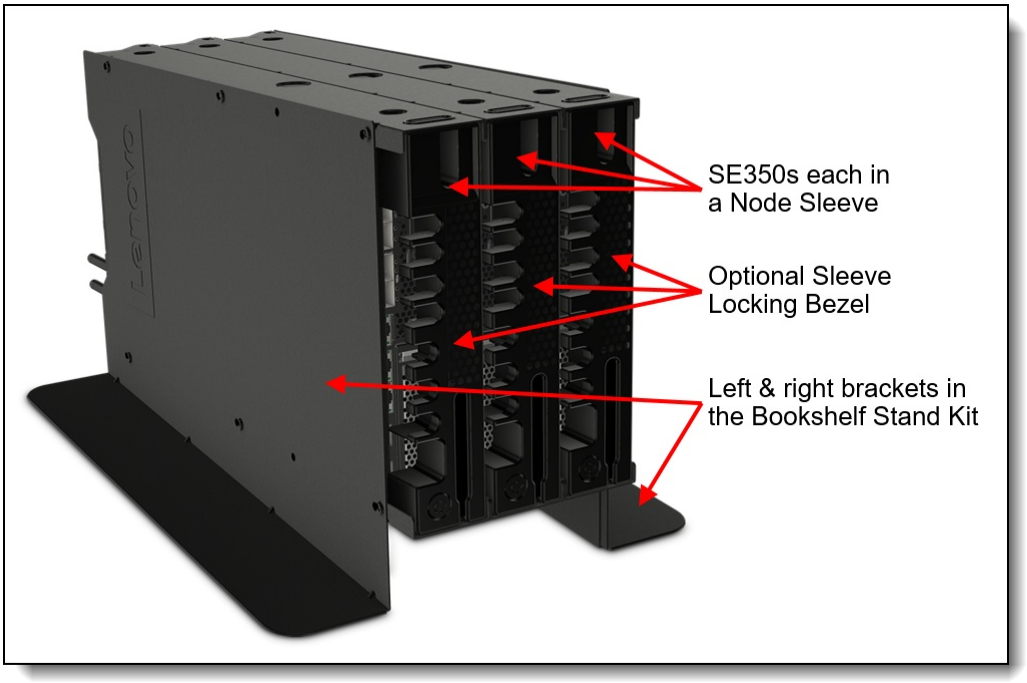

Figure 21. Bookshelf mount (with optional locking bezels)

The components needed for the bookshelf mount are shown in the following table. See the Mounting components section for details about the node sleeve and locking bezel.

Table 43. Bookshelf mount components

Part number	Feature code	Description	Quantity required
4M17A37608	B6G8	ThinkSystem SE350 Bookshelf Stand Kit (contains left and right brackets)	1
4M17A37607	B6EZ	ThinkSystem SE350 Node Sleeve	1 per server
4M17A37599	B6GD	ThinkSystem SE350 Sleeve Locking Bezel with Dust Filter Holders	Optional, 1 per server
4M17A37602	B6KU	ThinkSystem SE350 Locking Bezel Dust Filter	Optional, 1 per server

Wall or ceiling mount

The SE350 can be mounted on a wall or the ceiling, using the node sleeve. When wall mounted, the node sleeve can be mounted directly on the wall or onto a DIN rail. The server is then installed in the sleeve.

The components needed for a wall or ceiling mount are shown in the following table. See the Mounting components section for details about the node sleeve and locking bezel.

Table 44. Wall or ceiling mount

Part number	Feature code	Description	Quantity required
4M17A37607	B6EZ	ThinkSystem SE350 Node Sleeve	1 per server
4M17A37601	B6F0	ThinkSystem SE350 AC Adapter Bracket	1 per server
4M17A37600	B6F1	ThinkSystem SE350 DIN Rail Kit (contains two brackets)	Optional, for DIN rail only, 1 per server
4M17A37285	B87S	ThinkSystem SE350 DIN Mount Kit (Extreme Shock & Vibe) (ruggedized, contains two brackets)	Optional, for DIN rail only, 1 per server
4M17A37599	B6GD	ThinkSystem SE350 Sleeve Locking Bezel with Dust Filter Holders	Optional, 1 per server
4M17A37602	B6KU	ThinkSystem SE350 Locking Bezel Dust Filter	Optional, 1 per server

The DIN Rail Kit contains two brackets, as shown in the following figure.

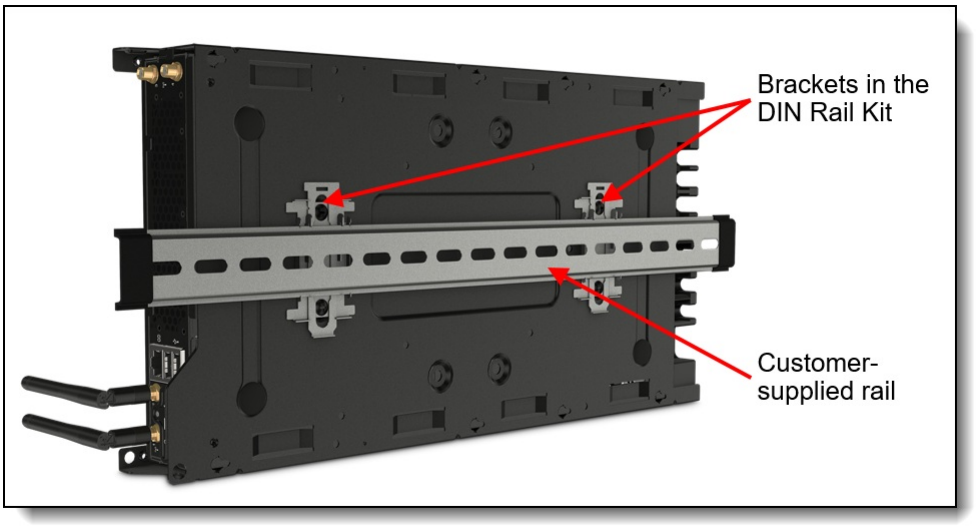

Figure 22. DIN Rail Kit

Each DIN rail clamp has the following dimensions:

- Width: 41 mm
- Height: 91 mm
- Thickness: 17 mm (the depth that the clamp adds when the node sleeve is attached to the DIN rail)

The AC Adapter Bracket houses the two AC adapters for the SE350 server, as shown in the following figure.

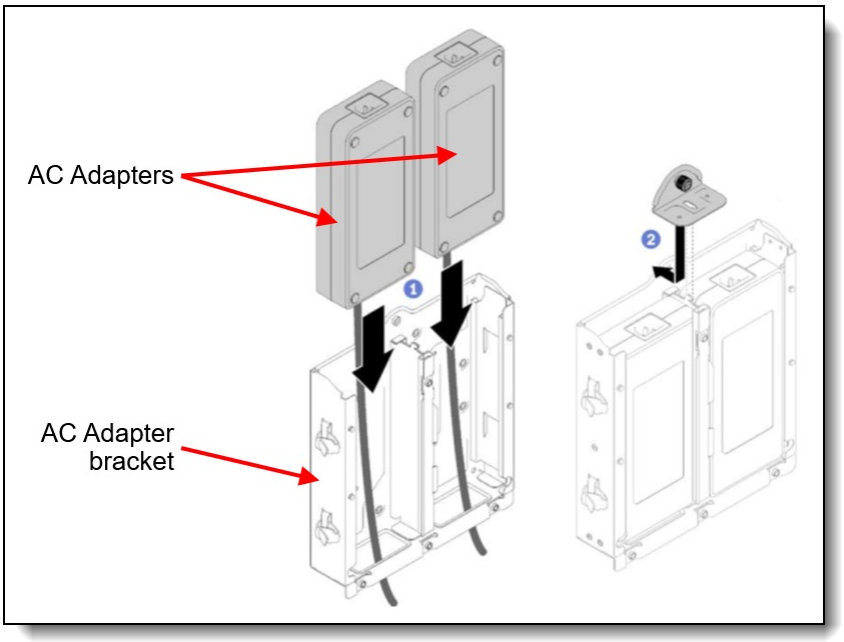

Figure 23. AC Adapter Bracket

The AC Adapter Bracket has the following dimensions:

- Width: 223 mm
- Length: 248 mm
- Thickness: 46 mm

When mounting on a DIN rail, the AC Adapter Bracket and Node Sleeve can be mounted side by side, or they can be mounted one on top of the other, where the AC Adapter Bracket attaches to the DIN rail, and the Node Sleeve mounts to the AC Adapter Bracket.

1U rack installation

Two SE350 servers and the four companion AC Adapter power supplies can be mounted in a 1U space in a rack server. The components are mounted in the ThinkSystem E1 Enclosure, machine type 7D1R.

Notes:

- The E1 Enclosure is available in DCSC using CTO base model 7D1RCTO1WW
- In some markets the enclosure may also be available as a preconfigured model
- The Wireless Network Module is not supported as there is insufficient physical space for the antennas
- The E1 Enclosure comes with two node fillers to ensure correct airflow if a node space is not populated

The following figure shows two SE350 servers installed in the E1 Enclosure.

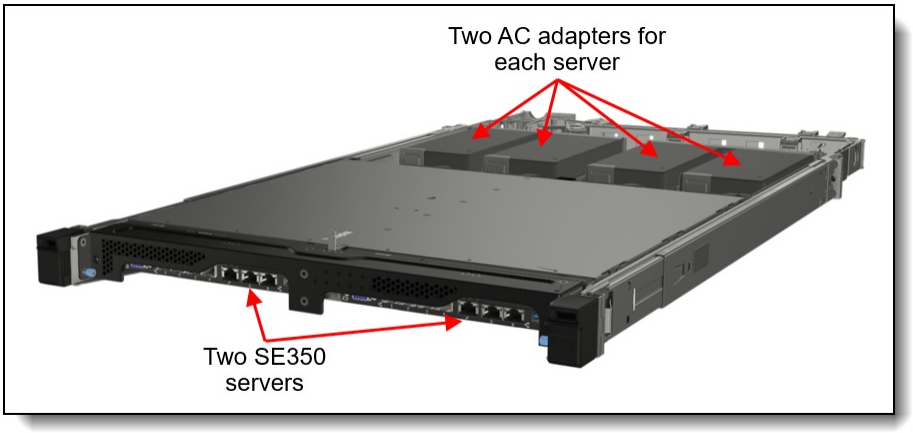

Figure 24. ThinkSystem E1 Enclosure

The following figure shows the components used in the 1U rack installation.

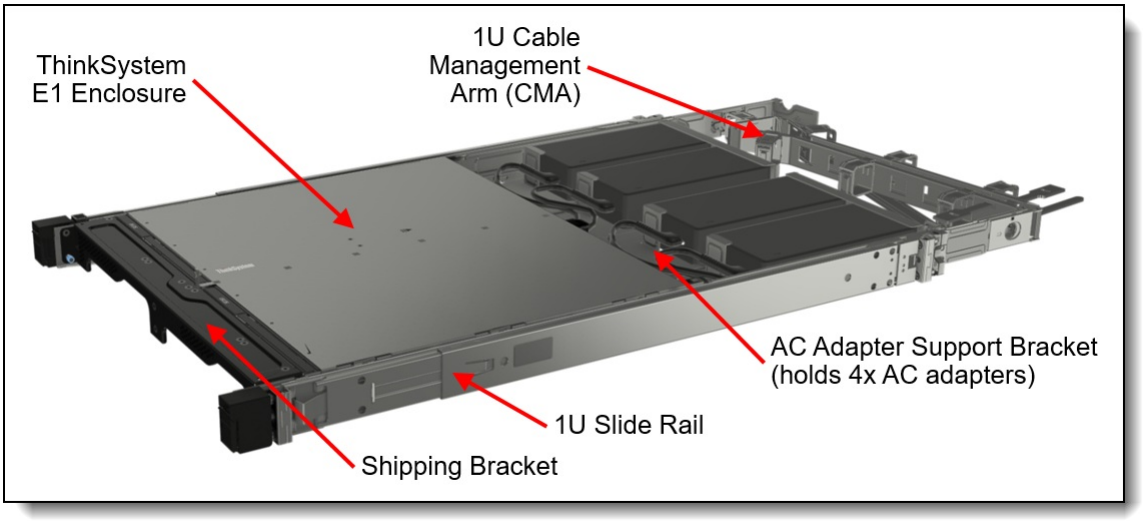

Figure 25. ThinkSystem E1 Enclosure components

The following table lists the components used in the 1U rack installation.

Tip: The top cover of the SE350 is removed before installing the server in the enclosure.

Table 45. Components for the E1 Enclosure

Part number	Feature code	Description	Quantity required
Toolless Slide Rail Kit and CMA			
4M17A11683	7D1R AVAL	1U and 2U Slide Rail	1 per Enclosure
CTO/model only*	7D1R AVAX	CMA (1U)	1 per Enclosure
ThinkSystem E1 Enclosure components			
CTO/model only*	7D1R B6PX	ThinkSystem Enclosure for Mounting SE350 Side by Side in Rack	1 per Enclosure
CTO/model only*	7D1R B6EE	ThinkSystem Enclosure AC Adapter Support Bracket	1 per Enclosure
4M17A37283	B6F2	ThinkSystem Enclosure Front Shipping Bracket ● 1x Front Shipping/Dust Filter Bracket ● 2x Rack Filter Holders	1 per Enclosure
4M17A37284	7D1R B6PY	ThinkSystem Enclosure Rack Dust Filter ● 1x 5mm foam dust filter for network filter holder ● 1x 5mm foam dust filter for PCIe filter holder	1 for each server

* Available via configure-to-order (CTO) or via predefined enclosure models

The following figure shows the components included in the Front Shipping Bracket.

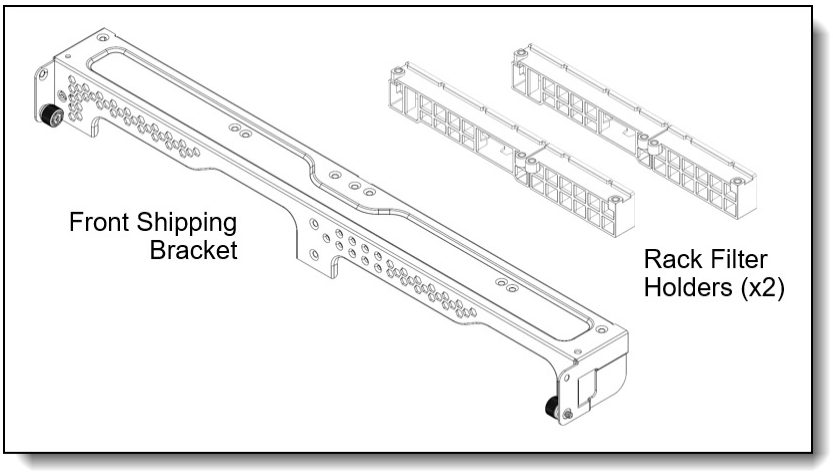

Figure 26. ThinkSystem Enclosure Front Shipping Bracket

The following table summarizes the specifications of the two available rail kits

Table 46. Specifications of rail kit for E1 Enclosure

Feature	Slide Rail Kit
Part number	4M17A11683
CMA	Optional, CTO/model only* (7D1R AVAX)
Rail length	807 mm (31.8 in.)
Rail type	Full-out slide (ball bearing)
Slide travel	810 mm (31.9 in.)

Feature	Slide Rail Kit
Tool-less installation	Yes
In-rack server maintenance	Yes
1U PDU support	Yes
0U PDU support	Yes
Rack type	IBM and Lenovo 4-post, IEC standard-compliant
Mounting holes	Square or round
Mounting flange thickness	2 mm (0.08 in.) – 3.3 mm (0.13 in.)
Max distance between front and rear mounting flanges	864 mm (34.0 in.)

* Available via configure-to-order (CTO) or via predefined enclosure models

Short-depth 2U rack installation

Two SE350 servers and the four companion AC Adapter power supplies can also be mounted in a short-depth rack or a 2-post rack. In such a configuration, the servers occupy 2U of rack space, the two servers in 1U and the AC Adapters mounted in the 1U space above. The components are mounted in the ThinkSystem E2 Enclosure, machine type 7D1R.

Notes:

- The E2 Enclosure is available in DCSC using CTO base model 7D1RCTO2WW
- In some markets the enclosure may also be available as a preconfigured model
- The Wireless Network Module is not supported as there is insufficient physical space for the antennas
- The E2 Enclosure comes with two node fillers to ensure correct airflow if a node space is not populated

The following figure shows two SE350 servers installed in the E2 Enclosure.

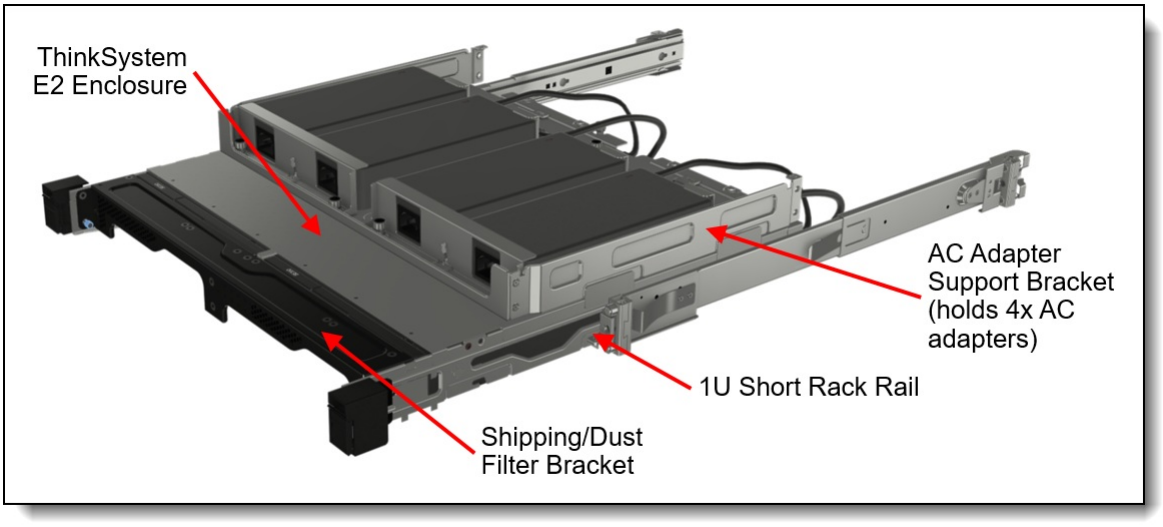

Figure 27. ThinkSystem E2 Enclosure components (rail in open position)

The following table lists the components used in the 1U rack installation.

Tip: The top cover of the SE350 is removed before installing the server in the enclosure.

Table 47. Components for the E2 Enclosure

Part number	Feature code	Description	Quantity required
Rail kit selections (choose 1)			
4XF7A83645	7D1R BS30	ThinkSystem Enclosure Universal Short Rack Rail Kit	1 per enclosure
4M17A37605	7D1R B7L3	ThinkSystem Enclosure Short Rack Rail Kit	1 per enclosure
4M17A37105	7D1R B6H2	ThinkSystem Friction 2-Post Screw-in Rail Kit	1 per enclosure
ThinkSystem E2 Enclosure components			
CTO/model only*	7D1R B6PX	ThinkSystem Enclosure for Mounting SE350 Side by Side in Rack	1 per Enclosure
CTO/model only*	7D1R B6EE	ThinkSystem Enclosure AC Adapter Support Bracket	1 per Enclosure
4M17A37283	7D1R B6F2	ThinkSystem Enclosure Front Shipping Bracket ● 1x Front Shipping/Dust Filter Bracket ● 2x Rack Filter Holders	1 per Enclosure
4M17A37284	7D1R B6PY	ThinkSystem Enclosure Rack Dust Filter ● 1x 5mm foam dust filter for network filter holder ● 1x 5mm foam dust filter for PCIe filter holder	1 for each server

* Available via configure-to-order (CTO) or via predefined enclosure models

The following figure shows the components included in the Front Shipping Bracket.

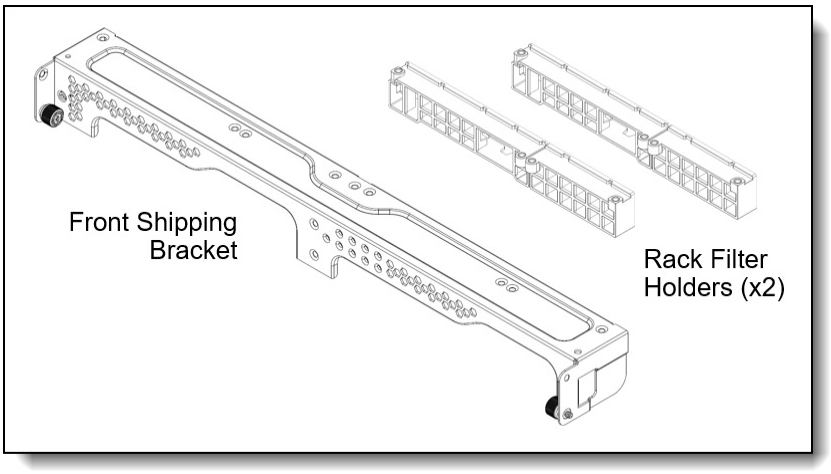

Figure 28. ThinkSystem Enclosure Front Shipping Bracket

The following table summarizes the specifications of the two available rail kits.

Table 48. Specifications of rail kits for short-depth installations

Feature	Universal Short Rack Rail Kit	Short Rack Rail Kit	2-Post Screw-in Rail Kit
Part number	4XF7A83645	4M17A37605	4M17A37105
CMA	None	None	None
Rail length	484 mm (19.1 in.)	484 mm (19.1 in.)	484 mm (19.1 in.)
Rail type	Half-out slide (friction)	Half-out slide (friction)	Half-out slide (friction)

Feature	Universal Short Rack Rail Kit	Short Rack Rail Kit	2-Post Screw-in Rail Kit
Slide travel	270 mm (10.6 in.)	270 mm (10.6 in.)	270 mm (10.6 in.)
Tool-less installation	Yes	Yes	No
In-rack server maintenance	No	No	No
1U PDU support	Yes	Yes	Yes
0U PDU support	Yes	Yes	Not applicable
Rack type	14-inch to 24-inch depth	14-inch to 24-inch depth	2-post, EIA standard-compliant (3-inch to 8-inch)
Mounting holes	Square, round, or threaded	Square or round	Square, round, or threaded
Mounting flange thickness	2 mm (0.08 in.) – 3.3 mm (0.13 in.)	2 mm (0.08 in.) – 3.3 mm (0.13 in.)	2 mm (0.08 in.) – 3.3 mm (0.13 in.)
Max distance between front and rear mounting flanges	609 mm (24 in.)	609 mm (24 in.)	Not applicable

Short-depth 1U rack installation for Telco

For Telco customers that have a -48V DC power source in their installations, the two SE350 servers can be mounted in a 1U short-depth rack or a 2-post rack. The components are mounted in the ThinkSystem E2 Enclosure, machine type 7D1R. In such a configuration, no AC adapters are needed.

Notes:

- The E2 Enclosure is available in DCSC using CTO base model 7D1RCTO2WW
- In some markets the enclosure may also be available as a preconfigured model
- The Wireless Network Module is not supported as there is insufficient physical space for the antennas
- The E2 Enclosure comes with two node fillers to ensure correct airflow if a node space is not populated

The following figure shows two SE350 servers installed in the enclosure without AC adapters.

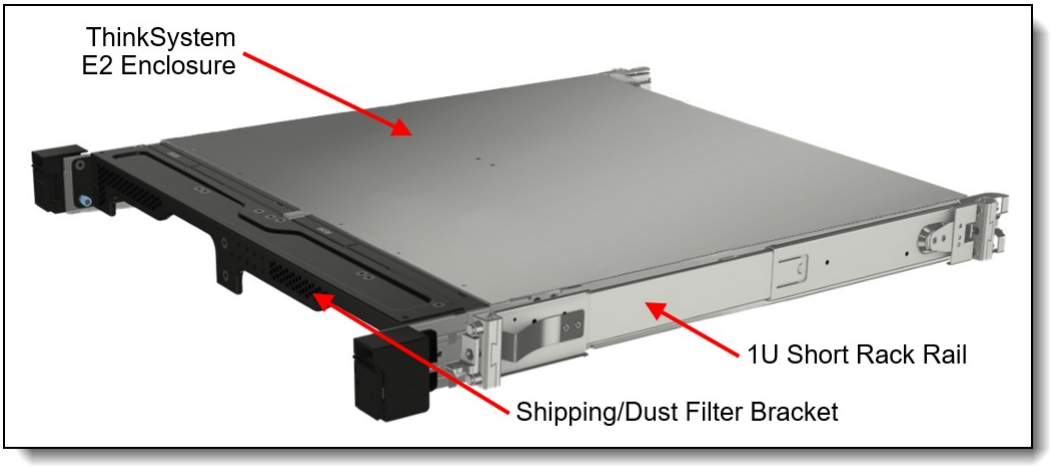

Figure 29. ThinkSystem E2 Enclosure with a short rail kit (rail in closed position)

The following table lists the components used in the 1U rack installation.

Tip: The top cover of the SE350 is removed before installing the server in the enclosure.

Table 49. Components for the E2 Enclosure

Part number	Feature code	Description	Quantity required
Rail kit selections (choose 1)			
4XF7A83645	7D1R BS30	ThinkSystem Enclosure Universal Short Rack Rail Kit	1 per enclosure
4M17A37605	7D1R B7L3	ThinkSystem Enclosure Short Rack Rail Kit	1 per enclosure
4M17A37105	7D1R B6H2	ThinkSystem Friction 2-Post Screw-in Rail Kit	1 per enclosure
Enclosure components			
CTO/model only*	7D1R B6PX	ThinkSystem Enclosure for Mounting SE350 Side by Side in Rack	1 per Enclosure
4M17A37283	7D1R B6F2	ThinkSystem Enclosure Front Shipping Bracket • 1x Front Shipping/Dust Filter Bracket • 2x Rack Filter Holders	1 per Enclosure
4M17A37284	7D1R B6PY	ThinkSystem Enclosure Rack Dust Filter • 1x 5mm foam dust filter for network filter holder • 1x 5mm foam dust filter for PCIe filter holder	1 for each server

* Available via configure-to-order (CTO) or via predefined enclosure models

Specifications for the supported rail kits are listed in the rail kit table in the preceding section.

Operating system support

The SE350 supports the following operating systems:

- Microsoft Windows Server 2016
- Microsoft Windows Server 2019
- Microsoft Windows Server 2022
- Microsoft Windows Server 2025
- Red Hat Enterprise Linux 7.6
- Red Hat Enterprise Linux 7.7

- Red Hat Enterprise Linux 7.8
- Red Hat Enterprise Linux 7.9
- Red Hat Enterprise Linux 8.1
- Red Hat Enterprise Linux 8.2
- Red Hat Enterprise Linux 8.3
- Red Hat Enterprise Linux 8.4
- Red Hat Enterprise Linux 8.5
- Red Hat Enterprise Linux 8.6
- Red Hat Enterprise Linux 8.7
- Red Hat Enterprise Linux 8.8
- Red Hat Enterprise Linux 9.0
- Red Hat Enterprise Linux 9.1
- Red Hat Enterprise Linux 9.2
- Red Hat Enterprise Linux 9.5
- Red Hat Enterprise Linux 9.6
- SUSE Linux Enterprise Server 15
- SUSE Linux Enterprise Server 15 SP1
- SUSE Linux Enterprise Server 15 SP2
- SUSE Linux Enterprise Server 15 SP3
- SUSE Linux Enterprise Server 15 SP4
- SUSE Linux Enterprise Server 15 SP5
- SUSE Linux Enterprise Server 15 Xen
- SUSE Linux Enterprise Server 15 Xen SP1
- SUSE Linux Enterprise Server 15 Xen SP2
- SUSE Linux Enterprise Server 15 Xen SP3
- SUSE Linux Enterprise Server 15 Xen SP4
- SUSE Linux Enterprise Server 15 Xen SP5
- Ubuntu 18.04 LTS 64-bit
- Ubuntu 20.04 LTS 64-bit
- Ubuntu 22.04 LTS 64-bit
- VMware ESXi 6.5 U2
- VMware ESXi 6.5 U3
- VMware ESXi 6.7 U2
- VMware ESXi 6.7 U3
- VMware ESXi 7.0
- VMware ESXi 7.0 U1
- VMware ESXi 7.0 U2
- VMware ESXi 7.0 U3
- VMware ESXi 8.0
- VMware ESXi 8.0 U1
- VMware ESXi 8.0 U2

The SE350 is also tested with Windows 10.

For a complete list of supported, certified and tested operating systems, plus additional details and links to relevant web sites, see the Operating System Interoperability Guide:
https://lenovopress.com/osig#servers=se350-7z46-7d1x

For configure-to-order configurations, the SE350 can be preloaded with VMware ESXi. Ordering information is listed in the following table.

Table 50. VMware ESXi preload

Part number	Feature code	Description
CTO only	B3VW	VMware ESXi 6.5 U2 (Factory Installed)
CTO only	B6U1	VMware ESXi 6.7 U2 (factory installed)
CTO only	BHSR	VMware ESXi 7.0 U2 (Factory Installed)
CTO only	BMT5	VMware ESXi 8.0 (Factory Installed)
CTO only	BQ8S	VMware ESXi 8.0 U1 (Factory Installed)

Configuration rule:

- An ESXi preload cannot be selected if the configuration includes an NVIDIA GPU (ESXi preload cannot include the NVIDIA driver)

You can download supported VMware vSphere hypervisor images from the following web page and install it using the instructions provided:
https://vmware.lenovo.com/content/custom_iso/

Hyperconverged infrastructure support

Lenovo ThinkEdge systems can be used in hyperconverged solutions either as part of a Lenovo configured and optimized Lenovo ThinkAgile solution, or as a user-configured system.

Refer to the following links for full details.

VMware vSAN

SE350 supports vSAN OSA. For more information refer to this page:
vSAN Original Storage Architecture (OSA)

Microsoft Azure Local

SE350 is the base hardware for the ThinkAgile MX1020 Appliance and and MX1021 Certified Node. For more information refer to the product guide:
https://lenovopress.lenovo.com/lp1296-thinkagile-mx1020-mx1021-azure-stack-hci

MX1020 is listed in Microsoft Azure Local catalog. For more information refer to this page:
https://azurestackhcisolutions.azure.microsoft.com/#/catalog/details/ac515a44-99ca-4e4e-bc27-87a74d3080b2

MX1021 is listed in Microsoft Azure Local catalog. For more information refer to this page:
https://azurestackhcisolutions.azure.microsoft.com/#/catalog/details/847facc5-74d9-4174-a623-9b43f54e2aae

Nutanix

SE350 is the base hardware for ThinkAgile HX1021 Certified Node. For more information refer to the HX1021 product guide:
https://lenovopress.lenovo.com/lp1384-lenovo-thinkagile-hx1021-certified-node

Physical and electrical specifications

Dimensions and weight of the SE350 server:

- Height 43 mm (1.7 in.)
- Width: 209 mm (8.2 in.)
- Depth: 376 mm (14.8 in.)
- Maximum weight: 3.6 kg (7.9 lbs)

Dimensions and weight of the E1 Enclosure (without CMA and front bracket):

- Height: 43 mm (1.7 in.)
- Width: 434 mm (17.1 in.)
- Depth: 736 mm (29.0 in.)
- Weight: 10 kg (with 2 power supplies), 15 kg (with 4 power supplies)

Dimensions and weight of the E2 Enclosure (without front bracket):

- Height: 87 mm (3.4 in.)
- Width: 434 mm (17.1 in.)
- Depth: 441 mm (17.3 in.)
- Weight: 10 kg (with 2 power supplies), 15 kg (with 4 power supplies)

The shipping (cardboard packaging) dimensions of the SE350 are as follows:

- Width: 338 mm (13.3 inches)
- Height: 179 mm (7.0 inches)
- Depth: 569 mm (22.4 inches)

The shipping (cardboard packaging) dimensions of the SE350 1U Enclosure are as follows:

- Width: 587 mm (23.1 inches)
- Height: 225 mm (8.9 inches)
- Depth: 998 mm (39.3 inches)

Electrical specifications:

- Electrical Input - 12V AC Adapters
  - 100 to 127 (nominal) V AC, 50 Hz or 60 Hz, 3.2 A
  - 200 to 240 (nominal) V AC, 50 Hz or 60 Hz, 1.6 A
- Electrical Input - -48V DC
  - -40.8 to -72 VDC, 8.4A

Operating environment

The ThinkSystem SE350 complies with ASHRAE A4 specifications 5°C to 45°C (41°F to 113°F). System performance may be impacted when operating temperature is outside ASHRAE A4 specification or in the event of a fan failure.

Topics in this section:

- Temperature and humidity
- Heat output
- Acoustical noise emissions
- Shock and vibration
- Particulate contamination
- Dust filter
- Replacement port dust covers
- Coin battery

Temperature and humidity

The server is supported in the following environment:

- Air temperature:
  - Operating: ASHRAE Class A4: 5°C to 45°C (41°F to 113°F); the maximum ambient temperature decreases by 1°C for every 125 m (410 ft) increase in altitude above 900 m (2,953 ft).
  - Server off: 5°C to 45°C (41°F to 113°F)
  - Shipment/storage: -40°C to 60°C (-40°F to 140°F)
  - With the following configuration restrictions, the SE350 can operate 0°C to 55°C ambient temperature:
    - No GPU
    - No Micron M.2 drives or the 128 GB M.2 drive; only P4511 and A600i Industrial M.2 drives supported
- Maximum altitude: 3,050 m (10,000 ft)
- Relative Humidity (non-condensing):
  - Operating: ASHRAE Class A4: 8% to 90%; maximum dew point: 24°C (75°F)
  - Shipment/storage: 8% to 90%
  - Non-operating (unpacked) storage: 5% to 95% at 38.7°C (101.7°F) maximum dry-bulb temperature for 48 hrs.

Heat output

The server generates the following heat:

- Heat/thermal output:
  - Minimum configuration: 287 BTU per hour (84 watts)
  - Maximum configuration: 783 BTU per hour (229 watts)

Acoustical noise emissions

The server has the following acoustic noise emissions declaration:

- Sound power level (L_{WAd}):
  - Idling: 4.6 Bel (typical), 5.4 Bel (maximum)
  - Operating: 5.3 Bel (typical), 6.5 Bel (maximum)
- Sound pressure level (L_{pAm}):
  - Idling: 34 dBA (typical), 41 dBA (maximum)
  - Operating: 40 dBA (typical), 51 dBA (maximum)

Notes:

1. These sound levels were measured in controlled acoustical environments according to procedures specified by ISO7779 and are reported in accordance with ISO 9296.
2. The declared acoustic sound levels are based on specified configurations, which may change slightly depending on configuration/conditions, for example GPU cards such as the NVIDIA T4.

Shock and vibration

The server has the vibration and shock limits listed in the following table for when the server is in operation. The terms "left wing" and "right wing" in the table refer to the two sides of the riser card as described in the I/O expansion section.

Table 51. Vibration and shock values - server operation

Riser configuration			
Left wing	**Right wing**	**Vibration limit**	**Shock limit**
SATA	Empty	3.0 G rms, 3-500 Hz, 60 min/axis	30 G, 11ms, half-sine, or 40 G, 6ms ±X, ±Y, ±Z
SATA	GPU	3.0 G rms, 3-500 Hz, 60 min/axis	30 G, 11ms, half-sine, or 40 G, 6ms ±X, ±Y, ±Z
NVMe	NVMe	3.0 G rms, 3-500 Hz, 60 min/axis	30 G, 11ms, half-sine, or 40 G, 6ms ±X, ±Y, ±Z
NVMe	GPU	3.0 G rms, 3-500 Hz, 60 min/axis	30 G, 11ms, half-sine, or 40 G, 6ms ±X, ±Y, ±Z

Non-operation shock & vibration data is as follows:

- Vibration, non-operating:
  - Single SE350 server: 7.7 G rms at 20 - 2000 Hz for 60 minutes across 6 surfaces
  - Rack installation: 1.04 G rms at 2 - 200 Hz for 15 minutes across 6 surfaces
- Shock, non-operating:
  - Single SE350 server:
    - 50 G for 11ms, square wave, in each direction (±X, ±Y, ±Z axes)
  - Rack installation:
    - 0-4 kg: 50 G for 180 in./sec velocity change across 6 surfaces
    - 4-12 kg: 50 G for 167 in./sec velocity change across 6 surfaces
    - 12-23 kg: 50 G for 152 in./sec velocity change across 6 surfaces
    - 23-32 kg: 35 G for 152 in./sec velocity change across 6 surfaces
    - 32-69 kg: 35 G for 136 in./sec velocity change across 6 surfaces
    - 69-107 kg: 25 G for 118 in./sec velocity change across 6 surfaces

For CTO orders, specify the operational temperature requirement and the shock & vibration requirement, by selecting the feature codes listed in the following table. Selecting the higher temperature and shock/vibration values will ensure the correct heat/vibration tolerant components are selected.

Table 52. Environmental requirements for CTO orders

Feature code	Description
Operational temperature selections	
B8ZT	Operational Temperature 0-45°C
B8ZU	Operational Temperature 0-55°C
Shock & Vibration selections	
B8ZR	Standard Shock & Vibration (15G & .21Grms) ● Shock: 15 G, 11ms, half-sine, ±X, ±Y, ±Z ● Vibration: 0.21 G rms, 3-500 Hz, 30 mins/axis
B8ZQ	High Shock & Vibration (30G & 3Grms) ● Shock: 30 G, 11ms, half-sine, ±X, ±Y, ±Z ● Vibration: 3.0 G rms, 3-500 Hz, 15 mins/axis
BCDN	Extreme Shock & Vibration (40G & 3Grms) ● Shock: 40 G, 6ms, half-sine, ±X, ±Y, ±Z ● Shock: 30 G, 11ms, half-sine, ±X, ±Y, ±Z ● Vibration: 3.0 G rms, 3-500 Hz, 60 mins/axis

The following table indicates what environmental conditions (ambient temperature as well as shock & vibration) are supported with the M.2 drives and GPUs.

Table 53. Drive and GPU support based on environmental selections (shock/vibration and ambient temperature)

Part number	Description	Std S&V* + 45°C	Std S&V* + 55°C	High S&V* + 45°C	High S&V* + 55°C	Extreme S&V* +45°C	Extreme S&V* +55°C
SATA M.2 - Lite-On							
7N47A00130	M.2 128GB SATA 6Gbps NHS SSD	Yes	No	Yes	No	Yes	No
SATA M.2 - Micron 5100							
7SD7A05703	M.2 5100 480GB SATA 6Gbps NHS SSD	Yes	No	Yes	No	Yes	No
4XB7A14048	M.2 5100 960GB SATA 6Gbps NHS SSD	Yes	No	Yes	No	Yes	No
4XB7A39425	M.2 1.92TB 5100 Pro SATA 6Gbps NHS SSD	Yes	No	Yes	No	Yes	No
4XB7A37273	M.2 480GB 5100 Pro SATA 6Gbps NHS SED SSD	Yes	No	Yes	No	Yes	No
4XB7A37274	M.2 960GB 5100 Pro SATA 6Gbps NHS SED SSD	Yes	No	Yes	No	Yes	No
4XB7A37275	M.2 1.92TB 5100 Pro SATA 6Gbps NHS SED SSD	Yes	No	Yes	No	Yes	No
SATA M.2 - Micron 5400							
4XB7A82286	ThinkSystem M.2 5400 PRO 240GB Read Intensive SATA 6Gb NHS SSD	Yes	No	Yes	No	Yes	No

Part number	Description	Std S&V* + 45°C	Std S&V* + 55°C	High S&V* + 45°C	High S&V* + 55°C	Extreme S&V* +45°C	Extreme S&V* +55°C
4XB7A82287	ThinkSystem M.2 5400 PRO 480GB Read Intensive SATA 6Gb NHS SSD	Yes	No	Yes	No	Yes	No
4XB7A82288	ThinkSystem M.2 5400 PRO 960GB Read Intensive SATA 6Gb NHS SSD	Yes	No	Yes	No	Yes	No
SATA M.2 - ATP A600i							
4XB7A39422	M.2 Industrial A600i 120GB SATA SSD	Yes	Yes	Yes	Yes	Yes	Yes
4XB7A39423	M.2 Industrial A600i 480GB SATA SSD	Yes	Yes	Yes	Yes	Yes	Yes
4XB7A39424	M.2 Industrial A600i 800GB SATA SSD	Yes	Yes	Yes	Yes	Yes	Yes
4XB7A37270	M.2 Industrial A600i 120GB SATA SED SSD	Yes	Yes	Yes	Yes	Yes	Yes
4XB7A37271	M.2 Industrial A600i 480GB SATA SED SSD	Yes	Yes	Yes	Yes	Yes	Yes
4XB7A37272	M.2 Industrial A600i 800GB SATA SED SSD	Yes	Yes	Yes	Yes	Yes	Yes
NVMe M.2 - Intel P4511 (drive options include a heatsink)							
4XB7A39426	M.2 650GB P4511 NVMe SED HE SSD	Yes	Yes	No	No	Yes	Yes
4XB7A39427	M.2 1TB P4511 NVMe SED SSD	Yes	Yes	No	No	Yes	Yes
4XB7A39428	M.2 2TB P4511 NVMe SED SSD	Yes	Yes	No	No	Yes	Yes
NVMe M.2 – Micron 7450 PRO and 7450 MAX (with heatsink)							
4XB7A82674	M.2 7450 PRO 960GB Read Intensive NVMe SSD	Yes	No	No	No	Yes	No
4XB7A82675	M.2 7450 PRO 1.92TB Read Intensive NVMe SSD	Yes	No	No	No	Yes	No
4XB7A82852	M.2 7450 PRO 3.84TB Read Intensive NVMe SSD	Yes	No	No	No	Yes	No
4XB7A82676	M.2 7450 MAX 800GB Mixed Use NVMe SSD	Yes	No	No	No	Yes	No
NVMe M.2 – ATP N600Si							
4XB7A64190	ThinkSystem M.2 N600Si 650GB NVMe PCIe 3.0 x4 Non-Hot Swap SSD (Industrial)	Yes	Yes†	Yes	Yes†	Yes	Yes†
4XB7A64203	ThinkSystem M.2 N600Si 960GB NVMe PCIe 3.0 x4 Non-Hot Swap SSD (Industrial)	Yes	Yes†	Yes	Yes†	Yes	Yes†
4XB7A64204	ThinkSystem M.2 N600Si 1.92TB NVMe PCIe 3.0 x4 Non-Hot Swap SSD (Industrial)	Yes	Yes†	Yes	Yes†	Yes	Yes†

Part number	Description	Std S&V* + 45°C	Std S&V* + 55°C	High S&V* + 45°C	High S&V* + 55°C	Extreme S&V* +45°C	Extreme S&V* +55°C
4XB7A82625	ThinkSystem M.2 N600Si 650GB Read Intensive NVMe PCIe 3.0 x4 NHS SSD SED (Industrial)	Yes	Yes†	Yes	Yes†	Yes	Yes†
4XB7A82627	ThinkSystem M.2 N600Si 960GB Read Intensive NVMe PCIe 3.0 x4 NHS SSD SED (Industrial)	Yes	Yes†	Yes	Yes†	Yes	Yes†
4XB7A82628	ThinkSystem M.2 N600Si 1.92TB Read Intensive NVMe PCIe 3.0 x4 NHS SSD SED (Industrial)	Yes	Yes†	Yes	Yes†	Yes	Yes†
GPU							
4X67A14926	NVIDIA Tesla T4 16GB PCIe Passive GPU	Yes	No	Yes	No	Yes	No
4X67A84009	Qualcomm Cloud AI 100	Yes	No	Yes	No	Yes	No
4X67A84824	NVIDIA L4 24GB 72W PCIe Gen4 Passive GPU	Yes	No	Yes	No	Yes	No
4X67A81547**	ThinkSystem NVIDIA A2 16GB PCIe Gen4 Passive GPU w/o CEC	Yes	No	Yes	No	Yes	No

* **Standard S&V** refers to 15G for 11ms shock and 0.21 G vibration for 30 minutes. **High S&V** refers to 30G for 11ms shock and 3.0 G vibration for 15 minutes. **Extreme S&V** refers to 40G for 6ms & 30G for 11ms shock, and 3.0 G vibration for 60 minutes.
† ATP NVMe N600Si performance might slightly decrease with environment temperature of above 50°C
** Nvidia A2 GPU Adapter (BQZT) is supported up to 40C. For 50C support follow the special bid route

Particulate contamination

Airborne particulates (including metal flakes or particles) and reactive gases acting alone or in combination with other environmental factors such as humidity or temperature might damage the system that might cause the system to malfunction or stop working altogether.

The following specifications indicate the limits of particulates that the system can tolerate:

- Reactive gases:
  - The copper reactivity level shall be less than 200 Angstroms per month (Å/month)
  - The silver reactivity level shall be less than 200 Å/month
- Airborne particulates:
  - The deliquescent relative humidity of the particulate contamination should be more than 60% RH
  - Environment must be free of zinc whiskers

For additional information, see the Specifications section of the documentation for the server, available from the Lenovo Documents site, https://pubs.lenovo.com/

Dust filter

The SE350 supports the use of a dust filter which is installed inside the security bezel. The dust filter has a Minimum Efficiency Rating Value (MERV) of 4, per ASHRAE Standard 52.2-2017.

Ordering information for dust filters is described in the Locking bezel section.

Replacement port dust covers

By default, the server includes dust covers for all front I/O ports, to reduce the impact of dust in your environment. If needed, you can order replacement covers. Ordering information is listed in the following table.

Table 54. Replacement port dust covers

Part number	Description	Contents
4XF7A95478	ThinkSystem SE350 Port Dust Cover Kit	• 7x RJ-45 fillers • 1x VGA cover • 6x antenna covers • 4x USB Type-A fillers • 4x antenna port fillers • 4x SFP fillers • 1x mini USB filler • 1x power connector filler

Coin battery

Ordering information for coin battery field upgrades are listed in the following table.

Tip: The server ships with the necessary coin batteries.

Table 55. Field upgrade options

Part number	Description
4X57A87776*	ThinkEdge CR2032 3V High Temperature (-40C to 125C) Coin Battery

* This option allows customers to stock additional batteries as spare parts should they be needed

Warranty upgrades and post-warranty support

The ThinkSystem SE350 has a 1-year or 3-year warranty based on the machine type of the system:

- 7Z46 - 1 year warranty
- 7D1X - 3 year warranty
- 7D27 - 3 year warranty (India)

The ThinkSystem E1 and E2 Enclosures have the following warranty:

- 7D1R - 3 year warranty

Our global network of regional support centers offers consistent, local-language support enabling you to vary response times and level of service to match the criticality of your support needs:

- **Standard Next Business Day** – Best choice for non-essential systems requiring simple maintenance.
- **Premier Next Business Day** – Best choice for essential systems requiring technical expertise from senior-level Lenovo engineers.
- **Premier 24x7 4-Hour Response** – Best choice for systems where maximum uptime is critical.
- **Premier Enhanced Storage Support 24x7 4-Hour Response** – Best choice for storage systems where maximum uptime is critical.

For more information, consult the brochure Lenovo Operational Support Services for Data Centers Services.

Services

Lenovo Data Center Services empower you at every stage of your IT lifecycle. From expert advisory and strategic planning to seamless deployment and ongoing support, we ensure your infrastructure is built for success. Our comprehensive services accelerate time to value, minimize downtime, and free your IT staff to focus on driving innovation and business growth.

Note: Some service options may not be available in all markets or regions. For more information, go to https://lenovolocator.com/. For information about Lenovo service upgrade offerings that are available in your region, contact your local Lenovo sales representative or business partner.

In this section:

- Lenovo Advisory Services
- Lenovo Plan & Design Services
- Lenovo Deployment, Migration, and Configuration Services
- Lenovo Support Services
- Lenovo Managed Services
- Lenovo Sustainability Services

Lenovo Advisory Services

Lenovo Advisory Services simplify the planning process, enabling customers to build future-proofed strategies in as little as six weeks. Consultants provide guidance on projects including VM migration, storage, backup and recovery, and cost management to accelerate time to value, improve cost efficiency, and build a flexibly scalable foundation.

- **Assessment Services**

  An Assessment helps solve your IT challenges through an onsite, multi-day session with a Lenovo technology expert. We perform a tools-based assessment which provides a comprehensive and thorough review of a company's environment and technology systems. In addition to the technology based functional requirements, the consultant also discusses and records the non-functional business requirements, challenges, and constraints. Assessments help organizations like yours, no matter how large or small, get a better return on your IT investment and overcome challenges in the ever-changing technology landscape.

- **Design Services**

  Professional Services consultants perform infrastructure design and implementation planning to support your strategy. The high-level architectures provided by the assessment service are turned into low level designs and wiring diagrams, which are reviewed and approved prior to implementation. The implementation plan will demonstrate an outcome-based proposal to provide business capabilities through infrastructure with a risk-mitigated project plan.

Lenovo Plan & Design Services

Unlock faster time to market with our tailored, strategic design workshops to align solution approaches with your business goals and technical requirements. Leverage our deep solution expertise and end-to-end delivery partnership to meet your goals efficiently and effectively.

Lenovo Deployment, Migration, and Configuration Services

Optimize your IT operations by shifting labor-intensive functions to Lenovo's skilled technicians for seamless on-site or remote deployment, configuration, and migration. Enjoy peace of mind, faster time to value, and comprehensive knowledge sharing with your IT staff, backed by our best-practice methodology.

- **Deployment Services for Storage and ThinkAgile**

  A comprehensive range of remote and onsite options tailored specifically for your business needs to ensure your storage and ThinkAgile hardware are fully operational from the start.

- **Hardware Installation Services**

  A full-range, comprehensive setup for your hardware, including unpacking, inspecting, and positioning components to ensure your equipment is operational and error-free for the most seamless and efficient installation experience, so you can quickly benefit from your investments.

- **DM/DG File Migration Services**

  Take the burden of file migration from your IT’s shoulders. Our experts will align your requirements and business objectives to the migration plans while coordinating with your team to plan and safely execute the data migration to your storage platforms.

- **DM/DG/DE Health Check Services**

  Our experts perform proactive checks of your Firmware and system health to ensure your machines are operating at peak and optimal efficiency to maximize up-time, avoid system failures, ensure the security of IT solutions and simplify maintenance.

- **Factory Integrated Services**

  A suite of value-added offerings provided during the manufacturing phase of a server or storage system that reduces time to value. These services aim at improving your hardware deployment experience and enhance the quality of a standard configuration before it arrives at your facility.

Lenovo Support Services

In addition to response time options for hardware parts, repairs, and labor, Lenovo offers a wide array of additional support services to ensure your business is positioned for success and longevity. Our goal is to reduce your capital outlays, mitigate your IT risks, and accelerate your time to productivity.

- **Premier Support for Data Centers**

  Your direct line to the solution that promises the best, most comprehensive level of support to help you fully unlock the potential of your data center.

- **Premier Enhanced Storage Support (PESS)**

  Gain all the benefits of Premier Support for Data Centers, adding dedicated storage specialists and resources to elevate your storage support experience to the next level.

- **Committed Service Repair (CSR)**

  Our commitment to ensuring the fastest, most seamless resolution times for mission-critical systems that require immediate attention to ensure minimal downtime and risk for your business. This service is only available for machines under the Premier 4-Hour Response SLA.

- **Multivendor Support Services (MVS)**

  Your single point of accountability for resolution support across vast range of leading Server, Storage, and Networking OEMs, allowing you to manage all your supported infrastructure devices seamlessly from a single source.

- **Keep Your Drive (KYD)**

  Protect sensitive data and maintain compliance with corporate retention and disposal policies to ensure your data is always under your control, regardless of the number of drives that are installed in your Lenovo server.

- **Technical Account Manager (TAM)**

  Your single point of contact to expedite service requests, provide status updates, and furnish reports to track incidents over time, ensuring smooth operations and optimized performance as your business grows.

- **Enterprise Software Support (ESS)**

  Gain comprehensive, single-source, and global support for a wide range of server operating systems and Microsoft server applications.

For more information, consult the brochure Lenovo Operational Support Services for Data Centers.

Lenovo Managed Services

Achieve peak efficiency, high security, and minimal disruption with Lenovo's always-on Managed Services. Our real-time monitoring, 24x7 incident response, and problem resolution ensure your infrastructure operates seamlessly. With quarterly health checks for ongoing optimization and innovation, Lenovo's remote active monitoring boosts end-user experience and productivity by keeping your data center's hardware performing at its best.

Lenovo Managed Services provides continuous 24x7 remote monitoring (plus 24x7 call center availability) and proactive management of your data center using state-of-the-art tools, systems, and practices by a team of highly skilled and experienced Lenovo services professionals.

Quarterly reviews check error logs, verify firmware & OS device driver levels, and software as needed. We'll also maintain records of latest patches, critical updates, and firmware levels, to ensure you systems are providing business value through optimized performance.

Lenovo Sustainability Services

- **Asset Recovery Services**

  Lenovo Asset Recovery Services (ARS) provides a secure, seamless solution for managing end-of-life IT assets, ensuring data is safely sanitized while contributing to a more circular IT lifecycle. By maximizing the reuse or responsible recycling of devices, ARS helps businesses meet sustainability goals while recovering potential value from their retired equipment. For more information, see the Asset Recovery Services offering page.

- **CO2 Offset Services**

  Lenovo's CO2 Offset Services offer a simple and transparent way for businesses to take tangible action on their IT footprint. By integrating CO2 offsets directly into device purchases, customers can easily support verified climate projects and track their contributions, making meaningful progress toward their sustainability goals without added complexity.

- **Lenovo Certified Refurbished**

  Lenovo Certified Refurbished offers a cost-effective way to support IT circularity without compromising on quality and performance. Each device undergoes rigorous testing and certification, ensuring reliable performance and extending its lifecycle. With Lenovo's trusted certification, you gain peace of mind while making a more sustainable IT choice.

Lenovo TruScale

Lenovo TruScale XaaS is your set of flexible IT services that makes everything easier. Streamline IT procurement, simplify infrastructure and device management, and pay only for what you use – so your business is free to grow and go anywhere.

Lenovo TruScale is the unified solution that gives you simplified access to:

- The industry's broadest portfolio – from pocket to cloud – all delivered as a service
- A single-contract framework for full visibility and accountability
- The global scale to rapidly and securely build teams from anywhere
- Flexible fixed and metered pay-as-you-go models with minimal upfront cost
- The growth-driving combination of hardware, software, infrastructure, and solutions – all from one single provider with one point of accountability.

For information about Lenovo TruScale offerings that are available in your region, contact your local Lenovo sales representative or business partner.

Regulatory compliance

The SE350 conforms to the following standards:

- ANSI/UL62368-1
- IEC 62368-1 (CB Certificate and CB Test Report)
- FCC - Verified to comply with Part 15 of the FCC Rules, Class A
- Canada ICES-003, issue 7, Class A
- CSA C22.2 No. 62368-1
- CISPR 32, Class A, CISPR 35
- Japan VCCI, Class A
- Taiwan BSMI CNS15936, Class A; CNS15598-1; Section 5 of CNS15663
- CE, UKCA Mark (EN55032 Class A, EN62368-1, EN55024, EN55035, EN61000-3-2, EN61000-3-3, (EU) 617/2013, and EN IEC 63000 (RoHS))
- Korea KN32, Class A, KN35
- Russia, Belorussia and Kazakhstan, TP EAC 037/2016 (for RoHS)
- Russia, Belorussia and Kazakhstan, EAC: TP TC 004/2011 (for Safety); TP TC 020/2011 (for EMC)
- EAC Russia, Belorussia and Kazakhstan, TR CU 020/2011 and TR CU 004/2011
- Australia/New Zealand AS/NZS CISPR 32, Class A; AS/NZS 62368.1
- UL Green Guard, UL2819
- China CCC certificate, GB17625.1; GB4943.1; GB/T9254.1
- China CECP certificate, CQC3135
- China CELP certificate, HJ 2507-2011
- Japanese Energy-Saving Act
- Mexico NOM-019
- TUV-GS (EN62368-1, and EK1-ITB2000)
- India BIS 13252 (Part 1)
- Germany GS
- Brazil INMETRO
- South Africa NRCS LOA
- Ukraine UkrCEPRO
- Morocco CMIM Certification (CM)
- NEBS 3
- Verizon Carrier Certification

Top-of-rack Ethernet switches

The server supports the top-of-rack Ethernet switches that are listed in the following table. These switches have front-to-rear (reverse) airflow for use with servers where the networking ports are at the front of the server.

Table 56. Top-of-rack switches

Part number	Description
1 Gb top-of-rack switches	
7Y810012WW	Lenovo ThinkSystem NE0152T RackSwitch (Front to Rear)
715952F	Lenovo RackSwitch G8052 (Front to Rear)
10 Gb top-of-rack switches	
7159A2X	Lenovo ThinkSystem NE1032 RackSwitch (Front to Rear)
7159B2X	Lenovo ThinkSystem NE1032T RackSwitch (Front to Rear)
7159C2X	Lenovo ThinkSystem NE1072T RackSwitch (Front to Rear)
715964F	Lenovo RackSwitch G8264 (Front to Rear)
7159DFX	Lenovo RackSwitch G8264CS (Front to Rear)
7159CFV	Lenovo RackSwitch G8272 (Front to Rear)
7159GR5	Lenovo RackSwitch G8296 (Front to Rear)
7159BF7	Lenovo RackSwitch G8124E (Front to Rear)
25 Gb top-of-rack switches	
7159E2X	Lenovo ThinkSystem NE2572 RackSwitch (Front to Rear)
40 Gb top-of-rack switches	
7159BFX	Lenovo RackSwitch G8332 (Front to Rear)
100 Gb top-of-rack switches	
7159D2X	Lenovo ThinkSystem NE10032 RackSwitch (Front to Rear)

For more information, see the list of Product Guides in the Top-of-rack switches categories:

- 1 Gb Ethernet switches: http://lenovopress.com/networking/tor/1gb?rt=product-guide
- 10 Gb Ethernet switches: http://lenovopress.com/networking/tor/10gb?rt=product-guide
- 25 Gb Ethernet switches: https://lenovopress.com/networking/tor/25gb?rt=product-guide
- 40 Gb Ethernet switches: http://lenovopress.com/networking/tor/40gb?rt=product-guide
- 100 Gb Ethernet switches: https://lenovopress.com/networking/tor/100Gb?rt=product-guide

Uninterruptible power supply units

The following table lists the uninterruptible power supply (UPS) units that are offered by Lenovo.

Table 57. Uninterruptible power supply units

Part number	Description
Rack-mounted or tower UPS units - 100-125VAC	
7DD5A001WW	RT1.5kVA 2U Rack or Tower UPS-G2 (100-125VAC)
55941AX	RT1.5kVA 2U Rack or Tower UPS (100-125VAC)
55942AX	RT2.2kVA 2U Rack or Tower UPS (100-125VAC)
7DD5A003WW	RT3kVA 2U Rack or Tower UPS-G2 (100-125VAC)
55943AX	RT3kVA 2U Rack or Tower UPS (100-125VAC)
Rack-mounted or tower UPS units - 200-240VAC	
7DD5A002WW	RT1.5kVA 2U Rack or Tower UPS-G2 (200-240VAC)
55941KX	RT1.5kVA 2U Rack or Tower UPS (200-240VAC)
55942KX	RT2.2kVA 2U Rack or Tower UPS (200-240VAC)
7DD5A005WW	RT3kVA 2U Rack or Tower UPS-G2 (200-240VAC)
55943KX	RT3kVA 2U Rack or Tower UPS (200-240VAC)
7DD5A007WW	RT5kVA 3U Rack or Tower UPS-G2 (200-240VAC)
55945KX	RT5kVA 3U Rack or Tower UPS (200-240VAC)
7DD5A008WW	RT6kVA 3U Rack or Tower UPS-G2 (200-240VAC)
55946KX	RT6kVA 3U Rack or Tower UPS (200-240VAC)
55948KX	RT8kVA 6U Rack or Tower UPS (200-240VAC)
7DD5A00AWW	RT11kVA 6U Rack or Tower UPS-G2 (200-240VAC)
55949KX	RT11kVA 6U Rack or Tower UPS (200-240VAC)
55943KT†	ThinkSystem RT3kVA 2U Standard UPS (200-230VAC) (2x C13 10A, 2x GB 10A, 1x C19 16A outlets)
55943LT†	ThinkSystem RT3kVA 2U Long Backup UPS (200-230VAC) (2x C13 10A, 2x GB 10A, 1x C19 16A outlets)
55946KT†	ThinkSystem RT6kVA 5U UPS (200-230VAC) (2x C13 10A outlets, 1x Terminal Block output)
5594XKT†	ThinkSystem RT10kVA 5U UPS (200-230VAC) (2x C13 10A outlets, 1x Terminal Block output)
Rack-mounted or tower UPS units - 380-415VAC	
55948PX	RT8kVA 6U 3:1 Phase Rack or Tower UPS (380-415VAC)
55949PX	RT11kVA 6U 3:1 Phase Rack or Tower UPS (380-415VAC)

† Only available in China and the Asia Pacific market.

For more information, see the list of Product Guides in the UPS category:
https://lenovopress.com/servers/options/ups

Power distribution units

The following table lists the power distribution units (PDUs) that are offered by Lenovo.

Table 58. Power distribution units

Part number	Feature code	Description	ANZ	ASEAN	Brazil	EET	MEA	RUCIS	WE	HTK	INDIA	JAPAN	LA	NA	PRC
0U Basic PDUs															
4PU7A93176	C0QH	0U 36 C13 and 6 C19 Basic 32A 1 Phase PDU v2	Y	Y	Y	Y	Y	Y	Y	Y	Y	N	Y	Y	Y
4PU7A93169	C0DA	0U 36 C13 and 6 C19 Basic 32A 1 Phase PDU	Y	Y	Y	Y	Y	Y	Y	Y	Y	N	Y	Y	Y
4PU7A93177	C0QJ	0U 24 C13/C15 and 24 C13/C15/C19 Basic 32A 3 Phase WYE PDU v2	Y	Y	Y	Y	Y	Y	Y	Y	Y	Y	Y	Y	Y
4PU7A93170	CBVF	0U 24 C13/C15 and 24 C13/C15/C19 Basic 32A 3 Phase WYE PDU	Y	Y	Y	Y	Y	Y	Y	Y	Y	Y	Y	Y	Y
00YJ776	ATZY	0U 36 C13/6 C19 24A 1 Phase PDU	N	Y	Y	N	N	N	N	N	N	Y	Y	Y	N
00YJ779	ATZX	0U 21 C13/12 C19 48A 3 Phase PDU	N	N	Y	N	N	N	Y	N	N	Y	Y	Y	N
00YJ777	ATZZ	0U 36 C13/6 C19 32A 1 Phase PDU	Y	Y	Y	Y	Y	Y	Y	Y	Y	N	N	Y	Y
00YJ778	AU00	0U 21 C13/12 C19 32A 3 Phase PDU	Y	Y	N	Y	Y	Y	Y	Y	Y	N	N	Y	Y
0U Switched and Monitored PDUs															
4PU7A93181	C0QN	0U 21 C13/C15 and 21 C13/C15/C19 Switched and Monitored 48A 3 Phase Delta PDU v2 (60A derated)	N	Y	N	N	N	N	N	Y	N	Y	N	Y	N
4PU7A93174	CBVJ	0U 21 C13/C15 and 21 C13/C15/C19 Switched and Monitored 48A 3 Phase Delta PDU (60A derated)	Y	Y	Y	Y	Y	Y	Y	Y	Y	Y	Y	Y	Y
4PU7A93178	C0QK	0U 20 C13 and 4 C19 Switched and Monitored 32A 1 Phase PDU v2	Y	Y	Y	Y	Y	Y	Y	Y	Y	N	Y	Y	Y
4PU7A93171	C0D8	0U 20 C13 and 4 C19 Switched and Monitored 32A 1 Phase PDU	Y	Y	Y	Y	Y	Y	Y	Y	Y	N	Y	Y	Y
4PU7A93182	C0QP	0U 18 C13/C15 and 18 C13/C15/C19 Switched and Monitored 63A 3 Phase WYE PDU v2	Y	Y	Y	Y	Y	Y	Y	Y	Y	Y	Y	Y	Y
4PU7A93175	C0CS	0U 18 C13/C15 and 18 C13/C15/C19 Switched and Monitored 63A 3 Phase WYE PDU	Y	Y	Y	Y	Y	Y	Y	Y	Y	N	Y	Y	Y
4PU7A93180	C0QM	0U 18 C13/C15 and 18 C13/C15/C19 Switched and Monitored 32A 3 Phase WYE PDU v2	Y	Y	Y	Y	Y	Y	Y	Y	Y	Y	Y	Y	Y
4PU7A93173	CBVH	0U 18 C13/C15 and 18 C13/C15/C19 Switched and Monitored 32A 3 Phase WYE PDU	Y	Y	Y	Y	Y	Y	Y	Y	Y	Y	Y	Y	Y
4PU7A93179	C0QL	0U 16 C13/C15 and 16 C13/C15/C19 Switched and Monitored 24A 1 Phase PDU v2 (30A derated)	N	Y	N	N	N	N	N	Y	N	Y	N	Y	N
4PU7A93172	CBVG	0U 16 C13/C15 and 16 C13/C15/C19 Switched and Monitored 24A 1 Phase PDU(30A derated)	Y	Y	Y	Y	Y	Y	Y	Y	Y	Y	Y	Y	Y
00YJ783	AU04	0U 12 C13/12 C19 Switched and Monitored 48A 3 Phase PDU	N	N	Y	N	N	N	Y	N	N	Y	Y	Y	N
00YJ781	AU03	0U 20 C13/4 C19 Switched and Monitored 24A 1 Phase PDU	N	N	Y	N	Y	N	Y	N	N	Y	Y	Y	N

Part number	Feature code	Description	ANZ	ASEAN	Brazil	EET	MEA	RUCIS	WE	HTK	INDIA	JAPAN	LA	NA	PRC
00YJ782	AU02	0U 18 C13/6 C19 Switched and Monitored 32A 3 Phase PDU	Y	Y	Y	Y	Y	Y	Y	Y	Y	N	Y	N	Y
00YJ780	AU01	0U 20 C13/4 C19 Switched and Monitored 32A 1 Phase PDU	Y	Y	Y	Y	Y	Y	Y	Y	Y	N	Y	N	Y
1U Switched and Monitored PDUs															
4PU7A90808	C0D4	1U 18 C19/C13 Switched and monitored 48A 3P WYE PDU V2 ETL	N	N	N	N	N	N	N	Y	N	Y	Y	Y	N
4PU7A81117	BNDV	1U 18 C19/C13 switched and monitored 48A 3P WYE PDU - ETL	N	N	N	N	N	N	N	N	N	N	N	Y	N
4PU7A90809	C0DE	1U 18 C19/C13 Switched and monitored 48A 3P WYE PDU V2 CE	Y	Y	Y	Y	Y	Y	Y	Y	Y	Y	Y	N	Y
4PU7A81118	BNDW	1U 18 C19/C13 switched and monitored 48A 3P WYE PDU – CE	Y	Y	Y	Y	Y	Y	Y	Y	Y	Y	Y	N	Y
4PU7A90810	C0DD	1U 18 C19/C13 Switched and monitored 80A 3P Delta PDU V2	N	N	N	N	N	N	N	Y	N	Y	Y	Y	N
4PU7A77467	BLC4	1U 18 C19/C13 Switched and Monitored 80A 3P Delta PDU	N	N	N	N	N	N	N	N	N	Y	N	Y	N
4PU7A90811	C0DC	1U 12 C19/C13 Switched and monitored 32A 3P WYE PDU V2	Y	Y	Y	Y	Y	Y	Y	Y	Y	Y	Y	Y	Y
4PU7A77468	BLC5	1U 12 C19/C13 switched and monitored 32A 3P WYE PDU	Y	Y	Y	Y	Y	Y	Y	Y	Y	Y	Y	Y	Y
4PU7A90812	C0DB	1U 12 C19/C13 Switched and monitored 60A 3P Delta PDU V2	N	N	N	N	N	N	N	Y	N	Y	Y	Y	N
4PU7A77469	BLC6	1U 12 C19/C13 switched and monitored 60A 3P Delta PDU	N	N	N	N	N	N	N	N	N	N	N	Y	N
46M4002	5896	1U 9 C19/3 C13 Switched and Monitored DPI PDU	Y	Y	Y	Y	Y	Y	Y	Y	Y	Y	Y	Y	Y
46M4004	5894	1U 12 C13 Switched and Monitored DPI PDU	Y	Y	Y	Y	Y	Y	Y	Y	Y	Y	Y	Y	Y
46M4003	5897	1U 9 C19/3 C13 Switched and Monitored 60A 3 Phase PDU	Y	Y	Y	Y	Y	Y	Y	Y	Y	Y	Y	Y	Y
46M4005	5895	1U 12 C13 Switched and Monitored 60A 3 Phase PDU	Y	Y	Y	Y	Y	Y	Y	Y	Y	Y	Y	Y	Y
1U C13 Enterprise PDUs (12x IEC 320 C13 outlets)															
39M2816	6030	DPI C13 PDU+	Y	Y	Y	Y	Y	Y	Y	Y	Y	Y	Y	Y	Y
39Y8941	6010	Enterprise C13 PDU	Y	Y	Y	Y	Y	Y	Y	Y	Y	Y	Y	Y	Y
1U C19 Enterprise PDUs (6x IEC 320 C19 outlets)															
39Y8948	6060	Enterprise C19 PDU	Y	Y	Y	Y	Y	Y	Y	Y	Y	Y	Y	Y	Y
39Y8923	6061	Enterprise C19 3 phase PDU (60a)	N	N	Y	N	N	N	Y	N	N	N	Y	Y	N
1U Front-end PDUs (3x IEC 320 C19 outlets)															
39Y8938	6002	DPI 30amp/125V Front-end PDU with NEMA L5-30P	Y	Y	Y	Y	Y	Y	Y	Y	Y	Y	Y	Y	Y
39Y8939	6003	DPI 30amp/250V Front-end PDU with NEMA L6-30P	Y	Y	Y	Y	Y	Y	Y	Y	Y	Y	Y	Y	Y
39Y8934	6005	DPI 32amp/250V Front-end PDU with IEC 309 2P+Gnd	Y	Y	Y	Y	Y	Y	Y	Y	Y	Y	Y	Y	Y

Part number	Feature code	Description	ANZ	ASEAN	Brazil	EET	MEA	RUCIS	WE	HTK	INDIA	JAPAN	LA	NA	PRC
39Y8940	6004	DPI 60amp/250V Front-end PDU with IEC 309 2P+Gnd connector	Y	N	Y	Y	Y	Y	Y	N	N	Y	Y	Y	N
39Y8935	6006	DPI 63amp/250V Front-end PDU with IEC 309 2P+Gnd connector	Y	Y	Y	Y	Y	Y	Y	Y	Y	Y	Y	Y	Y
1U NEMA PDUs (6x NEMA 5-15R outlets)															
39Y8905	5900	DPI 100-127v PDU with Fixed Nema L5-15P line cord	Y	Y	Y	Y	Y	Y	Y	Y	Y	Y	Y	Y	Y
Line cords for 1U PDUs that ship without a line cord															
40K9611	6504	4.3m, 32A/380-415V, EPDU/IEC 309 3P+N+G 3ph wye (non-US) Line Cord	Y	Y	Y	Y	Y	Y	Y	Y	Y	Y	Y	Y	Y
40K9612	6502	4.3m, 32A/230V, EPDU to IEC 309 P+N+G (non-US) Line Cord	Y	Y	Y	Y	Y	Y	Y	Y	Y	Y	Y	Y	Y
40K9613	6503	4.3m, 63A/230V, EPDU to IEC 309 P+N+G (non-US) Line Cord	Y	Y	Y	Y	Y	Y	Y	Y	Y	Y	Y	Y	Y
40K9614	6500	4.3m, 30A/208V, EPDU to NEMA L6-30P (US) Line Cord	Y	Y	Y	Y	Y	Y	Y	Y	Y	Y	Y	Y	Y
40K9615	6501	4.3m, 60A/208V, EPDU to IEC 309 2P+G (US) Line Cord	N	N	Y	N	N	N	Y	N	N	Y	Y	Y	N
40K9617	6505	4.3m, 32A/230V, Souriau UTG to AS/NZS 3112 (Aus/NZ) Line Cord	Y	Y	Y	Y	Y	Y	Y	Y	Y	Y	Y	Y	Y
40K9618	6506	4.3m, 32A/250V, Souriau UTG Female to KSC 8305 (S. Korea) Line Cord	Y	Y	Y	Y	Y	Y	Y	Y	Y	Y	Y	Y	Y

For more information, see the Lenovo Press documents in the PDU category:
https://lenovopress.com/servers/options/pdu

Rack cabinets

The SE350 supports installation in a rack when mounted in either the 1U E1 Enclosure or the 2U E2 Enclosure. See Mounting options for details.

Note: The E2 Enclosure is not supported in the 12U and 18U Micro Data Center rack cabinets.

The following table lists the supported rack cabinets.

Table 59. Rack cabinets

Model	Description
93072RX	25U Standard Rack (1000mm)
93072PX	25U Static S2 Standard Rack (1000mm)
93084PX	42U Enterprise Rack

For specifications about these racks, see the Lenovo Rack Cabinet Reference, available from: https://lenovopress.com/lp1287-lenovo-rack-cabinet-reference

For more information, see the list of Product Guides in the Rack cabinets category: https://lenovopress.com/servers/options/racks

Notes:

- The following racks do not support the use of the cable management arm (CMA):
  - 25U racks, type 9307
  - 42U racks, type 9307

KVM console options

The following table lists the supported KVM consoles.

Table 60. KVM console

Part number	Description
Consoles	
4XF7A84188	ThinkSystem 18.5" LCD console (with US English keyboard)
4XF7A73009	ThinkSystem 18.5" LCD console (with US English keyboard)
17238BX	1U 18.5" Standard Console (without keyboard - see the next table)

The following table lists the keyboards supported with the 1U 18.5" Standard Console (now withdrawn).

Note: These keyboards are not supported with the ThinkSystem 18.5" LCD Console.

Table 61. Keyboards for 1U 18.5" Standard Console

Part number	Description
7ZB7A05469	ThinkSystem Keyboard w/ Int.Pointing Device USB - Arabic 253 RoHS v2
7ZB7A05468	ThinkSystem Keyboard w/ Int. Pointing Device USB - Belg/UK 120 RoHS v2
7ZB7A05206	ThinkSystem Keyboard w/ Int. Pointing Device USB - Czech 489 RoHS v2
7ZB7A05207	ThinkSystem Keyboard w/ Int. Pointing Device USB - Danish 159 RoHS v2
7ZB7A05208	ThinkSystem Keyboard w/ Int. Pointing Device USB - Dutch 143 RoHS v2
7ZB7A05210	ThinkSystem Keyboard w/ Int. Pointing Device USB - Fr/Canada 445 RoHS v2
7ZB7A05209	ThinkSystem Keyboard w/ Int. Pointing Device USB - French 189 RoHS v2
7ZB7A05211	ThinkSystem Keyboard w/ Int. Pointing Device USB - German 129 RoHS v2
7ZB7A05212	ThinkSystem Keyboard w/ Int. Pointing Device USB - Greek 219 RoHS v2
7ZB7A05213	ThinkSystem Keyboard w/ Int. Pointing Device USB - Hebrew 212 RoHS v2
7ZB7A05214	ThinkSystem Keyboard w/ Int. Pointing Device USB - Hungarian 208 RoHS v2
7ZB7A05215	ThinkSystem Keyboard w/ Int. Pointing Device USB - Italian 141 RoHS v2
7ZB7A05216	ThinkSystem Keyboard w/ Int. Pointing Device USB - Japanese 194 RoHS v2
7ZB7A05217	ThinkSystem Keyboard w/ Int. Pointing Device USB - Korean 413 RoHS v2
7ZB7A05218	ThinkSystem Keyboard w/ Int. Pointing Device USB - LA Span 171 RoHS v2
7ZB7A05219	ThinkSystem Keyboard w/ Int. Pointing Device USB - Norwegian 155 RoHS v2
7ZB7A05220	ThinkSystem Keyboard w/ Int. Pointing Device USB - Polish 214 RoHS v2
7ZB7A05221	ThinkSystem Keyboard w/ Int. Pointing Device USB - Portugese 163 RoHS v2
7ZB7A05222	ThinkSystem Keyboard w/ Int. Pointing Device USB - Russian 441 RoHS v2
7ZB7A05223	ThinkSystem Keyboard w/ Int. Pointing Device USB - Slovak 245 RoHS v2
7ZB7A05231	ThinkSystem Keyboard w/ Int. Pointing Device USB - Slovenian 234 RoHS v2
7ZB7A05224	ThinkSystem Keyboard w/ Int. Pointing Device USB - Spanish 172 RoHS v2
7ZB7A05225	ThinkSystem Keyboard w/ Int. Pointing Device USB - Swed/Finn 153 RoHS v2
7ZB7A05226	ThinkSystem Keyboard w/ Int. Pointing Device USB - Swiss F/G 150 RoHS v2
7ZB7A05227	ThinkSystem Keyboard w/ Int. Pointing Device USB - Thai 191 RoHS v2
7ZB7A05467	ThinkSystem Keyboard with Int. Pointing Device USB - Trad Chinese/US 467 RoHS v2
7ZB7A05228	ThinkSystem Keyboard w/ Int. Pointing Device USB - Turkish 179 RoHS v2
7ZB7A05229	ThinkSystem Keyboard w/ Int. Pointing Device USB - UK Eng 166 RoHS v2
7ZB7A05470	ThinkSystem Keyboard w/ Int. Pointing Device USB - US Eng 103P RoHS v2
7ZB7A05230	ThinkSystem Keyboard w/ Int. Pointing Device USB - US Euro 103P RoHS v2

The following table lists the available KVM switches and the options that are supported with them.

Table 62. KVM switches and options

Part number	Description
KVM Console switches	
1754D1T	ThinkSystem Digital 2x1x16 KVM Switch (DVI video output port)
1754A1T	ThinkSystem Analog 1x8 KVM Switch (DVI video output port)
1754D2X	Global 4x2x32 Console Manager (GCM32)
1754D1X	Global 2x2x16 Console Manager (GCM16)
1754A2X	Local 2x16 Console Manager (LCM16)
1754A1X	Local 1x8 Console Manager (LCM8)
Cables for ThinkSystem Digital and Analog KVM Console switches	
4X97A11108	ThinkSystem VGA to DVI Conversion Cable
4X97A11109	ThinkSystem Single-USB Conversion Cable for Digital KVM
4X97A11107	ThinkSystem Dual-USB Conversion Cable for Digital KVM
4X97A11106	ThinkSystem USB Conversion Cable for Analog KVM
Cables for GCM and LCM Console switches	
43V6147	Single Cable USB Conversion Option (UCO)
39M2895	USB Conversion Option Pack
46M5383	Virtual Media Conversion Option Gen2 (VCO2)
46M5382	Serial Conversion Option (SCO)

For more information, see the list of Product Guides in the KVM Switches and Consoles category:
http://lenovopress.com/servers/options/kvm

Lenovo Financial Services

Why wait to obtain the technology you need now? No payments for 90 days and predictable, low monthly payments make it easy to budget for your Lenovo solution.

- **Flexible**

  Our in-depth knowledge of the products, services and various market segments allows us to offer greater flexibility in structures, documentation and end of lease options.

- **100% Solution Financing**

  Financing your entire solution including hardware, software, and services, ensures more predictability in your project planning with fixed, manageable payments and low monthly payments.

- **Device as a Service (DaaS)**

  Leverage latest technology to advance your business. Customized solutions aligned to your needs. Flexibility to add equipment to support growth. Protect your technology with Lenovo's Premier Support service.

- **24/7 Asset management**

  Manage your financed solutions with electronic access to your lease documents, payment histories, invoices and asset information.

- **Fair Market Value (FMV) and $1 Purchase Option Leases**

  Maximize your purchasing power with our lowest cost option. An FMV lease offers lower monthly payments than loans or lease-to-own financing. Think of an FMV lease as a rental. You have the flexibility at the end of the lease term to return the equipment, continue leasing it, or purchase it for the fair market value. In a $1 Out Purchase Option lease, you own the equipment. It is a good option when you are confident you will use the equipment for an extended period beyond the finance term. Both lease types have merits depending on your needs. We can help you determine which option will best meet your technological and budgetary goals.

Ask your Lenovo Financial Services representative about this promotion and how to submit a credit application. For the majority of credit applicants, we have enough information to deliver an instant decision and send a notification within minutes.

Seller training courses

The following sales training courses are offered for employees and partners (login required). Courses are listed in date order.

1. **Lenovo Data Centerテクニカルセールス認定試験学習ガイド**
   2025-07-02 | 10 minutes | Employees and Partners

   Japanese translated study guide for LENU-322C
   このガイドには、Lenovo データセンター技術演習 (LENU-322P) および認定試験 (LENU-322C) の準備に役立つ情報が含まれています。
   タグ: データセンター製品

   Tags: DataCenter Products

   Published: 2025-07-02
   Length: 10 minutes

   Start the training:
   Employee link: Grow@Lenovo
   Partner link: Lenovo 360 Learning Center

   Course code: LENU-322C-SG-AJP

2. **Lenovoデータセンターセールス認定試験学習ガイド**
   2025-07-02 | 10 minutes | Employees and Partners

   Japanese translated study guide for LENU-122C
   このガイドには、Lenovo データセンターセールス実務（LENU-122P）および認定試験（LENU-122C）の準備に役立つ情報が含まれています。
   タグ：データセンター製品

   Tags: DataCenter Products

   Published: 2025-07-02
   Length: 10 minutes

   Start the training:
   Employee link: Grow@Lenovo
   Partner link: Lenovo 360 Learning Center

   Course code: LENU-122C-SG-AJP
3. **Lenovo Data Center Technical Sales Certification Exam Study Guide**
   2025-07-01 | 10 minutes | Employees and Partners

   This guide includes information to help candidates prepare and register for the Data Center Technical Sales practice and certification exams.

   Tags: DataCenter Products

   Published: 2025-07-01
   Length: 10 minutes

   Start the training:
   Employee link: Grow@Lenovo
   Partner link: Lenovo 360 Learning Center

   Course code: LENU-322C-SG
4. **Lenovo Data Center Product Portfolio**
   2025-06-11 | 20 minutes | Employees and Partners

   This course introduces the Lenovo data center portfolio, and covers servers, storage, storage networking, and software-defined infrastructure products. After completing this course about Lenovo data center products, you will be able to identify product types within each data center family, describe Lenovo innovations that this product family or category uses, and recognize when a specific product should be selected.

   Course objectives:
   1.Identify product types within each data center family
   2.Describe the features of the product family or category
   3.Recognize when a specific product should be selected

   Tags: Advanced DataCenter, DataCenter Products, Server, ThinkAgile, ThinkEdge, ThinkSystem

   Published: 2025-06-11
   Length: 20 minutes

   Start the training:
   Employee link: Grow@Lenovo
   Partner link: Lenovo 360 Learning Center

   Course code: SXXW1110r8

5. **VTT Edge: News from the Edge - Portfolio Update May 2025**
   2025-06-10 | 60 minutes | Employees Only

   What's happening at the Edge? The ThinkEdge SE100 has made its debut, but what else is happening in the Lenovo Edge family? Join Mike Chu and Chris Lafferty as they discuss the latest news on our Edge servers and the view moving forward. Topics will include:
   • SE350 and SE360
   • The competition
   • ThinkEdge Roadmap

   Tags: ThinkEdge

   Published: 2025-06-10
   Length: 60 minutes

   Start the training:
   Employee link: Grow@Lenovo

   Course code: DVEDG220
6. **Family Introduction: Edge Servers**
   2025-05-16 | 18 minutes | Employees and Partners

   This course introduces the concept of edge servers. Edge servers are used at the edge of an IoT environment, where they perform pre-processing of data, and data forwarding to core environments.

   Course Objectives:
   •Describe the Internet of Things (IoT)
   •Define an edge server
   •Discuss edge server features

   Tags: Server, ThinkEdge

   Published: 2025-05-16
   Length: 18 minutes

   Start the training:
   Employee link: Grow@Lenovo
   Partner link: Lenovo 360 Learning Center

   Course code: SXXW1105
7. **Partner Technical Webinar - ThinkEdge Update**
   2025-03-31 | 60 minutes | Employees and Partners

   In this 60-minute replay, Chris Laffey and Don Fisher from Lenovo ThinkEdge presented an update on the ThinkEdge portfolio. Chris went through the portfolio highlighting the new SE100 and the transition from SE350 to SE350 v2 and SE360 v2. Don closed describing the use case with IMSA sports car racing.

   Tags: Server

   Published: 2025-03-31
   Length: 60 minutes

   Start the training:
   Employee link: Grow@Lenovo
   Partner link: Lenovo 360 Learning Center

   Course code: 032825

8. **Lenovo Edge Sales Certification Assessment**
   2025-03-31 | 45 minutes | Employees and Partners

   This test will assess your understanding of the content in this learning path. Completing the courses and the assessment are required to earn the Lenovo Edge Sales Certification.

   Tags: Server

   Published: 2025-03-31
   Length: 45 minutes

   Start the training:
   Employee link: Grow@Lenovo
   Partner link: Lenovo 360 Learning Center

   Course code: LENA-EDG-125A
9. **VTT AI & Edge: Workload Consolidation and Converging Technologies**
   2025-02-13 | 72 minutes | Partners Only

   Please join Trent Richardson, Edge Solution Specialist and Alexander "Doc" Docherty, Senior Sales Engineer as they speak to us.

   Topics in this session will include:

   • Digital transformation across verticals
   • Consolidating and future proofing for AI

   Tags: Artificial Intelligence (AI), Business solutions, Technical Sales, ThinkEdge

   Published: 2025-02-13
   Length: 72 minutes

   Start the training:
   Partner link: Lenovo 360 Learning Center

   Course code: DVAI213
10. **VTT AI & Edge: Workload Consolidation and Converging Technologies**
    2025-02-13 | 80 minutes | Employees Only

    Please join Trent Richardson, Edge Solution Specialist and Alexander "Doc" Docherty, Senior Sales Engineer as they speak to us.

    Topics in this session will include:

    • Digital transformation across verticals
    • Consolidating and future proofing for AI
    • Lenovo Resources

    Tags: Artificial Intelligence (AI), Business solutions, Technical Sales, ThinkEdge

    Published: 2025-02-13
    Length: 80 minutes

    Start the training:
    Employee link: Grow@Lenovo

    Course code: DVAI212

11. **Lenovo Data Center Sales Certification Exam Study Guide**
2025-02-12 | 10 minutes | Employees and Partners

This guide includes information to help candidates prepare and register for the Data Center Sales practice and certification exams.

Tags: DataCenter Products

Published: 2025-02-12
Length: 10 minutes

Start the training:
Employee link: Grow@Lenovo
Partner link: Lenovo 360 Learning Center

Course code: LENU-122C-SG

12. **Partner Technical Webinar - SE350 Migration Strategy**
2024-11-04 | 60 minutes | Employees and Partners

In this 60-minute webinar Chris Laffy, our Senior Product Line Manager, shares his extensive insights and ideas on migration strategies from the original SE350 to its successors.

Tags: DataCenter Products, ThinkEdge

Published: 2024-11-04
Length: 60 minutes

Start the training:
Employee link: Grow@Lenovo
Partner link: Lenovo 360 Learning Center

Course code: 102524

13. **VTT: Edge - The SE350 EOL is Coming, Prepare Yourself and Your Customer September 2024**
2024-09-10 | 60 minutes | Employees Only

As of March 2025, the Lenovo ThinkEdge SE350 will be EOL. Join Geoff Hunt and Chris Laffey as they discuss how to help your ThinkEdge SE350 customers transition to other offerings, with a special focus on ThinkEdge SE350 V2 and SE360 V2. Topics will include:
•Positioning the SE350 V2 and SE360 V2 as alternates for the EOL SE350
•A technical view of the generational differences

Tags: Technical Sales, ThinkEdge

Published: 2024-09-10
Length: 60 minutes

Start the training:
Employee link: Grow@Lenovo

Course code: DVEDG215

14. **Think AI Weekly: Lenovo Validated Design for Public Safety and Security Edge AI**
2024-09-05 | 60 minutes | Employees Only

In this session a panel from the Lenovo ISG/IDG ThinkEdge Team discuss vertical solutions enabled by edge computing. Alejandro Perez, Trent Richardson, and Chris Arenas focus on the Lenovo Validated Design for Public Safety and Security while reviewing the process and importance of Lenovo Validated Designs for the Edge

Tags: Artificial Intelligence (AI), ThinkEdge

Published: 2024-09-05
Length: 60 minutes

Start the training:
Employee link: Grow@Lenovo

Course code: DTAIW117

15. **VTT Edge: Lenovo Validated Design for Public Safety and Security Edge & AI July 2024**
2024-08-05 | 60 minutes | Employees Only

The Lenovo ThinkEdge Team is collaborating with eco-system partners to design and validate Edge AI solutions across verticals. Join this session to learn about these efforts and the architecture of the first Lenovo Validated Design for Public Sector Safety and Security. The session will cover the following topics:
•Overview of the Lenovo Validated Designs (LVD) for Vertical Edge
•Public Sector Safety and Security LVD
•Business Key drivers and solution benefits
•Architecture and Technology Overview
•Relevant use cases
•Components and sizing details
•Validation results and pricing model

Tags: Artificial Intelligence (AI), Technical Sales, ThinkEdge

Published: 2024-08-05
Length: 60 minutes

Start the training:
Employee link: Grow@Lenovo

Course code: DVEDG214

16. **Partner Technical Webinar - ThinkEdge Portfolio**
2024-08-02 | 60 minutes | Employees and Partners

July 26, 2024 - Lenovo SA's (Alex Docherty, Marcus White, and Eugene Grandberry) discuss strategy around the Thinkedge Portfolio.

Tags: ThinkEdge

Published: 2024-08-02
Length: 60 minutes

Start the training:
Employee link: Grow@Lenovo
Partner link: Lenovo 360 Learning Center

Course code: 072624

17. **VTT Edge: Lenovo Customer Solution for ENOC Filling Stations and Retail June 2024**
2024-06-10 | 45 minutes | Employees Only

Join Massimo (Max) Angelucci, Lenovo Solution Architect, and Abdlkareem (AK) Alhawajreh, Lenovo Client Account Manager, as they discuss the journey of the sale, the customer business, and their challenges. They cover the considerations and decision points when architecting the solution and why the customer chose Lenovo Edge.

Tags: Oil and Gas, Retail, ThinkEdge

Published: 2024-06-10
Length: 45 minutes

Start the training:
Employee link: Grow@Lenovo

Course code: DVEDG213

18. **Business Problems Addressed with Lenovo Data & Analytics Solutions**
2024-01-31 | 20 minutes | Employees and Partners

Data is the quantities, characters, or symbols on which operations are performed by a computer, which is then stored and transmitted in the form of electrical signals and recorded on magnetic, optical, solid state, or mechanical recording media. All different types of organizations rely more and more on their data to gain valuable insights and improve their business. As expected, they will have challenges with gaining this insight. In this course we will discuss those challenges and problems our customers face and describe how Lenovo Data and Analytics Solutions can help customers solve each problem.

After completing this training, you will be able to define the following common problems for databases and big data and describe how Lenovo can help customers solve each problem: scalability, management, performance, protection, security, knowledge/skill, and technology evolution.

After completing this training, you will be able to define the following common problems for databases and big data and describe how Lenovo can help customers solve each problem: scalability, management, performance, protection, security, knowledge/skill, and technology evolution.

Tags: Data & Analytics, SAP, ThinkAgile, ThinkSystem

Published: 2024-01-31
Length: 20 minutes

Start the training:
Employee link: Grow@Lenovo
Partner link: Lenovo 360 Learning Center

Course code: DSOLP200

19. **Basics of the Edge Ecosystem for Sellers**
2023-12-15 | 20 minutes | Employees and Partners

The purpose of this learning module is to familiarize Lenovo field sales, inside sales and partners with the Edge ecosystem and how Lenovo fits into the Edge space.

•Explain the basics of an Edge Ecosystem
•Articulate the inherent challenges of Edge Computing
•Present how Lenovo fits in the Edge Ecosystem

Tags: Artificial Intelligence (AI), Cross-Industry, Sales, ThinkEdge

Published: 2023-12-15
Length: 20 minutes

Start the training:
Employee link: Grow@Lenovo
Partner link: Lenovo 360 Learning Center

Course code: DTEF101

20. **The 10-minute Edge conversation for Lenovo Sellers**
2023-12-14 | 20 minutes | Employees and Partners

The purpose of this course is to enable sellers to have a 10 to 15-minute customer conversation addressing the relevancy of Edge solutions to the customer business.

Learning Objectives:

•Prepare for the initial customer conversation
•Hold a 10-minute Edge Operational Technology (OT) conversation
•Take the appropriate steps to progress the sale

Tags: ThinkEdge

Published: 2023-12-14
Length: 20 minutes

Start the training:
Employee link: Grow@Lenovo
Partner link: Lenovo 360 Learning Center

Course code: DTEF103

21. **Azure Infrastructure**
2023-11-03 | 66 minutes | Employees and Partners

This course covers the hardware and software infrastructure of Azure environments, including edge computing, on-premises services, storage, security, and directory services. The course consists of five videos with a runtime of around 66 minutes. By the end of this course you will be able to recall the hardware and software infrastructure of Azure environments and explain how customers can leverage edge computing, on-premises services, storage, security, and directory services. Last updated in November 2023.

Tags: ThinkEdge, ThinkSystem

Published: 2023-11-03
Length: 66 minutes

Start the training:
Employee link: Grow@Lenovo
Partner link: Lenovo 360 Learning Center

Course code: SXTW1110

22. **MX Solution Deep Dive: MS Azure and SE350**
2023-11-02 | 80 minutes | Employees and Partners

Course Description: Harshad Kolte (Product Marketing Manager) and David Ye (Principal Technical Consultant), present how MS Azure and the Lenovo SE350 can bring Cloud technology to the edge of your network and help you realize faster time-to-value in the process.

Course objectives:
•List the Microsoft Azure Stack portfolio and its use cases
•Explain the ThinkAgile MX1021 solution

Tags: Cloud, Microsoft, Technical Sales

Published: 2023-11-02
Length: 80 minutes

Start the training:
Employee link: Grow@Lenovo
Partner link: Lenovo 360 Learning Center

Course code: DMX200

23. **Intro to Edge: 3Ws of Edge Computing for Lenovo Sellers**
2023-09-14 | 13 minutes | Employees and Partners

This course provides fundamental concepts and a learning foundation for those who are new to the data center and to computing at the Edge. It defines where is the Edge, identifies what are the business drivers for edge computing, and discusses why is edge computing important to Lenovo. September 2023

Tags: DataCenter Products, ThinkEdge

Published: 2023-09-14
Length: 13 minutes

Start the training:
Employee link: Grow@Lenovo
Partner link: Lenovo 360 Learning Center

Course code: DTEF100

24. **Lenovo Solutions for the Edge - Who Are the Customers?**
2023-09-14 | 25 minutes | Employees and Partners

This course is focused on enabling sellers to identify opportunities for Lenovo Edge and Edge AI Solutions. Topics include a general overview of the Lenovo Edge portfolio and recognizing how edge computing can benefit customers.

Course Objectives:
•Identify Lenovo Edge Opportunities
•Recognize how an Edge solution would benefit your customer
•Provide a general overview of Lenovo solutions at the Edge
•Identify key points for your customer Edge conversation

Tags: Artificial Intelligence (AI), Sales, ThinkEdge

Published: 2023-09-14
Length: 25 minutes

Start the training:
Employee link: Grow@Lenovo
Partner link: Lenovo 360 Learning Center

Course code: DTEF102

25. **Family Portfolio: Edge**
2023-09-12 | 15 minutes | Employees and Partners

This course introduces edge environments, and the roles played by Lenovo edge servers and edge clients in those environments. It looks briefly at use cases for these edge devices.
When you have completed this course, you should be able to list the edge solutions in the Lenovo portfolio, describe the features of each solution, and determine which solution is best suited to a specific environment.

Tags: Artificial Intelligence (AI), Industry solutions, Server, ThinkCentre, ThinkEdge

Published: 2023-09-12
Length: 15 minutes

Start the training:
Employee link: Grow@Lenovo
Partner link: Lenovo 360 Learning Center

Course code: SXXW2513r2

Related publications and links

For more information, see these resources:

- Lenovo ThinkSystem SE350 product page:
https://www.lenovo.com/us/en/p/data-center/servers/edge/thinksystem-se350/77xx6dsse35
- Interactive 3D Tour of the ThinkSystem SE350:
https://lenovopress.com/lp1212
- Lenovo Press video walk-through of the ThinkSystem SE350:
https://lenovopress.com/lp1213
- ThinkSystem SE350 drivers and support
https://datacentersupport.lenovo.com/products/servers/thinksystem/se350/7d1x/downloads
- Lenovo Hardware Installation & Removal Videos on the SE350:
  - YouTube: https://www.youtube.com/playlist?list=PLYV5R7hVcs-DkEpH4SzvKZck4f6rVRzUE
  - Youku: http://list.youku.com/albumlist/show/id_52211641.html
- Lenovo ThinkSystem SE350 product publications:
http://thinksystem.lenovofiles.com/help/index.jsp
  - Quick Start
  - Activation Guide
  - Setup Guide
  - Configuration Installation Guide (Bookshelf, DIN Rail and Wall-Mount installation)
  - Toolless Slide Rail Kit Guide
  - Toolless Slide Rail CMA Guide
  - Short Rail Kit Guide
  - 2-Post Screw-in Rail Kit Guide
  - Maintenance Manual
  - Messages and Codes Reference
- ServerProven hardware compatibility:
http://www.lenovo.com/us/en/serverproven

Related product families

Product families related to this document are the following:

- Edge Computing and Internet of Things (IoT)
- Edge Servers
- ThinkSystem SE350 Edge Server

Notices

Lenovo may not offer the products, services, or features discussed in this document in all countries. Consult your local Lenovo representative for information on the products and services currently available in your area. Any reference to a Lenovo product, program, or service is not intended to state or imply that only that Lenovo product, program, or service may be used. Any functionally equivalent product, program, or service that does not infringe any Lenovo intellectual property right may be used instead. However, it is the user's responsibility to evaluate and verify the operation of any other product, program, or service. Lenovo may have patents or pending patent applications covering subject matter described in this document. The furnishing of this document does not give you any license to these patents. You can send license inquiries, in writing, to:

Lenovo (United States), Inc.
8001 Development Drive
Morrisville, NC 27560
U.S.A.
Attention: Lenovo Director of Licensing

LENOVO PROVIDES THIS PUBLICATION ”AS IS” WITHOUT WARRANTY OF ANY KIND, EITHER EXPRESS OR IMPLIED, INCLUDING, BUT NOT LIMITED TO, THE IMPLIED WARRANTIES OF NON-INFRINGEMENT, MERCHANTABILITY OR FITNESS FOR A PARTICULAR PURPOSE. Some jurisdictions do not allow disclaimer of express or implied warranties in certain transactions, therefore, this statement may not apply to you.

This information could include technical inaccuracies or typographical errors. Changes are periodically made to the information herein; these changes will be incorporated in new editions of the publication. Lenovo may make improvements and/or changes in the product(s) and/or the program(s) described in this publication at any time without notice.

The products described in this document are not intended for use in implantation or other life support applications where malfunction may result in injury or death to persons. The information contained in this document does not affect or change Lenovo product specifications or warranties. Nothing in this document shall operate as an express or implied license or indemnity under the intellectual property rights of Lenovo or third parties. All information contained in this document was obtained in specific environments and is presented as an illustration. The result obtained in other operating environments may vary. Lenovo may use or distribute any of the information you supply in any way it believes appropriate without incurring any obligation to you.

Any references in this publication to non-Lenovo Web sites are provided for convenience only and do not in any manner serve as an endorsement of those Web sites. The materials at those Web sites are not part of the materials for this Lenovo product, and use of those Web sites is at your own risk. Any performance data contained herein was determined in a controlled environment. Therefore, the result obtained in other operating environments may vary significantly. Some measurements may have been made on development-level systems and there is no guarantee that these measurements will be the same on generally available systems. Furthermore, some measurements may have been estimated through extrapolation. Actual results may vary. Users of this document should verify the applicable data for their specific environment.

© Copyright Lenovo 2025. All rights reserved.

This document, LP1168, was created or updated on April 7, 2025.

Send us your comments in one of the following ways:

- Use the online Contact us review form found at:
  https://lenovopress.lenovo.com/LP1168
- Send your comments in an e-mail to:
  comments@lenovopress.com

This document is available online at https://lenovopress.lenovo.com/LP1168.

Trademarks

Lenovo and the Lenovo logo are trademarks or registered trademarks of Lenovo in the United States, other countries, or both. A current list of Lenovo trademarks is available on the Web at https://www.lenovo.com/us/en/legal/copytrade/.

The following terms are trademarks of Lenovo in the United States, other countries, or both:
Lenovo®
ServerProven®
System x®
ThinkAgile®
ThinkEdge®
ThinkShield®
ThinkSystem®
XClarity®

The following terms are trademarks of other companies:

AMD is a trademark of Advanced Micro Devices, Inc.

Intel® and Xeon® are trademarks of Intel Corporation or its subsidiaries.

Linux® is the trademark of Linus Torvalds in the U.S. and other countries.

Microsoft®, ActiveX®, Azure®, Georgia®, Hyper-V®, PowerShell, Windows PowerShell®, Windows Server®, and Windows® are trademarks of Microsoft Corporation in the United States, other countries, or both.

IBM® is a trademark of IBM in the United States, other countries, or both.

Other company, product, or service names may be trademarks or service marks of others.