Lenovo ThinkSystem ST550 Server (Xeon SP Gen 1 / Gen 2)

Product Guide

The Lenovo ThinkSystem ST550 2-socket 4U rack-mountable tower server provides outstanding performance and industry-leading reliability. It is ideal for small-to-medium businesses, distributed enterprises, retail, educational institutions, and remote/branch offices.

The ST550 server now supports second-generation Intel Xeon Processor Scalable Family processors with up to 768 GB of TruDDR4 system memory.

Suggested uses: business workloads such as e-mail, workgroup applications, file & print, system management, web serving, and point-of-sale applications



Figure 1. Lenovo ThinkSystem ST550

Did you know?

The ThinkSystem ST550 is an enterprise-grade server with support for hot-swap power supplies, fans, and drives. It also offers full support of Lenovo XClarity Administrator for comprehensive systems management and includes the next generation UEFI-based Lenovo XClarity Provisioning Manager for system setup and diagnosis, and the Lenovo XClarity Controller management processor for ongoing systems management and alerting. These tools make the ST550 easy to deploy, integrate, service, and manage.

Key features

The ThinkSystem ST550 is a high-performance dual-socket tower server based on the second-generation Intel Xeon Scalable processors, supporting a wide range of processors to suit a wide range of budgets and application requirements.

Scalability and performance

The ST550 offers the following features to boost performance, improve scalability, and reduce costs:

- Improves productivity by offering superior system performance with up to two processors, each with up to 22 cores, and core speeds up to 3.8 GHz.
- Hyper-Threading Technology to maximize the concurrent execution of multithreaded applications, available with most processors.
- Intelligent and adaptive system performance with energy-efficient Intel Turbo Boost Technology, available with most processors, allows CPU cores to run at maximum speeds during peak workloads by temporarily going beyond processor thermal design power (TDP).
- Intel Virtualization Technology integrates hardware-level virtualization hooks that allow operating system vendors to better use the hardware for virtualization workloads.
- Intel Speed Select Technology provides improvements in server utilization and guaranteed per-core performance service levels with more granular control over processor performance.
- Intel Deep Learning Boost (Vector Neural Network Instruction set or VNNI) is designed to deliver significant, more efficient Deep Learning (Inference) acceleration for high-performance Artificial Intelligence (AI) workloads.
- Intel Advanced Vector Extensions 512 (AVX-512) enable acceleration of enterprise-class workloads, including databases and enterprise resource planning (ERP).
- Each processor has six memory channels with memory speeds of up to 2933 MHz to help maximize system performance
- Up to 768 GB of memory capacity using 12x 64GB DIMMs
- The 12 Gbps SAS internal storage connectivity doubles the data transfer rate compared to 6 Gb SAS solutions to maximize performance of storage I/O-intensive applications.
- Flexible storage configurations support either 2.5-inch or 3.5-inch hot-swap drive bays or a combination of the two (hybrid configuration). Configurations with 3-5-inch simple-swap drive bays are also available.
    - Up to 16x 2.5-inch drive bays with two 5.25-inch media drive bays available
    - Up to 20x 2.5-inch drive bays with the media bays converted to 4x 2.5-inch drive bays
    - Up to 8x 3.5-inch drive bays with two 5.25-inch media drive bays available
    - Up to 8x 3.5-inch + 4x 2.5-inch drive bays with the media bay conversion
    - Up to 8x 3.5-inch simple-swap drive bays
- 3.5-inch drive bays support SAS and SATA HDDs and SSDs. 2.5-inch drive bays support SAS and SATA HDDs and SSDs, as well as NVMe drives.
- Support for up to four NVMe PCIe SSDs in a 2.5-inch form factor maximizes drive I/O performance, in terms of throughput, bandwidth, and latency.
- The use of solid-state drives (SSDs) instead of, or along with, traditional hard disk drives (HDDs) can significantly improve I/O performance. An SSD can support up to 100 times more I/O operations per second (IOPS) than a typical HDD.
- New high-speed RAID controllers from Broadcom provide 12 Gb SAS connectivity to the drive backplanes. A variety of RAID adapters are available, with cache up to 4 GB and support for 20 drives on a single controller.
- Supports a new Lenovo patented-design M.2 adapter for convenient operating system boot functions. Available M.2 adapters support either one M.2 drive or two M.2 drives in a RAID 1 configuration for greater boot drive performance and reliability.

- The server has two integrated Gigabit Ethernet ports.
- The server offers PCI Express 3.0 I/O expansion capabilities that improve the theoretical maximum bandwidth by almost 100% (8 GT/ps per link using 128b/130b encoding) compared to the previous generation of PCI Express 2.0 (5 GT/s per link using 8b/10b encoding).
- The server offers up to six PCIe 3.0 I/O expansion slots plus one slot reserved for the M.2 adapter
- Support for up to two NVIDIA graphics processing units (GPUs) to maximize computing power.

Availability and serviceability

The ST550 provides the following features to simplify serviceability and increase system uptime:

- Designed to run 24 hours a day, 7 days a week
- The server offers Single Device Data Correction (SDDC, also known as Chipkill), Adaptive Double-Device Data Correction (ADDDC, also known as Redundant Bit Steering or RBS), memory mirroring, and memory rank sparing for redundancy in the event of a non-correctable memory failure.
- The server offers hot-swap (HS) SSDs and HDDs, and supports RAID redundancy for data protection and greater system uptime.
- Much like HS drives, simple-swap drives are mounted on an easy-to-remove tray and work with the same RAID options. Simple-swap require a system power-down before adding or replacing, however simple-swap drives are less expensive than hot-swap drives.
- The Dual M.2 Boot Adapter supports RAID-1 which enables two installed M.2 drives to be configured as a redundant pair.
- The server supports hot-swap power supplies; with two installed, they form a redundant pair to provide availability for business-critical applications. The server also offers an optional 4th fan which offers redundancy in most server configurations.
- Toolless cover removal provides easy access to upgrades and serviceable parts, such as CPU, memory, and adapter cards.
- Proactive Platform Alerts (including PFA and SMART alerts) for: processors, voltage regulators, memory, internal storage (SAS/SATA HDDs and SSDs), fans, power supplies, RAID controllers, and server ambient and sub-component temperatures. Alerts can be surfaced through the XClarity Controller management processor to managers such as Lenovo XClarity Administrator, VMware vCenter, and Microsoft System Center. These proactive alerts let you take appropriate actions in advance of possible failure, thereby increasing server uptime and application availability.
- SSDs, with no moving parts, offer significantly better reliability than mechanical HDDs, for greater uptime.
- The built-in XClarity Controller continuously monitors system parameters, triggers alerts, and performs recovery actions in case of failures to minimize downtime.
- Built-in diagnostics in UEFI, using Lenovo XClarity Provisioning Manager, speed up troubleshooting tasks to reduce service time.
- Lenovo XClarity Provisioning Manager supports diagnostics and can save service data to a USB key drive or remote CIFS share folder for troubleshooting and reduce service time.
- Auto restart in the event of a momentary loss of AC power (based on power policy setting in the XClarity Controller service processor)
- Support for the XClarity Administrator Mobile app running on a supported smartphone and connected to the server through the service-enabled USB port, enables additional local systems management functions.
- Three-year or one-year customer-replaceable unit and onsite limited warranty, 9 x 5 next business day. Optional service upgrades are available.

Manageability and security

The following powerful systems management features simplify local and remote management of the ST550:

- The server includes an XClarity Controller (XCC) to monitor server availability. Optional upgrade to XCC Advanced to provide remote control (keyboard video mouse) functions. Optional upgrade to XCC Enterprise enables the additional support for the mounting of remote media files (ISO and IMG image files), boot capture, and power capping.
- Lenovo XClarity Administrator offers comprehensive hardware management tools that help to increase uptime, reduce costs and improve productivity through advanced server management capabilities.
- New UEFI-based Lenovo XClarity Provisioning Manager, accessible from F1 during boot, provides system inventory information, graphical UEFI Setup, platform update function, RAID Setup wizard, operating system installation function, and diagnostic functions.
- Support for Lenovo XClarity Energy Manager which captures real-time power and temperature data from the server and provides automated controls to lower energy costs.
- Integrated Trusted Platform Module (TPM) 2.0 support enables advanced cryptographic functionality, such as digital signatures and remote attestation.
- Supports Secure Boot to ensure that only a digitally signed operating system can be used. Supported with HDDs and SSDs as well as M.2 drives in the M.2 Adapter.
- Industry-standard Advanced Encryption Standard (AES) NI support for faster, stronger encryption.
- Intel Execute Disable Bit functionality can prevent certain classes of malicious buffer overflow attacks when combined with a supported operating system.
- Intel Trusted Execution Technology provides enhanced security through hardware-based resistance to malicious software attacks, allowing an application to run in its own isolated space, protected from all other software running on a system.
- Physical security measures to prevent unauthorized access: Lockable side cover to prevent access to internal components, a slot at the rear of the server for a Kensington Cable. Optional additional physical security features are a lockable front security door and a chassis intrusion switch (included in some models).

Energy efficiency

The ST550 offers the following energy-efficiency features to save energy, reduce operational costs, increase energy availability, and contribute to the green environment:

- Energy-efficient planar components help lower operational costs.
- High-efficiency power supplies with 80 PLUS Platinum and Titanium certifications. Energy Star 3.0 certified.
- Intel Intelligent Power Capability powers individual processor elements on and off as needed to reduce power draw.
- Low-voltage 1.2 V DDR4 memory DIMMs use up to 20% less energy compared to 1.35 V DDR3 DIMMs.
- SSDs use as much as 80% less power than traditional spinning 2.5-inch HDDs.
- The server uses hexagonal ventilation holes, which can be grouped more densely than round holes, providing more efficient airflow through the system.
- Optional Lenovo XClarity Energy Manager provides advanced data center power notification, analysis, and policy-based management to help achieve lower heat output and reduced cooling needs.

Components and connectors

The following figure shows the front of the server.

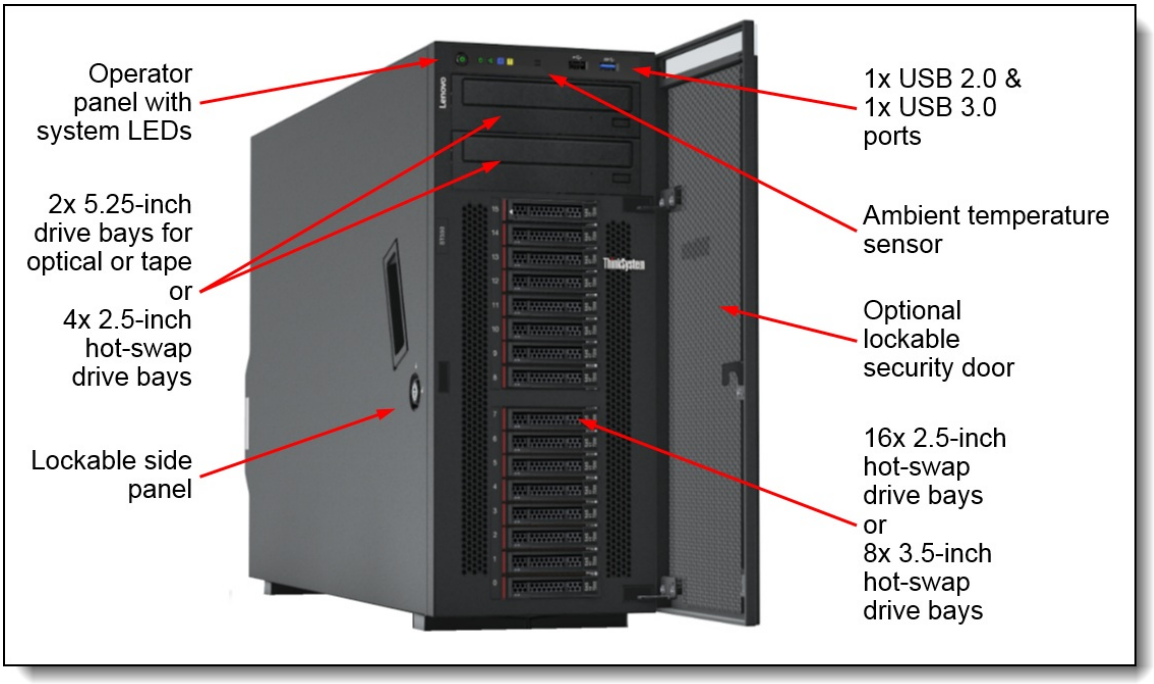

Figure 2. Front view of the ThinkSystem ST550 server

The following figure shows the rear of the server.

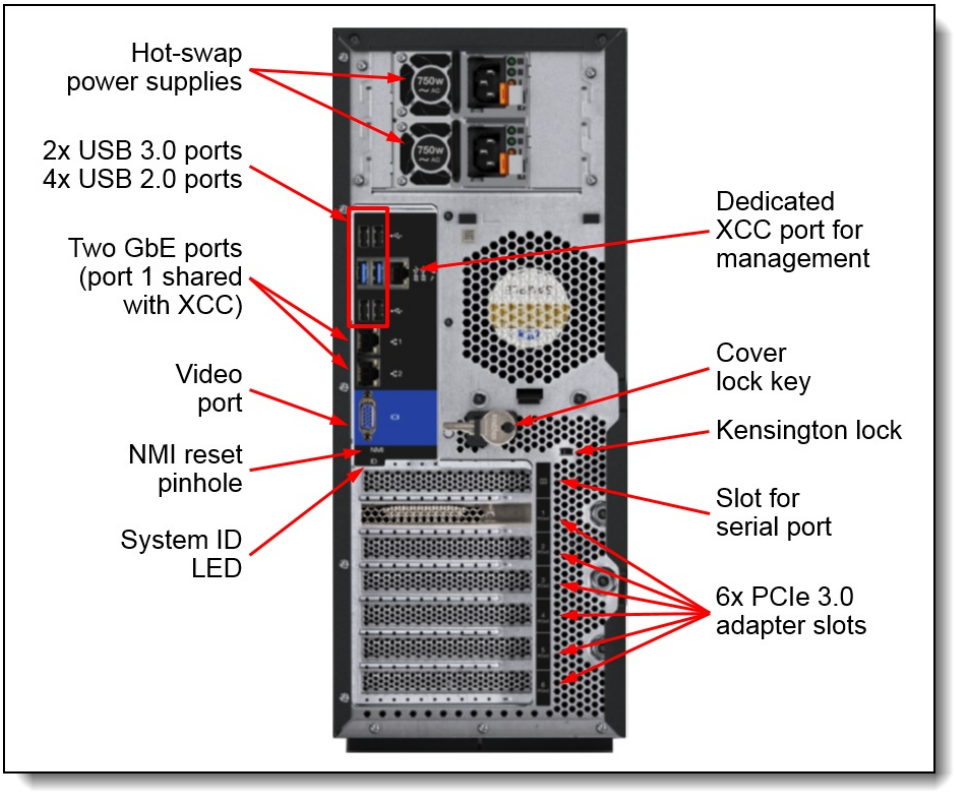

Figure 3. Rear view of the ThinkSystem ST550 server

The following figure shows the locations of key components inside the server.

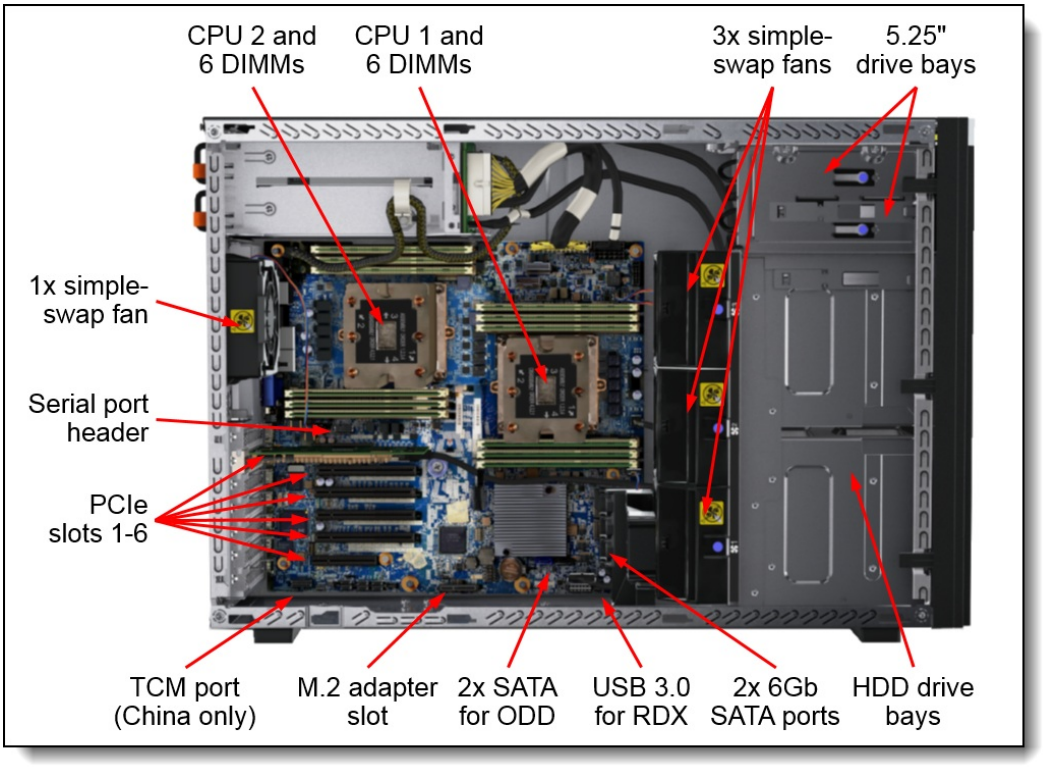

Figure 4. Internal view of the ThinkSystem ST550 server

System architecture

The following figure shows the architectural block diagram of the ST550, showing the major components and their connections.

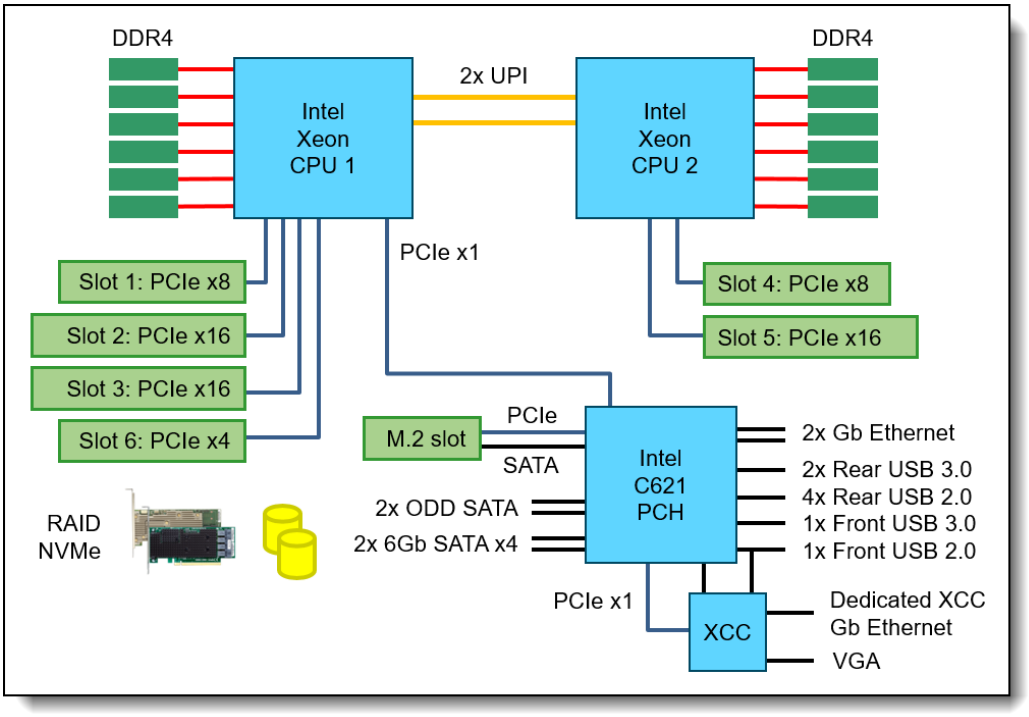

Figure 5. ST550 system architectural block diagram

Standard specifications

The following table lists the standard specifications.

Table 1. Standard specifications

Components	Specification
Machine type	7X09 - 1 year warranty 7X10 - 3 year warranty
Form factor	Tower or 4U Rack.
Processor	One or two second-gen Intel Xeon Processor Scalable Family of processors, either Bronze, Silver, Gold or Platinum-level processors (formerly codename "Cascade Lake"). 1st Gen Intel Xeon processors are also supported. Supports processors up to 22 cores, core speeds up to 3.8 GHz, and TDP ratings up to 125W. Two Intel Ultra Path Interconnect (UPI) links at 10.4 GT/s each.
Chipset	Intel C621 "Lewisburg" chipset
Memory	Up to 12 DIMM sockets (6 DIMMs per processor) supporting Lenovo TruDDR4 DIMMs at up to 2933 MHz. RDIMMs and LRDIMMs (Load Reduced DIMMs) are supported, but memory types cannot be intermixed.
Memory maximums	Up to 768 GB with 12x 64 GB RDIMMs and two processors
Memory protection	ECC, SDDC (for x4-based memory DIMMs), ADDDC (for x4-based memory DIMMs, requires Intel Xeon Gold or Platinum processors), memory mirroring, and memory sparing.

Components	Specification
Disk drive bays	Available configurations: • 8, 16, or 20x 2.5-inch SAS/SATA hot-swap (optional support for NVMe drives) • 4 or 8x 3.5-inch SAS/SATA hot-swap • Both 8x 3.5-inch + 4x 2.5-inch SAS/SATA hot-swap • 4 or 8x 3.5-inch SATA simple-swap Additional drive bays (except for 20-bay and hybrid configurations): • Two 5.25-inch drive bays for optical drives

Maximum internal storage	• 2.5-inch drives:
	  ◦ 614.4TB using 20x 30.72TB 2.5-inch SAS/SATA SSDs
	  ◦ 30.72TB using 4x 7.68TB 2.5-inch NVMe SSDs
	  ◦ 48TB using 20x 2.4TB 2.5-inch HDDs
	• 3.5-inch drives:
	  ◦ 160TB using 8x 20TB 3.5-inch HDDs
	  ◦ 122.88TB using 8x 15.36TB 3.5-inch SAS/SATA SSDs

Storage controller	• 6 Gb Onboard SATA AHCI • 6 Gb Onboard SATA RAID (Intel RSTe) • 12 Gb SAS/SATA RAID adapters with up to 8GB flash-backed cache • 12 Gb SAS/SATA HBA (non-RAID)
Optical drive bays	Two half-height 5.25-inch bays for optical or tape drives. Supports DVD-ROM or Multiburner. Hot-swap bays can be converted to 4x 2.5-inch hot-swap drive bays. (Not available with simple-swap drive configurations.)
Tape drive bays	Two half-height 5.25-inch bays for optical or tape drives. Support for one RDX drive or LTO tape drive.
Network interfaces	Two integrated Gigabit Ethernet 1000BASE-T ports (RJ-45) based on Intel X722 embedded controller (No 10/100 Mbps support)
PCI Expansion slots	Up to 7 PCIe slots: 6 general purpose PCIe 3.0 slots plus one slot reserved for the M.2 adapter. General purpose slots are as follows: • Slot 1: PCIe 3.0 x8 (25W) FHHL • Slot 2: PCIe 3.0 x16 (75W); FHHL • Slot 3: PCIe 3.0 x16 (75W); FHFL • Slot 4: PCIe 3.0 x16 (x8 wired) (25W); FHFL (requires second processor) • Slot 5: PCIe 3.0 x16 (75W); FHFL (requires second processor) • Slot 6: PCIe 3.0 x8 (x4 wired) (25W); FHFL Slots 3 and 5 support double-wide GPUs
Ports	• Front: Two USB ports (one USB 3.0, one USB 2.0 port • Rear: Six USB ports (four USB 2.0, two USB 3.0), one VGA video, one RJ-45 systems management, two RJ-45 GbE network ports, optional serial port. • Internal: One internal USB 3.0 port for RDX drive
Cooling	Supports ASHRAE A2 environments as well as A3/A4 with some limitations. Up to four simple-swap fans: two fans shipped standard on single processor models and three fans shipped on dual processor models or models where there are drive bays in lieu of the optical drive bays. The fourth rear-mounted fan is N+1 redundant, except for certain configurations.
Power supply	Up to two redundant hot-swap 550 W, 750 W or 1100 W High Efficiency Platinum AC power supplies, or 750 W High Efficiency Titanium AC power supplies. Also available is a 450 W fixed (non-hot-swap) power supply. In China only, all hot-swap power supplies also support 240V DC.

Components	Specification
Hot-swap parts	Hard drives, power supplies, and fans
Systems management	Operator panel with status LEDs. XClarity Controller embedded management, XClarity Administrator centralized infrastructure delivery, XClarity Integrator plugins, and XClarity Energy Manager centralized server power management. Optional XClarity Controller Advanced to enable remote control functions.
Security features	Power-on password, administrator's password, Trusted Platform Module (TPM), supporting TPM 1.2 or TPM 2.0. In China only, optional Trusted Cryptographic Module (TCM). Kensington cable slot. Lockable side cover. Optional lockable front security door and chassis intrusion switch (included with some models).
Video	G200 graphics with 16 MB memory with 2D hardware accelerator, integrated into the XClarity Controller. Maximum resolution is 1920x1200 32bpp at 60Hz.
Operating systems supported	Microsoft Windows Server, Red Hat Enterprise Linux, SUSE Linux Enterprise Server, VMware ESXi. See the Operating system support section for specifics.
Limited warranty	Three-year or one-year (model dependent) customer-replaceable unit and onsite limited warranty with 9x5 next business day (NBD).
Service and support	Optional service upgrades are available through Lenovo Services: 4-hour or 2-hour response time, 6-hour fix time, 1-year or 2-year warranty extension, software support for Lenovo hardware and some third-party applications.
Dimensions	Width: 176 mm (6.9 in.), height: 438 mm (17.2 in.), depth: 660 mm (26 in.). See Physical and electrical specifications for details.
Weight	Fully configured: 36 kg (79.36 lb)

Models

ThinkSystem ST550 models can be configured by using the Lenovo Data Center Solution Configurator (DCSC).

Preconfigured server models may also be available for the ST550, however these are region-specific; that is, each region may define their own server models, and not all server models are available in every region.

The following table lists the base CTO models of the ThinkSystem ST550 server.

Table 2. Base CTO models

Machine Type/Model	Description
7X10CTO1WW	ThinkSystem ST550 – 3-year Warranty
7X09CTO1WW	ThinkSystem ST550 – 1-year Warranty

The following tables list the available models, grouped by region.

- Models for Australia and New Zealand
- Models for the South East Asian (ASEAN) market
- Models for Brazil
- Models for EMEA
- Models for Hong Kong, Taiwan, Korea (HTK)
- Models for India
- Models for the Latin America market (except Brazil)
- Models for USA and Canada

Refer to the Specifications section for information about standard features of the server.

Common to all models:

- All models indicated as having the 750W power supply are using the Platinum power supply.

Models for Australia and New Zealand

Table 3. Models for Australia and New Zealand

Model	Intel Xeon processors†	Memory	RAID	Drive bays Drives	Optical	Slots	Power supplies	Power cords	XCC Level	Physical security‡
Standard models										
7X10A0AHAU	1x Silver 4208 8C 85W 2.1G	1x 16GB 2Rx8 2933	930-8i	4x 3.5" HS / 8* Open bay	Open	8 / 11	1x 750W HS	No	Std	No
7X10A0AJAU	1x Silver 4208 8C 85W 2.1G	1x 16GB 2Rx8 2933	930-8i	8x 2.5" HS / 20** Open bay	Open	8 / 11	1x 750W HS	No	Std	No
7X10A09WAU	1x Silver 4209T 8C 70W 2.2G	1x 16GB 2Rx8 2933	930-8i	4x 3.5" HS / 8* Open bay	Open	8 / 11	1x 750W HS	No	Std	No
7X10A0A6AU	1x Silver 4209T 8C 70W 2.2G	1x 16GB 2Rx8 2933	930-8i	8x 2.5" HS / 20** Open bay	Open	8 / 11	1x 750W HS	No	Std	No
7X10A09XAU	1x Silver 4210 10C 85W 2.2G	1x 16GB 2Rx8 2933	930-8i	8x 2.5" HS / 20** Open bay	Open	8 / 11	1x 750W HS	No	Std	No
7X10A0AGAU	1x Silver 4210 10C 85W 2.2G	1x 16GB 2Rx8 2933	930-8i	4x 3.5" HS / 8* Open bay	Open	8 / 11	1x 750W HS	No	Std	No
7X10A0ABAU	1x Silver 4214 12C 85W 2.2G	1x 16GB 2Rx8 2933	930-8i	8x 2.5" HS / 20** Open bay	Open	8 / 11	1x 750W HS	No	Std	No
7X10A0AEAU	1x Silver 4214 12C 85W 2.2G	1x 16GB 2Rx8 2933	930-8i	4x 3.5" HS / 8* Open bay	Open	8 / 11	1x 750W HS	No	Std	No
7X10A0ADAU	1x Silver 4214Y 12/10/8C 85W 2.2G	1x 16GB 2Rx8 2933	930-8i	4x 3.5" HS / 8* Open bay	Open	8 / 11	1x 750W HS	No	Std	No
7X10A0AFAU	1x Silver 4214Y 12/10/8C 85W 2.2G	1x 16GB 2Rx8 2933	930-8i	8x 2.5" HS / 20** Open bay	Open	8 / 11	1x 750W HS	No	Std	No
7X10A0A1AU	1x Silver 4215 8C 85W 2.5G	1x 16GB 2Rx8 2933	930-8i	4x 3.5" HS / 8* Open bay	Open	8 / 11	1x 750W HS	No	Std	No
7X10A0A4AU	1x Silver 4215 8C 85W 2.5G	1x 32GB 2933	930-8i	8x 2.5" HS / 20** Open bay	Open	8 / 11	1x 750W HS	No	Ent	No
7X10A0ACAU	1x Silver 4215 8C 85W 2.5G	1x 16GB 2Rx8 2933	930-8i	8x 2.5" HS / 20** Open bay	Open	8 / 11	1x 750W HS	No	Std	No
7X10A0AMAU	1x Silver 4215 8C 85W 2.5G	1x 16GB 2Rx8 2933	930-8i	8x 2.5" HS / 20** Open bay	Open	8 / 11	1x 750W HS	No	Ent	No
7X10A0A3AU	1x Silver 4216 16C 100W 2.1G	1x 16GB 2Rx8 2933	930-8i	4x 3.5" HS / 8* Open bay	Open	8 / 11	1x 750W HS	No	Std	No
7X10A0A8AU	1x Silver 4216 16C 100W 2.1G	1x 16GB 2Rx8 2933	930-8i	8x 2.5" HS / 20** Open bay	Open	8 / 11	1x 750W HS	No	Ent	No
7X10A0ANAU	1x Silver 4216 16C 100W 2.1G	1x 16GB 2Rx8 2933	930-8i	8x 2.5" HS / 20** Open bay	Open	8 / 11	1x 750W HS	No	Std	No
7X10A09ZAU	1x Gold 5217 8C 115W 3.0G	1x 32GB 2933	930-8i	8x 2.5" HS / 20** Open bay	Open	8 / 11	1x 750W HS	No	Ent	No
7X10A0A0AU	1x Gold 5218 16C 125W 2.3G	1x 32GB 2933	930-8i	8x 2.5" HS / 20** Open bay	Open	8 / 11	1x 750W HS	No	Ent	No
TopSeller models										
7X10A09YAU	1x Bronze 3204 6C 85W 1.9G	1x 16GB 2Rx8 2933	530-8i	8x 2.5" HS / 20** Open bay	Open	8 / 11	1x 750W HS	No	Ent	No

Model	Intel Xeon processors†	Memory	RAID	Drive bays Drives	Optical	Slots	Power supplies	Power cords	XCC Level	Physical security‡
7X10A0A7AU	1x Bronze 3204 6C 85W 1.9G	1x 32GB 2933	930-8i	8x 2.5" HS / 20** Open bay	Open	8 / 11	1x 750W HS	No	Ent	No
7X10A0A9AU	1x Silver 4208 8C 85W 2.1G	1x 16GB 2Rx8 2933	530-8i	8x 2.5" HS / 20** Open bay	Open	8 / 11	1x 750W HS	No	Ent	No
7X10A0AAAU	1x Silver 4208 8C 85W 2.1G	1x 16GB 2Rx8 2933	930-8i	8x 2.5" HS / 20** Open bay	Open	8 / 11	1x 750W HS	No	Ent	No
7X10A0E6AU	1x Silver 4208 8C 85W 2.1G	1x 16GB 2Rx8 2933	9350-8i	8x 2.5" HS / 20** Open bay	Open	8 / 11	1x 750W HS	Yes	Ent	No
7X10A0E8AU	1x Silver 4208 8C 85W 2.1G	1x 32GB 2933	9350-8i	8x 2.5" HS / 20** Open bay	Open	8 / 11	1x 750W HS	Yes	Ent	No
7X10A0EBAU	1x Silver 4208 8C 85W 2.1G	1x 16GB 2Rx8 2933	5350-8i	8x 2.5" HS / 20** Open bay	Open	8 / 11	1x 750W HS	Yes	Ent	No
7X10A0A2AU	1x Silver 4210 10C 85W 2.2G	1x 16GB 2Rx8 2933	930-8i	8x 2.5" HS / 20** Open bay	Open	8 / 11	1x 750W HS	No	Ent	No
7X10A0A5AU	1x Silver 4210 10C 85W 2.2G	1x 16GB 2Rx8 2933	530-8i	8x 2.5" HS / 20** Open bay	Open	8 / 11	1x 750W HS	No	Ent	No
7X10A0AKAU	1x Silver 4210 10C 85W 2.2G	1x 32GB 2933	930-8i	8x 2.5" HS / 20** Open bay	Open	8 / 11	1x 750W HS	No	Ent	No
7X10A0ALAU	1x Silver 4210 10C 85W 2.2G	1x 32GB 2933	530-8i	8x 2.5" HS / 20** Open bay	Open	8 / 11	1x 750W HS	No	Ent	No
7X10A0E9AU	1x Silver 4210 10C 85W 2.2G	1x 32GB 2933	9350-8i	8x 2.5" HS / 20** Open bay	Open	8 / 11	1x 750W HS	Yes	Ent	No
7X10A0EAAU	1x Gold 5218 16C 125W 2.3G	1x 32GB 2933	9350-8i	8x 2.5" HS / 20** Open bay	Open	8 / 11	1x 750W HS	Yes	Ent	No

† Processor detail: Quantity, model, core count, TDP, core frequency
** 20 drive bays includes 4x 2.5" HS drive bays with media bay conversion
* Additionally supports 4x 2.5" HS drive bays with media bay conversion
‡ Physical security includes both security door & intrusion switch

Models for the South East Asia (ASEAN) market

Table 4. Models for the South East Asia (ASEAN) market

Model	Intel Xeon processors†	Memory	RAID	Drive bays Drives	Optical	Slots	Power supplies	Power cords	XCC Level	Physical security‡
Standard models										
7X10A0E7SG	1x Silver 4208 8C 85W 2.1G	1x 8GB 2933	530-8i	8x 2.5" HS / 20** Open bay	Open	8 / 11	1x 450W Fixed	No	Std	No
7X10A080SG	1x Gold 5215 10C 85W 2.5G	1x 16GB 2Rx8 2933	930-8i	4x 3.5" HS / 8* Open bay	Open	8 / 11	1x 750W HS	No	Std	No
7X10A09MSG	1x Gold 5215 10C 85W 2.5G	1x 16GB 2Rx8 2933	930-8i	8x 2.5" HS / 20** Open bay	Open	8 / 11	1x 750W HS	No	Std	No
7X10A08CSG	1x Gold 5215L 10C 85W 2.5G	1x 16GB 2Rx8 2933	930-8i	8x 2.5" HS / 20** Open bay	Open	8 / 11	1x 750W HS	No	Std	No
7X10A09HSG	1x Gold 5215L 10C 85W 2.5G	1x 16GB 2Rx8 2933	930-8i	4x 3.5" HS / 8* Open bay	Open	8 / 11	1x 750W HS	No	Std	No
7X10A07KSG	1x Gold 5218 16C 125W 2.3G	1x 16GB 2Rx8 2933	930-8i	4x 3.5" HS / 8* Open bay	Open	8 / 11	1x 750W HS	No	Std	No
7X10A08KSG	1x Gold 5218 16C 125W 2.3G	1x 16GB 2Rx8 2933	930-8i	8x 2.5" HS / 20** Open bay	Open	8 / 11	1x 750W HS	No	Std	No
7X10A07NSG	1x Gold 5220 18C 125W 2.2G	1x 16GB 2Rx8 2933	930-8i	4x 3.5" HS / 8* Open bay	Open	8 / 11	1x 750W HS	No	Std	No
7X10A086SG	1x Gold 5220 18C 125W 2.2G	1x 16GB 2Rx8 2933	930-8i	8x 2.5" HS / 20** Open bay	Open	8 / 11	1x 750W HS	No	Std	No
7X10A07QSG	1x Gold 5222 4C 105W 3.8G	1x 16GB 2Rx8 2933	930-8i	8x 2.5" HS / 20** Open bay	Open	8 / 11	1x 750W HS	No	Std	No
7X10A082SG	1x Gold 5222 4C 105W 3.8G	1x 16GB 2Rx8 2933	930-8i	4x 3.5" HS / 8* Open bay	Open	8 / 11	1x 750W HS	No	Std	No
7X10A07JSG	1x Gold 6230 20C 125W 2.1G	1x 16GB 2Rx8 2933	930-8i	8x 2.5" HS / 20** Open bay	Open	8 / 11	1x 750W HS	No	Std	No
7X10A090SG	1x Gold 6230 20C 125W 2.1G	1x 16GB 2Rx8 2933	930-8i	4x 3.5" HS / 8* Open bay	Open	8 / 11	1x 750W HS	No	Std	No
7X10A08HSG	1x Gold 6238T 22C 125W 1.9G	1x 16GB 2Rx8 2933	930-8i	8x 2.5" HS / 20** Open bay	Open	8 / 11	1x 750W HS	No	Std	No
7X10A08LSG	1x Gold 6238T 22C 125W 1.9G	1x 16GB 2Rx8 2933	930-8i	4x 3.5" HS / 8* Open bay	Open	8 / 11	1x 750W HS	No	Std	No
7X10A08DSG	1x Platinum 8253 16C 125W 2.2G	1x 16GB 2Rx8 2933	930-8i	4x 3.5" HS / 8* Open bay	Open	8 / 11	1x 750W HS	No	Std	No
7X10A09RSG	1x Platinum 8253 16C 125W 2.2G	1x 16GB 2Rx8 2933	930-8i	8x 2.5" HS / 20** Open bay	Open	8 / 11	1x 750W HS	No	Std	No
7X10A09LSG	1x Platinum 8256 4C 105W 3.8G	1x 16GB 2Rx8 2933	930-8i	4x 3.5" HS / 8* Open bay	Open	8 / 11	1x 750W HS	No	Std	No
7X10A09TSG	1x Platinum 8256 4C 105W 3.8G	1x 16GB 2Rx8 2933	930-8i	8x 2.5" HS / 20** Open bay	Open	8 / 11	1x 750W HS	No	Std	No

† Processor detail: Quantity, model, core count, TDP, core frequency
** 20 drive bays includes 4x 2.5" HS drive bays with media bay conversion
* Additionally supports 4x 2.5" HS drive bays with media bay conversion
‡ Physical security includes both security door & intrusion switch

Models for Brazil

Table 5. Models for Brazil

Model	Intel Xeon processors†	Memory	RAID	Drive bays Drives	Optical	Slots	Power supplies	Power cords	XCC Level	Physical security‡
TopSeller models										
7X10A0BMBR	1x Bronze 3204 6C 85W 1.9G	1x 16GB 1Rx4 2933	730-8i 1GB	4x 3.5" HS / 8* Open bay	Open	8 / 11	1x 750W HS	Yes	Std	No
7X10A0BLBR	1x Silver 4208 8C 85W 2.1G	1x 16GB 1Rx4 2933	730-8i 1GB	4x 3.5" HS / 8* Open bay	Open	8 / 11	1x 750W HS	Yes	Std	No
7X10A0BNBR	1x Silver 4208 8C 85W 2.1G	1x 16GB 1Rx4 2933	530-8i	4x 3.5" HS / 8* Open bay	Open	8 / 11	1x 750W HS	Yes	Std	No
7X10A0EXBR	1x Silver 4210R 10C 100W 2.4G	2x 32GB 2933	5350-8i	8x 2.5" HS / 20** 2x 1.92TB PM893	Open	8 / 11	2x 750W HS	Yes	Ent	No

† Processor detail: Quantity, model, core count, TDP, core frequency
** 20 drive bays includes 4x 2.5" HS drive bays with media bay conversion
* Additionally supports 4x 2.5" HS drive bays with media bay conversion
‡ Physical security includes both security door & intrusion switch

Models for EMEA

Table 6. Models for EMEA

Model	Intel Xeon processors†	Memory	RAID	Drive bays Drives	Optical	Slots	Power supplies	Power cords	XCC Level	Physical security‡
Standard models										
7X10A0DZEA	1x Silver 4208 8C 85W 2.1G	1x 32GB 2933	940-8i 4GB	8x 2.5" HS / 20** Open bay	Open	8 / 11	1x 750W HS	Yes	Ent	No
7X10A0E0EA	1x Silver 4208 8C 85W 2.1G	1x 32GB 2933	9350-8i	8x 2.5" HS / 20** Open bay	Open	8 / 11	1x 750W HS	Yes	Ent	No
7X10A0E3EA	1x Silver 4208 8C 85W 2.1G	1x 16GB 2Rx8 2933	9350-8i	8x 2.5" HS / 20** Open bay	Open	8 / 11	1x 750W HS	Yes	Ent	No
7X10A0EDEA	1x Silver 4208 8C 85W 2.1G	1x 16GB 2Rx8 2933	9350-8i	8x 2.5" HS / 20** Open bay	Open	8 / 11	1x 750W HS	Yes	Ent	No
7X10A0EHEA	1x Silver 4208 8C 85W 2.1G	1x 16GB 2Rx8 2933	9350-8i	8x 2.5" HS / 20** Open bay	Open	8 / 11	1x 750W Titanium	Yes	Ent	No
7X10A0ESEA	1x Silver 4208 8C 85W 2.1G	1x 64GB 2933	9350-8i	8x 2.5" HS / 20** Open bay	Open	8 / 11	1x 750W Titanium	Yes	Ent	No
7X10A0EZEA	1x Silver 4208 8C 85W 2.1G	1x 32GB 2933	9350-8i	8x 2.5" HS / 20** Open bay	Open	8 / 11	1x 750W Titanium	Yes	Ent	No
7X10A0F1EA	1x Silver 4208 8C 85W 2.1G	1x 32GB 2933	530-8i	8x 2.5" HS / 20** Open bay	Open	8 / 11	1x 750W Titanium	Yes	Ent	No
7X10A0F4EA	1x Silver 4208 8C 85W 2.1G	1x 32GB 2933	930-8i	8x 2.5" HS / 20** Open bay	Open	8 / 11	1x 750W Titanium	Yes	Ent	No
7X10A0DWEA	1x Silver 4210R 10C 100W 2.4G	1x 32GB 2933	940-8i 4GB	8x 2.5" HS / 20** Open bay	Open	8 / 11	1x 750W HS	Yes	Ent	No
7X10A0E1EA	1x Silver 4210R 10C 100W 2.4G	1x 32GB 2933	9350-8i	8x 2.5" HS / 20** Open bay	Open	8 / 11	1x 750W HS	Yes	Ent	No
7X10A0E2EA	1x Silver 4210R 10C 100W 2.4G	1x 16GB 2Rx8 2933	9350-8i	8x 2.5" HS / 20** Open bay	Open	8 / 11	1x 750W HS	Yes	Ent	No
7X10A0ECEA	1x Silver 4210R 10C 100W 2.4G	1x 16GB 2Rx8 2933	9350-8i	8x 2.5" HS / 20** Open bay	Open	8 / 11	1x 750W HS	Yes	Ent	No
7X10A0EFEA	1x Silver 4210R 10C 100W 2.4G	1x 16GB 2Rx8 2933	9350-8i	8x 2.5" HS / 20** Open bay	Open	8 / 11	1x 750W Titanium	Yes	Ent	No
7X10A0EKEA	1x Silver 4210R 10C 100W 2.4G	1x 32GB 2933	9350-8i	8x 2.5" HS / 20** Open bay	Open	8 / 11	1x 750W Titanium	Yes	Ent	No
7X10A0EREA	1x Silver 4210R 10C 100W 2.4G	1x 64GB 2933	9350-8i	8x 2.5" HS / 20** Open bay	Open	8 / 11	1x 750W Titanium	Yes	Ent	No
7X10A0F2EA	1x Silver 4210R 10C 100W 2.4G	1x 32GB 2933	530-8i	8x 2.5" HS / 20** Open bay	Open	8 / 11	1x 750W Titanium	Yes	Ent	No
7X10A0F3EA	1x Silver 4210R 10C 100W 2.4G	1x 32GB 2933	930-8i	8x 2.5" HS / 20** Open bay	Open	8 / 11	1x 750W Titanium	Yes	Ent	No
7X10A0ETEA	1x Silver 4215 8C 85W 2.5G	1x 64GB 2933	9350-8i	8x 2.5" HS / 20** Open bay	Open	8 / 11	1x 750W Titanium	Yes	Ent	No

† Processor detail: Quantity, model, core count, TDP, core frequency
** 20 drive bays includes 4x 2.5" HS drive bays with media bay conversion
* Additionally supports 4x 2.5" HS drive bays with media bay conversion
‡ Physical security includes both security door & intrusion switch

Models for Hong Kong, Taiwan, Korea (HTK)

Table 7. Models for Hong Kong, Taiwan, Korea (HTK)

Model	Intel Xeon processors†	Memory	RAID	Drive bays Drives	Optical	Slots	Power supplies	Power cords	XCC Level	Physical security‡
Standard models										
7X10100WCN	1x Silver 4208 8C 85W 2.1G	2x 16GB 2Rx8 2933	930-8i	4x 3.5" HS / 8 4x 4TB SATA HDD	1x Ext DVDRW	8 / 11	2x 1100W HS	No	Std	No
7X10100YCN	1x Silver 4208 8C 85W 2.1G	2x 16GB 2Rx8 2933	930-8i	4x 3.5" HS / 8 4x 4TB SATA HDD	1x Ext DVDRW	8 / 11	2x 1100W HS	No	Std	No
7X10A07ZCN	1x Gold 5215 10C 85W 2.5G	1x 16GB 2Rx8 2933	930-8i	4x 3.5" HS / 8* Open bay	Open	8 / 11	1x 750W HS	No	Std	No
7X10A097CN	1x Gold 5215 10C 85W 2.5G	1x 16GB 2Rx8 2933	930-8i	8x 2.5" HS / 20** Open bay	Open	8 / 11	1x 750W HS	No	Std	No
7X10A091CN	1x Gold 5215L 10C 85W 2.5G	1x 16GB 2Rx8 2933	930-8i	8x 2.5" HS / 20** Open bay	Open	8 / 11	1x 750W HS	No	Std	No
7X10A09NCN	1x Gold 5215L 10C 85W 2.5G	1x 16GB 2Rx8 2933	930-8i	4x 3.5" HS / 8* Open bay	Open	8 / 11	1x 750W HS	No	Std	No
7X10A08NCN	1x Gold 5218 16C 125W 2.3G	1x 16GB 2Rx8 2933	930-8i	4x 3.5" HS / 8* Open bay	Open	8 / 11	1x 750W HS	No	Std	No
7X10A08XCN	1x Gold 5218 16C 125W 2.3G	1x 16GB 2Rx8 2933	930-8i	8x 2.5" HS / 20** Open bay	Open	8 / 11	1x 750W HS	No	Std	No
7X10A078CN	1x Gold 5220 18C 125W 2.2G	1x 16GB 2Rx8 2933	930-8i	4x 3.5" HS / 8* Open bay	Open	8 / 11	1x 750W HS	No	Std	No
7X10A07XCN	1x Gold 5220 18C 125W 2.2G	1x 16GB 2Rx8 2933	930-8i	8x 2.5" HS / 20** Open bay	Open	8 / 11	1x 750W HS	No	Std	No
7X10A08WCN	1x Gold 5222 4C 105W 3.8G	1x 16GB 2Rx8 2933	930-8i	8x 2.5" HS / 20** Open bay	Open	8 / 11	1x 750W HS	No	Std	No
7X10A094CN	1x Gold 5222 4C 105W 3.8G	1x 16GB 2Rx8 2933	930-8i	4x 3.5" HS / 8* Open bay	Open	8 / 11	1x 750W HS	No	Std	No
7X10A07ECN	1x Gold 6230 20C 125W 2.1G	1x 16GB 2Rx8 2933	930-8i	8x 2.5" HS / 20** Open bay	Open	8 / 11	1x 750W HS	No	Std	No
7X10A07WCN	1x Gold 6230 20C 125W 2.1G	1x 16GB 2Rx8 2933	930-8i	4x 3.5" HS / 8* Open bay	Open	8 / 11	1x 750W HS	No	Std	No
7X10A079CN	1x Gold 6238T 22C 125W 1.9G	1x 16GB 2Rx8 2933	930-8i	4x 3.5" HS / 8* Open bay	Open	8 / 11	1x 750W HS	No	Std	No
7X10A09CCN	1x Gold 6238T 22C 125W 1.9G	1x 16GB 2Rx8 2933	930-8i	8x 2.5" HS / 20** Open bay	Open	8 / 11	1x 750W HS	No	Std	No
7X10A09ACN	1x Platinum 8253 16C 125W 2.2G	1x 16GB 2Rx8 2933	930-8i	8x 2.5" HS / 20** Open bay	Open	8 / 11	1x 750W HS	No	Std	No
7X10A09KCN	1x Platinum 8253 16C 125W 2.2G	1x 16GB 2Rx8 2933	930-8i	4x 3.5" HS / 8* Open bay	Open	8 / 11	1x 750W HS	No	Std	No
7X10A08MCN	1x Platinum 8256 4C 105W 3.8G	1x 16GB 2Rx8 2933	930-8i	8x 2.5" HS / 20** Open bay	Open	8 / 11	1x 750W HS	No	Std	No
7X10A093CN	1x Platinum 8256 4C 105W 3.8G	1x 16GB 2Rx8 2933	930-8i	4x 3.5" HS / 8* Open bay	Open	8 / 11	1x 750W HS	No	Std	No
TopSeller models										
7X10A0CACN	1x Bronze 3204 6C 85W 1.9G	1x 16GB 2Rx8 2933	930-8i	4x 3.5" HS / 8* Open bay	Open	8 / 11	1x 750W HS	No	Std	No
7X10A0CGCN	1x Bronze 3204 6C 85W 1.9G	1x 16GB 2Rx8 2933	930-8i	8x 2.5" HS / 20** Open bay	Open	8 / 11	1x 750W HS	No	Std	No
7X10A0CBCN	1x Silver 4208 8C 85W 2.1G	1x 16GB 2Rx8 2933	930-8i	8x 2.5" HS / 20** Open bay	Open	8 / 11	1x 750W HS	No	Std	No

Model	Intel Xeon processors†	Memory	RAID	Drive bays Drives	Optical	Slots	Power supplies	Power cords	XCC Level	Physical security‡
7X10A0CKCN	1x Silver 4208 8C 85W 2.1G	1x 16GB 2Rx8 2933	930-8i	4x 3.5" HS / 8* Open bay	Open	8 / 11	1x 750W HS	No	Std	No
7X10A0CCCN	1x Silver 4210 10C 85W 2.2G	1x 16GB 2Rx8 2933	930-8i	8x 2.5" HS / 20** Open bay	Open	8 / 11	1x 750W HS	No	Std	No
7X10A0CJCN	1x Silver 4210 10C 85W 2.2G	1x 16GB 2Rx8 2933	930-8i	4x 3.5" HS / 8* Open bay	Open	8 / 11	1x 750W HS	No	Std	No
7X10A0CDCN	1x Silver 4214 12C 85W 2.2G	1x 16GB 2Rx8 2933	930-8i	8x 2.5" HS / 20** Open bay	Open	8 / 11	1x 750W HS	No	Std	No
7X10A0CHCN	1x Silver 4214 12C 85W 2.2G	1x 16GB 2Rx8 2933	930-8i	4x 3.5" HS / 8* Open bay	Open	8 / 11	1x 750W HS	No	Std	No
7X10A0CECN	1x Silver 4216 16C 100W 2.1G	1x 16GB 2Rx8 2933	930-8i	8x 2.5" HS / 20** Open bay	Open	8 / 11	1x 750W HS	No	Std	No
7X10A0CFCN	1x Silver 4216 16C 100W 2.1G	1x 16GB 2Rx8 2933	930-8i	4x 3.5" HS / 8* Open bay	Open	8 / 11	1x 750W HS	No	Std	No

† Processor detail: Quantity, model, core count, TDP, core frequency
** 20 drive bays includes 4x 2.5" HS drive bays with media bay conversion
* Additionally supports 4x 2.5" HS drive bays with media bay conversion
‡ Physical security includes both security door & intrusion switch

Models for India

Table 8. Models for India

Model	Intel Xeon processors†	Memory	RAID	Drive bays Drives	Optical	Slots	Power supplies	Power cords	XCC Level	Physical security‡
Standard models										
7X10A085SG	1x Gold 5215 10C 85W 2.5G	1x 16GB 2Rx8 2933	930-8i	8x 2.5" HS / 20** Open bay	Open	8 / 11	1x 750W HS	No	Std	No
7X10A09BSG	1x Gold 5215 10C 85W 2.5G	1x 16GB 2Rx8 2933	930-8i	4x 3.5" HS / 8* Open bay	Open	8 / 11	1x 750W HS	No	Std	No
7X10A08PSG	1x Gold 5215L 10C 85W 2.5G	1x 16GB 2Rx8 2933	930-8i	8x 2.5" HS / 20** Open bay	Open	8 / 11	1x 750W HS	No	Std	No
7X10A08ZSG	1x Gold 5215L 10C 85W 2.5G	1x 16GB 2Rx8 2933	930-8i	4x 3.5" HS / 8* Open bay	Open	8 / 11	1x 750W HS	No	Std	No
7X10A08VSG	1x Gold 5218 16C 125W 2.3G	1x 16GB 2Rx8 2933	930-8i	4x 3.5" HS / 8* Open bay	Open	8 / 11	1x 750W HS	No	Std	No
7X10A09GSG	1x Gold 5218 16C 125W 2.3G	1x 16GB 2Rx8 2933	930-8i	8x 2.5" HS / 20** Open bay	Open	8 / 11	1x 750W HS	No	Std	No
7X10A08BSG	1x Gold 5220 18C 125W 2.2G	1x 16GB 2Rx8 2933	930-8i	4x 3.5" HS / 8* Open bay	Open	8 / 11	1x 750W HS	No	Std	No
7X10A098SG	1x Gold 5220 18C 125W 2.2G	1x 16GB 2Rx8 2933	930-8i	8x 2.5" HS / 20** Open bay	Open	8 / 11	1x 750W HS	No	Std	No
7X10A081SG	1x Gold 5222 4C 105W 3.8G	1x 16GB 2Rx8 2933	930-8i	8x 2.5" HS / 20** Open bay	Open	8 / 11	1x 750W HS	No	Std	No
7X10A096SG	1x Gold 5222 4C 105W 3.8G	1x 16GB 2Rx8 2933	930-8i	4x 3.5" HS / 8* Open bay	Open	8 / 11	1x 750W HS	No	Std	No
7X10A084SG	1x Gold 6230 20C 125W 2.1G	1x 16GB 2Rx8 2933	930-8i	4x 3.5" HS / 8* Open bay	Open	8 / 11	1x 750W HS	No	Std	No
7X10A08ASG	1x Gold 6230 20C 125W 2.1G	1x 16GB 2Rx8 2933	930-8i	8x 2.5" HS / 20** Open bay	Open	8 / 11	1x 750W HS	No	Std	No
7X10A07CSG	1x Gold 6238T 22C 125W 1.9G	1x 16GB 2Rx8 2933	930-8i	8x 2.5" HS / 20** Open bay	Open	8 / 11	1x 750W HS	No	Std	No
7X10A08FSG	1x Gold 6238T 22C 125W 1.9G	1x 16GB 2Rx8 2933	930-8i	4x 3.5" HS / 8* Open bay	Open	8 / 11	1x 750W HS	No	Std	No
7X10A08RSG	1x Platinum 8253 16C 125W 2.2G	1x 16GB 2Rx8 2933	930-8i	4x 3.5" HS / 8* Open bay	Open	8 / 11	1x 750W HS	No	Std	No
7X10A099SG	1x Platinum 8253 16C 125W 2.2G	1x 16GB 2Rx8 2933	930-8i	8x 2.5" HS / 20** Open bay	Open	8 / 11	1x 750W HS	No	Std	No
7X10A07YSG	1x Platinum 8256 4C 105W 3.8G	1x 16GB 2Rx8 2933	930-8i	4x 3.5" HS / 8* Open bay	Open	8 / 11	1x 750W HS	No	Std	No
7X10A08YSG	1x Platinum 8256 4C 105W 3.8G	1x 16GB 2Rx8 2933	930-8i	8x 2.5" HS / 20** Open bay	Open	8 / 11	1x 750W HS	No	Std	No

† Processor detail: Quantity, model, core count, TDP, core frequency
** 20 drive bays includes 4x 2.5" HS drive bays with media bay conversion
* Additionally supports 4x 2.5" HS drive bays with media bay conversion
‡ Physical security includes both security door & intrusion switch

Models for the Latin America market (except Brazil)

Table 10. Models for the Latin America market (except Brazil)

Model	Intel Xeon processors†	Memory	RAID	Drive bays Drives	Optical	Slots	Power supplies	Power cords	XCC Level	Physical security‡
TopSeller models										
7X10A0BGLA	1x Bronze 3204 6C 85W 1.9G	1x 16GB 1Rx4 2933	730-8i 1GB	4x 3.5" HS / 8* Open bay	Open	8 / 11	1x 750W HS	Yes	Std	No
7X10A0D5LA	1x Bronze 3204 6C 85W 1.9G	1x 16GB 1Rx4 2933	530-8i	4x 3.5" HS / 8* Open bay	Open	8 / 11	1x 750W HS	Yes	Std	No
7X10A0D6LA	1x Bronze 3204 6C 85W 1.9G	1x 16GB 1Rx4 2933	730-8i 1GB	4x 3.5" HS / 8* Open bay	Open	8 / 11	1x 750W HS	Yes	Std	No
7X10A0BJLA	1x Silver 4208 8C 85W 2.1G	1x 16GB 1Rx4 2933	730-8i 1GB	4x 3.5" HS / 8* Open bay	Open	8 / 11	1x 750W HS	Yes	Std	No
7X10A0D7LA	1x Silver 4208 8C 85W 2.1G	1x 16GB 1Rx4 2933	730-8i 1GB	8x 2.5" HS / 20** Open bay	Open	8 / 11	1x 750W HS	Yes	Std	No
7X10A0D8LA	1x Silver 4210 10C 85W 2.2G	1x 16GB 1Rx4 2933	530-8i	4x 3.5" HS / 8* Open bay	Open	8 / 11	1x 750W HS	Yes	Std	No
7X10A0D9LA	1x Silver 4210 10C 85W 2.2G	1x 16GB 1Rx4 2933	730-8i 1GB	8x 2.5" HS / 20** Open bay	Open	8 / 11	1x 750W HS	Yes	Std	No
7X10100SLA	1x Silver 4210R 10C 100W 2.4G	1x 16GB 2Rx8 2933	530-8i	8x 2.5" HS / 20** Open bay	Open	8 / 11	1x 750W HS	Yes	Std	No
7X10100TLA	1x Silver 4210R 10C 100W 2.4G	1x 16GB 1Rx4 2933	530-8i	8x 2.5" HS / 20** Open bay	Open	8 / 11	1x 750W HS	Yes	Std	No
7X10100ULA	1x Silver 4210R 10C 100W 2.4G	1x 16GB 1Rx4 2933	530-8i	8x 2.5" HS / 20** Open bay	Open	8 / 11	1x 750W HS	Yes	Std	No
7X10100VLA	1x Silver 4210R 10C 100W 2.4G	1x 16GB 1Rx4 2933	530-8i	8x 2.5" HS / 20** Open bay	Open	8 / 11	1x 750W HS	Yes	Std	No

† Processor detail: Quantity, model, core count, TDP, core frequency
** 20 drive bays includes 4x 2.5" HS drive bays with media bay conversion
* Additionally supports 4x 2.5" HS drive bays with media bay conversion
‡ Physical security includes both security door & intrusion switch

Models for USA and Canada

Table 11. Models for USA and Canada

Model	Intel Xeon processors†	Memory	RAID	Drive bays Drives	Optical	Slots	Power supplies	Power cords	XCC Level	Physical security‡
Standard models										
7X10A0EJNA	1x Bronze 3204 6C 85W 1.9G	1x 32GB 2933	5350-8i	4x 3.5" HS / 8* Open bay	Open	8 / 11	1x 750W HS	Yes	Ent	No
7X10A0EGNA	1x Silver 4208 8C 85W 2.1G	1x 32GB 2933	5350-8i	8x 3.5" HS / 8* Open bay	Open	8 / 11	1x 750W HS	Yes	Ent	No
7X10A0ELNA	1x Silver 4208 8C 85W 2.1G	1x 32GB 2933	5350-8i	8x 2.5" HS / 20** Open bay	Open	8 / 11	1x 750W HS	Yes	Ent	No
7X10100RNA	1x Gold 6209U 20C 125W 2.1G	2x 8GB 2933	430-8i HBA	8x 2.5" HS / 20** Open bay	Open	8 / 11	1x 1100W HS	No	Adv	No

† Processor detail: Quantity, model, core count, TDP, core frequency
** 20 drive bays includes 4x 2.5" HS drive bays with media bay conversion
* Additionally supports 4x 2.5" HS drive bays with media bay conversion
‡ Physical security includes both security door & intrusion switch

Processors

The ST550 supports the Bronze, Silver, Gold, and Platinum level processors in the family of second-generation Intel Xeon Scalable processors. The server supports the processor options that are listed in the following table. The server supports up to two processors.

Topics in this section:

- Processor options
- Continued support for 1st Gen Intel Xeon Scalable processors
- Memory capacity of processors
- Processor features
- UEFI operating modes

Processor support: Both 1st Gen and 2nd Gen Intel Xeon SP processors are supported. For supported 1st Gen processors, see the Continued support for 1st Gen Intel Xeon Scalable processors section.

Processor options

The following table lists the supported processors. All processors listed have the following characteristics:

- Second-generation Intel Xeon Scalable processors (formerly codenamed "Cascade Lake")
- 14 nm process technology
- Six DDR4 memory channels
- 48 PCIe 3.0 I/O lanes
- 1 MB L2 cache
- 1.375 MB or more L3 cache per core
- Intel Hyper-Threading Technology (except Bronze processors)
- Intel Turbo Boost Technology 2.0 (except Bronze processors)
- Intel Advanced Vector Extensions 512 (AVX-512)
- Two Intel Ultra Path Interconnect (UPI) links at up to 10.4 GT/s

Some processors include a suffix letter in the processor model number:

- L: Large memory tier (supports total memory up to 4.5TB)
- M: Medium memory tier (supports total memory up to 2TB)
- N: NFV optimized
- S: Search optimized
- T: High Tcase
- U: Single socket
- V: VM Density optimized
- Y: Speed Select

Tip: B is not an official suffix, but instead used by Intel to distinguish between the Xeon Gold 5218 and the Xeon Gold 5218B processors. These two processor models have the same core counts, frequencies, and features, however they are based on different die configurations. You should not install 5218 and 5218B processors in the same server.

Tip: The option part numbers listed in the table below includes the processor heatsink and an additional system fan.

Table 12. Second-generation Intel Xeon Scalable processor selections

Part number*	Feature code	Description	Maximum supported
4XG7A14813	B4HU	Intel Xeon Bronze 3204 6C 85W 1.9GHz Processor	2

Part number*	Feature code	Description	Maximum supported
4XG7A37997	B7N3	Intel Xeon Bronze 3206R 8C 85W 1.9GHz Processor	2
4XG7A14812	B4HT	Intel Xeon Silver 4208 8C 85W 2.1GHz Processor	2
4XG7A14881	B4P4	Intel Xeon Silver 4209T 8C 70W 2.2GHz Processor	2
4XG7A14811	B4HS	Intel Xeon Silver 4210 10C 85W 2.2GHz Processor	2
4XG7A37995	B7N5	Intel Xeon Silver 4210R 10C 100W 2.4GHz Processor	2
4XG7A14810	B4HR	Intel Xeon Silver 4214 12C 85W 2.2GHz Processor	2
4XG7A37994	B7N6	Intel Xeon Silver 4214R 12C 100W 2.4GHz Processor	2
4XG7A14840	B4NW	Intel Xeon Silver 4214Y 12/10/8C 85W 2.2GHz Processor	2
4XG7A14809	B4HQ	Intel Xeon Silver 4215 8C 85W 2.5GHz Processor	2
4XG7A14808	B4HP	Intel Xeon Silver 4216 16C 100W 2.1GHz Processor	2
4XG7A14807	B4HN	Intel Xeon Gold 5215 10C 85W 2.5GHz Processor	2
4XG7A15698	B4P9	Intel Xeon Gold 5215L 10C 85W 2.5GHz Processor	2
4XG7A14806	B4HM	Intel Xeon Gold 5217 8C 115W 3.0GHz Processor	2
4XG7A14805	B4HL	Intel Xeon Gold 5218 16C 125W 2.3GHz Processor	2
4XG7A15786	B6BS	Intel Xeon Gold 5218B 16C 125W 2.3GHz Processor	2
4XG7A63302	BAZS	Intel Xeon Gold 5218R 20C 125W 2.1GHz Processor	2
4XG7A37972	B4P3	Intel Xeon Gold 5218T 16C 105W 2.1GHz Processor	2
4XG7A14804	B4HK	Intel Xeon Gold 5220 18C 125W 2.2GHz Processor	2
4XG7A15860	B6CW	Intel Xeon Gold 5220S 18C 125W 2.7GHz Processor	2
4XG7A15858	B6CQ	Intel Xeon Gold 5220T 18C 105W 1.9GHz Processor	2
4XG7A15754	B5S1	Intel Xeon Gold 5222 4C 105W 3.8GHz Processor	2
None**	B6CX	Intel Xeon Gold 6209U 20C 125W 2.1GHz Processor	1**
4XG7A15859	B6CV	Intel Xeon Gold 6222V 20C 115W 1.8GHz Processor	2
4XG7A15856	B6CL	Intel Xeon Gold 6226 12C 125W 2.7GHz Processor	2
4XG7A14803	B4HJ	Intel Xeon Gold 6230 20C 125W 2.1GHz Processor	2
4XG7A15857	B6CP	Intel Xeon Gold 6230T 20C 125W 2.1GHz Processor	2
4XG7A14867	B4P2	Intel Xeon Gold 6238T 22C 125W 1.9GHz Processor	2
4XG7A15746	B5RZ	Intel Xeon Platinum 8253 16C 125W 2.2GHz Processor	2
4XG7A15739	B5S2	Intel Xeon Platinum 8256 4C 105W 3.8GHz Processor	2

* Option part numbers include the processor heatsink and an additional system fan.
** The 6209U processor is only supported one processor per server; as a result, there is no option part number for a second processor.

Continued support for 1st Gen Intel Xeon Scalable processors

The ST550 also continues to support the 1st Gen Intel Xeon Scalable processors (formerly codenamed "Skylake") listed in the following table.

Table 13. Long-life 1st Gen Intel Xeon Scalable processors

Part number	Feature code	Description
4XG7A07218	AWEH	ThinkSystem ST550 Intel Xeon Bronze 3106 8C 85W 1.7GHz Processor Option Kit
4XG7A07216	AWET	ThinkSystem ST550 Intel Xeon Silver 4109T 8C 70W 2.0GHz Processor Option Kit

Part number	Feature code	Description
4XG7A07215	AWEE	ThinkSystem ST550 Intel Xeon Silver 4110 8C 85W 2.1GHz Processor Option Kit
4XG7A09063	AWES	ThinkSystem ST550 Intel Xeon Silver 4114T 10C 85W 2.2GHz Processor Option Kit
4XG7A07212	AWER	ThinkSystem ST550 Intel Xeon Silver 4116 12C 85W 2.1GHz Processor Option Kit
4XG7A09062	AWEA	ThinkSystem ST550 Intel Xeon Silver 4116T 12C 85W 2.1GHz Processor Option Kit
7XG7A05790	No CTO*	ThinkSystem ST550 Intel Xeon Gold 5115 10C 85W 2.4GHz Processor Option Kit
7XG7A05789	AWEP	ThinkSystem ST550 Intel Xeon Gold 5118 12C 105W 2.3GHz Processor Option Kit
4XG7A09061	AWEQ	ThinkSystem ST550 Intel Xeon Gold 5119T 14C 85W 1.9GHz Processor Option Kit
7XG7A05787	AWE8	ThinkSystem ST550 Intel Xeon Gold 5120T 14C 105W 2.2GHz Processor Option Kit
7XG7A05785	AWEL	ThinkSystem ST550 Intel Xeon Gold 6126 12C 125W 2.6GHz Processor Option Kit
7XG7A05784	AWE5	ThinkSystem ST550 Intel Xeon Gold 6126T 12C 125W 2.6GHz Processor Option Kit
7XG7A05783	AWEN	ThinkSystem ST550 Intel Xeon Gold 6130 16C 125W 2.1GHz Processor Option Kit
7XG7A05782	AWE4	ThinkSystem ST550 Intel Xeon Gold 6130T 16C 125W 2.1GHz Processor Option Kit
4XG7A07211	AWDZ	ThinkSystem ST550 Intel Xeon Gold 6138 20C 125W 2.0GHz Processor Option Kit
4XG7A07209	No CTO*	ThinkSystem ST550 Intel Xeon Platinum 8153 16C 125W 2.0GHz Processor Option Kit

* Only available as a field upgrade for existing customers. Not available in CTO (configure to order) configurations.

For specifications of these processors, see the Intel Xeon Scalable Processor Reference for Lenovo ThinkSystem Servers:
https://lenovopress.com/lp1262-intel-xeon-sp-processor-reference#term=SKL

Memory capacity of processors

Second-generation Xeon Scalable processors are limited to the amount of memory they can address, as follows:

- Processors with an L suffix (eg 8280L): Up to 4.5 TB per processor
- Processors with an M suffix (eg 8280M): Up to 2 TB per processor
- All other processors: Up to 1 TB per processor

The calculation is based on each processor individually, not the total memory installed in the server. For example, a configuration using 12x 64GB DIMMs per server is 6x 64 GB per processor, which is 384 GB per processor. This means that neither an M nor an L processor is required

Tip: There are no memory configurations of the ST550 that require an L-suffix or an M-suffix processor.

Processor features

The following table compares the features of the supported second-generation Intel Xeon processors.

Abbreviations used in the table:

- UPI: Ultra Path Interconnect
- TDP: Thermal Design Power
- FMA: Number of Intel AVX-512 Fused-Multiply Add (FMA) units
- HT: Hyper-Threading
- TB: Turbo Boost 2.0
- VT: Virtualization Technology (includes VT-x and VT-d)
- SST-PP: Speed Select Technology - Performance Profile
- DCPMM: DC Persistent Memory Module support
- RAS: Reliability, Availability, and Serviceability: Std = Standard, Adv = Advanced

The processors that support SST-PP offer three distinct operating points that are defined by a core count with a base speed associated with that core count. The operating point is selected during the boot process and cannot be changed at runtime.

Table 14. Processor specifications

CPU model	Cores / threads	Core speed (Base / TB max)	L3 cache*	Max memory speed	Max memory per CPU	UPI links & speed	FMA units	TDP	HT	TB	VT	SST-PP	DCPMM	RAS
Intel Xeon 3200 (Bronze) processors														
3204	6 / 6	1.9 / None	8.25 MB	2133 MHz	1 TB	2, 9.6 GT/s	1	85 W	N	N	Y	N	N	Std
3206R	8 / 8	1.9 GHz / None	11 MB	2133 MHz	1 TB	2, 9.6 GT/s	1	85 W	N	N	Y	N	N	Std
Intel Xeon 4200 (Silver) processors														
4208	8 / 16	2.1 / 3.2 GHz	11 MB	2400 MHz	1 TB	2, 9.6 GT/s	1	85 W	Y	Y	Y	N	N	Std
4209T	8 / 16	2.2 / 3.2 GHz	11 MB	2400 MHz	1 TB	2, 9.6 GT/s	1	70 W	Y	Y	Y	N	N	Std
4210	10 / 20	2.2 / 3.2 GHz	13.75 MB	2400 MHz	1 TB	2, 9.6 GT/s	1	85 W	Y	Y	Y	N	N	Std
4210R	10 / 20	2.4 / 3.2 GHz	13.75 MB	2400 MHz	1 TB	2, 9.6 GT/s	1	100 W	Y	Y	Y	N	N	Std
4214	12 / 24	2.2 / 3.2 GHz	16.5 MB	2400 MHz	1 TB	2, 9.6 GT/s	1	85 W	Y	Y	Y	N	N	Std
4214R	12 / 24	2.4 / 3.5 GHz	16.5 MB	2400 MHz	1 TB	2, 9.6 GT/s	1	100 W	Y	Y	Y	N	N	Std
4214Y	12 / 24	2.2 / 3.2 GHz	16.5 MB	2400 MHz	1 TB	2, 9.6 GT/s	1	85 W	Y	Y	Y	Y	N	Std
	10 / 20	2.3 / 3.2 GHz												
	8 / 16	2.4 / 3.2 GHz												
4215	8 / 16	2.5 / 3.5 GHz	11 MB	2400 MHz	1 TB	2, 9.6 GT/s	1	85 W	Y	Y	Y	N	Y	Std
4216	16 / 32	2.1 / 3.2 GHz	22 MB	2400 MHz	1 TB	2, 9.6 GT/s	1	100 W	Y	Y	Y	N	N	Std
Intel Xeon 5200 (Gold) processors														
5215	10 / 20	2.5 / 3.4 GHz	13.75 MB	2666 MHz	1 TB	2, 10.4 GT/s	1	85 W	Y	Y	Y	N	Y	Adv
5215L	10 / 20	2.5 / 3.4 GHz	13.75 MB	2666 MHz	4.5 TB	2, 10.4 GT/s	1	85 W	Y	Y	Y	N	Y	Adv
5217	8 / 16	3.0 / 3.7 GHz	11 MB	2666 MHz	1 TB	2, 10.4 GT/s	1	115 W	Y	Y	Y	N	Y	Adv
5218**	16 / 32	2.3 / 3.9 GHz	22 MB	2666 MHz	1 TB	2, 10.4 GT/s	1	125 W	Y	Y	Y	N	Y	Adv
5218B**	16 / 32	2.3 / 3.9 GHz	22 MB	2666 MHz	1 TB	2, 10.4 GT/s	1	125 W	Y	Y	Y	N	Y	Adv
5218R	20 / 40	2.1 / 4.0 GHz	27.5 MB	2666 MHz	1 TB	2, 10.4 GT/s	1	125 W	Y	Y	Y	N	Y	Adv
5218T	16 / 32	2.1 / 3.9 GHz	22 MB	2666 MHz	1 TB	2, 10.4 GT/s	1	105 W	Y	Y	Y	N	Y	Adv
5220	18 / 36	2.2 / 3.9 GHz	24.75 MB	2666 MHz	1 TB	2, 10.4 GT/s	1	125 W	Y	Y	Y	N	Y	Adv
5220S	18 / 36	2.7 / 3.9 GHz	24.75 MB	2666 MHz	1 TB	2, 10.4 GT/s	1	125 W	Y	Y	Y	N	Y	Adv
5220T	18 / 36	1.9 / 3.9 GHz	24.75 MB	2666 MHz	1 TB	2, 10.4 GT/s	1	105 W	Y	Y	Y	N	Y	Adv
5222	4 / 8	3.8 / 3.9 GHz	16.5 MB*	2933 MHz	1 TB	2, 10.4 GT/s	2	105 W	Y	Y	Y	N	Y	Adv
Intel Xeon 6200 (Gold) processors														
6209U	20 / 40	2.1 / 3.9 GHz	27.5 MB	2933 MHz	1 TB	None	2	125 W	Y	Y	Y	N	Y	Adv
6222V	20 / 40	1.8 / 3.6 GHz	27.5 MB	2400 MHz	1 TB	3, 10.4 GT/s	2	115 W	Y	Y	Y	N	Y	Adv

CPU model	Cores / threads	Core speed (Base / TB max)	L3 cache*	Max memory speed	Max memory per CPU	UPI links & speed	FMA units	TDP	HT	TB	VT	SST-PP	DCPMM	RAS
6226	12 / 24	2.7 / 3.7 GHz	19.25 MB*	2933 MHz	1 TB	3, 10.4 GT/s	2	125 W	Y	Y	Y	N	Y	Adv
6230	20 / 40	2.1 / 3.9 GHz	27.5 MB	2933 MHz	1 TB	3, 10.4 GT/s	2	125 W	Y	Y	Y	N	Y	Adv
6230T	20 / 40	2.1 / 3.9 GHz	27.5 MB	2933 MHz	1 TB	3, 10.4 GT/s	2	125 W	Y	Y	Y	N	Y	Adv
6238T	22 / 44	1.9 / 3.7 GHz	30.25 MB	2933 MHz	1 TB	3, 10.4 GT/s	2	125 W	Y	Y	Y	N	Y	Adv
Intel Xeon 8200 (Platinum) processors														
8253	16 / 32	2.2 / 3.0 GHz	22 MB	2933 MHz	1 TB	3, 10.4 GT/s	2	125 W	Y	Y	Y	N	Y	Adv
8256	4 / 8	3.8 / 3.9 GHz	16.5 MB*	2933 MHz	1 TB	3, 10.4 GT/s	2	105 W	Y	Y	Y	N	Y	Adv

* L3 cache is 1.375 MB per core or larger. Processors with a larger L3 cache per core are marked with an *
** The Intel Xeon Gold 5218 and 5218B processors have similar specifications; however, they use different silicon designs and cannot be mixed in the same system.

UEFI operating modes

The ST550 offers preset operating modes that affect energy consumption and performance. These modes are a collection of predefined low-level UEFI settings that simplify the task of tuning the server to suit your business and workload requirements.

The following table lists the feature codes that allow you to specify the mode you wish to preset in the factory for CTO orders.

Table 15. UEFI operating mode presets in DCSC

Feature code	Description
BFYB	Operating mode selection for: "Maximum Performance Mode"
BFYC	Operating mode selection for: "Minimal Power Mode"
BFYD	Operating mode selection for: "Efficiency Favoring Power Savings Mode"
BFYE	Operating mode selection for: "Efficiency - Favoring Performance Mode"

The preset modes for the ST550 are as follows:

- **Maximum Performance Mode** (feature BFYB): Achieves maximum performance but with higher power consumption and lower energy efficiency.
- **Minimal Power Mode** (feature BFYC): Minimize the absolute power consumption of the system.
- **Efficiency Favoring Power Savings Mode** (feature BFYD): Maximize the performance/watt efficiency with a bias towards power savings. This is the favored mode for SPECpower benchmark testing, for example.
- **Efficiency Favoring Performance Mode** (feature BFYE): Maximize the performance/watt efficiency with a bias towards performance. This is the favored mode for Energy Star certification, for example.

For details about these preset modes, and all other performance and power efficiency UEFI settings offered in the ST550, see the paper "Tuning UEFI Settings for Performance and Energy Efficiency on Intel Xeon Scalable Processor-Based ThinkSystem Servers", available from https://lenovopress.lenovo.com/lp1477.

Memory options

The ST550 server supports Lenovo TruDDR4 memory. TruDDR4 memory uses the highest-quality components sourced from Tier 1 DRAM suppliers and only memory that meets strict requirements is selected. It is compatibility-tested and tuned to maximize performance and reliability.

TruDDR4 memory has a unique signature programmed into the DIMM, which enables ThinkSystem servers to verify whether the memory installed is qualified and supported. From a service and support standpoint, TruDDR4 memory automatically assumes the system's warranty, and service and support provided worldwide.

The ST550 supports up to 6 DIMMs per processor, for a total of 12 DIMMs when two processors are installed. Each processor has six memory channels, and supports one DIMM per channel.

With second-generation Intel Xeon Scalable processors, the ST550 supports 2666 MHz or 2933 MHz memory. It is supported to have a mix of 2933 MHz and 2666 MHz memory, however all memory will operate at the lower speed. In addition, if the processor selected has a lower memory bus speed (eg 2400 MHz or 2133 MHz - see the Processor options section), then all DIMMs will operate at that lower speed.

The following table lists the memory options that are available for the ST550 server. The table also indicates which processor generation is supported for each memory option.

Persistent Memory: Intel Optane DC Persistent Memory (DCPMM) is not supported in the ST550.

Table 16. Memory options

Part number	Feature code	Description	Maximum supported	Gen 1 CPU	Gen 2 CPU
2933 MHz RDIMMs					
4ZC7A08706	B4H1	ThinkSystem 8GB TruDDR4 2933MHz (1Rx8 1.2V) RDIMM	12 (6 per processor)	No	Yes
4ZC7A08707	B4LY	ThinkSystem 16GB TruDDR4 2933 MHz (1Rx4 1.2V) RDIMM	12 (6 per processor)	No	Yes
4ZC7A08708	B4H2	ThinkSystem 16GB TruDDR4 2933MHz (2Rx8 1.2V) RDIMM	12 (6 per processor)	No	Yes
4ZC7A08709	B4H3	ThinkSystem 32GB TruDDR4 2933MHz (2Rx4 1.2V) RDIMM	12 (6 per processor)	No	Yes
4ZC7A08710	B4H4	ThinkSystem 64GB TruDDR4 2933MHz (2Rx4 1.2V) RDIMM	12 (6 per processor)	No	Yes
2666 MHz RDIMMs					
7X77A01301	AUU1	ThinkSystem 8GB TruDDR4 2666 MHz (1Rx8 1.2V) RDIMM	12 (6 per processor)	Yes	No
7X77A01303	AUNC	ThinkSystem 16GB TruDDR4 2666 MHz (2Rx8 1.2V) RDIMM	12 (6 per processor)	Yes	Yes
7X77A01304	AUND	ThinkSystem 32GB TruDDR4 2666 MHz (2Rx4 1.2V) RDIMM	12 (6 per processor)	Yes	Yes

The following rules apply when selecting the memory configuration:

- The server supports RDIMMs and LRDIMMs.
- Mixing RDIMMs and LRDIMMs is not supported. Use either RDIMMs or LDRIMMs but not both.
- Mixing 2666 MHz and 2933 MHz DIMMs is supported. All memory will operate at the lower speed.
- Mixing x4 and x8 DIMMs is supported.
- For best performance, populate memory DIMMs in quantities of 6 per processor, so that all memory channels are used.

The following memory protection technologies are supported:

- ECC

- SDDC (for x4-based memory DIMMs; look for "x4" in the DIMM description)
- ADDDC (for x4-based memory DIMMs; Gold and Platinum processors only)
- Memory channel mirroring
- Memory rank sparing

If memory channel mirroring is used, then DIMMs must be installed in pairs (minimum of one pair per processor), and both DIMMs in a pair must be identical in type and size. 50% of the installed capacity is available to the operating system.

If memory rank sparing is used, then a minimum of one quad-rank DIMM or two single-rank or dual-rank DIMMs must be installed per populated channel (the DIMMs do not need to be identical). In rank sparing mode, one rank of a DIMM in each populated channel is reserved as spare memory. The largest rank in the channel will be automatically selected as the spare rank. The amount of memory available to the operating system depends on the number, capacity and rank counts of the DIMMs installed.

Internal storage

The ST550 supports 2.5-inch hot-swap, 3.5-inch hot-swap, and 3.5-inch simple-swap drives in a variety of drive bay configurations.

In this section:

- Backplanes and drive bays
- Adapters and cabling
- Field upgrades
- M.2 drives
- SED encryption key management with ISKLM

Drive bays and backplanes

The server supports up to 20 drive bays: It can support up to 16x 2.5-inch drives or 8x 3.5-inch drives, plus an additional 4x 2.5-inch drive bays installed in the space occupied by the two 5.25-inch media bays. Hot-swap (HS) drive configurations support SAS & SATA drives, and with an AnyBay backplane, can support up to four NVMe drives. Simple-swap (SS) drive configurations support SATA drives only. The server also supports one or two M.2 drives, installed in an M.2 adapter. The dual-M.2 adapter provides RAID 0 and 1 support.

The different drive bay configurations supported are shown in the following figure.

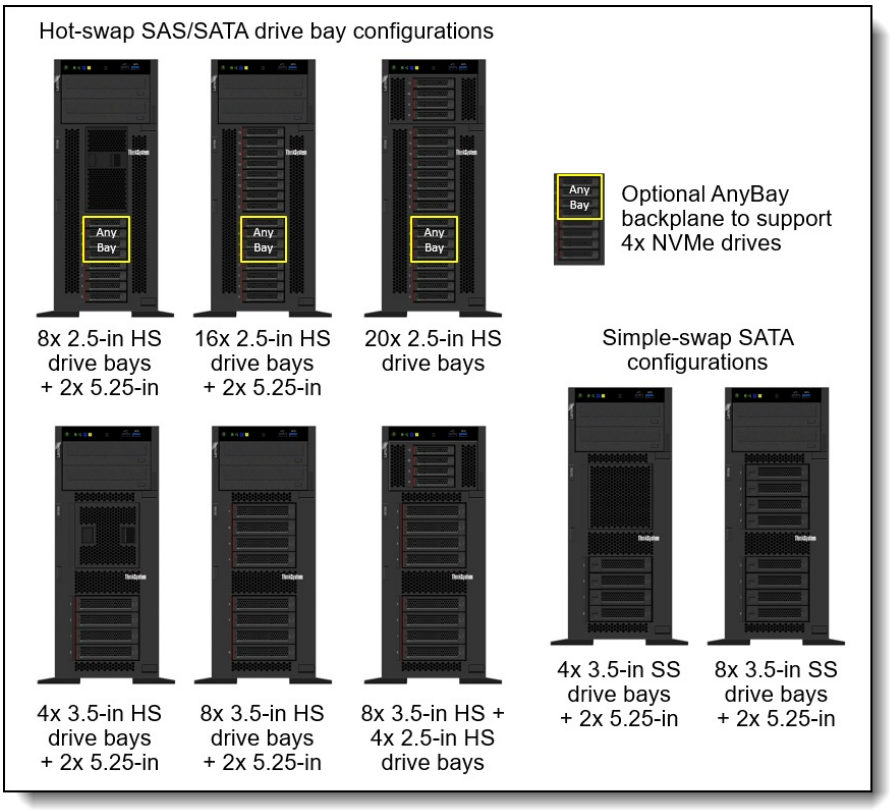

Figure 6. Internal drive bay configurations

The following table lists all available drive configurations.

Table 17. Drive configurations

Configuration	Backplane	5.25-inch media bays
2.5-inch hot-swap drive bay configurations		
8x 2.5-inch SAS/SATA	One 8x2.5-inch SAS/SATA	Available
8x 2.5-inch SAS/SATA, 4 bays supporting NVMe	One 8x2.5-inch AnyBay	Available
16x 2.5-inch SAS/SATA	Two 8x2.5-inch SAS/SATA	Available
16x 2.5-inch SAS/SATA, 4 bays supporting NVMe	One 8x2.5-inch SAS/SATA + One 8x2.5-inch AnyBay	Available
20x 2.5-inch SAS/SATA	Two 8x2.5-inch SAS/SATA + 4x2.5-inch Media Bay conversion	Converted to 2.5-inch drive bays
20x 2.5-inch SAS/SATA, 4 bays supporting NVMe	One 8x2.5-inch SAS/SATA + One 8x2.5-inch AnyBay + 4x2.5-inch Media Bay conversion	Converted to 2.5-inch drive bays
3.5-inch and 3.5+2.5-inch hot-swap drive bay hybrid configurations		
4x 3.5-inch SAS/SATA	One 4x3.5-inch SAS/SATA	Available
8x 3.5-inch SAS/SATA	One 8x3.5-inch SAS/SATA	Available
8x 3.5-inch SAS/SATA + 4x 2.5-inch SAS/SATA	One 8x3.5-inch SAS/SATA + 4x2.5-inch Media Bay conversion	Converted to 2.5-inch drive bays
3.5-inch simple-swap drive bay configurations		
4x 3.5-inch SATA	One Simple-swap bracket plate	Available
8x 3.5-inch SATA	Two Simple-swap bracket plates	Available

The drive backplanes used with these configurations are listed in the following table.

Table 18. Drive backplanes

Part number	Feature	Description	Purpose
None*	AVRN	ThinkSystem ST550 2.5" SATA/SAS 8-Bay Backplane	2.5-inch SAS/SATA
None*	AUR5	ThinkSystem 2U/Twr 2.5" AnyBay 8-Bay Backplane	2.5-inch AnyBay
None*	AVRQ	ThinkSystem ST550 4x3.5" Backplane	3.5-inch SAS/SATA
None*	AVRM	ThinkSystem ST550 2.5" SATA/SAS 4-Bay Backplane	Media bay conversion
None*	AVRY	ThinkSystem ST550 3.5" SATA 4-Bay Simple Swap Backplate	Simple-swap drives

* Backplanes are configure-to-order only, however upgrade kits are available that include backplanes, as described in the Field upgrades section below.

Adapters and cabling

This section describes the adapter and cabling requirements for each drive bay configuration.

Notes:

- For configurations with 16x 2.5-inch drive bays (i.e., two backplanes), you can select either one 16-port SAS/SATA adapter or two 8-port SAS/SATA adapters
- For configurations with 20x 2.5-inch drive bays, a single 24-port SAS/SATA adapter is used.
- For the use of AnyBay drive bays, a NVMe Switch adapter is used to provide the NVMe ports. The adapter is installed in slot 2 (which connects to processor 1).

The drive bay configurations are shown in the the subsections below. Where there are different adapter and cabling options, they are shown by the letters A, B, C, D. These configuration numbers are also referenced later in the Field upgrades section.

1. 8x 2.5-inch hot-swap drive bays, all SAS/SATA
2. 8x 2.5-inch hot-swap drive bays, where 4 of the bays are AnyBay
3. 16x 2.5-inch hot-swap drive bays, all SAS/SATA
4. 16x 2.5-inch hot-swap drive bays, where 4 of the bays are AnyBay
5. 20x 2.5-inch hot-swap drive bays, all SAS/SATA (4 of the bays are in Media Bay)
6. 20x 2.5-inch hot-swap drive bays, where 4 of the bays are AnyBay (4 of the bays are in Media Bay)
7. 4x 3.5-inch drive bays, all SAS/SATA
8. 8x 3.5-inch hot-swap hot-swap drive bays, all SAS/SATA
9. 8x 3.5-inch + 4x 2.5-in hot-swap drive bays, all SAS/SATA
10. 4x 3.5-inch simple-swap drive bays, SATA only
11. 8x 3.5-inch simple-swap drive bays, SATA only

Tip: The adapters are described in detail in the Controllers for internal storage section.

1. 8x 2.5-inch hot-swap drive bays, all SAS/SATA

In this drive bay configuration, all eight 2.5-inch hot-swap drives are connected to one 8-port SAS/SATA RAID adapter or HBA using two backplane cables, as shown in the following figure.

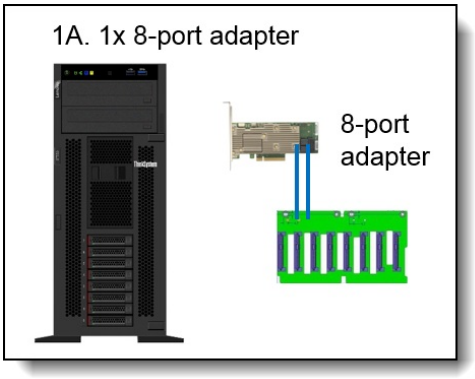

Figure 7. Adapter and cabling for 8x 2.5-inch drive bays, all SAS/SATA

2. 8x 2.5-inch hot-swap drive bays, where four of the bays are AnyBay

In 8x 2.5-inch drive-bay configurations where four of those bays are AnyBay drive bays, an 8-port SAS/SATA RAID adapter or HBA is needed plus an NVMe Switch Adapter to provide the four needed NVMe ports.

In this configuration you can have either up to eight SAS or SATA drives, or you can have up to four NVMe drives in the four AnyBay drive bays along with four SAS or SATA drives in the other bays.

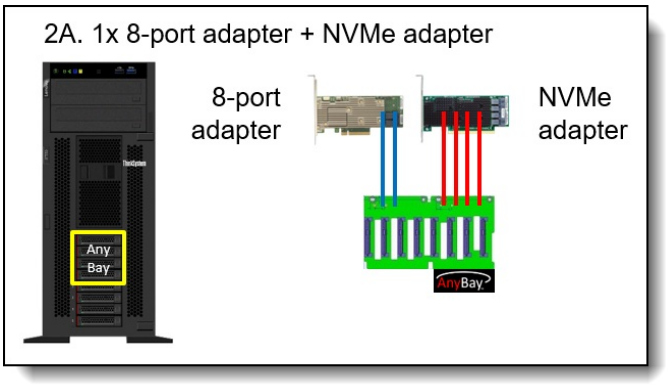

Figure 8. Adapter and cabling for 8x 2.5-inch drive bays, where 4 of the bays are AnyBay

3. 16x 2.5-inch hot-swap drive bays, all SAS/SATA

In 16-bay configurations where all 16 2.5-inch drive bays are SAS/SATA drives, you can use either two 8-port SAS/SATA RAID adapters or HBAs or one 16-port SAS/SATA RAID adapter or HBA. These choices are shown in the following figure.

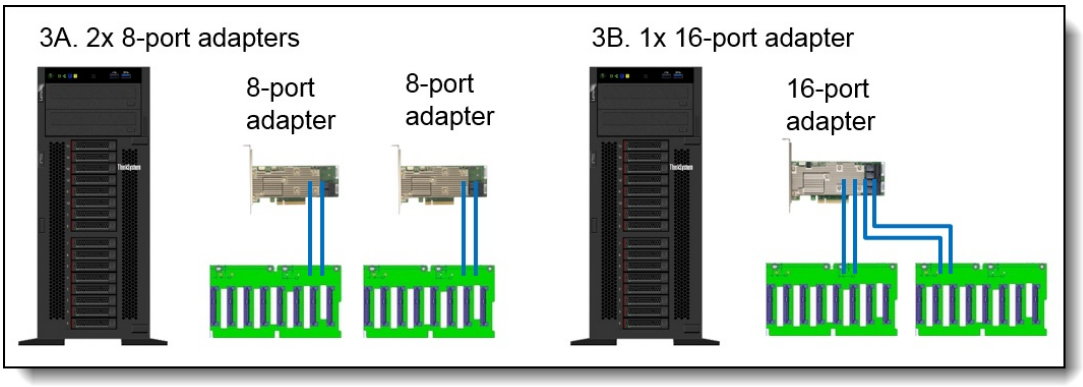

Figure 9. Adapter and cabling for 16 drive bays, all SAS/SATA

4. 16x 2.5-inch hot-swap drive bays, where four of the bays are AnyBay

In 16-drive configurations where four of the 2.5-inch bays are AnyBay drive bays, a 16-port SAS/SATA RAID adapter or HBA is needed plus an NVMe Switch Adapter to provide the four needed NVMe ports. The configurations are shown in the following figure.

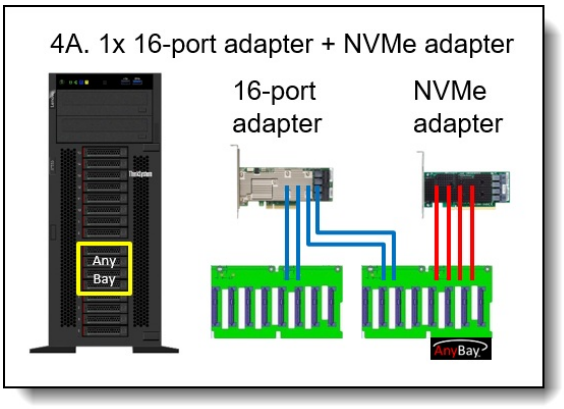

Figure 10. Adapter and cabling for 16 drive bays, where 4 of the bays are AnyBay

5. 20x 2.5-inch hot-swap drive bays, all SAS/SATA

In a 20-drive configuration, where all drives are SAS or SATA, all connectivity is provided by a single 24-port SAS/SATA RAID adapter. The top four drive bays are in place of the two 5.25" media bays. Connectivity is shown in the following figure.

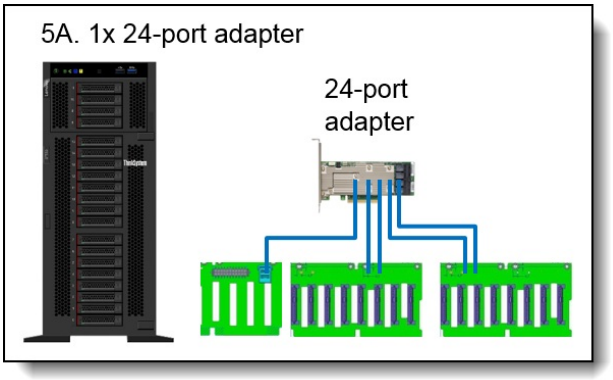

Figure 11. Adapter and cabling for 20 drive bays, all SAS/SATA

6. 20x 2.5-inch hot-swap drive bays, where four of the bays are AnyBay

In this 20-drive configuration, all drives can be SAS or SATA drives, or four can be NVMe drives. SAS/SATA connectivity is provided by a single 24-port SAS/SATA RAID adapter. NVMe connectivity is provided by the NVMe Switch Adapter. The top four drive bays are in place of the two 5.25" media bays. Connectivity is shown in the following figure.

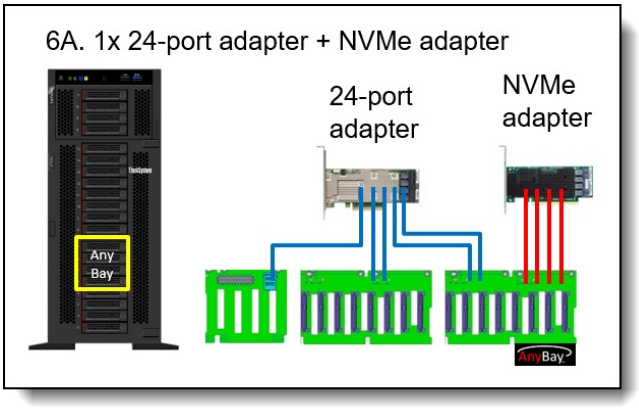

Figure 12. Adapter and cabling for 20 drive bays, where 4 of the bays are AnyBay

7. 4x 3.5-inch hot-swap drive bays, all SAS/SATA

In this drive bay configuration, four 3.5-inch hot-swap drives are connected to one 8-port SAS/SATA RAID adapter or HBA using a single backplane cable, as shown in the following figure.

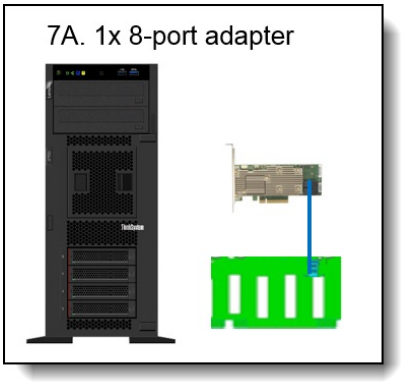

Figure 13. Adapter and cabling for 4x 3.5-inch drive bays, all SAS/SATA

8. 8x 3.5-inch hot-swap drive bays, all SAS/SATA

In this drive bay configuration, eight 3.5-inch hot-swap drives are connected to one 8-port SAS/SATA RAID adapter or HBA using two backplane cables, as shown in the following figure.

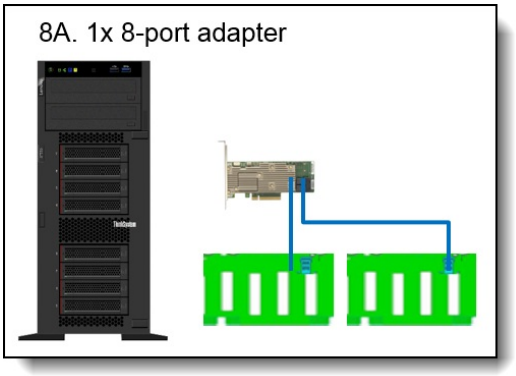

Figure 14. Adapter and cabling for 8x 3.5-inch drive bays, all SAS/SATA

9. 8x 3.5-inch + 4x 2.5-inch hot-swap drive bays, all SAS/SATA

In this combination drive configuration, eight 3.5-in drives and four 2.5-inch drives are supported. The top four drive bays are in place of the two 5.25" media bays. All connectivity can be provided by a single 16-port adapter or two 8-port adapters. Connectivity options are shown in the following figure.

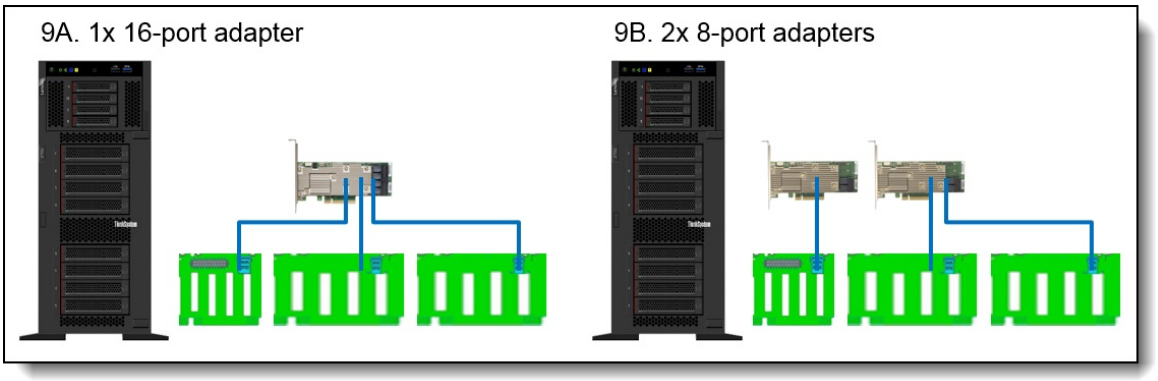

Figure 15. Adapter and cabling for 8x 3.5-inch + 4x 2.5-inch drive bays, all SAS/SATA

10. 4x 3.5-inch simple-swap drive bays, SATA only

In this configuration, the server supports four 3.5-inch simple-swap (SS) drive bays, which support only SATA HDDs and SSDs. The drives connect to a single simple-swap bracket plate, which in turn plugs into a mini-SAS HD connector on the system board.

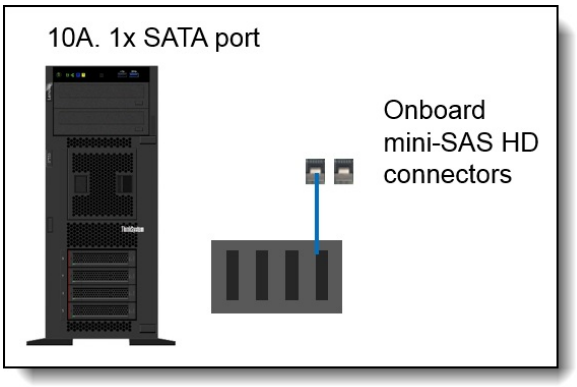

Figure 16. Adapter and cabling for 4x 3.5-inch simple-swap drive bays; SATA only

11. 8x 3.5-inch simple-swap drive bays, SATA only

In this configuration, the server supports eight 3.5-inch simple-swap drives bays, which support only SATA HDDs and SSDs. The drives connect to two simple-swap bracket plates, which in turn each plug into a mini-SAS HD connector on the system board.

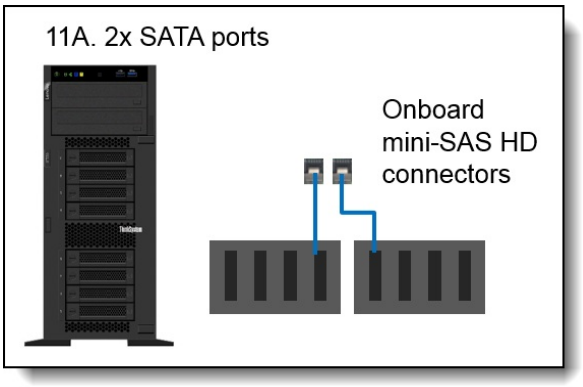

Figure 17. Adapter and cabling for 8x 3.5-inch simple-swap drive bays; SATA only

Field upgrades

The following table shows the backplane kits you can use after the initial purchase to upgrade the server to add additional drive bays.

Use with X40 adapters: These backplane kits in the table below include SAS/SATA cables for use with the onboard SATA controller or with RAID 930, 730, 530 adapters and 430 HBAs (collectively called X30 adapters). If you are adding or upgrading to RAID 940 adapters or 440 HBAs (collectively called X40 adapters), you will need to *also* order an X40 cable kit. See the Cable kits for 440 HBAs and RAID 940 adapters section for details.

Table 19. Drive backplane upgrades

Part number	Description	Purpose	Quantity supported
7XH7A05906	ThinkSystem ST550 2.5" SATA/SAS 8-Bay Backplane	Add 8x 2.5-inch SAS/SATA	2
7XH7A05907	ThinkSystem ST550 2.5" Anybay 8-Bay Backplane Kit	Add 8x 2.5-inch AnyBay	1
7XH7A05908*	ThinkSystem ST550 2.5" SATA/SAS 4-Bay Backplane (media bay conversion kit)	Add 4x 2.5-inch to media bay (replace existing 5.25" bays)	1
7XH7A05905	ThinkSystem ST550 3.5" SATA/SAS 4-Bay Backplane	Add 4x 3.5-inch HS SAS/SATA	2
7XH7A05904	ThinkSystem ST550 3.5" SATA 4-Bay Simple Swap Backplate	Add 4x 3.5-inch simple-swap	2

* The media bay conversion kit also requires an additional system fan if the server has only one processor. See the Fans and cooling section for details.

Each kit contains the backplane and the necessary cables for use with an X30 adapter. The AnyBay kit also including PCIe cables for NVMe drive connectivity. The 2.5" SATA/SAS 4-Bay Backplane Kit also includes the necessary 4x 2.5-inch drive-bay cage.

In addition to the backplane kits, you will need a RAID adapter or HBA, and if you are adding an AnyBay backplane, you'll also need an NVMe Switch adapter. The adapters are described in the Controllers for internal storage section.

Cable kits for 440 HBAs and RAID 940 adapters

The backplane kits listed in the preceding table include cables for use with the onboard SATA controller or with RAID 930, 730, 530 adapters and 430 HBAs (collectively called X30 adapters). If you wish to use the backplane kits with RAID 940 adapters or 440 HBAs (collectively called X40 adapters), then you will also need to order an additional X40 cable kit to use instead of the cables in the backplane kit, as listed in the following table.

Tip: When adding an X40 adapter, you will order both the backplane kit and the relevant X40 cable kit, however the SAS/SATA data cable(s) in the backplane kit will not be used.

Table 20. Cable kits for 440 HBAs and RAID 940 adapters

Backplane kits with X30 cables		X40 cable kits also needed (1 per server)	
7XH7A05906	ThinkSystem ST550 2.5" SATA/SAS 8-Bay Backplane	4XH7A61116	ThinkSystem ST550 2.5" SAS/SATA/AnyBay 8-Bay X40 RAID Cable Kit (contains cables for two backplanes)
7XH7A05907	ThinkSystem ST550 2.5" AnyBay 8-Bay Backplane Kit	4XH7A61116	ThinkSystem ST550 2.5" SAS/SATA/AnyBay 8-Bay X40 RAID Cable Kit (contains cables for two backplanes)
7XH7A05908	ThinkSystem ST550 2.5" SATA/SAS 4-Bay Backplane (media bay conversion kit)	4XH7A61118	ThinkSystem ST550 2.5" SAS/SATA 4-Bay X40 RAID Cable Kit
7XH7A05905	ThinkSystem ST550 3.5" SATA/SAS 4-Bay Backplane	4XH7A61119	ThinkSystem ST550 3.5" SAS/SATA 4-Bay X40 RAID Cable Kit (contains cables for two backplanes)
7XH7A05904	ThinkSystem ST550 3.5" SATA 4-Bay Simple Swap Backplate	None	Not supported

M.2 drives

The server supports one or two M.2 form-factor SATA drives for use as an operating system boot solution. With two M.2 drives configured, the drives are configured by default as a RAID-1 mirrored pair for redundancy.

The M.2 drives install into an M.2 adapter which in turn is installed in a dedicated slot on the system board. See the internal view of the server in the Components and connectors section for the location of the M.2 slot.

There are two M.2 adapters supported, as listed in the following table.

Table 21. M.2 components

Part number	Feature code	Description	Maximum supported
7Y37A01092	AUMU	ThinkSystem M.2 Enablement Kit (contains the Single M.2 Boot Adapter; supports 1 drive)	1
7Y37A01093	AUMV	ThinkSystem M.2 with Mirroring Enablement Kit (contains the Dual M.2 Boot Adapter, supports 1 or 2 drives)	1

Supported drives are listed in the Internal drive options section.

For details about M.2 components, see the *ThinkSystem M.2 Drives and M.2 Adapters* product guide: https://lenovopress.com/lp0769-thinksystem-m2-drives-adapters

SED encryption key management with ISKLM

The server supports self-encrypting drives (SEDs) as listed in the Internal drive options section. To effectively manage a large deployment of these drives in Lenovo servers, IBM Security Key Lifecycle Manager (SKLM) offers a centralized key management solution. A Lenovo Feature on Demand (FoD) upgrade is used to enable this SKLM support in the management processor of the server.

The following table lists the part numbers and feature codes for the upgrades.

Table 22. FoD upgrades for SKLM support

Part number	Feature code	Description
Security Key Lifecycle Manager - FoD (United States, Canada, Asia Pacific, and Japan)		
00D9998	A5U1	SKLM for System x/ThinkSystem w/SEDs - FoD per Install with 1 year S&S
00D9999	AS6C	SKLM for System x/ThinkSystem w/SEDs - FoD per Install with 3 year S&S
Security Key Lifecycle Manager - FoD (Latin America, Europe, Middle East, and Africa)		
00FP648	A5U1	SKLM for System x/ThinkSystem w/SEDs - FoD per Install with 1 year S&S
00FP649	AS6C	SKLM for System x/ThinkSystem w/SEDs - FoD per Install with 3 year S&S

The IBM Security Key Lifecycle Manager software is available from Lenovo using the ordering information listed in the following table.

Table 23. IBM Security Key Lifecycle Manager licenses

Part number	Description
7S0A007FWW	IBM Security Key Lifecycle Manager Basic Edition Install License + SW Subscription & Support 12 Months
7S0A007HWW	IBM Security Key Lifecycle Manager For Raw Decimal Terabyte Storage Resource Value Unit License + SW Subscription & Support 12 Months
7S0A007KWW	IBM Security Key Lifecycle Manager For Raw Decimal Petabyte Storage Resource Value Unit License + SW Subscription & Support 12 Months
7S0A007MWW	IBM Security Key Lifecycle Manager For Usable Decimal Terabyte Storage Resource Value Unit License + SW Subscription & Support 12 Months
7S0A007PWW	IBM Security Key Lifecycle Manager For Usable Decimal Petabyte Storage Resource Value Unit License + SW Subscription & Support 12 Months

Controllers for internal storage

The ST550 with hot-swap drives supports internal SAS and SATA drives with the addition of a RAID adapter or HBA. For NVMe support, the server supports the use of an NVMe Switch Adapter installed in a PCIe slot.

For simple-swap drive support, the ST550 uses two onboard 6Gb SATA ports to connect the four or eight simple-swap drives. These ports enable Intel RSTe for RAID functionality.

Virtualization support: The SATA ports can be used with virtualization hypervisors, including VMware ESXi, Linux KVM, Xen, and Microsoft Hyper-V, however support is limited to AHCI (non-RAID) mode. RSTe mode is not supported with virtualization hypervisors.

The following table lists the adapters used for the internal disk storage of the ST550 server.

Table 24. Controllers for internal storage - hot-swap drive support

Part number	Feature code	Description	Maximum supported	Slots supported
SAS/SATA HBA				
7Y37A01088	AUNL	ThinkSystem 430-8i SAS/SATA 12Gb HBA	2	All slots
4Y37A72480	BJHH	ThinkSystem 4350-8i SAS/SATA 12Gb HBA	2	All slots
4Y37A78601	BM51	ThinkSystem 440-8i SAS/SATA PCIe Gen4 12Gb HBA	2	All slots
7Y37A01089	AUNM	ThinkSystem 430-16i SAS/SATA 12Gb HBA	1	All slots
4Y37A78602	BM50	ThinkSystem 440-16i SAS/SATA PCIe Gen4 12Gb HBA	1	All slots
RAID adapters				
7Y37A01082	AUNG	ThinkSystem RAID 530-8i PCIe 12Gb Adapter	2	All slots
4Y37A78834	BMFT	ThinkSystem RAID 540-8i PCIe Gen4 12Gb Adapter	2	All slots
4Y37A72482	BJHK	ThinkSystem RAID 5350-8i PCIe 12Gb Adapter	2	All slots
7Y37A01083*	AUNH*	ThinkSystem RAID 730-8i 1GB Cache PCIe 12Gb Adapter	2	All slots
4Y37A09722	B4RQ	ThinkSystem RAID 730-8i 2GB Flash PCIe 12Gb Adapter	2	All slots
7Y37A01084	AUNJ	ThinkSystem RAID 930-8i 2GB Flash PCIe 12Gb Adapter	2	All slots
4Y37A72483	BJHL	ThinkSystem RAID 9350-8i 2GB Flash PCIe 12Gb Adapter	2	All slots
7Y37A01085	AUNK	ThinkSystem RAID 930-16i 4GB Flash PCIe 12Gb Adapter	1	All slots
4Y37A09721	B31E	ThinkSystem RAID 930-16i 8GB Flash PCIe 12Gb Adapter	1	All slots
7Y37A01086	AUV1	ThinkSystem RAID 930-24i 4GB Flash PCIe 12Gb Adapter	1	1,2
4Y37A09728	B8NY	ThinkSystem RAID 940-8i 4GB Flash PCIe Gen4 12Gb Adapter	2	All slots
4Y37A78600	BM35	ThinkSystem RAID 940-16i 4GB Flash PCIe Gen4 12Gb Adapter	1	All slots
4Y37A09730	B8NZ	ThinkSystem RAID 940-16i 8GB Flash PCIe Gen4 12Gb Adapter	1	All slots
4Y37A09733	B8P8	ThinkSystem RAID 940-32i 8GB Flash PCIe Gen4 12Gb Adapter	1	1,2
NVMe adapter				
7Y37A01081	AUV2	ThinkSystem 1610-4P NVMe Switch Adapter	1	2

* Market availability: The RAID 730-8i 1GB Cache adapter is not available in USA and Canada.

For a comparison of the functions of the supported storage adapters, see the ThinkSystem RAID Adapter and HBA Reference:
https://lenovopress.com/lp1288-thinksystem-raid-adapter-and-hba-reference#st550-support=ST550

Internal drive options

The following tables list the drive options for internal storage of the server.

2.5-inch hot-swap drives:

- 2.5-inch hot-swap 12 Gb SAS HDDs
- 2.5-inch hot-swap 6 Gb SATA HDDs
- 2.5-inch hot-swap 24 Gb SAS SSDs
- 2.5-inch hot-swap 12 Gb SAS SSDs
- 2.5-inch hot-swap 6 Gb SATA SSDs
- 2.5-inch hot-swap PCIe 4.0 NVMe SSDs
- 2.5-inch hot-swap PCIe 3.0 NVMe SSDs

3.5-inch hot-swap drives:

- 3.5-inch hot-swap 12 Gb SAS HDDs
- 3.5-inch hot-swap 6 Gb SATA HDDs
- 3.5-inch hot-swap 24 Gb SAS SSDs
- 3.5-inch hot-swap 12 Gb SAS SSDs
- 3.5-inch hot-swap 6 Gb SATA SSDs

Simple-swap drives:

- 3.5-inch simple-swap 6 Gb SATA HDDs

M.2 drives:

- M.2 SATA drives

M.2 drive support: The use of M.2 drives requires an additional adapter as described in the M.2 drives subsection.

SED support: The tables include a column to indicate which drives support SED encryption. The encryption functionality can be disabled if needed. Note: Not all SED-enabled drives have "SED" in the description.

PCIe 4.0 NVMe drive support: When installed in this server, PCIe 4.0 NVMe drives will operate at PCIe 3.0 speeds.

Table 25. 2.5-inch hot-swap 12 Gb SAS HDDs

Part number	Feature code	Description	SED support	Max Qty
2.5-inch hot-swap HDDs - 12 Gb SAS 15K				
7XB7A00021	AULV	ThinkSystem 2.5" 300GB 15K SAS 12Gb Hot Swap 512n HDD	No	20
7XB7A00022	AULW	ThinkSystem 2.5" 600GB 15K SAS 12Gb Hot Swap 512n HDD	No	20
7XB7A00023	AULX	ThinkSystem 2.5" 900GB 15K SAS 12Gb Hot Swap 512e HDD	No	20
2.5-inch hot-swap HDDs - 12 Gb SAS 10K				
7XB7A00024	AULY	ThinkSystem 2.5" 300GB 10K SAS 12Gb Hot Swap 512n HDD	No	20
7XB7A00025	AULZ	ThinkSystem 2.5" 600GB 10K SAS 12Gb Hot Swap 512n HDD	No	20
7XB7A00026	AUM0	ThinkSystem 2.5" 900GB 10K SAS 12Gb Hot Swap 512n HDD	No	20
7XB7A00027	AUM1	ThinkSystem 2.5" 1.2TB 10K SAS 12Gb Hot Swap 512n HDD	No	20
7XB7A00028	AUM2	ThinkSystem 2.5" 1.8TB 10K SAS 12Gb Hot Swap 512e HDD	No	20
7XB7A00069	B0YS	ThinkSystem 2.5" 2.4TB 10K SAS 12Gb Hot Swap 512e HDD	No	20
2.5-inch hot-swap HDDs - 12 Gb NL SAS				
7XB7A00034	AUM6	ThinkSystem 2.5" 1TB 7.2K SAS 12Gb Hot Swap 512n HDD	No	20
7XB7A00035	AUM7	ThinkSystem 2.5" 2TB 7.2K SAS 12Gb Hot Swap 512n HDD	No	20
2.5-inch hot-swap SED HDDs - 12 Gb SAS 10K				
7XB7A00031	AUM5	ThinkSystem 2.5" 600GB 10K SAS 12Gb Hot Swap 512n HDD SED	Support	20
7XB7A00033	B0YX	ThinkSystem 2.5" 1.2TB 10K SAS 12Gb Hot Swap 512n HDD SED	Support	20

Table 26. 2.5-inch hot-swap 6 Gb SATA HDDs

Part number	Feature code	Description	SED support	Max Qty
2.5-inch hot-swap HDDs - 6 Gb NL SATA				
7XB7A00036	AUUE	ThinkSystem 2.5" 1TB 7.2K SATA 6Gb Hot Swap 512n HDD	No	20
7XB7A00037	AUUJ	ThinkSystem 2.5" 2TB 7.2K SATA 6Gb Hot Swap 512e HDD	No	20

Table 27. 2.5-inch hot-swap 24 Gb SAS SSDs

Part number	Feature code	Description	SED support	Max Qty
2.5-inch hot-swap SSDs - 24 Gb SAS - Mixed Use/Mainstream (3-5 DWPD)				
4XB7A80340	BNW8	ThinkSystem 2.5" PM1655 800GB Mixed Use SAS 24Gb HS SSD	Support	20
4XB7A80341	BNW9	ThinkSystem 2.5" PM1655 1.6TB Mixed Use SAS 24Gb HS SSD	Support	20
4XB7A80342	BNW6	ThinkSystem 2.5" PM1655 3.2TB Mixed Use SAS 24Gb HS SSD	Support	20
4XB7A80343	BP3K	ThinkSystem 2.5" PM1655 6.4TB Mixed Use SAS 24Gb HS SSD	Support	20
2.5-inch hot-swap SSDs - 24 Gb SAS - Read Intensive/Entry/Capacity (<3 DWPD)				
4XB7A80318	BNWC	ThinkSystem 2.5" PM1653 960GB Read Intensive SAS 24Gb HS SSD	Support	20
4XB7A80319	BNWE	ThinkSystem 2.5" PM1653 1.92TB Read Intensive SAS 24Gb HS SSD	Support	20
4XB7A80320	BNWF	ThinkSystem 2.5" PM1653 3.84TB Read Intensive SAS 24Gb HS SSD	Support	20
4XB7A80321	BP3E	ThinkSystem 2.5" PM1653 7.68TB Read Intensive SAS 24Gb HS SSD	Support	20
4XB7A80322	BP3J	ThinkSystem 2.5" PM1653 15.36TB Read Intensive SAS 24Gb HS SSD	Support	20
4XB7A80323	BP3D	ThinkSystem 2.5" PM1653 30.72TB Read Intensive SAS 24Gb HS SSD	Support	20

Table 28. 2.5-inch hot-swap 12 Gb SAS SSDs

Part number	Feature code	Description	SED support	Max Qty
2.5-inch hot-swap SSDs - 12 Gb SAS - Mixed Use/Mainstream (3-5 DWPD)				
4XB7A17062	B8HU	ThinkSystem 2.5" PM1645a 800GB Mainstream SAS 12Gb Hot Swap SSD	No	20
4XB7A17063	B8J4	ThinkSystem 2.5" PM1645a 1.6TB Mainstream SAS 12Gb Hot Swap SSD	No	20
4XB7A17064	B8JD	ThinkSystem 2.5" PM1645a 3.2TB Mainstream SAS 12Gb Hot Swap SSD	No	20
4XB7A17065	B8JA	ThinkSystem 2.5" PM1645a 6.4TB Mainstream SAS 12Gb Hot Swap SSD	No	20
2.5-inch hot-swap SSDs - 12 Gb SAS - Read Intensive/Entry/Capacity (<3 DWPD)				
4XB7A38175	B91A	ThinkSystem 2.5" PM1643a 960GB Entry SAS 12Gb Hot Swap SSD	No	20
4XB7A38176	B91B	ThinkSystem 2.5" PM1643a 1.92TB Entry SAS 12Gb Hot Swap SSD	No	20
4XB7A17054	B91C	ThinkSystem 2.5" PM1643a 3.84TB Entry SAS 12Gb Hot Swap SSD	No	20
4XB7A17055	B91D	ThinkSystem 2.5" PM1643a 7.68TB Entry SAS 12Gb Hot Swap SSD	No	20

Table 29. 2.5-inch hot-swap 6 Gb SATA SSDs

Part number	Feature code	Description	SED support	Max Qty
2.5-inch hot-swap SSDs - 6 Gb SATA - Mixed Use/Mainstream (3-5 DWPD)				
4XB7A82289	BQ21	ThinkSystem 2.5" 5400 MAX 480GB Mixed Use SATA 6Gb HS SSD	Support	20
4XB7A82290	BQ24	ThinkSystem 2.5" 5400 MAX 960GB Mixed Use SATA 6Gb HS SSD	Support	20
4XB7A82291	BQ22	ThinkSystem 2.5" 5400 MAX 1.92TB Mixed Use SATA 6Gb HS SSD	Support	20
4XB7A82292	BQ23	ThinkSystem 2.5" 5400 MAX 3.84TB Mixed Use SATA 6Gb HS SSD	Support	20

Part number	Feature code	Description	SED support	Max Qty
4XB7A17125	BA7Q	ThinkSystem 2.5" S4620 480GB Mixed Use SATA 6Gb HS SSD	No	20
4XB7A17126	BA4T	ThinkSystem 2.5" S4620 960GB Mixed Use SATA 6Gb HS SSD	No	20
4XB7A17127	BA4U	ThinkSystem 2.5" S4620 1.92TB Mixed Use SATA 6Gb HS SSD	No	20
4XB7A17128	BK7L	ThinkSystem 2.5" S4620 3.84TB Mixed Use SATA 6Gb HS SSD	No	20
4XB7A17087	B8J1	ThinkSystem 2.5" 5300 240GB Mainstream SATA 6Gb Hot Swap SSD	No	20
4XB7A17088	B8HY	ThinkSystem 2.5" 5300 480GB Mainstream SATA 6Gb Hot Swap SSD	No	20
4XB7A17089	B8J6	ThinkSystem 2.5" 5300 960GB Mainstream SATA 6Gb Hot Swap SSD	No	20
4XB7A17090	B8JE	ThinkSystem 2.5" 5300 1.92TB Mainstream SATA 6Gb Hot Swap SSD	No	20
4XB7A17091	B8J7	ThinkSystem 2.5" 5300 3.84TB Mainstream SATA 6Gb Hot Swap SSD	No	20
4XB7A13633	B49L	ThinkSystem 2.5" S4610 240GB Mixed Use SATA 6Gb HS SSD	No	20
4XB7A13637	B49Q	ThinkSystem 2.5" S4610 3.84TB Mixed Use SATA 6Gb HS SSD	No	20
2.5-inch hot-swap SSDs - 6 Gb SATA - Read Intensive/Entry (<3 DWPD)				
4XB7A82258	BQ1Q	ThinkSystem 2.5" 5400 PRO 240GB Read Intensive SATA 6Gb HS SSD	Support	20
4XB7A82259	BQ1P	ThinkSystem 2.5" 5400 PRO 480GB Read Intensive SATA 6Gb HS SSD	Support	20
4XB7A82260	BQ1R	ThinkSystem 2.5" 5400 PRO 960GB Read Intensive SATA 6Gb HS SSD	Support	20
4XB7A82261	BQ1X	ThinkSystem 2.5" 5400 PRO 1.92TB Read Intensive SATA 6Gb HS SSD	Support	20
4XB7A82262	BQ1S	ThinkSystem 2.5" 5400 PRO 3.84TB Read Intensive SATA 6Gb HS SSD	Support	20
4XB7A82263	BQ1T	ThinkSystem 2.5" 5400 PRO 7.68TB Read Intensive SATA 6Gb HS SSD	Support	20
4XB7A72438	BM8B	ThinkSystem 2.5" PM893 480GB Read Intensive SATA 6Gb HS SSD	No	20
4XB7A72439	BM8A	ThinkSystem 2.5" PM893 960GB Read Intensive SATA 6Gb HS SSD	No	20
4XB7A72440	BM89	ThinkSystem 2.5" PM893 1.92TB Read Intensive SATA 6Gb HS SSD	No	20
4XB7A72441	BM88	ThinkSystem 2.5" PM893 3.84TB Read Intensive SATA 6Gb HS SSD	No	20
4XB7A72442	BM87	ThinkSystem 2.5" PM893 7.68TB Read Intensive SATA 6Gb HS SSD	No	20
4XB7A17072	B99D	ThinkSystem 2.5" S4520 240GB Read Intensive SATA 6Gb HS SSD	No	20
4XB7A17101	BA7G	ThinkSystem 2.5" S4520 480GB Read Intensive SATA 6Gb HS SSD	No	20
4XB7A17102	BA7H	ThinkSystem 2.5" S4520 960GB Read Intensive SATA 6Gb HS SSD	No	20
4XB7A17103	BA7J	ThinkSystem 2.5" S4520 1.92TB Read Intensive SATA 6Gb HS SSD	No	20
4XB7A17104	BK77	ThinkSystem 2.5" S4520 3.84TB Read Intensive SATA 6Gb HS SSD	No	20
4XB7A17105	BK78	ThinkSystem 2.5" S4520 7.68TB Read Intensive SATA 6Gb HS SSD	No	20
4XB7A38271	BCTC	ThinkSystem 2.5" Multi Vendor 240GB Entry SATA 6Gb Hot Swap SSD	No	20
4XB7A38272	BCTD	ThinkSystem 2.5" Multi Vendor 480GB Entry SATA 6Gb Hot Swap SSD	No	20
4XB7A38273	BCTE	ThinkSystem 2.5" Multi Vendor 960GB Entry SATA 6Gb Hot Swap SSD	No	20
4XB7A38274	BCTF	ThinkSystem 2.5" Multi Vendor 1.92TB Entry SATA 6Gb Hot Swap SSD	No	20
4XB7A38275	BCTG	ThinkSystem 2.5" Multi Vendor 3.84TB Entry SATA 6Gb Hot Swap SSD	No	20
4XB7A17075	B8HV	ThinkSystem 2.5" 5300 240GB Entry SATA 6Gb Hot Swap SSD	No	20
4XB7A17076	B8JM	ThinkSystem 2.5" 5300 480GB Entry SATA 6Gb Hot Swap SSD	No	20

Part number	Feature code	Description	SED support	Max Qty
4XB7A17077	B8HP	ThinkSystem 2.5" 5300 960GB Entry SATA 6Gb Hot Swap SSD	No	20
4XB7A17078	B8J5	ThinkSystem 2.5" 5300 1.92TB Entry SATA 6Gb Hot Swap SSD	No	20
4XB7A17079	B8JP	ThinkSystem 2.5" 5300 3.84TB Entry SATA 6Gb Hot Swap SSD	No	20
4XB7A17080	B8J2	ThinkSystem 2.5" 5300 7.68TB Entry SATA 6Gb Hot Swap SSD	No	20
4XB7A38185	B9AC	ThinkSystem 2.5" 5210 960GB Entry SATA 6Gb Hot Swap QLC SSD	No	20
4XB7A38144	B7EW	ThinkSystem 2.5" 5210 1.92TB Entry SATA 6Gb Hot Swap QLC SSD	No	20
4XB7A38145	B7EX	ThinkSystem 2.5" 5210 3.84TB Entry SATA 6Gb Hot Swap QLC SSD	No	20
4XB7A38146	B7EY	ThinkSystem 2.5" 5210 7.68TB Entry SATA 6Gb Hot Swap QLC SSD	No	20
4XB7A10197	B34K	ThinkSystem 2.5" PM883 960GB Entry SATA 6Gb Hot Swap SSD	No	20
4XB7A10198	B34L	ThinkSystem 2.5" PM883 1.92TB Entry SATA 6Gb Hot Swap SSD	No	20
4XB7A10200	B4D2	ThinkSystem 2.5" PM883 7.68TB Entry SATA 6Gb Hot Swap SSD	No	20

Table 30. 2.5-inch hot-swap PCIe 4.0 NVMe SSDs

Part number	Feature code	Description	SED support	Max Qty
2.5-inch SSDs - U.3 PCIe 4.0 NVMe - Read Intensive/Entry (<3 DWPD)				
4XB7A79646	BNF3	ThinkSystem 2.5" U.3 7450 PRO 960GB Read Intensive NVMe PCIe 4.0 x4 HS SSD	Support	4
4XB7A79647	BNF2	ThinkSystem 2.5" U.3 7450 PRO 1.92TB Read Intensive NVMe PCIe 4.0 x4 HS SSD	Support	4
4XB7A79648	BNF5	ThinkSystem 2.5" U.3 7450 PRO 3.84TB Read Intensive NVMe PCIe 4.0 x4 HS SSD	Support	4
4XB7A79649	BNF4	ThinkSystem 2.5" U.3 7450 PRO 7.68TB Read Intensive NVMe PCIe 4.0 x4 HS SSD	Support	4
4XB7A83097	BQAV	ThinkSystem 2.5" U.3 7450 PRO 15.36TB Read Intensive NVMe PCIe 4.0 x4 HS SSD	Support	4

Note: NVMe PCIe SSDs support surprise hot removal and hot insertion, provided the operating system supports PCIe SSD hot-swap.

Table 31. 2.5-inch hot-swap PCIe 3.0 NVMe SSDs

Part number	Feature code	Description	SED support	Max Qty
2.5-inch SSDs - U.2 PCIe 3.0 NVMe - Read Intensive/Entry (<3 DWPD)				
4XB7A10202	B58F	ThinkSystem U.2 Intel P4510 1.0TB Entry NVMe PCIe3.0 x4 Hot Swap SSD	No	4
4XB7A10205	B58H	ThinkSystem U.2 Intel P4510 4.0TB Entry NVMe PCIe3.0 x4 Hot Swap SSD	No	4
4XB7A10175	B34N	ThinkSystem U.2 PM983 1.92TB Entry NVMe PCIe 3.0 x4 Hot Swap SSD	No	4
4XB7A10176	B34P	ThinkSystem U.2 PM983 3.84TB Entry NVMe PCIe 3.0 x4 Hot Swap SSD	No	4
4XB7A10177	B4D3	ThinkSystem U.2 PM983 7.68TB Entry NVMe PCIe3.0 x4 Hot Swap SSD	No	4

Note: NVMe PCIe SSDs support surprise hot removal and hot insertion, provided the operating system supports PCIe SSD hot-swap.

Table 32. 3.5-inch hot-swap 12 Gb SAS HDDs

Part number	Feature code	Description	SED support	Max Qty
3.5-inch hot-swap HDDs - 12 Gb SAS 15K				
7XB7A00038	AUU2	ThinkSystem 3.5" 300GB 15K SAS 12Gb Hot Swap 512n HDD	No	8
7XB7A00039	AUU3	ThinkSystem 3.5" 600GB 15K SAS 12Gb Hot Swap 512n HDD	No	8
3.5-inch hot-swap HDDs - 12 Gb NL SAS				
7XB7A00042	AUU5	ThinkSystem 3.5" 2TB 7.2K SAS 12Gb Hot Swap 512n HDD	No	8
7XB7A00043	AUU6	ThinkSystem 3.5" 4TB 7.2K SAS 12Gb Hot Swap 512n HDD	No	8
7XB7A00044	AUU7	ThinkSystem 3.5" 6TB 7.2K SAS 12Gb Hot Swap 512e HDD	No	8
7XB7A00045	B0YR	ThinkSystem 3.5" 8TB 7.2K SAS 12Gb Hot Swap 512e HDD	No	8
7XB7A00046	AUUG	ThinkSystem 3.5" 10TB 7.2K SAS 12Gb Hot Swap 512e HDD	No	8
7XB7A00067	B117	ThinkSystem 3.5" 12TB 7.2K SAS 12Gb Hot Swap 512e HDD	No	8
4XB7A13906	B496	ThinkSystem 3.5" 14TB 7.2K SAS 12Gb Hot Swap 512e HDD	No	8
4XB7A13911	B7EZ	ThinkSystem 3.5" 16TB 7.2K SAS 12Gb Hot Swap 512e HDD	No	8
4XB7A38266	BCFP	ThinkSystem 3.5" 18TB 7.2K SAS 12Gb Hot Swap 512e HDD	No	8
4XB7A80353	BPKU	ThinkSystem 3.5" 20TB 7.2K SAS 12Gb Hot Swap 512e HDD	No	8

Table 33. 3.5-inch hot-swap 6 Gb SATA HDDs

Part number	Feature code	Description	SED support	Max Qty
3.5-inch hot-swap HDDs - 6 Gb NL SATA				
7XB7A00049	AUUF	ThinkSystem 3.5" 1TB 7.2K SATA 6Gb Hot Swap 512n HDD	No	8
7XB7A00050	AUUD	ThinkSystem 3.5" 2TB 7.2K SATA 6Gb Hot Swap 512n HDD	No	8
7XB7A00051	AUU8	ThinkSystem 3.5" 4TB 7.2K SATA 6Gb Hot Swap 512n HDD	No	8
7XB7A00052	AUUA	ThinkSystem 3.5" 6TB 7.2K SATA 6Gb Hot Swap 512e HDD	No	8
7XB7A00053	AUU9	ThinkSystem 3.5" 8TB 7.2K SATA 6Gb Hot Swap 512e HDD	No	8
7XB7A00054	AUUB	ThinkSystem 3.5" 10TB 7.2K SATA 6Gb Hot Swap 512e HDD	No	8
7XB7A00068	B118	ThinkSystem 3.5" 12TB 7.2K SATA 6Gb Hot Swap 512e HDD	No	8
4XB7A13907	B497	ThinkSystem 3.5" 14TB 7.2K SATA 6Gb Hot Swap 512e HDD	No	8
4XB7A13914	B7F0	ThinkSystem 3.5" 16TB 7.2K SATA 6Gb Hot Swap 512e HDD	No	8
4XB7A38130	BCFH	ThinkSystem 3.5" 18TB 7.2K SATA 6Gb Hot Swap 512e HDD	No	8
4XB7A80354	BPKV	ThinkSystem 3.5" 20TB 7.2K SATA 6Gb Hot Swap 512e HDD	No	8

Table 34. 3.5-inch hot-swap 24 Gb SAS SSDs

Part number	Feature code	Description	SED support	Max Qty
3.5-inch hot-swap SSDs - 24 Gb SAS - Mixed Use/Mainstream (3-5 DWPD)				
4XB7A80344	BNW7	ThinkSystem 3.5" PM1655 800GB Mixed Use SAS 24Gb HS SSD	Support	8
4XB7A80345	BNWA	ThinkSystem 3.5" PM1655 1.6TB Mixed Use SAS 24Gb HS SSD	Support	8
4XB7A80346	BNWB	ThinkSystem 3.5" PM1655 3.2TB Mixed Use SAS 24Gb HS SSD	Support	8
4XB7A80347	BP3G	ThinkSystem 3.5" PM1655 6.4TB Mixed Use SAS 24Gb HS SSD	Support	8
3.5-inch hot-swap SSDs - 24 Gb SAS - Read Intensive/Entry/Capacity (<3 DWPD)				
4XB7A80324	BNWD	ThinkSystem 3.5" PM1653 960GB Read Intensive SAS 24Gb HS SSD	Support	8
4XB7A80325	BNWG	ThinkSystem 3.5" PM1653 1.92TB Read Intensive SAS 24Gb HS SSD	Support	8
4XB7A80326	BNWH	ThinkSystem 3.5" PM1653 3.84TB Read Intensive SAS 24Gb HS SSD	Support	8
4XB7A80327	BP3F	ThinkSystem 3.5" PM1653 7.68TB Read Intensive SAS 24Gb HS SSD	Support	8
4XB7A80328	BP3H	ThinkSystem 3.5" PM1653 15.36TB Read Intensive SAS 24Gb HS SSD	Support	8

Table 35. 3.5-inch hot-swap 12 Gb SAS SSDs

Part number	Feature code	Description	SED support	Max Qty
3.5-inch hot-swap SSDs - 12 Gb SAS - Mixed Use/Mainstream (3-5 DWPD)				
4XB7A17066	B8HT	ThinkSystem 3.5" PM1645a 800GB Mainstream SAS 12Gb Hot Swap SSD	No	8
4XB7A17043	B8JN	ThinkSystem 3.5" PM1645a 1.6TB Mainstream SAS 12Gb Hot Swap SSD	No	8
4XB7A17067	B8JK	ThinkSystem 3.5" PM1645a 3.2TB Mainstream SAS 12Gb Hot Swap SSD	No	8
4XB7A17068	B8JG	ThinkSystem 3.5" PM1645a 6.4TB Mainstream SAS 12Gb Hot Swap SSD	No	8
3.5-inch hot-swap SSDs - 12 Gb SAS - Read Intensive/Entry/Capacity (<3 DWPD)				
4XB7A17058	B91E	ThinkSystem 3.5" PM1643a 3.84TB Entry SAS 12Gb Hot Swap SSD	No	8
4XB7A17059	BEVK	ThinkSystem 3.5" PM1643a 7.68TB Entry SAS 12Gb Hot Swap SSD	No	8

Table 36. 3.5-inch hot-swap 6 Gb SATA SSDs

Part number	Feature code	Description	SED support	Max Qty
3.5-inch hot-swap SSDs - 6 Gb SATA - Mixed Use/Mainstream (3-5 DWPD)				
4XB7A17137	BA4W	ThinkSystem 3.5" S4620 480GB Mixed Use SATA 6Gb HS SSD	No	8
4XB7A17138	BA4X	ThinkSystem 3.5" S4620 960GB Mixed Use SATA 6Gb HS SSD	No	8
4XB7A17139	BA4Y	ThinkSystem 3.5" S4620 1.92TB Mixed Use SATA 6Gb HS SSD	No	8
4XB7A17140	BK7P	ThinkSystem 3.5" S4620 3.84TB Mixed Use SATA 6Gb HS SSD	No	8
4XB7A17096	B8JL	ThinkSystem 3.5" 5300 240GB Mainstream SATA 6Gb Hot Swap SSD	No	8
4XB7A17097	B8JF	ThinkSystem 3.5" 5300 480GB Mainstream SATA 6Gb Hot Swap SSD	No	8
4XB7A17098	B8J0	ThinkSystem 3.5" 5300 960GB Mainstream SATA 6Gb Hot Swap SSD	No	8
4XB7A17099	B8HR	ThinkSystem 3.5" 5300 1.92TB Mainstream SATA 6Gb Hot Swap SSD	No	8
4XB7A17100	B8HX	ThinkSystem 3.5" 5300 3.84TB Mainstream SATA 6Gb Hot Swap SSD	No	8
4XB7A13639	B49R	ThinkSystem 3.5" S4610 240GB Mixed Use SATA 6Gb HS SSD	No	8
4XB7A13643	B49V	ThinkSystem 3.5" S4610 3.84TB Mixed Use SATA 6Gb HS SSD	No	8
3.5-inch hot-swap SSDs - 6 Gb SATA - Read Intensive/Entry (<3 DWPD)				
4XB7A17118	BA7K	ThinkSystem 3.5" S4520 240GB Read Intensive SATA 6Gb HS SSD	No	8
4XB7A17119	BA7L	ThinkSystem 3.5" S4520 480GB Read Intensive SATA 6Gb HS SSD	No	8
4XB7A17120	BA7M	ThinkSystem 3.5" S4520 960GB Read Intensive SATA 6Gb HS SSD	No	8
4XB7A17121	BA7N	ThinkSystem 3.5" S4520 1.92TB Read Intensive SATA 6Gb HS SSD	No	8
4XB7A17122	BK7F	ThinkSystem 3.5" S4520 3.84TB Read Intensive SATA 6Gb HS SSD	No	8
4XB7A17123	BK7G	ThinkSystem 3.5" S4520 7.68TB Read Intensive SATA 6Gb HS SSD	No	8
4XB7A38276	BCTH	ThinkSystem 3.5" Multi Vendor 240GB Entry SATA 6Gb Hot Swap SSD	No	8
4XB7A38277	BCTJ	ThinkSystem 3.5" Multi Vendor 480GB Entry SATA 6Gb Hot Swap SSD	No	8
4XB7A38278	BCTK	ThinkSystem 3.5" Multi Vendor 960GB Entry SATA 6Gb Hot Swap SSD	No	8
4XB7A38279	BCTL	ThinkSystem 3.5" Multi Vendor 1.92TB Entry SATA 6Gb Hot Swap SSD	No	8
4XB7A38281	BCTM	ThinkSystem 3.5" Multi Vendor 3.84TB Entry SATA 6Gb Hot Swap SSD	No	8
4XB7A17081	B8JB	ThinkSystem 3.5" 5300 240GB Entry SATA 6Gb Hot Swap SSD	No	8
4XB7A17082	B8J9	ThinkSystem 3.5" 5300 480GB Entry SATA 6Gb Hot Swap SSD	No	8
4XB7A17083	B8JC	ThinkSystem 3.5" 5300 960GB Entry SATA 6Gb Hot Swap SSD	No	8
4XB7A17084	B8HZ	ThinkSystem 3.5" 5300 1.92TB Entry SATA 6Gb Hot Swap SSD	No	8
4XB7A17085	B8HQ	ThinkSystem 3.5" 5300 3.84TB Entry SATA 6Gb Hot Swap SSD	No	8
4XB7A17086	B8J3	ThinkSystem 3.5" 5300 7.68TB Entry SATA 6Gb Hot Swap SSD	No	8
4XB7A17178	B6TP	ThinkSystem 3.5" PM883 960GB Entry SATA 6Gb Hot Swap SSD	No	8
4XB7A17179	B6JY	ThinkSystem 3.5" PM883 1.92TB Entry SATA 6Gb Hot Swap SSD	No	8

Table 37. 3.5-inch simple-swap 6 Gb SATA HDDs

Part number	Feature code	Description	SED support	Max Qty
3.5-inch simple-swap HDDs - 6 Gb NL SATA				
7XB7A00055	AUZS	ThinkSystem 1TB 7.2K 6Gbps SATA 3.5" Simple Swap 512n HDD	No	8
7XB7A00056	AUZT	ThinkSystem 2TB 7.2K 6Gbps SATA 3.5" Simple Swap 512n HDD	No	8
7XB7A00057	AUZU	ThinkSystem 4TB 7.2K 6Gbps SATA 3.5" Simple Swap 512n HDD	No	8
7XB7A00058	AXC7	ThinkSystem 6TB 7.2K 6Gbps SATA 3.5" Simple Swap 512e HDD	No	8
7XB7A00059	AXC6	ThinkSystem 8TB 7.2K 6Gbps SATA 3.5" Simple Swap 512e HDD	No	8
7XB7A00060	AXC8	ThinkSystem 3.5" 10TB 7.2K SATA 6Gb Simple Swap 512e HDD	No	8

Table 38. M.2 SATA drives

Part number	Feature code	Description	SED support	Max Qty
M.2 SSDs - 6 Gb SATA - Read Intensive/Entry (<3 DWPD)				
4XB7A82286	BQ1Z	ThinkSystem M.2 5400 PRO 240GB Read Intensive SATA 6Gb NHS SSD	Support	2
4XB7A82287	BQ1Y	ThinkSystem M.2 5400 PRO 480GB Read Intensive SATA 6Gb NHS SSD	Support	2
7N47A00129	AUUL	ThinkSystem M.2 32GB SATA 6Gbps Non-Hot Swap SSD	No	2
7N47A00130	AUUV	ThinkSystem M.2 128GB SATA 6Gbps Non-Hot Swap SSD	No	2
4XB7A17071	B8HS	ThinkSystem M.2 5300 240GB SATA 6Gbps Non-Hot Swap SSD	No	2
4XB7A17073	B919	ThinkSystem M.2 5300 480GB SATA 6Gbps Non-Hot Swap SSD	No	2

Internal backup units

The server supports the internal backup unit options that are listed in the following table.

Table 39. Internal backup units

Part number	Feature code	Description	Maximum supported
Drives			
4T27A80487	B4BM	ThinkSystem Internal Half High LTO Gen8 SAS Tape Drive v2	1
4T27A10727	B4BM	ThinkSystem Internal Half High LTO Gen8 SAS Tape Drive	1
4T27A80486	AVF5	ThinkSystem Internal Half High LTO Gen7 SAS Tape Drive v2	1
7T27A01503	AVF5	ThinkSystem Internal Half High LTO Gen7 SAS Tape Drive	1
4T27A80483	B3YK	ThinkSystem Internal Half High LTO Gen6 SAS Tape Drive v2	1
4T27A10726	B3YK	ThinkSystem Internal Half High LTO Gen6 SAS Tape Drive	1
4T27A80485	AVF6	ThinkSystem Internal RDX USB 3.0 Dock v2	1
7T27A01501	AVF6	ThinkSystem Internal RDX USB 3.0 Dock	1
LTO Media			
7TP7A01604	AVF4	ThinkSystem LTO Gen6 2.5TB Tape	Not applicable
7TP7A01606	AVF7	ThinkSystem LTO Gen7 6TB Tape	Not applicable
4TP7A09619	B4BN	ThinkSystem LTO Gen8 12TB Tape	Not applicable
RDX Media			
7TP7A01601	AVF8	ThinkSystem RDX 500GB Cartridge	Not applicable
7TP7A01602	AVF1	ThinkSystem RDX 1TB Cartridge	Not applicable
7TP7A01603	AVF0	ThinkSystem RDX 2TB Cartridge	Not applicable
7TP7A04318	AXD1	ThinkSystem RDX 4TB Cartridge	Not applicable

The RDX drive is attached via the USB 3.0 port on the system board.

The use of an LTO tape drive requires a SAS HBA, either the 430-8i or 430-16i SAS/SATA 12Gb HBA.

LTO tape drive in a rack conversion kit : The ST550 is supported installed on its side in a rack mount kit, however the use of an LTO tape drive in this configuration is supported but not recommended.

For more information about RDX drive and LTO tape drives, see the Backup Units page on the Lenovo Press site: https://lenovopress.com/servers/options/backup

Optical drives

The ST550 supports the internal optical drive options listed in the following table.

Table 40. Optical drives

Part number	Feature code	Description	Maximum supported
Internal optical drives			
4XA7A80482	BN5H	ThinkSystem Half High SATA DVD-ROM Optical Disk Drive v2	2
7XA7A01204	AVEZ	ThinkSystem Half High SATA DVD-ROM Optical Disk Drive	2
4XA7A80481	BN5J	ThinkSystem Half High SATA DVD-RW Optical Disk Drive v2	2
7XA7A01202	AVEY	ThinkSystem Half High SATA DVD-RW Optical Disk Drive	2

The internal optical drives in the table can be installed in any open 5.25-inch drive bay.

The Half High SATA DVD-ROM drive supports the following media and speeds for reading:

- CD-ROM 48X
- CD-DA (DAE) 48X
- CD-R 48X
- CD-RW 40X
- DVD-ROM (single layer) 16X
- DVD-ROM (dual layer) 12X
- DVD-R (4.7 GB) 16X
- DVD-R DL 8X
- DVD+R 16X
- DVD+R DL 8X
- DVD-RW (4.7 GB) 8X
- DVD+RW 8X

The Half High SATA DVD-RW drive supports the same media and speeds for reading as HH DVD-ROM. In addition, this drive supports the following media and speeds for writing:

- CD-R 24X
- CD-RW 4X
- High Speed CD-RW 10X
- Ultra Speed CD-RW 16X
- DVD-R 8X
- DVD-R DL 8X
- DVD+R 8X
- DVD+R DL 8X
- DVD-RW 6X
- DVD+RW 8X

The server supports the external USB optical drive listed in the following table.

Table 41. External optical drive

Part number	Feature code	Description
7XA7A05926	AVV8	ThinkSystem External USB DVD RW Optical Disk Drive

The drive is based on the Lenovo Slim DVD Burner DB65 drive and supports the following formats: DVD-RAM, DVD-RW, DVD+RW, DVD+R, DVD-R, DVD-ROM, DVD-R DL, CD-RW, CD-R, CD-ROM.

I/O expansion options

The ST550 server supports up to six PCIe 3.0 slots: Four slots (1, 2, 3 and 6) are supported when only one CPU is installed. Slots 4 and 5 require the second processor. The slot lane widths, available power, and supported adapter height and length are as follows:

- Slot 1: PCIe 3.0 x8 (25W); full-height, half-length
- Slot 2: PCIe 3.0 x16 (75W); full-height, half-length
- Slot 3: PCIe 3.0 x16 (75W); full-height, full-length
- Slot 4: PCIe 3.0 x16 (x8 wired) (25W); full-height, full-length (requires second processor)
- Slot 5: PCIe 3.0 x16 (75W); full-height, full-length (requires second processor)
- Slot 6: PCIe 3.0 x8 (x4 wired) (25W); full-height, full-length

Slots 3 and 5 support double-wide GPUs. When double-wide adapters are used slots 4 and 6 cannot be used.

The following figure shows the locations of the PCIe slots.

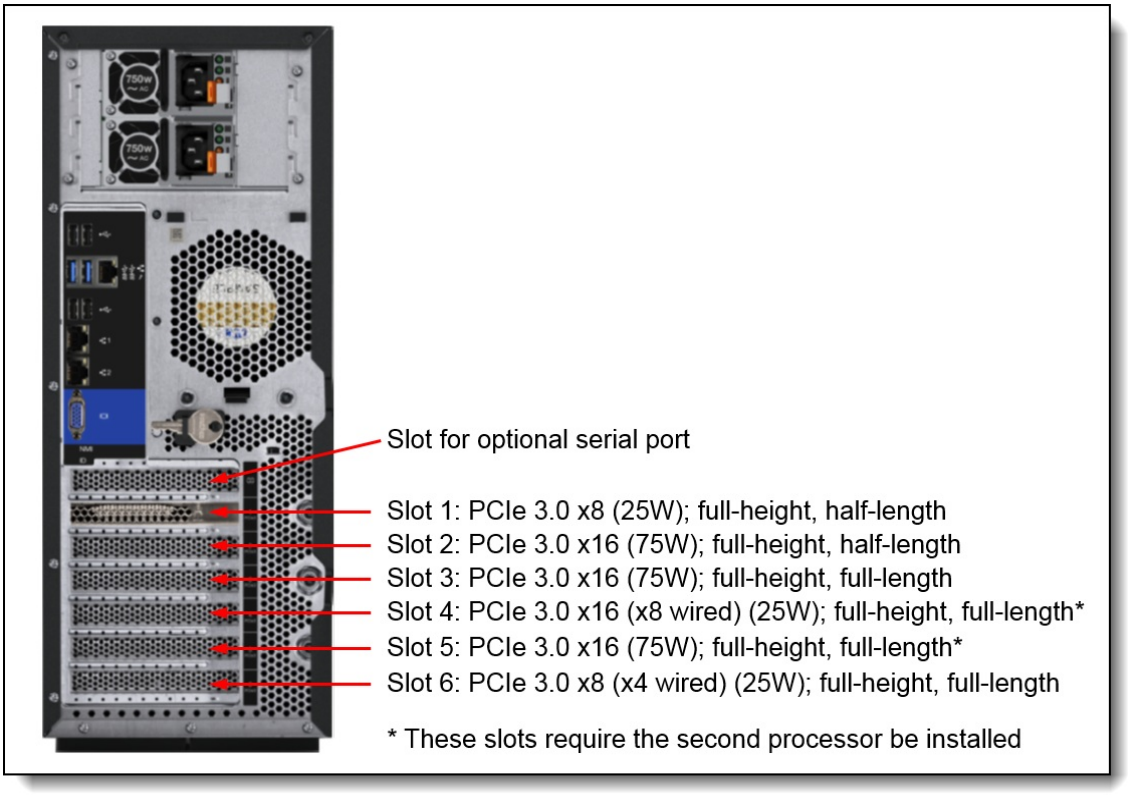

Figure 18. ThinkSystem ST550 PCIe slots

Above the PCIe slots is a space for a serial port bracket which is used for making an external serial port available at the rear of the server. The following table lists the ordering information.

Table 42. ThinkSystem COM Port Upgrade Kit ordering information

Part number	Feature code	Description	Maximum Supported
4Z17A80446	BN5B	ThinkSystem COM Port Upgrade Kit v2	1
7Z17A02577	AUSL	ThinkSystem COM Port Upgrade Kit	1

Network adapters

The ST550 has two onboard Gigabit Ethernet ports, connected to the integrated Intel Ethernet Connection X722 controller.

Note: The onboard Gigabit ports do not support 10 Mbps or 100 Mbps Ethernet connections.

The following table lists other supported network adapters. The maximum supported column indicates which slots each adapter is supported in. For slot locations see the I/O expansion options section.

Table 43. Network adapters

Part number	Feature code	Description	Slots supported	Maximum supported
Gigabit Ethernet				
7ZT7A00482	AUZX	ThinkSystem Broadcom 5720 1GbE RJ45 2-Port PCIe Ethernet Adapter	All slots	6
7ZT7A00484	AUZV	ThinkSystem Broadcom 5719 1GbE RJ45 4-Port PCIe Ethernet Adapter	All slots	6
7ZT7A00534	AUZY	ThinkSystem I350-T2 PCIe 1Gb 2-Port RJ45 Ethernet Adapter By Intel	All slots	6
7ZT7A00535	AUZW	ThinkSystem I350-T4 PCIe 1Gb 4-Port RJ45 Ethernet Adapter By Intel	All slots	6
10 Gb Ethernet - 10GBASE-T				
00MM850	ATRY	Intel X550-T1 Single Port 10GBase-T Adapter	All slots	6
00MM860	ATPX	Intel X550-T2 Dual Port 10GBase-T Adapter	All slots	6
4XC7A79699	BMXB	ThinkSystem Intel X710-T4L 10GBase-T 4-Port PCIe Ethernet Adapter	All slots	6
7ZT7A00496	AUKP	ThinkSystem Broadcom 57416 10GBASE-T 2-Port PCIe Ethernet Adapter	All slots	6
4XC7A08225	B31G	ThinkSystem QLogic QL41134 PCIe 10Gb 4-Port Base-T Ethernet Adapter	All slots	6
10 Gb Ethernet - SFP+				
7ZT7A00537	AUKX	ThinkSystem X710-DA2 PCIe 10Gb 2-Port SFP+ Ethernet Adapter	All slots	6*
00AG580	AT7T	Emulex VFA5.2 2x10 GbE SFP+ Adapter and FCoE/iSCSI SW	All slots	6*
00AG570	AT7S	Emulex VFA5.2 2x10 GbE SFP+ PCIe Adapter	All slots	6*
7ZT7A00493	AUKN	ThinkSystem Emulex OCe14104B-NX PCIe 10Gb 4-Port SFP+ Ethernet Adapter	All slots	6*
25 Gb Ethernet				
01GR250	AUAJ	Mellanox ConnectX-4 Lx 10/25GbE SFP28 2-port PCIe Ethernet Adapter	All slots	6*
4XC7A08238	B5T0	ThinkSystem Broadcom 57414 10/25GbE SFP28 2-port PCIe Ethernet Adapter	All slots	6*
7XC7A05523	B0WY	ThinkSystem Intel XXV710-DA2 10/25GbE SFP28 2-Port PCIe Ethernet Adapter	All slots	6*

* Requires SFP+ transceivers or DAC cables that must be purchased separately.

For more information, including the transceivers and cables that each adapter supports, see the list of Lenovo Press Product Guides in the Ethernet adapters category:
https://lenovopress.com/servers/options/ethernet

SAS adapters for external storage

The following table lists the SAS HBAs and RAID adapters suitable for connectivity to external storage.

Table 44. Supported SAS HBAs and RAID adapters

Part number	Feature code	Description	Slots supported	Maximum supported
12 Gb SAS HBA				
7Y37A01090	AUNR	ThinkSystem 430-8e SAS/SATA 12Gb HBA	All slots	6
4Y37A78837	BNWK	ThinkSystem 440-8e SAS/SATA PCIe Gen4 12Gb HBA	All slots	6
12 Gb RAID Adapter				
7Y37A01087	AUNQ	ThinkSystem RAID 930-8e 4GB Flash PCIe 12Gb Adapter	All slots	4*
4Y37A78836	BNWJ	ThinkSystem RAID 940-8e 4GB Flash PCIe Gen4 12Gb Adapter	All slots	4*

* Limited by the number of supercap mounts in the server

Mixing storage adapter families: The following HBA/RAID adapter combinations are supported:

- X30 external adapters with other X30 adapters (internal or external)
- X40 external adapters with other X40 adapters (internal or external)

The following HBA/RAID adapter combinations are *not* supported:

- X30 adapters (internal or external) with X40 adapters (internal or external)
- X30 adapters (internal or external) with X350 internal adapters
- X40 external adapters with X350 internal adapters

For a comparison of the functions of the supported external storage adapters, see the ThinkSystem RAID Adapter and HBA Reference:
https://lenovopress.lenovo.com/lp1288#st550-support=ST550&internal-or-external-ports=External

Fibre Channel host bus adapters

The following table lists the Fibre Channel HBAs supported by the server.

Table 45. Fibre Channel adapters

Part number	Feature code	Description	Slots supported	Maximum supported
16 Gb Fibre Channel				
01CV840	ATZV	Emulex 16Gb Gen6 FC Dual-port HBA	All slots	6
01CV830	ATZU	Emulex 16Gb Gen6 FC Single-port HBA	All slots	6
01CV760	ATZC	QLogic 16Gb Enhanced Gen5 FC Dual-port HBA	All slots	6
01CV750	ATZB	QLogic 16Gb Enhanced Gen5 FC Single-port HBA	All slots	6

For more information, see the list of Lenovo Press Product Guides in the Host bus adapters category:
https://lenovopress.com/servers/options/hba

Flash Storage adapters

The server currently does not support Flash Storage adapters.

GPU adapters

Withdrawn: All GPUs supported by the ST550 are now withdrawn from marketing

Fans and cooling

The server can operate in environments up to ASHRAE A4 (45°C and 90% humidity). Details and restrictions are described in the Physical and electrical specifications section.

The server supports up to four simple-swap fans, three in the front of the server, just behind the drive bays and one installed at the rear of the server. See the Inside view in the Components and connectors section for locations.

Use of these fans is as follows:

- Single processor systems require 2 fans, installed in the area behind drive bays
- The third fan installed behind the drive bays is required in the following situations:
  - The server has two processors. If the second processor is a field upgrade, then the fan is included with the second processor and does not need to be ordered separately.
  - The server has four 2.5-inch hot-swap drives bays installed in place of the two 5.25-inch media bays converted. If the media bay conversion is a field upgrade (part number 7XH7A05908) and the server only has one processor installed, then order the fan using part number 7XH7A06781.
- Fan 4 (the fan at the rear of the server) can be installed as an N+1 redundant fan if desired. The part number is 7XH7A05900.
- If a GPU is installed, Fan 4 is required and is non-redundant in most configurations. The following table indicates the cooling restrictions that apply when supported GPUs are installed:
  - Whether or not Fan 4 is redundant
  - Limits to ambient temperatures

Table 46. Cooling restrictions with GPUs installed

GPU configuration	NVIDIA P600 selected	NVIDIA P2000 selected	NVIDIA P6000 selected
One GPU installed	Fan 4 is redundant System is limited to ASHRAE A2 (35°C)	Fan 4 is redundant System is limited to ASHRAE A2 (35°C)	Fan 4 is non-redundant System is limited to ASHRAE A2 (35°C)
Two GPUs installed	Fan 4 is redundant System is limited to ASHRAE A2 (35°C)	Fan 4 is non-redundant System is limited to ASHRAE A2 (35°C)	Fan 4 is non-redundant System is limited to 30°C ambient

The table below lists the fan upgrades.

Table 47. Fan upgrades

Part number	Feature code	Description
7XH7A06781	AVS3	ThinkSystem ST550 Front Mid Fan Module for 4x2.5" ODD conversion
7XH7A05900	AVS4	ThinkSystem ST550 Rear Fan Module

Power supplies

The server supports either a single fixed power supply or one or two hot-swap power supplies. When two hot-swap power supplies are installed, they form a redundant pair. The following table lists the supported power supplies.

Table 48. Power supply options

Part number	Feature code	Description	Maximum supported	110V AC	220V AC	240V DC China only
None*	AVS1	450W (230V/115V) Gold AC Fixed (Cabled) Power Supply	1	Yes	Yes	No
7N67A00882	AWFT	550W (230V/115V) Platinum Hot-Swap Power Supply	2	Yes	Yes	Yes
7N67A00883	AWFS	750W (230/115V) Platinum Hot-Swap Power Supply	2	Yes	Yes	Yes
7N67A00884	AWFR	750W (230V) Titanium Hot-Swap Power Supply	2	No	Yes	Yes
4P57A82020	BR1Y	ThinkSystem V1 750W (230Vac) Titanium Hot Swap Power Supply	2	No	Yes	Yes
7N67A00885	AWFQ	1100W (230V/115V) Platinum Hot-Swap Power Supply	2	Yes	Yes	Yes

* Configure-to-order only

550W, 750W and 1100W Platinum power supplies are auto-sensing and support both 110V AC (100-127V 50/60 Hz) and 220V AC (200-240V 50/60 Hz) power. The 750W Titanium power supply only supports 220V AC power. In China only, all four hot-swap power supplies also support 240V DC.

Power supply options do not include a line cord.

For server configurations, the inclusion of a power supply is model dependent. Configure-to-order models can be configured without a power cord if desired.

Power supply configuration rules

The following table shows the power supplies supported with and without GPUs and with the various supported drive bay configurations.

For further power configuration of the server, use the Lenovo Capacity Planner, available at: https://datacentersupport.lenovo.com/us/en/products/solutions-and-software/software/lenovo-capacity-planner/solutions/ht504651

Additional rules:

- 550W, 750W, 1100W power supplies can be used all processors supported by the server
- 450W power supply can only be used with processors that have a TDP of 85W or lower
- 1100W power supply supports GPUs, however limitations on cooling fan redundancy exist for some configurations as described in the Fans and cooling section

Table 49. Power supply support for drive and GPU configurations

Power supply	4x 3.5 SS	8x 3.5 HS	8x 2.5 HS	16x 2.5 HS	8x 2.5 HS AnyBay	8x 3.5 + 4x 2.5 HS	16x 2.5 HS AnyBay	20x 2.5 HS AnyBay	20x 2.5 HS
Without any GPUs									
450W	Y*	Y*	Y*	N	N	N	N	N	N
550W	Y	Y	Y	N	N	N	N	N	N
750W	Y	Y	Y	Y	Y	Y	Y	Y	Y
1100W	Y	Y	Y	Y	Y	Y	Y	Y	Y
With 1 or 2 GPUs**									
450W	N	N	N	N	N	N	N	N	N
550W	N	N	N	N	N	N	N	N	N
750W	N	N	N	N	N	N	N	N	N
1100W	Y	Y	Y	Y	Y	Y	Y	Y	Y

* Only with processors that have a TDP of 85W or lower
** See the Fans and cooling section for cooling restrictions with GPUs

Power cords

Line cords and rack power cables with C13 connectors can be ordered as listed in the following table.

110V customers: If you plan to use the 1100W power supply with a 110V power source, select a power cable that is rated above 10A. Power cables that are rated at 10A or below are not supported with 110V power.

Table 50. Power cords

Part number	Feature code	Description
Rack cables - C13 to C14		
SL67B08593	BPHZ	0.5m, 10A/100-250V, C13 to C14 Jumper Cord
00Y3043	A4VP	1.0m, 10A/100-250V, C13 to IEC 320-C14 Rack Power Cable
4L67A08367	B0N5	1.0m, 13A/100-250V, C13 to C14 Jumper Cord
39Y7937	6201	1.5m, 10A/100-250V, C13 to IEC 320-C14 Rack Power Cable
4L67A08368	B0N6	1.5m, 13A/100-250V, C13 to C14 Jumper Cord
4L67A08365	B0N4	2.0m, 10A/100-250V, C13 to IEC 320-C14 Rack Power Cable
4L67A08369	6570	2.0m, 13A/100-250V, C13 to C14 Jumper Cord
4L67A08366	6311	2.8m, 10A/100-250V, C13 to IEC 320-C14 Rack Power Cable
4L67A08370	6400	2.8m, 13A/100-250V, C13 to C14 Jumper Cord
39Y7932	6263	4.3m, 10A/100-250V, C13 to IEC 320-C14 Rack Power Cable
4L67A08371	6583	4.3m, 13A/100-250V, C13 to C14 Rack Power Cable
Rack cables - C13 to C14 (Y-cable)		
00Y3046	A4VQ	1.345m, 2X C13 to C14 Jumper Cord, Rack Power Cable
00Y3047	A4VR	2.054m, 2X C13 to C14 Jumper Cord, Rack Power Cable
Rack cables - C13 to C20		
39Y7938	6204	2.8m, 10A/100-250V, C13 to IEC 320-C20 Rack Power Cable

Part number	Feature code	Description
Rack cables - C13 to C20 (Y-cable)		
47C2491	A3SW	1.2m, 16A/100-250V, 2 Short C13s to Short C20 Rack Power Cable
47C2492	A3SX	2.5m, 16A/100-250V, 2 Long C13s to Short C20 Rack Power Cable
47C2493	A3SY	2.8m, 16A/100-250V, 2 Short C13s to Long C20 Rack Power Cable
47C2494	A3SZ	4.1m, 16A/100-250V, 2 Long C13s to Long C20 Rack Power Cable
Line cords		
39Y7930	6222	2.8m, 10A/250V, C13 to IRAM 2073 (Argentina) Line Cord
81Y2384	6492	4.3m 10A/220V, C13 to IRAM 2073 (Argentina) Line Cord
39Y7924	6211	2.8m, 10A/250V, C13 to AS/NZ 3112 (Australia/NZ) Line Cord
81Y2383	6574	4.3m, 10A/230V, C13 to AS/NZS 3112 (Aus/NZ) Line Cord
69Y1988	6532	2.8m, 10A/250V, C13 to NBR 14136 (Brazil) Line Cord
81Y2387	6404	4.3m, 10A/250V, C13 - 2P+Gnd (Brazil) Line Cord
39Y7928	6210	2.8m, 220-240V, C13 to GB 2099.1 (China) Line Cord
81Y2378	6580	4.3m, 10A/220V, C13 to GB 2099.1 (China) Line Cord
39Y7918	6213	2.8m, 10A/250V, C13 to DK2-5a (Denmark) Line Cord
81Y2382	6575	4.3m, 10A/230V, C13 to DK2-5a (Denmark) Line Cord
39Y7917	6212	2.8m, 10A/230V, C13 to CEE7-VII (Europe) Line Cord
81Y2376	6572	4.3m, 10A/230V, C13 to CEE7-VII (Europe) Line Cord
39Y7927	6269	2.8m, 10A/250V, C13(2P+Gnd) (India) Line Cord
81Y2386	6567	4.3m, 10A/240V, C13 to IS 6538 (India) Line Cord
39Y7920	6218	2.8m, 10A/250V, C13 to SI 32 (Israel) Line Cord
81Y2381	6579	4.3m, 10A/230V, C13 to SI 32 (Israel) Line Cord
39Y7921	6217	2.8m, 220-240V, C13 to CEI 23-16 (Italy/Chile) Line Cord
81Y2380	6493	4.3m, 10A/230V, C13 to CEI 23-16 (Italy/Chile) Line Cord
46M2593	A1RE	2.8m, 12A/125V, C13 to JIS C-8303 (Japan) Line Cord
4L67A08362	6495	4.3m, 12A/200V, C13 to JIS C-8303 (Japan) Line Cord
39Y7926	6335	4.3m, 12A/100V, C13 to JIS C-8303 (Japan) Line Cord
39Y7922	6214	2.8m, 10A/250V, C13 to SABS 164 (S Africa) Line Cord
81Y2379	6576	4.3m, 10A/230V, C13 to SABS 164 (South Africa) Line Cord
39Y7925	6219	2.8m, 220-240V, C13 to KETI (S Korea) Line Cord
81Y2385	6494	4.3m, 12A/220V, C13 to KSC 8305 (S. Korea) Line Cord
39Y7919	6216	2.8m, 10A/250V, C13 to SEV 1011-S24507 (Swiss) Line Cord
81Y2390	6578	4.3m, 10A/230V, C13 to SEV 1011-S24507 (Sws) Line Cord
23R7158	6386	2.8m, 10A/125V, C13 to CNS 10917-3 (Taiwan) Line Cord
81Y2375	6317	2.8m, 10A/240V, C13 to CNS 10917-3 (Taiwan) Line Cord
81Y2374	6402	2.8m, 13A/125V, C13 to CNS 60799 (Taiwan) Line Cord
4L67A08363	AX8B	4.3m, 10A 125V, C13 to CNS 10917 (Taiwan) Line Cord
81Y2389	6531	4.3m, 10A/250V, C13 to 76 CNS 10917-3 (Taiwan) Line Cord
81Y2388	6530	4.3m, 13A/125V, C13 to CNS 10917 (Taiwan) Line Cord
39Y7923	6215	2.8m, 10A/250V, C13 to BS 1363/A (UK) Line Cord
81Y2377	6577	4.3m, 10A/230V, C13 to BS 1363/A (UK) Line Cord

Part number	Feature code	Description
90Y3016	6313	2.8m, 10A/120V, C13 to NEMA 5-15P (US) Line Cord
46M2592	A1RF	2.8m, 10A/250V, C13 to NEMA 6-15P Line Cord
00WH545	6401	2.8m, 13A/120V, C13 to NEMA 5-15P (US) Line Cord
4L67A08359	6370	4.3m, 10A/125V, C13 to NEMA 5-15P (US) Line Cord
4L67A08361	6373	4.3m, 10A/250V, C13 to NEMA 6-15P (US) Line Cord
4L67A08360	AX8A	4.3m, 13A/120V, C13 to NEMA 5-15P (US) Line Cord

The ST550 also supports the following two-up cables.

Table 51. Power cables for ST550

Part number	Feature code	Description
47C2491	A3SW	1.2m, 10A/100-250V, (2X) C13 to C20 Jumper Cord
47C2492	A3SX	2.5m, 10A/100-250V, (2X) C13 to C20 Jumper Cord
47C2493	A3SY	2.8m, 10A/100-250V, (2X) C13 to C20 Jumper Cord
47C2494	A3SZ	4.1m, 10A/100-250V, (2X) C13 to C20 Jumper Cord

Integrated virtualization

The server supports booting from an operating system or hypervisor installed on an M.2 solid-state drive. See the M.2 drives section for details and the list of available options.

You can download supported VMware vSphere hypervisor images from the following web page and load it on the M.2 drive using the instructions provided:
https://vmware.lenovo.com/content/custom_iso/

Systems management

The server contains an integrated service processor, XClarity Controller (XCC), which provides advanced service-processor control, monitoring, and alerting functions. The XCC is based on the Pilot4 XE401 baseboard management controller (BMC) using a dual-core ARM Cortex A9 service processor.

Local management

The ST550 offers a front operator panel showing key LED status indicators, as shown in the following figure.

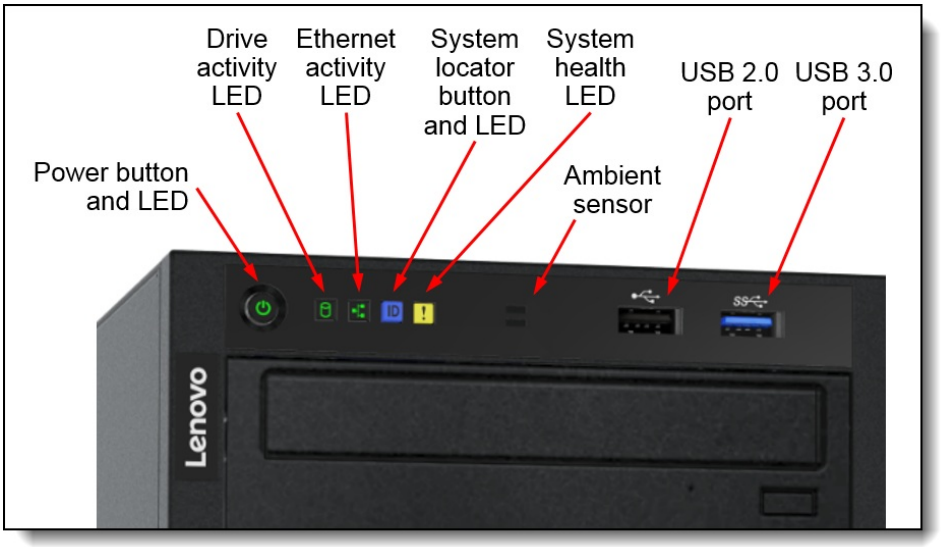

Figure 19. Front operator panel

When you press the ID button on the front panel, the blue system ID LEDs on both the front and rear of the server are lit to help you locate the server among other servers. You also can turn on the system ID LEDs using a remote management program for server presence detection.

System status with XClarity Mobile

The XClarity Mobile app includes a tethering function where you can connect your Android or iOS device to the server via USB to see the status of the server.

The steps to connect the mobile device are as follows:

1. Enable USB Management on the server, by holding down the ID button for 3 seconds (or pressing the dedicated USB management button if one is present)
2. Connect the mobile device via a USB cable to the server's USB port with the management symbol 
3. In iOS or Android settings, enable Personal Hotspot or USB Tethering
4. Launch the Lenovo XClarity Mobile app

Once connected you can see the following information:

- Server status including error logs (read only, no login required)
- Server management functions (XClarity login credentials required)

Remote management

The server offers a dedicated RJ45 port at the rear of the server for remote management via the XClarity Controller management processor. The port supports 10/100/1000 Mbps speeds.

Remote server management is provided through industry-standard interfaces:

- Intelligent Platform Management Interface (IPMI) Version 2.0
- Simple Network Management Protocol (SNMP) Version 3 (no SET commands; no SNMP v1)
- Common Information Model (CIM-XML)
- Representational State Transfer (REST) support
- Redfish support (DMTF compliant)

- Web browser - HTML 5-based browser interface (Java and ActiveX not required) using a responsive design (content optimized for device being used - laptop, tablet, phone) with NLS support

IPMI via the Ethernet port (IPMI over LAN) is supported, however it is disabled by default. For CTO orders you can specify whether you want to the feature enabled or disabled in the factory, using the feature codes listed in the following table.

Table 52. IPMI-over-LAN settings

Part number	Feature code	Description
CTO only	B7XZ	Disable IPMI-over-LAN (default)
CTO only	B7Y0	Enable IPMI-over-LAN

There are two XClarity Controller upgrades available for the server, Advanced and Enterprise.

Lenovo XClarity Controller Advanced adds the following remote control functions:

- Remotely viewing video with graphics resolutions up to 1600x1200 at 75 Hz with up to 23 bits per pixel, regardless of the system state
- Remotely accessing the server using the keyboard and mouse from a remote client
- Capturing blue-screen errors
- International keyboard mapping support
- LDAP-based authentication

Lenovo XClarity Controller Enterprise enables the following additional features:

- Boot Capture
- Remote mounting of CD-ROM (ISO) and diskette (IMG) files as virtual drives
- Virtual console collaboration - Ability for up to 6 remote users to be log into the remote session simultaneously
- Power capping
- License for XClarity Energy Manager

Preconfigured models come with either XClarity Controller Standard, Advanced or Enterprise, depending on the model. See the Models section for details. The following table shows the field upgrades available for preconfigured models.

Table 53. XClarity Controller field upgrades

Part number	Feature code	Description
4L47A09132	AVUT	ThinkSystem XClarity Controller Standard to Advanced Upgrade (for servers that have XCC Standard)
4L47A09133	AVUU	ThinkSystem XClarity Controller Advanced to Enterprise Upgrade (for servers that have XCC Advanced)

For configure-to-order (CTO) models, you can elect to have one of the following XCC functionality by selecting the appropriate XCC feature codes as listed in the following table:

- XCC Standard - select neither feature listed in the table
- XCC Advanced - select feature AVUT
- XCC Enterprise - select feature AUPW

Table 54. XClarity Controller Upgrades for configure-to-order

Feature code	Description
AVUT	ThinkSystem XClarity Controller Standard to Advanced Upgrade
AUPW	ThinkSystem XClarity Controller Standard to Enterprise Upgrade

Lenovo XClarity Provisioning Manager

Lenovo XClarity Provisioning Manager (LXPM) is a UEFI-based application embedded in ThinkSystem servers and accessible via the F1 key during system boot.

LXPM provides the following functions:

- Graphical UEFI Setup
- System inventory information and VPD update
- System firmware updates (UEFI and XCC)
- RAID setup wizard
- OS installation wizard (including unattended OS installation)
- Diagnostics functions

Lenovo XClarity Administrator

Lenovo XClarity Administrator is a centralized resource management solution designed to reduce complexity, speed response, and enhance the availability of Lenovo systems and solutions. It provides agent-free hardware management for ThinkSystem servers, in addition to ThinkServer, System x, and Flex System servers. The administration dashboard is based on HTML 5 and allows fast location of resources so tasks can be run quickly.

Because Lenovo XClarity Administrator does not require any agent software to be installed on the managed endpoints, there are no CPU cycles spent on agent execution, and no memory is used, which means that up to 1GB of RAM and 1 - 2% CPU usage is saved, compared to a typical managed system where an agent is required.

Lenovo XClarity Administrator is an optional software component for the ST550. The software can be downloaded and used at no charge to discover and monitor the ST550 and to manage firmware upgrades.

If software support is required for Lenovo XClarity Administrator, or premium features such as configuration management and operating system deployment are required, Lenovo XClarity Pro software subscription should be ordered. Lenovo XClarity Pro is licensed on a per managed system basis, that is, each managed Lenovo system requires a license.

The following table lists the Lenovo XClarity software license options.

Table 55. Lenovo XClarity Pro ordering information

Part number	Feature code	Description
00MT201	1339	Lenovo XClarity Pro, per Managed Endpoint w/1 Yr SW S&S
00MT202	1340	Lenovo XClarity Pro, per Managed Endpoint w/3 Yr SW S&S
00MT203	1341	Lenovo XClarity Pro, per Managed Endpoint w/5 Yr SW S&S
7S0X000HWW	SAYV	Lenovo XClarity Pro, per Managed Endpoint w/6 Yr SW S&S
7S0X000JWW	SAYW	Lenovo XClarity Pro, per Managed Endpoint w/7 Yr SW S&S

Lenovo XClarity Administrator offers the following standard features that are available at no charge:

- Auto-discovery and monitoring of Lenovo systems
- Firmware updates and compliance enforcement
- External alerts and notifications via SNMP traps, syslog remote logging, and e-mail
- Secure connections to managed endpoints
- NIST 800-131A or FIPS 140-2 compliant cryptographic standards between the management solution and managed endpoints
- Integration into existing higher-level management systems such as cloud automation and orchestration tools through REST APIs, providing extensive external visibility and control over hardware resources
- An intuitive, easy-to-use GUI
- Scripting with Windows PowerShell, providing command-line visibility and control over hardware resources

Lenovo XClarity Administrator offers the following premium features that require an optional Pro license:

- Pattern-based configuration management that allows to define configurations once and apply repeatedly without errors when deploying new servers or redeploying existing servers without disrupting the fabric
- Bare-metal deployment of operating systems and hypervisors to streamline infrastructure provisioning

For more information, refer to the Lenovo XClarity Administrator Product Guide: http://lenovopress.com/tips1200

Lenovo XClarity Integrators

Lenovo also offers software plug-in modules, Lenovo XClarity Integrators, to manage physical infrastructure from leading external virtualization management software tools including those from Microsoft and VMware.

These integrators are offered at no charge, however if software support is required, a Lenovo XClarity Pro software subscription license should be ordered.

Lenovo XClarity Integrators offer the following additional features:

- Ability to discover, manage, and monitor Lenovo server hardware from VMware vCenter or Microsoft System Center
- Deployment of firmware updates and configuration patterns to Lenovo x86 rack servers and Flex System from the virtualization management tool
- Non-disruptive server maintenance in clustered environments that reduces workload downtime by dynamically migrating workloads from affected hosts during rolling server updates or reboots
- Greater service level uptime and assurance in clustered environments during unplanned hardware events by dynamically triggering workload migration from impacted hosts when impending hardware failures are predicted

For more information about all the available Lenovo XClarity Integrators, see the Lenovo XClarity Administrator Product Guide: https://lenovopress.com/tips1200-lenovo-xclarity-administrator

Lenovo XClarity Essentials

Lenovo offers the following XClarity Essentials software tools that can help you set up, use, and maintain the server at no additional cost:

- Lenovo Essentials OneCLI

  OneCLI is a collection of server management tools that uses a command line interface program to manage firmware, hardware, and operating systems. It provides functions to collect full system health information (including health status), configure system settings, and update system firmware and drivers.

- Lenovo Essentials UpdateXpress

  The UpdateXpress tool is a standalone GUI application for firmware and device driver updates that enables you to maintain your server firmware and device drivers up-to-date and help you avoid unnecessary server outages. The tool acquires and deploys individual updates and UpdateXpress System Packs (UXSPs) which are integration-tested bundles.

- Lenovo Essentials Bootable Media Creator

  The Bootable Media Creator (BOMC) tool is used to create bootable media for offline firmware update.

For more information and downloads, visit the Lenovo XClarity Essentials web page:
http://support.lenovo.com/us/en/documents/LNVO-center

Lenovo XClarity Energy Manager

Lenovo XClarity Energy Manager (LXEM) is a power and temperature management solution for data centers. It is an agent-free, web-based console that enables you to monitor and manage power consumption and temperature in your data center through the management console. It enables server density and data center capacity to be increased through the use of power capping.

LXEM is a licensed product. A single-node LXEM license is included with the XClarity Controller Enterprise upgrade as described in the Remote Management section. If your server does not have the XCC Enterprise upgrade, Energy Manager licenses can be ordered as shown in the following table.

Table 56. Lenovo XClarity Energy Manager

Part number	Description
4L40E51621	Lenovo XClarity Energy Manager Node License (1 license needed per server)

For more information about XClarity Energy Manager, see the following resources:

- Lenovo Support page:
  https://datacentersupport.lenovo.com/us/en/solutions/lnvo-lxem
- Lenovo Information Center:
  https://sysmgt.lenovofiles.com/help/topic/LXEM/lxem_overview.html?cp=4

Security

The server offers the following security features:

- Electronic security measures:
  - Administrator and power-on passwords
  - Trusted Platform Module (TPM) supporting both TPM 1.2 and TPM 2.0
  - Optional Trusted Cryptographic Module (TCM), available only in China
  - Self-encrypting drives with support for IBM Security Key Lifecycle Manager

- Mechanical security measures
  - Lockable side cover to help prevent access to internal components
  - Slot at the rear of the server for a Kensington Cable Lock
  - Optional chassis intrusion switch
  - Optional lockable front security door

The server is NIST SP 800-147B compliant.

The TCM module and Nationz TPM module are available only for China customers and are installed in a dedicated socket on the system board, as shown in Figure 4.

The optional lockable front door includes a key that enables you to secure access to the drive bays and system controls, thereby reducing the possibility of unauthorized or accidental access to the server.

The following table lists the security options for the server.

Table 57. Security features

Part number	Feature code	Description
7XH7A05903	AVRR	ThinkSystem ST550 Security Door
None*	AVKE	ThinkSystem Trusted Cryptographic Module (China customers only)
None*	B22N	ThinkSystem Nationz Trusted Platform Module v2.0 (China customers only)
None*	AVSD	ThinkSystem ST550 Intrusion Switch and Cable

* Available via configure-to-order or in preconfigured models only

For SED drives and IBM Security Key Lifecycle Manager support see the SED encryption key management with ISKLM section.

Intel Transparent Supply Chain

Add a layer of protection in your data center and have peace of mind that the server hardware you bring into it is safe authentic and with documented, testable, and provable origin.

Lenovo has one of the world's best supply chains, as ranked by Gartner Group, backed by extensive and mature supply chain security programs that exceed industry norms and US Government standards. Now we are the first Tier 1 manufacturer to offer Intel® Transparent Supply Chain in partnership with Intel, offering you an unprecedented degree of supply chain transparency and assurance.

To enable Intel Transparent Supply Chain for the Intel-based servers in your order, add the following feature code in the DCSC configurator, under the Security tab.

Table 58. Intel Transparent Supply Chain ordering information

Feature code	Description
BB0P	Intel Transparent Supply Chain

For more information on this offering, see the paper *Introduction to Intel Transparent Supply Chain on Lenovo ThinkSystem Servers*, available from https://lenovopress.com/lp1434-introduction-to-intel-transparent-supply-chain-on-thinksystem-servers.

Keyboards and Mice

The following table lists the supported full-sized USB keyboards and mice available for Lenovo ThinkSystem servers.

The keyboards have the following features:

- Full-sized 104-key keyboard with 3 special Windows keys
- 3 LEDs for caps lock, scroll lock and num lock
- Wired USB connection with 1.8m cable
- Adjustable feet at the rear of the keyboard

Tip: For keyboards that fit in the rack-mounted console kit, see the KVM console options section, or the ThinkSystem 18.5-inch LCD Console product guide

Table 59. Lenovo Preferred Pro USB Full-sized keyboards - ThinkSystem

Part number	Feature code	Description
Mice		
7M57A04698	B0LN	ThinkSystem Optical Wheel Mouse - USB
Keyboards		
7ZB7A05521	AXTM	ThinkSystem Pref. Pro II USB Keyboard - Arabic
7ZB7A05520	AXTN	ThinkSystem Pref. Pro II USB Keyboard - Arabic/French
7ZB7A05519	AXTP	ThinkSystem Pref. Pro II USB Keyboard - Belgium/French
7ZB7A05518	AXTQ	ThinkSystem Pref. Pro II USB Keyboard - Belgium/UK
7ZB7A05517	AXTR	ThinkSystem Pref. Pro II USB Keyboard - Brazil/Portuguese
7ZB7A05515	AXTS	ThinkSystem Pref. Pro II USB Keyboard - Bulgarian
7ZB7A05511	AXTU	ThinkSystem Pref. Pro II USB Keyboard - Czech
7ZB7A05509	AXTV	ThinkSystem Pref. Pro II USB Keyboard - Danish
7ZB7A05508	AXTW	ThinkSystem Pref. Pro II USB Keyboard - Dutch
7ZB7A05506	AXTX	ThinkSystem Pref. Pro II USB Keyboard - French
7ZB7A05496	AXTZ	ThinkSystem Pref. Pro II USB Keyboard - French Canadian French
7ZB7A05504	AXTY	ThinkSystem Pref. Pro II USB Keyboard - French Canadian Multilingual
7ZB7A05495	AXU0	ThinkSystem Pref. Pro II USB Keyboard - German
7ZB7A05494	AXU1	ThinkSystem Pref. Pro II USB Keyboard - Greek
7ZB7A05493	AXU2	ThinkSystem Pref. Pro II USB Keyboard - Hebrew
7ZB7A05492	AXU3	ThinkSystem Pref. Pro II USB Keyboard - Hungarian
7ZB7A05491	AXU4	ThinkSystem Pref. Pro II USB Keyboard - Iceland
7ZB7A05490	AXU5	ThinkSystem Pref. Pro II USB Keyboard - Italy
7ZB7A05489	AXU6	ThinkSystem Pref. Pro II USB Keyboard -Japanese
7ZB7A05488	AXU7	ThinkSystem Pref. Pro II USB Keyboard - Korean
7ZB7A05487	AXU8	ThinkSystem Pref. Pro II USB Keyboard - LA Spanish
7ZB7A05486	AXU9	ThinkSystem Pref. Pro II USB Keyboard - Norwegian
7ZB7A05485	AXUA	ThinkSystem Pref. Pro II USB Keyboard - Polish
7ZB7A05484	AXUB	ThinkSystem Pref. Pro II USB Keyboard- Portugese
7ZB7A05483	AXUC	ThinkSystem Pref. Pro II USB Keyboard - Romanian
7ZB7A05482	AXUD	ThinkSystem Pref. Pro II USB Keyboard - Russian/Cy

Part number	Feature code	Description
7ZB7A05481	AXUE	ThinkSystem Pref. Pro II USB Keyboard - Serbian/Cyrilic
7ZB7A05480	AXUF	ThinkSystem Pref. Pro II USB Keyboard - Slovak
7ZB7A05471	AXUQ	ThinkSystem Pref. Pro II USB Keyboard - Slovenian
7ZB7A05479	AXUG	ThinkSystem Pref. Pro II USB Keyboard - Spanish
7ZB7A05478	AXUH	ThinkSystem Pref. Pro II USB Keyboard- Swedish/Finn
7ZB7A05477	AXUJ	ThinkSystem Pref. Pro II USB Keyboard - Swiss, F/G
7ZB7A05476	AXUK	ThinkSystem Pref. Pro II USB Keyboard - Thailand
7ZB7A05513	AXTT	ThinkSystem Pref. Pro II USB Keyboard - Trad Chinese/US
7ZB7A05474	AXUM	ThinkSystem Pref. Pro II USB Keyboard - Turkish 179
7ZB7A05475	AXUL	ThinkSystem Pref. Pro II USB Keyboard - Turkish 440
7ZB7A05473	AXUN	ThinkSystem Pref. Pro II USB Keyboard - UK English
7ZB7A05522	AXTL	ThinkSystem Pref. Pro II USB Keyboard - US English
7ZB7A05472	AXUP	ThinkSystem Pref. Pro II USB Keyboard - US Euro

Rack installation

The server can be installed in the rack with the Tower to Rack Conversion Kit. The resulting server is a 4U rack-mountable server, as shown in the following figure.



Figure 20. ThinkSystem ST550 with Rack Conversion Kit installed

The part numbers are summarized in the following table.

Table 60. Rack installation options

Part number	Feature code	Description and contents
7XH7A05901	AVRV	Tower to Rack Conversion Kit • Rack conversion kit • Slide rail
7XH7A05902	B1BK	4U CMA for Tower to Rack Kit • Cable management arm only (requires 7XH7A05901)
CTO only	AVRX	Tower to Rack Conversion Kit Bundle CMA Kit • Rack conversion kit • Slide rail • Cable management arm

The rail kit has the specifications listed in the following table.

Table 61. Rail kit specifications

Feature	ThinkSystem ST550 4U Tower to Rack Conversion Kit
Part number	7XH7A05901
Rail type	Full-out slide rail (ball bearing)
Toolless installation	Yes
Cable Management Arm (CMA) support	Optional (7XH7A05902) or included in feature code AVRX
In-rack server maintenance	Yes
1U PDU support	Yes
0U PDU support	Limited*
Rack type	Lenovo and IBM 4-post, IEC standard-compliant
Mounting holes	Square or round
Mounting flange thickness	2 mm - 3.3 mm (0.08 - 0.13 in.)
Distance between front and rear mounting flanges	537 mm - 810 mm (21.1 - 31.9 in.)
Rail length***	792 mm (31.2 in.)

* For 0U PDU support, the rack must be at least 1100 mm (43.31 in.) deep without a CMA, or at least 1200 mm (47.24 in.) deep if a CMA is used.
*** Measured when mounted on the rack, from the front surface of the front mounting flange to the rearmost point of the rail.

Supported rack cabinets are listed in the Rack cabinets section.

Operating system support

The ST550 with second-generation Intel Xeon Scalable processors supports the following operating systems:

- Microsoft Windows Server 2016
- Microsoft Windows Server 2019
- Microsoft Windows Server 2022
- Red Hat Enterprise Linux 7.6
- Red Hat Enterprise Linux 7.7
- Red Hat Enterprise Linux 7.8

- Red Hat Enterprise Linux 7.9
- Red Hat Enterprise Linux 8.0
- Red Hat Enterprise Linux 8.1
- Red Hat Enterprise Linux 8.2
- Red Hat Enterprise Linux 8.3
- Red Hat Enterprise Linux 8.4
- Red Hat Enterprise Linux 8.5
- Red Hat Enterprise Linux 8.6
- Red Hat Enterprise Linux 8.7
- Red Hat Enterprise Linux 8.8
- Red Hat Enterprise Linux 9.0
- Red Hat Enterprise Linux 9.1
- Red Hat Enterprise Linux 9.2
- SUSE Linux Enterprise Server 12 SP4
- SUSE Linux Enterprise Server 12 SP5
- SUSE Linux Enterprise Server 12 Xen SP4
- SUSE Linux Enterprise Server 12 Xen SP5
- SUSE Linux Enterprise Server 15
- SUSE Linux Enterprise Server 15 SP1
- SUSE Linux Enterprise Server 15 SP2
- SUSE Linux Enterprise Server 15 SP3
- SUSE Linux Enterprise Server 15 SP4
- SUSE Linux Enterprise Server 15 SP5
- SUSE Linux Enterprise Server 15 Xen
- SUSE Linux Enterprise Server 15 Xen SP1
- SUSE Linux Enterprise Server 15 Xen SP2
- SUSE Linux Enterprise Server 15 Xen SP3
- SUSE Linux Enterprise Server 15 Xen SP4
- SUSE Linux Enterprise Server 15 Xen SP5
- Ubuntu 22.04 LTS 64-bit
- VMware ESXi 6.5 U2
- VMware ESXi 6.5 U3
- VMware ESXi 6.7 U1
- VMware ESXi 6.7 U2
- VMware ESXi 6.7 U3
- VMware ESXi 7.0
- VMware ESXi 7.0 U1
- VMware ESXi 7.0 U2
- VMware ESXi 7.0 U3
- VMware ESXi 8.0
- VMware ESXi 8.0 U1
- VMware ESXi 8.0 U2

The ST550 server with 1st Gen Intel Xeon SP processors supports the following operating systems:

- Microsoft Windows Server 2012 R2
- Microsoft Windows Server 2016
- Microsoft Windows Server 2019
- Microsoft Windows Server 2022
- Microsoft Windows Server, version 1709
- Red Hat Enterprise Linux 6.10 x64
- Red Hat Enterprise Linux 6.9 x64
- Red Hat Enterprise Linux 7.3
- Red Hat Enterprise Linux 7.4
- Red Hat Enterprise Linux 7.5
- Red Hat Enterprise Linux 7.6
- Red Hat Enterprise Linux 7.7

- Red Hat Enterprise Linux 7.8
- Red Hat Enterprise Linux 7.9
- Red Hat Enterprise Linux 8.0
- Red Hat Enterprise Linux 8.1
- Red Hat Enterprise Linux 8.2
- Red Hat Enterprise Linux 8.3
- Red Hat Enterprise Linux 8.4
- Red Hat Enterprise Linux 8.5
- Red Hat Enterprise Linux 8.6
- Red Hat Enterprise Linux 8.7
- Red Hat Enterprise Linux 8.8
- Red Hat Enterprise Linux 9.0
- Red Hat Enterprise Linux 9.1
- Red Hat Enterprise Linux 9.2
- SUSE Linux Enterprise Server 11 Xen x64 SP4
- SUSE Linux Enterprise Server 11 x64 SP4
- SUSE Linux Enterprise Server 12 SP2
- SUSE Linux Enterprise Server 12 SP3
- SUSE Linux Enterprise Server 12 SP4
- SUSE Linux Enterprise Server 12 SP5
- SUSE Linux Enterprise Server 12 Xen SP2
- SUSE Linux Enterprise Server 12 Xen SP3
- SUSE Linux Enterprise Server 12 Xen SP4
- SUSE Linux Enterprise Server 12 Xen SP5
- SUSE Linux Enterprise Server 15
- SUSE Linux Enterprise Server 15 SP1
- SUSE Linux Enterprise Server 15 SP2
- SUSE Linux Enterprise Server 15 SP3
- SUSE Linux Enterprise Server 15 SP4
- SUSE Linux Enterprise Server 15 SP5
- SUSE Linux Enterprise Server 15 Xen
- SUSE Linux Enterprise Server 15 Xen SP1
- SUSE Linux Enterprise Server 15 Xen SP2
- SUSE Linux Enterprise Server 15 Xen SP3
- SUSE Linux Enterprise Server 15 Xen SP4
- SUSE Linux Enterprise Server 15 Xen SP5
- Ubuntu 22.04 LTS 64-bit
- VMware ESXi 6.0 U3
- VMware ESXi 6.5
- VMware ESXi 6.5 U1
- VMware ESXi 6.5 U2
- VMware ESXi 6.5 U3
- VMware ESXi 6.7
- VMware ESXi 6.7 U1
- VMware ESXi 6.7 U2
- VMware ESXi 6.7 U3
- VMware ESXi 7.0
- VMware ESXi 7.0 U1
- VMware ESXi 7.0 U2
- VMware ESXi 7.0 U3
- VMware ESXi 8.0
- VMware ESXi 8.0 U1
- VMware ESXi 8.0 U2

For a complete list of supported, certified and tested operating systems, plus additional details and links to relevant web sites, see the Operating System Interoperability Guide:
https://lenovopress.com/osig#servers=st550-7x09-7x10-sp-gen-2

Virtualization support: The onboard SATA ports of the server can be used with virtualization hypervisors, including VMware ESXi, Linux KVM, Xen, and Microsoft Hyper-V, however support is limited to AHCI (non-RAID) mode. RSTe mode is not supported with virtualization hypervisors.

For configure-to-order configurations, the server can be preloaded with VMware ESXi installed on M.2 cards. Ordering information is listed in the following table.

Table 62. VMware ESXi preload

Part number	Feature code	Description
CTO only	B3VW	VMware ESXi 6.5 U2 (Factory Installed)
CTO only	B6U0	VMware ESXi 6.5 U3 (factory installed)
CTO only	B4XA	VMware ESXi 6.7 U1 (Factory Installed)
CTO only	B6U1	VMware ESXi 6.7 U2 (factory installed)
CTO only	B88T	VMware ESXi 6.7 U3 (factory installed)
CTO only	BBZG	VMware ESXi 7.0 (Factory Installed)
CTO only	BE5E	VMware ESXi 7.0 U1 (Factory Installed)
CTO only	BHSR	VMware ESXi 7.0 U2 (Factory Installed)
CTO only	BMEY	VMware ESXi 7.0 U3 (Factory Installed)
CTO only	BMT5	VMware ESXi 8.0 (Factory Installed)
CTO only	BQ8S	VMware ESXi 8.0 U1 (Factory Installed)

Physical and electrical specifications

The ST550 has the following overall physical dimensions, including tower feet, excluding components that extend outside the standard chassis, such as power supply handles:

- Width: 176 mm (6.9 inches)
- Height: 438 mm (17.2 inches)
- Depth: 660 mm (26 inches)

The following table lists the detailed dimensions. See the figure below for the definition of each dimension.

Table 63. Detailed dimensions

Dimension	Description
176 mm	X_a = Width, using widest features (not including feet)
272 mm	X_b = Width, with chassis feet extended
438 mm	Y_a = Height, from bottom of feet to top of chassis body
425 mm	Y_b = Height, from bottom of chassis body to top of chassis body
623 mm	Z_a = Depth, from front door to most rearward I/O port surface
660 mm	Z_b = Depth, from front door to deepest feature of the chassis body feature
667 mm	Z_c = Depth, from front door to deepest feature such as power supply handle
17 mm	Z_e = Depth, front door to front plate of chassis body

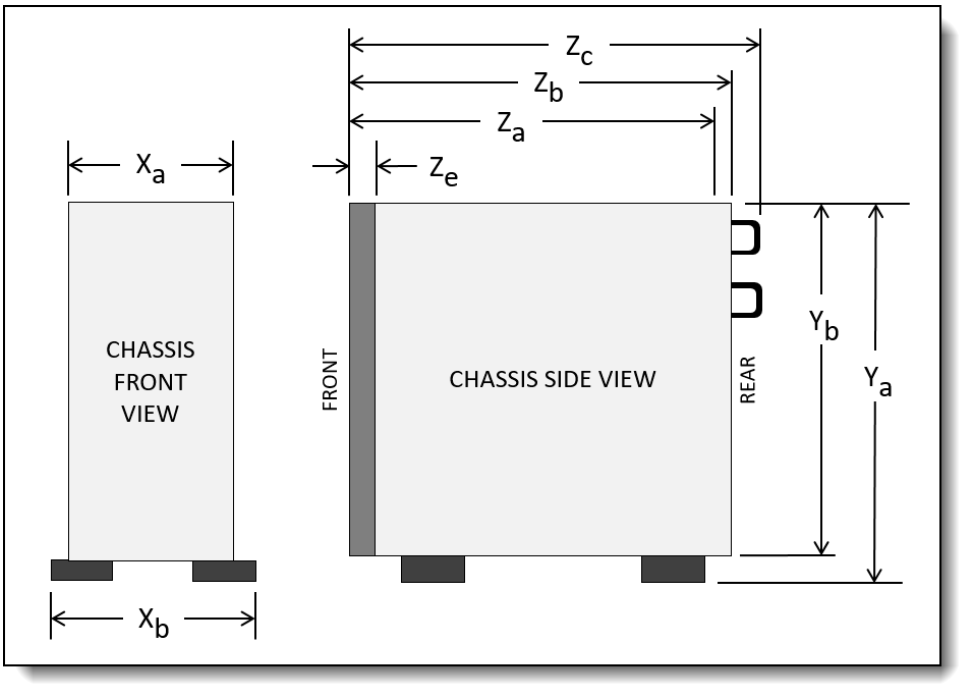

Figure 21. Server dimension

A note about the stabilizer feet: The ST550 includes stabilizer foot stands that are used when the server is in the tower configuration. The stabilizer feet can be installed in a retracted position or in an open position. For safety reasons, it is recommended the feet be used in the open position to help prevent the server from tipping over, however if needed, the feet can be positioned so that they do not extend beyond the width of the server enclosure. When the ST550 is converted to a rack configuration, the feet are removed.

The shipping dimensions (cardboard packaging) of the ST550 are as follows:

- Width: 574 mm (22.6 inches)
- Height: 372 mm (14.6 inches)
- Depth: 982 mm (38.7 inches)

Weight:

- Fully configured: 36 kg (79.36 lb)

Electrical requirements are as follows:

- Models with 550 W AC power supplies:
  - 100-127 (nominal) V ac; 50 Hz or 60 Hz; 6.2 A
  - 200 - 240 (nominal) V ac; 50 Hz or 60 Hz; 3.0 A
  - Input kilovolt-amperes (kVA) (approximately):
    - Minimum configuration: 0.16 kVA
    - Maximum configuration: 0.722 kVA
- Models with 750 W Platinum AC power supplies:
  - 100 - 127 (nominal) V ac; 50 Hz or 60 Hz; 8.4 A
  - 200 - 240 (nominal) V ac; 50 Hz or 60 Hz; 4.1 A
  - Input kilovolt-amperes (kVA) (approximately):
    - Minimum configuration: 0.15 kVA
    - Maximum configuration: 0.954 kVA

- Models with 750 W Titanium AC power supplies:
  - 200 - 240 (nominal) V ac; 50 Hz or 60 Hz; 4.1 A
  - Input kilovolt-amperes (kVA) (approximately):
    - Minimum configuration: 0.15 kVA
    - Maximum configuration: 0.906 kVA
- Models with 1100 W Platinum AC power supplies:
  - 100 - 127 (nominal) V ac; 50 Hz or 60 Hz; 12.0 A
  - 200 - 240 (nominal) V ac; 50 Hz or 60 Hz; 6.0 A
  - Input kilovolt-amperes (kVA) (approximately):
    - Minimum configuration: 0.12 kVA
    - Maximum configuration: 1.406 kVA

For China customers using 240V DC input power:

- Models with 550 W 240V DC power supplies:
  - 200 - 240 (nominal) V dc; 2.5 A
  - Input kilovolt-amperes (kVA) (approximately):
    - Minimum configuration: 0.16 kVA
    - Maximum configuration: 0.70 kVA
- Models with 750 W Platinum 240V DC power supplies:
  - 200 - 240 (nominal) V dc; 3.5 A
  - Input kilovolt-amperes (kVA) (approximately):
    - Minimum configuration: 0.15 kVA
    - Maximum configuration: 0.958 kVA
- Models with 750 W Titanium 240V DC power supplies:
  - 200 - 240 (nominal) V dc; 3.5 A
  - Input kilovolt-amperes (kVA) (approximately):
    - Minimum configuration: 0.15 kVA
    - Maximum configuration: 0.948 kVA
- Models with 1100 W Platinum 240V DC power supplies:
  - 200 - 240 (nominal) V dc; 5.1 A
  - Input kilovolt-amperes (kVA) (approximately):
    - Minimum configuration: 0.12 kVA
    - Maximum configuration: 1.408 kVA

Operating environment

The ThinkSystem ST550 server complies with ASHRAE Class A2 specifications, and depending on the hardware configuration, also complies with ASHRAE Class A3 and Class A4 specifications. System performance may be impacted when operating temperature is outside ASHRAE A2 specification.

The following restrictions apply with ASHRAE A4 and A3 support:

- No support for processors with TDP rating of 125 W or higher
- Two power supplies must be installed; fixed (cabled) power supply not supported
- The rear fan must be installed
- No support for NVMe drives
- No support for GPUs
- If the media bay conversion kit is installed (adding 4x 2.5-inch drive bays), those drive bays cannot support SAS drives (HDD or SSD) that are 2TB or larger. SATA drives are fully supported.

In addition, CPU core speed may be reduced depending on the processor selected.

Temperature and humidity

The server is supported operating in the following environments:

- ASHRAE A2:

    - Temperature: 10°C to 35°C
    - Humidity: 8% to 80%
    - Altitude 0-3000 m (10,000 ft), derated 1°C per 300 m above 950 m
- ASHRAE A3:
    - Temperature: 5°C to 40°C
    - Humidity: 8% to 85%
    - Altitude 0-3000 m (10,000 ft), derated 1°C per 175 m above 950 m
- ASHRAE A4:
    - Temperature: 5°C to 45°C
    - Humidity: 8% to 90%
    - Altitude 0-3000 m (10,000 ft), derated 1°C per 125 m above 950 m

Non-operating environment support:

- Without packaging:
    - Temperature: -10 °C to 60 °C
    - Humidity: 8 to 90%
- Storage with packaging:
    - Temperature: -40 °C to 70 °C
    - Humidity: 8 to 90%

Thermal (heat) output:

- Maximum configuration: 4074 Btu/hr (1194 watts)

Acoustical noise emissions

The server has the following acoustic noise emissions declaration:

- Sound power levels (bels):
    - Base configuration: 4.0 bels (idle), 4.1 bels (operating)
    - Maximum configuration: 5.3 bels (idle), 5.3 bels (operating)
- Sound pressure levels (dBA):
    - Base configuration: 33 dBA (idle), 33 dBA (operating)
    - Maximum configuration: 43 dBA (idle), 43 dBA (operating)

Shock and vibration

The server has the following vibration and shock limits:

- Vibration:
    - Operating: 0.21 G rms at 5 Hz to 500 Hz for 15 minutes across 3 axes
    - Non-operating: 1.04 G rms at 2 Hz to 200 Hz for 15 minutes across 6 surfaces
- Shock:
    - Operating: 15 G for 3 milliseconds in each direction (positive and negative X, Y, and Z axes)
    - Non-operating:
        - 12 kg - 22 kg: 50 G for 152 in./sec velocity change across 6 surfaces
        - 23 kg - 31 kg: 35 G for 152 in./sec velocity change across 6 surfaces

Particulate contamination

Airborne particulates (including metal flakes or particles) and reactive gases acting alone or in combination with other environmental factors such as humidity or temperature might damage the system that might cause the system to malfunction or stop working altogether.

The following specifications indicate the limits of particulates that the system can tolerate:

- Reactive gases:
  - The reactivity rate of copper coupons shall be less than 200 Angstroms per month (Å/month)
  - The reactivity rate of silver coupons shall be less than 200 Å/month
- Airborne particulates:
  - The room air should be continuously filtered with MERV 8 filters.
  - Air entering a data center should be filtered with MERV 11 or preferably MERV 13 filters.
  - The deliquescent relative humidity of the particulate contamination should be more than 60% RH
  - Data centers must be free of zinc whiskers

For additional information, see the Specifications section of the Setup Guide for the server, available from the Lenovo Documents site, https://pubs.lenovo.com/

Warranty and Support

The ST550 has a 1-year or 3-year warranty, based on the machine type of the system:

- 7X09: 1 year warranty
- 7X10: 3 year warranty

The standard warranty terms are customer-replaceable unit (CRU) and onsite (for field-replaceable units FRUs only) with standard call center support during normal business hours and 9x5 Next Business Day Parts Delivered.

Lenovo's additional support services provide a sophisticated, unified support structure for your data center, with an experience consistently ranked number one in customer satisfaction worldwide. Available offerings include:

- **Premier Support**

  Premier Support provides a Lenovo-owned customer experience and delivers direct access to technicians skilled in hardware, software, and advanced troubleshooting, in addition to the following:

  - Direct technician-to-technician access through a dedicated phone line
  - 24x7x365 remote support
  - Single point of contact service
  - End to end case management
  - Third-party collaborative software support
  - Online case tools and live chat support
  - On-demand remote system analysis
- **Warranty Upgrade (Preconfigured Support)**

  Services are available to meet the on-site response time targets that match the criticality of your systems.

  - 3, 4, or 5 years of service coverage
  - 1-year or 2-year post-warranty extensions
  - **Foundation Service**: 9x5 service coverage with next business day onsite response. YourDrive YourData is an optional extra (see below).
  - **Essential Service:** 24x7 service coverage with 4-hour onsite response or 24-hour committed repair (available only in select markets). Bundled with YourDrive YourData.
  - **Advanced Service:** 24x7 service coverage with 2-hour onsite response or 6-hour committed repair (available only in select markets). Bundled with YourDrive YourData.

- **Managed Services**

  Lenovo Managed Services provides continuous 24x7 remote monitoring (plus 24x7 call center availability) and proactive management of your data center using state-of-the-art tools, systems, and practices by a team of highly skilled and experienced Lenovo services professionals.

  Quarterly reviews check error logs, verify firmware & OS device driver levels, and software as needed. We'll also maintain records of latest patches, critical updates, and firmware levels, to ensure you systems are providing business value through optimized performance.

- **Technical Account Management (TAM)**

  A Lenovo Technical Account Manager helps you optimize the operation of your data center based on a deep understanding of your business. You gain direct access to your Lenovo TAM, who serves as your single point of contact to expedite service requests, provide status updates, and furnish reports to track incidents over time. In addition, your TAM will help proactively make service recommendations and manage your service relationship with Lenovo to make certain your needs are met.

- **Enterprise Server Software Support**

  Enterprise Software Support is an additional support service providing customers with software support on Microsoft, Red Hat, SUSE, and VMware applications and systems. Around the clock availability for critical problems plus unlimited calls and incidents helps customers address challenges fast, without incremental costs. Support staff can answer troubleshooting and diagnostic questions, address product comparability and interoperability issues, isolate causes of problems, report defects to software vendors, and more.

- **YourDrive YourData**

  Lenovo's YourDrive YourData is a multi-drive retention offering that ensures your data is always under your control, regardless of the number of drives that are installed in your Lenovo server. In the unlikely event of a drive failure, you retain possession of your drive while Lenovo replaces the failed drive part. Your data stays safely on your premises, in your hands. The YourDrive YourData service can be purchased in convenient bundles and is optional with Foundation Service. It is bundled with Essential Service and Advanced Service.

- **Health Check**

  Having a trusted partner who can perform regular and detailed health checks is central to maintaining efficiency and ensuring that your systems and business are always running at their best. Health Check supports Lenovo-branded server, storage, and networking devices, as well as select Lenovo-supported products from other vendors that are sold by Lenovo or a Lenovo-Authorized Reseller.

Examples of region-specific warranty terms are second or longer business day parts delivery or parts-only base warranty.

If warranty terms and conditions include onsite labor for repair or replacement of parts, Lenovo will dispatch a service technician to the customer site to perform the replacement. Onsite labor under base warranty is limited to labor for replacement of parts that have been determined to be field-replaceable units (FRUs). Parts that are determined to be customer-replaceable units (CRUs) do not include onsite labor under base warranty.

If warranty terms include parts-only base warranty, Lenovo is responsible for delivering only replacement parts that are under base warranty (including FRUs) that will be sent to a requested location for self-service. Parts-only service does not include a service technician being dispatched onsite. Parts must be changed at customer's own cost and labor and defective parts must be returned following the instructions supplied with the spare parts.

Lenovo Service offerings are region-specific. Not all preconfigured support and upgrade options are available in every region. For information about Lenovo service upgrade offerings that are available in your region, refer to the following resources:

- Service part numbers in Lenovo Data Center Solution Configurator (DCSC):
  http://dcsc.lenovo.com/#/services
- Lenovo Services Availability Locator
  http://lenovolocator.com/

For service definitions, region-specific details, and service limitations, please refer to the following documents:

- Lenovo Statement of Limited Warranty for Infrastructure Solutions Group (ISG) Servers and System Storage
  http://pcsupport.lenovo.com/us/en/solutions/ht503310
- Lenovo Data Center Services Agreement
  http://support.lenovo.com/us/en/solutions/ht116628

Services

Lenovo Services is a dedicated partner to your success. Our goal is to reduce your capital outlays, mitigate your IT risks, and accelerate your time to productivity.

Note: Some service options may not be available in all markets or regions. For more information, go to https://www.lenovo.com/services. For information about Lenovo service upgrade offerings that are available in your region, contact your local Lenovo sales representative or business partner.

Here's a more in-depth look at what we can do for you:

- **Asset Recovery Services**

  Asset Recovery Services (ARS) helps customers recover the maximum value from their end-of-life equipment in a cost-effective and secure way. On top of simplifying the transition from old to new equipment, ARS mitigates environmental and data security risks associated with data center equipment disposal. Lenovo ARS is a cash-back solution for equipment based on its remaining market value, yielding maximum value from aging assets and lowering total cost of ownership for your customers. For more information, see the ARS page, https://lenovopress.com/lp1266-reduce-e-waste-and-grow-your-bottom-line-with-lenovo-ars.

- **Assessment Services**

  An Assessment helps solve your IT challenges through an onsite, multi-day session with a Lenovo technology expert. We perform a tools-based assessment which provides a comprehensive and thorough review of a company's environment and technology systems. In addition to the technology based functional requirements, the consultant also discusses and records the non-functional business requirements, challenges, and constraints. Assessments help organizations like yours, no matter how large or small, get a better return on your IT investment and overcome challenges in the ever-changing technology landscape.

- **Design Services**

  Professional Services consultants perform infrastructure design and implementation planning to support your strategy. The high-level architectures provided by the assessment service are turned into low level designs and wiring diagrams, which are reviewed and approved prior to implementation. The implementation plan will demonstrate an outcome-based proposal to provide business capabilities through infrastructure with a risk-mitigated project plan.

- **Basic Hardware Installation**

  Lenovo experts can seamlessly manage the physical installation of your server, storage, or networking hardware. Working at a time convenient for you (business hours or off shift), the technician will unpack and inspect the systems on your site, install options, mount in a rack cabinet, connect to power and network, check and update firmware to the latest levels, verify operation, and dispose of the packaging, allowing your team to focus on other priorities.

- **Deployment Services**

  When investing in new IT infrastructures, you need to ensure your business will see quick time to value with little to no disruption. Lenovo deployments are designed by development and engineering teams who know our Products & Solutions better than anyone else, and our technicians own the process from delivery to completion. Lenovo will conduct remote preparation and planning, configure & integrate systems, validate systems, verify and update appliance firmware, train on administrative tasks, and provide post-deployment documentation. Customer's IT teams leverage our skills to enable IT staff to transform with higher level roles and tasks.

- **Integration, Migration, and Expansion Services**

  Move existing physical & virtual workloads easily, or determine technical requirements to support increased workloads while maximizing performance. Includes tuning, validation, and documenting ongoing run processes. Leverage migration assessment planning documents to perform necessary migrations.

Regulatory compliance

The ST550 server conforms to the following standards:

- Energy Star 3.0
- FCC - Verified to comply with Part 15 of the FCC Rules, Class A
- Canada ICES-003, issue 6, Class A
- UL/IEC 60950-1
- CSA C22.2 No. 60950-1
- IEC 62368-1:2014 (CB Certificate and CB Test Report)
- NOM-019
- Argentina IEC60950-1
- Japan VCCI, Class A
- Australia/New Zealand AS/NZS CISPR 32, Class A; AS/NZS 60950.1
- China CCC GB4943.1, GB9254 Class A, GB17625.1
- Taiwan BSMI CNS13438, Class A; CNS14336-1; CNS15663
- Korea KN32, Class A; KN35
- Russia, Belorussia and Kazakhstan, TR CU 020/2011 (for EMC) and TR CU 004/2011 (for safety)
- IEC 60950-1 (CB Certificate and CB Test Report)
- CE Mark (EN55032 Class A, EN60950-1, EN55024, EN61000-3-2, EN61000-3-3)
- CISPR 32, Class A
- TUV-GS (EN60950-1 /IEC60950-1,EK1-ITB2000)
- RoHS Directive
- ErP lot3
- JESL

External drive enclosures

The server supports attachment to external drive enclosures using a RAID controller with external ports or a SAS host bus adapter. Adapters supported by the server are listed in the SAS adapters for external storage section.

Note: Information provided in this section is for ordering reference purposes only. For the operating system and adapter support details, refer to the interoperability matrix for a particular storage enclosure that can be found on the Lenovo Data Center Support web site:
http://datacentersupport.lenovo.com

Table 64. External drive enclosures

Model	Description
4587HC1	Lenovo Storage D1212 Disk Expansion Enclosure (2U enclosure wth 12x LFF drive bays)
4587HC2	Lenovo Storage D1224 Disk Expansion Enclosure (2U enclosure wth 24x SFF drive bays)
6413HC1	Lenovo Storage D3284 High Density Expansion Enclosure (5U enclosure wth 84x LFF drive bays)
7DAHCTO1WW	Lenovo ThinkSystem D4390 Direct Attached Storage (4U enclosure wth 90x LFF drive bays)

For details about supported drives, adapters, and cables, see the following Lenovo Press Product Guides:

- Lenovo Storage D1212 and D1224
  http://lenovopress.lenovo.com/lp0512
- Lenovo Storage D3284
  http://lenovopress.lenovo.com/lp0513
- Lenovo ThinkSystem D4390
  https://lenovopress.lenovo.com/lp1681

External storage systems

Lenovo offers the ThinkSystem DE Series and ThinkSystem DM Series external storage systems for high-performance storage. See the DE Series and DM Series product guides for specific controller models, expansion enclosures and configuration options:

- ThinkSystem DE Series Storage
  https://lenovopress.com/storage/thinksystem/de-series#rt=product-guide
- ThinkSystem DM Series Storage
  https://lenovopress.com/storage/thinksystem/dm-series#rt=product-guide

External backup units

The following table lists the available external SAS tape backup options.

Tip: Verify the end-to-end support of an IBM tape backup solution through the IBM System Storage Interoperation Center (SSIC): http://www.ibm.com/systems/support/storage/ssic

Table 65. External SAS backup options

Part number	Description
External SAS tape backup drives	
6160S7E	IBM TS2270 Tape Drive Model H7S
6160S8E	IBM TS2280 Tape Drive Model H8S
6160S9E	IBM TS2290 Tape Drive Model H9S
External SAS tape backup autoloaders	
6171S7R	IBM TS2900 Tape Autoloader w/LTO7 HH SAS
6171S8R	IBM TS2900 Tape Autoloader w/LTO8 HH SAS
6171S9R	IBM TS2900 Tape Autoloader w/LTO9 HH SAS
External tape backup libraries	
6741A1F	IBM TS4300 3U Tape Library-Base Unit
SAS backup drives for TS4300 Tape Library	
01KP937	LTO 7 HH SAS Drive
01KP953	LTO 8 HH SAS Drive
02JH836	LTO 9 HH SAS Drive

For more information, see the list of Product Guides in the Backup units category: https://lenovopress.com/servers/options/backup

Fibre Channel SAN switches

Lenovo offers the ThinkSystem DB Series of Fibre Channel SAN switches for high-performance storage expansion. See the DB Series product guides for models and configuration options:

- ThinkSystem DB Series SAN Switches: https://lenovopress.com/storage/switches/rack#rt=product-guide

Uninterruptible power supply units

The following table lists the uninterruptible power supply (UPS) units that are offered by Lenovo.

Table 66. Uninterruptible power supply units

Part number	Description
Tower UPS units	
55951AX	T1kVA Tower UPS (100-125VAC)
55951KX	T1kVA Tower UPS (200-240VAC)
55952AX	T1.5kVA Tower UPS (100-125VAC)
55952KX	T1.5kVA Tower UPS (200-240VAC)
Rack-mounted or tower UPS units	
55941AX	RT1.5kVA 2U Rack or Tower UPS (100-125VAC)
55941KX	RT1.5kVA 2U Rack or Tower UPS (200-240VAC)
55942AX	RT2.2kVA 2U Rack or Tower UPS (100-125VAC)
55942KX	RT2.2kVA 2U Rack or Tower UPS (200-240VAC)
55943AX	RT3kVA 2U Rack or Tower UPS (100-125VAC)
55943KX	RT3kVA 2U Rack or Tower UPS (200-240VAC)
55945KX	RT5kVA 3U Rack or Tower UPS (200-240VAC)
55946KX	RT6kVA 3U Rack or Tower UPS (200-240VAC)
55948KX	RT8kVA 6U Rack or Tower UPS (200-240VAC)
55949KX	RT11kVA 6U Rack or Tower UPS (200-240VAC)
55948PX	RT8kVA 6U 3:1 Phase Rack or Tower UPS (380-415VAC)
55949PX	RT11kVA 6U 3:1 Phase Rack or Tower UPS (380-415VAC)
Rack-mounted UPS units	
55943KT†	ThinkSystem RT3kVA 2U Standard UPS (200-230VAC) (2x C13 10A, 2x GB 10A, 1x C19 16A outlets)
55943LT†	ThinkSystem RT3kVA 2U Long Backup UPS (200-230VAC) (2x C13 10A, 2x GB 10A, 1x C19 16A outlets)
55946KT†	ThinkSystem RT6kVA 5U UPS (200-230VAC) (2x C13 10A outlets, 1x Terminal Block output)
5594XKT†	ThinkSystem RT10kVA 5U UPS (200-230VAC) (2x C13 10A outlets, 1x Terminal Block output)

† Only available in China and the Asia Pacific market.

For more information, see the list of Product Guides in the UPS category:
https://lenovopress.com/servers/options/ups

Power distribution units

The following table lists the power distribution units (PDUs) that are offered by Lenovo.

Table 67. Power distribution units

Part number	Feature code	Description	ANZ	ASEAN	Brazil	EET	MEA	RUCIS	WE	HTK	INDIA	JAPAN	LA	NA	PRC
0U Basic PDUs															
00YJ776	ATZY	0U 36 C13/6 C19 24A 1 Phase PDU	N	Y	Y	N	N	N	N	N	N	Y	Y	Y	N

Part number	Feature code	Description	ANZ	ASEAN	Brazil	EET	MEA	RUCIS	WE	HTK	INDIA	JAPAN	LA	NA	PRC
00YJ777	ATZZ	0U 36 C13/6 C19 32A 1 Phase PDU	Y	Y	N	Y	Y	Y	Y	Y	Y	N	N	Y	Y
0U Switched and Monitored PDUs															
00YJ783	AU04	0U 12 C13/12 C19 Switched and Monitored 48A 3 Phase PDU	N	N	Y	N	N	N	Y	N	N	Y	Y	Y	N
00YJ781	AU03	0U 20 C13/4 C19 Switched and Monitored 24A 1 Phase PDU	N	N	Y	N	Y	N	Y	N	N	Y	Y	Y	N
1U Switched and Monitored PDUs															
4PU7A81117	BNDV	1U 18 C19/C13 switched and monitored 48A 3P WYE PDU - ETL	N	N	N	N	N	N	N	N	N	N	N	Y	N
4PU7A77467	BLC4	1U 18 C19/C13 Switched and Monitored 80A 3P Delta PDU	N	N	N	N	N	N	N	N	N	Y	N	Y	N
4PU7A77469	BLC6	1U 12 C19/C13 switched and monitored 60A 3P Delta PDU	N	N	N	N	N	N	N	N	N	N	N	Y	N
4PU7A77468	BLC5	1U 12 C19/C13 switched and monitored 32A 3P WYE PDU	Y	Y	Y	Y	Y	Y	Y	Y	Y	N	Y	Y	Y
4PU7A81118	BNDW	1U 18 C19/C13 switched and monitored 48A 3P WYE PDU - CE	Y	Y	Y	Y	Y	Y	Y	Y	Y	N	Y	N	Y
1U Ultra Density Enterprise PDUs (9x IEC 320 C13 + 3x IEC 320 C19 outlets)															
71763NU	6051	Ultra Density Enterprise C19/C13 PDU 60A/208V/3PH	N	N	Y	N	N	N	N	N	N	Y	Y	Y	N
71762NX	6091	Ultra Density Enterprise C19/C13 PDU Module	Y	Y	Y	Y	Y	Y	Y	Y	Y	Y	Y	Y	Y
1U C13 Enterprise PDUs (12x IEC 320 C13 outlets)															
39Y8941	6010	DPI C13 Enterprise PDU Module (WW)	Y	Y	Y	Y	Y	Y	Y	Y	Y	Y	Y	Y	Y
1U Front-end PDUs (3x IEC 320 C19 outlets)															
39Y8938	6002	DPI Single-phase 30A/120V Front-end PDU (US)	Y	Y	Y	Y	Y	Y	Y	Y	Y	Y	Y	Y	Y
39Y8939	6003	DPI Single-phase 30A/208V Front-end PDU (US)	Y	Y	Y	Y	Y	Y	Y	Y	Y	Y	Y	Y	Y
39Y8934	6005	DPI Single-phase 32A/230V Front-end PDU (International)	Y	Y	Y	Y	Y	Y	Y	Y	Y	Y	Y	Y	Y
39Y8940	6004	DPI Single-phase 60A/208V Front-end PDU (US)	Y	N	Y	Y	Y	Y	Y	N	N	Y	Y	Y	N
39Y8935	6006	DPI Single-phase 63A/230V Front-end PDU (International)	Y	Y	Y	Y	Y	Y	Y	Y	Y	Y	Y	Y	Y
1U NEMA PDUs (6x NEMA 5-15R outlets)															
39Y8905	5900	DPI 100-127V NEMA PDU	Y	Y	Y	Y	Y	Y	Y	Y	Y	Y	Y	Y	Y
Line cords for 1U PDUs that ship without a line cord															
40K9611	6504	4.3m, 32A/380-415V, EPDU/IEC 309 3P+N+G 3ph wye (non-US) Line Cord	Y	Y	Y	Y	Y	Y	Y	Y	Y	Y	Y	Y	Y
40K9612	6502	4.3m, 32A/230V, EPDU to IEC 309 P+N+G (non-US) Line Cord	Y	Y	Y	Y	Y	Y	Y	Y	Y	Y	Y	Y	Y
40K9613	6503	4.3m, 63A/230V, EPDU to IEC 309 P+N+G (non-US) Line Cord	Y	Y	Y	Y	Y	Y	Y	Y	Y	Y	Y	Y	Y

Part number	Feature code	Description	ANZ	ASEAN	Brazil	EET	MEA	RUCIS	WE	HTK	INDIA	JAPAN	LA	NA	PRC
40K9614	6500	4.3m, 30A/208V, EPDU to NEMA L6-30P (US) Line Cord	Y	Y	Y	Y	Y	Y	Y	Y	Y	Y	Y	Y	Y
40K9615	6501	4.3m, 60A/208V, EPDU to IEC 309 2P+G (US) Line Cord	N	N	Y	N	N	N	Y	N	N	Y	Y	Y	N
40K9617	6505	4.3m, 32A/230V, Souriau UTG Female to AS/NZ 3112 (Aus/NZ) Line Cord	Y	Y	Y	Y	Y	Y	Y	Y	Y	Y	Y	Y	Y
40K9618	6506	4.3m, 32A/250V, Souriau UTG Female to KSC 8305 (S. Korea) Line Cord	Y	Y	Y	Y	Y	Y	Y	Y	Y	Y	Y	Y	Y

For more information, see the Lenovo Press documents in the PDU category:
https://lenovopress.com/servers/options/pdu

Rack cabinets

Rack installation kits are described in the Rack installation section.

The following table lists the supported rack cabinets.

Table 68. Rack cabinets

Part number	Description
7D2B0001WW / 7D2N0001WW	12U 1200mm Deep Micro Datacenter Rack
7D2C0001WW / 7D2P0001WW	18U 1200mm Deep Micro Datacenter Rack
93072RX	25U Standard Rack (1000mm)
93072PX	25U Static S2 Standard Rack (1000mm)
7D6DA007WW	ThinkSystem 42U Onyx Primary Heavy Duty Rack Cabinet (1200mm)
7D6DA008WW	ThinkSystem 42U Pearl Primary Heavy Duty Rack Cabinet (1200mm)
93604PX	42U 1200mm Deep Dynamic Rack
93614PX	42U 1200mm Deep Static Rack
93634PX	42U 1100mm Dynamic Rack
93634EX	42U 1100mm Dynamic Expansion Rack
93074RX	42U Standard Rack (1000mm)
7D6EA009WW	ThinkSystem 48U Onyx Primary Heavy Duty Rack Cabinet (1200mm)
7D6EA00AWW	ThinkSystem 48U Pearl Primary Heavy Duty Rack Cabinet (1200mm)

For specifications about these racks, see the Lenovo Rack Cabinet Reference, available from:
https://lenovopress.com/lp1287-lenovo-rack-cabinet-reference

For more information, see the list of Product Guides in the Rack cabinets category:
https://lenovopress.com/servers/options/racks

KVM console options

The following table lists the supported KVM consoles.

Table 69. KVM console

Part number	Description
4XF7A84188	ThinkSystem 18.5" LCD Console (with US English keyboard)

The following table lists the available KVM switches and the options that are supported with them.

Table 71. KVM switches and options

Part number	Description
KVM Console switches	
1754D2X	Global 4x2x32 Console Manager (GCM32)
1754D1X	Global 2x2x16 Console Manager (GCM16)
1754A2X	Local 2x16 Console Manager (LCM16)
1754A1X	Local 1x8 Console Manager (LCM8)
Cables for GCM and LCM Console switches	
46M5383	Virtual Media Conversion Option Gen2 (VCO2)
46M5382	Serial Conversion Option (SCO)

For more information, see the list of Product Guides in the KVM Switches and Consoles category:
http://lenovopress.com/servers/options/kvm

Lenovo Financial Services

Lenovo Financial Services reinforces Lenovo's commitment to deliver pioneering products and services that are recognized for their quality, excellence, and trustworthiness. Lenovo Financial Services offers financing solutions and services that complement your technology solution anywhere in the world.

We are dedicated to delivering a positive finance experience for customers like you who want to maximize your purchase power by obtaining the technology you need today, protect against technology obsolescence, and preserve your capital for other uses.

We work with businesses, non-profit organizations, governments and educational institutions to finance their entire technology solution. We focus on making it easy to do business with us. Our highly experienced team of finance professionals operates in a work culture that emphasizes the importance of providing outstanding customer service. Our systems, processes and flexible policies support our goal of providing customers with a positive experience.

We finance your entire solution. Unlike others, we allow you to bundle everything you need from hardware and software to service contracts, installation costs, training fees, and sales tax. If you decide weeks or months later to add to your solution, we can consolidate everything into a single invoice.

Our Premier Client services provide large accounts with special handling services to ensure these complex transactions are serviced properly. As a premier client, you have a dedicated finance specialist who manages your account through its life, from first invoice through asset return or purchase. This specialist develops an in-depth understanding of your invoice and payment requirements. For you, this dedication provides a high-quality, easy, and positive financing experience.

For your region-specific offers, please ask your Lenovo sales representative or your technology provider about the use of Lenovo Financial Services. For more information, see the following Lenovo website:

https://www.lenovo.com/us/en/landingpage/lenovo-financial-services/

Related publications and links

For more information, see these resources:

- Lenovo ThinkSystem ST550 product page:
  https://www.lenovo.com/us/en/data-center/servers/towers/ThinkSystem-ST550/p/77XX7TRST50
- Interactive 3D Tour of the ThinkSystem ST550:
  https://lenovopress.com/LP0675
- ThinkSystem ST550 drivers and support
  http://datacentersupport.lenovo.com/products/servers/thinksystem/st550/7x09/downloads
- Lenovo Hardware Installation & Removal Videos on the ST550:
  - YouTube: https://www.youtube.com/playlist?list=PLYV5R7hVcs-Acsjj4tU79GzKnWG316BYn
  - Youku: https://list.youku.com/albumlist/show/id_50483452
- Lenovo ThinkSystem ST550 product publications:
  http://thinksystem.lenovofiles.com/help/index.jsp
  - Quick Start
  - Rack Installation Guide
  - Setup Guide
  - Hardware Maintenance Manual
  - Messages and Codes Reference
  - Memory Population Reference
- ServerProven hardware compatibility:
  http://www.lenovo.com/us/en/serverproven

Related product families

Product families related to this document are the following:

- 2-Socket Tower Servers
- ThinkSystem ST550 Server

Notices

Lenovo may not offer the products, services, or features discussed in this document in all countries. Consult your local Lenovo representative for information on the products and services currently available in your area. Any reference to a Lenovo product, program, or service is not intended to state or imply that only that Lenovo product, program, or service may be used. Any functionally equivalent product, program, or service that does not infringe any Lenovo intellectual property right may be used instead. However, it is the user's responsibility to evaluate and verify the operation of any other product, program, or service. Lenovo may have patents or pending patent applications covering subject matter described in this document. The furnishing of this document does not give you any license to these patents. You can send license inquiries, in writing, to:

Lenovo (United States), Inc.
8001 Development Drive
Morrisville, NC 27560
U.S.A.
Attention: Lenovo Director of Licensing

LENOVO PROVIDES THIS PUBLICATION ”AS IS” WITHOUT WARRANTY OF ANY KIND, EITHER EXPRESS OR IMPLIED, INCLUDING, BUT NOT LIMITED TO, THE IMPLIED WARRANTIES OF NON-INFRINGEMENT, MERCHANTABILITY OR FITNESS FOR A PARTICULAR PURPOSE. Some jurisdictions do not allow disclaimer of express or implied warranties in certain transactions, therefore, this statement may not apply to you.

This information could include technical inaccuracies or typographical errors. Changes are periodically made to the information herein; these changes will be incorporated in new editions of the publication. Lenovo may make improvements and/or changes in the product(s) and/or the program(s) described in this publication at any time without notice.

The products described in this document are not intended for use in implantation or other life support applications where malfunction may result in injury or death to persons. The information contained in this document does not affect or change Lenovo product specifications or warranties. Nothing in this document shall operate as an express or implied license or indemnity under the intellectual property rights of Lenovo or third parties. All information contained in this document was obtained in specific environments and is presented as an illustration. The result obtained in other operating environments may vary. Lenovo may use or distribute any of the information you supply in any way it believes appropriate without incurring any obligation to you.

Any references in this publication to non-Lenovo Web sites are provided for convenience only and do not in any manner serve as an endorsement of those Web sites. The materials at those Web sites are not part of the materials for this Lenovo product, and use of those Web sites is at your own risk. Any performance data contained herein was determined in a controlled environment. Therefore, the result obtained in other operating environments may vary significantly. Some measurements may have been made on development-level systems and there is no guarantee that these measurements will be the same on generally available systems. Furthermore, some measurements may have been estimated through extrapolation. Actual results may vary. Users of this document should verify the applicable data for their specific environment.

© Copyright Lenovo 2023. All rights reserved.

This document, LP1055, was created or updated on August 2, 2023.

Send us your comments in one of the following ways:

- Use the online Contact us review form found at:
  https://lenovopress.lenovo.com/LP1055
- Send your comments in an e-mail to:
  comments@lenovopress.com

This document is available online at https://lenovopress.lenovo.com/LP1055.

Trademarks

Lenovo and the Lenovo logo are trademarks or registered trademarks of Lenovo in the United States, other countries, or both. A current list of Lenovo trademarks is available on the Web at https://www.lenovo.com/us/en/legal/copytrade/.

The following terms are trademarks of Lenovo in the United States, other countries, or both:
Lenovo®
AnyBay®
Bootable Media Creator
Flex System
Lenovo Services
RackSwitch
ServerProven®
System x®
ThinkServer®
ThinkSystem®
TopSeller
TruDDR4
UpdateXpress System Packs
XClarity®

The following terms are trademarks of other companies:

Intel®, Intel Optane™, and Xeon® are trademarks of Intel Corporation or its subsidiaries.

Linux® is the trademark of Linus Torvalds in the U.S. and other countries.

ActiveX®, Hyper-V®, Microsoft®, PowerShell, Windows PowerShell®, Windows Server®, and Windows® are trademarks of Microsoft Corporation in the United States, other countries, or both.

SPECpower® is a trademark of the Standard Performance Evaluation Corporation (SPEC).

Other company, product, or service names may be trademarks or service marks of others.