Lenovo ThinkSystem SR850P Server
Product Guide

The Lenovo ThinkSystem SR850P is a 4-socket performance server that features a streamlined 2U rack design that is optimized for price and performance, with best-in-class flexibility and expandability. The four processors in the SR850P are configured in a mesh configuration to maximize performance in multi-threaded applications. The ThinkSystem SR850P's agile design provides rapid upgrades for memory, and its large, flexible storage capacity helps to keep pace with data growth.

Suggested uses: General business consolidation, data analytics, virtualization, database, dense computing and scientific applications



Figure 1. Lenovo ThinkSystem SR850P

Did you know?

The key difference between the SR850P and the SR850 is the way the four processors are connected together. With the SR850P, the four processors are connected in a "mesh" configuration, where each processor is directly connected to the 3 other processors via 3 high-speed UPI links. On the other hand, the SR850 uses a "ring" configuration, where each processor connects only to the two adjacent processors. You will see a performance benefit of the mesh configuration with multi-threaded applications that have a lot of thread-to-thread communications and memory transfers.

With a dense 2U design, the Lenovo ThinkSystem SR850P provides advanced features and capabilities. These include support for four sockets and 48 DIMMs, mix and match internal storage, and enterprise-grade systems management with the embedded Lenovo XClarity Controller.

The SR850P server has space for 16x 2.5-inch drive bays, all of which can be configured as NVMe drive bays. NVMe drives are high-speed, low-latency storage, ideal for storage tiering.

Key features

The ThinkSystem SR850P server supports four second-generation Intel Xeon Scalable Gold or Platinum processors. Built for standard workloads like general business applications and server consolidation, it can also accommodate high-growth areas such as databases and virtualization. The ThinkSystem SR850P's agile design permits rapid upgrades for memory, and its large, flexible storage capacity helps to keep pace with data growth.

With the capability to support up to 48 DIMMs, four sockets, mix-and-match internal storage with up to 16 drives, and a dedicated slot for Gigabit or 10 GbE networking, the SR850P provides unmatched features and capabilities in a dense 2U rack-mount design.

Scalability and performance

The SR850P offers numerous features to boost performance, improve scalability and reduce costs:

- Supports second-generation Intel Xeon Processor Scalable processors
- Supports Gold and Platinum level processors in the Intel Xeon Processor Scalable Family. Processors supported have up to 28 cores, core speeds of up to 3.6GHz, and TDP ratings of up to 205W.
- Supports four processors, 112 cores, and 224 threads maximize the concurrent execution of multithreaded applications.
- Intelligent and adaptive system performance with Intel Turbo Boost Technology 2.0 allows processor cores to run at maximum speeds during peak workloads by temporarily going beyond processor TDP.
- Intel Hyper-Threading Technology boosts performance for multithreaded applications by enabling simultaneous multithreading within each processor core, up to two threads per core.
- Intel Virtualization Technology integrates hardware-level virtualization hooks that allow operating system vendors to better use the hardware for virtualization workloads.
- Intel Speed Select Technology provides improvements in server utilization and guaranteed per-core performance service levels with more granular control over processor performance.
- Intel Deep Learning Boost (Vector Neural Network Instruction set or VNNI) is designed to deliver significant, more efficient Deep Learning (Inference) acceleration for high-performance Artificial Intelligence (AI) workloads.
- Intel Advanced Vector Extensions 512 (AVX-512) enable acceleration of enterprise-class workloads, including databases and enterprise resource planning (ERP).
- Support for up to 48 TruDDR4 memory DIMMs operating at up to 2933 MHz means you have the fastest available memory subsystem and memory capacity of up to 6 TB using 48x 128 GB 3DS RDIMMs
- Supports 2933 MHz Performance+ memory DIMMs which allow configurations of 2 DIMMs per channel to operate at the 2933 MHz rated memory speed.
- Supports Intel Optane DC Persistent Memory; up to 24 Data Center Persistent Memory Modules (DCPMMs) can be installed in conjunction with regular system memory. DCPMMs are up to 512 GB each, for a total of up to 12 TB of Persistent Memory.
- The use of solid-state drives (SSDs) instead of, or along with, traditional spinning drives (HDDs), can improve I/O performance. An SSD can support up to 100 times more I/O operations per second (IOPS) than a typical HDD.
- Up to 16x 2.5-inch drive bays -- supporting combinations of SAS or SATA HDDs, SAS or SATA SSDs, and NVMe PCIe SSDs -- provide a flexible and scalable all-in-one platform to meet your increasing demands.
- Support for up to 16x NVMe PCIe SSDs in a 2.5-inch form factor maximizes drive I/O performance, in terms of throughput, bandwidth, and latency.
- New high-speed RAID controllers from Broadcom provide 12 Gb SAS connectivity to the drive backplanes. A variety of RAID adapters are available, with cache up to 4 GB and support for 16 drives on a single controller.

- Supports the Lenovo patented-design M.2 adapter for convenient operating system boot functions. Available M.2 adapters support either one M.2 drive or two M.2 drives in a RAID 1 configuration for boot drive performance and reliability.
- The server has a dedicated flexible LAN-on-motherboard (LOM) slot, supporting a variety of 10 GbE or Gigabit Ethernet adapters that do not occupy one of the standard PCIe slots.
- A total of up to 8 general-purpose PCIe 3.0 slots plus slots dedicated to the LOM adapter and the M.2 adapter.
- The server offers PCI Express 3.0 I/O expansion capabilities that improve the theoretical maximum bandwidth by almost 100% (8 GTps per link using 128b/130b encoding) compared to the previous generation of PCI Express 2.0 (5 GTps per link using 8b/10b encoding).

Availability and serviceability

The SR850P provides many features to simplify serviceability and increase system uptime:

- The server offers Single Device Data Correction (SDDC, also known as Chipkill), Adaptive Double-Device Data Correction (ADDDC, also known as Redundant Bit Steering or RBS), memory mirroring, and memory rank sparing for redundancy in the event of a non-correctable memory failure.
- The server offers hot-swap drives, supporting RAID redundancy for data protection and greater system uptime.
- The Dual M.2 Boot Adapter supports RAID-1 which enables two installed M.2 drives to be configured as a redundant pair.
- The server has up to two hot-swap redundant power supplies and six hot-swap redundant fans to provide availability for business-critical applications.
- The power-source-independent light path diagnostics uses LEDs to lead the technician to failed (or failing) components, which simplifies servicing, speeds up problem resolution, and helps improve system availability.
- The optional LCD system information display panel provides more detailed diagnostics by displaying all error messages and VPD data needed for a service call, thereby aiding with problem resolution and system uptime.
- Proactive Platform Alerts (including PFA and SMART alerts): Processors, voltage regulators, memory, internal storage (SAS/SATA HDDs and SSDs, NVMe SSDs, M.2 storage, flash storage adapters), fans, power supplies, RAID controllers, server ambient and subcomponent temperatures. Alerts can be surfaced through the XClarity Controller to managers such as Lenovo XClarity Administrator, VMware vCenter, and Microsoft System Center. These proactive alerts let you take appropriate actions in advance of possible failure, thereby increasing server uptime and application availability.
- Solid-state drives (SSDs) offer more reliability than traditional mechanical HDDs for greater uptime.
- The built-in XClarity Controller continuously monitors system parameters, triggers alerts, and performs recovery actions in case of failures to minimize downtime.
- Built-in diagnostics in UEFI, using Lenovo XClarity Provisioning Manager, speed up troubleshooting tasks to reduce service time.
- Lenovo XClarity Provisioning Manager collects and saves service data to USB key drive or remote CIFS share folder, for troubleshooting and to reduce service time.
- Auto restart in the event of a momentary loss of AC power (based on the power policy setting in the XClarity Controller service processor)
- Support for the XClarity Administrator Mobile app running on a supported smartphone and connected to the server through the service-enabled USB port, enables additional local systems management functions.
- Three-year or one-year customer-replaceable unit and onsite limited warranty, 9 x 5 next business day. Optional service upgrades are available.

Manageability and security

Powerful systems management features simplify local and remote management of the SR850P:

- Lenovo XClarity Controller (XCC) monitors server availability and performs remote management. XCC Advanced is standard, which enables remote KVM. Optional XCC Enterprise enables the mounting of remote media files (ISO and IMG image files), boot capture, and power capping.
- Lenovo XClarity Administrator offers comprehensive hardware management tools that help to increase uptime, reduce costs and improve productivity through advanced server management capabilities.
- New UEFI-based Lenovo XClarity Provisioning Manager, accessible from F1 during boot, provides system inventory information, graphical UEFI Setup, platform update function, RAID Setup wizard, operating system installation function, and diagnostic functions.
- Support for Lenovo XClarity Energy Manager, which captures real-time power and temperature data from the server and provides automated controls to lower energy costs.
- Integrated Trusted Platform Module (TPM) 2.0 support enables advanced cryptographic methods, such as digital signatures and remote attestation.
- Supports Secure Boot to ensure only a digitally signed operating system can be used. Supported with HDDs and SSDs, as well as M.2 drives in the M.2 Adapter.
- Industry-standard Advanced Encryption Standard (AES) NI support for faster, stronger encryption.
- Intel Execute Disable Bit functionality can prevent certain classes of malicious buffer overflow attacks when combined with a supported operating system.
- Intel Trusted Execution Technology provides enhanced security through hardware-based resistance to malicious software attacks, allowing an application to run in its own isolated space, protected from all other software running on a system.

Energy efficiency

The SR850P offers the following energy-efficiency features to save energy, reduce operational costs, and increase energy availability:

- Energy-efficient planar components help lower operational costs.
- High-efficiency power supplies with 80 PLUS Platinum certifications
- Intel Intelligent Power Capability turns individual processor elements on and off as needed to reduce power draw.
- Low-voltage 1.2 V DDR4 memory offers energy savings compared to 1.35 V and 1.5 V DDR3 DIMMs.
- Solid-state drives (SSDs) consume as much as 80% less power than traditional spinning 2.5-inch HDDs.
- The server uses hexagonal ventilation holes, which can be grouped more densely than round holes, providing more efficient airflow through the system and thus keeping your system cooler.
- Optional Lenovo XClarity Energy Manager provides advanced data center power notification, analysis, and policy-based management to help achieve lower heat output and reduced cooling needs.

Components and connectors

The following figure shows the front of the server.

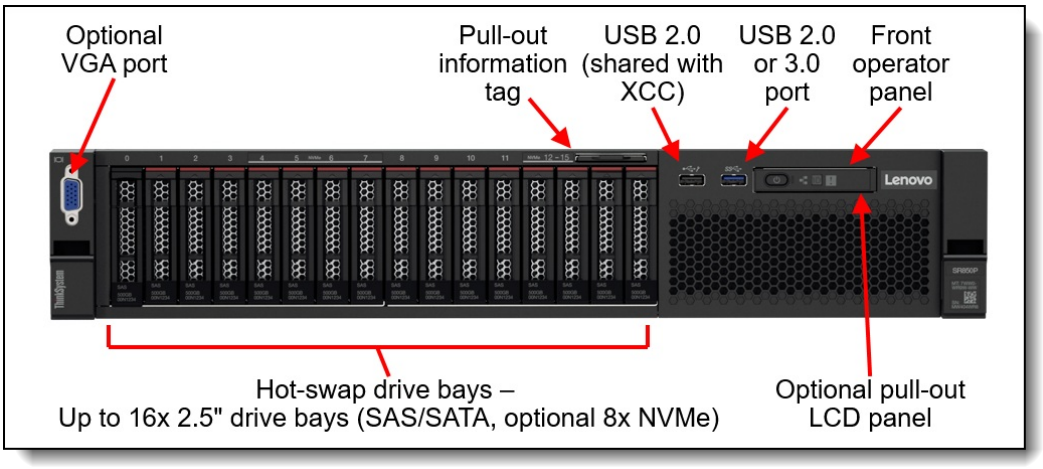

Figure 2. Front view of the Lenovo ThinkSystem SR850P

The following figure shows the rear of the server.

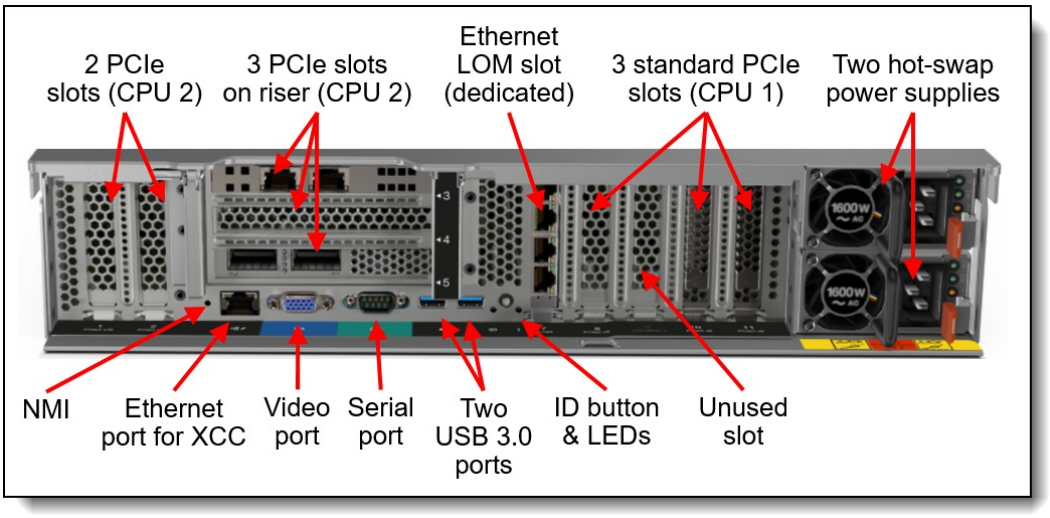

Figure 3. Rear view of the Lenovo ThinkSystem SR850P

The following figure shows the locations of key components inside the server.

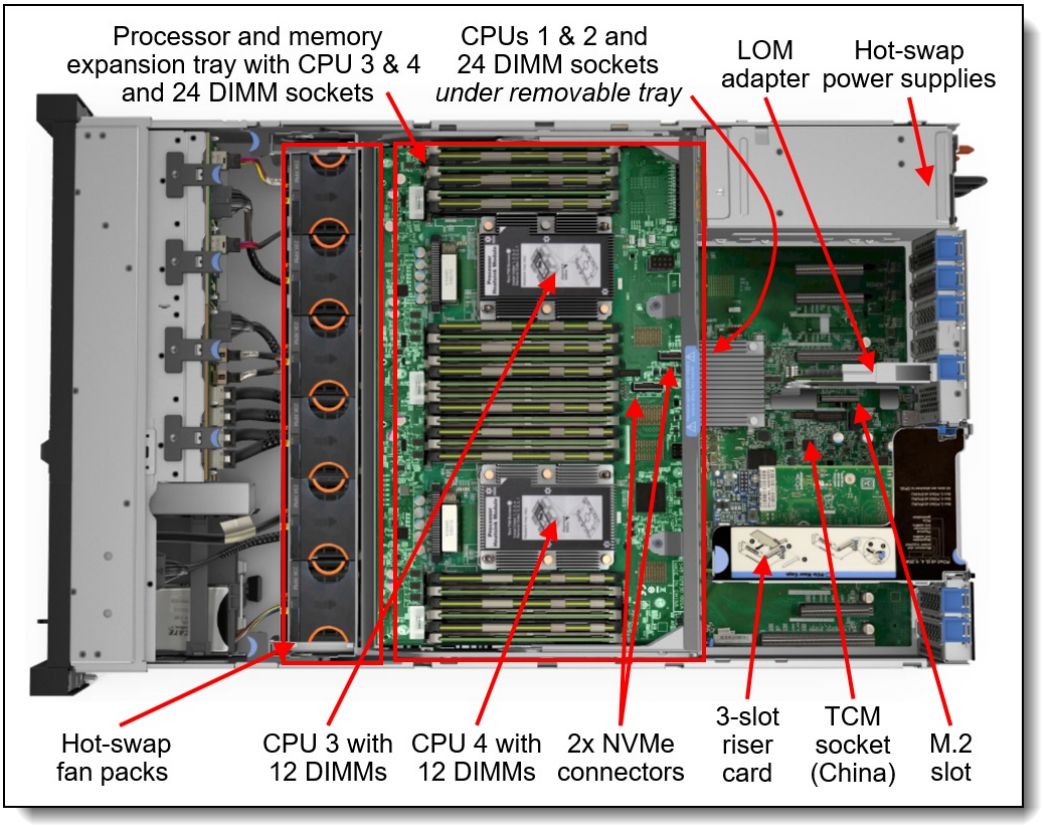

Figure 4. Internal view of the Lenovo ThinkSystem SR850P

System architecture

The following figure shows the architectural block diagram of the SR850P, showing the major components and their connections.

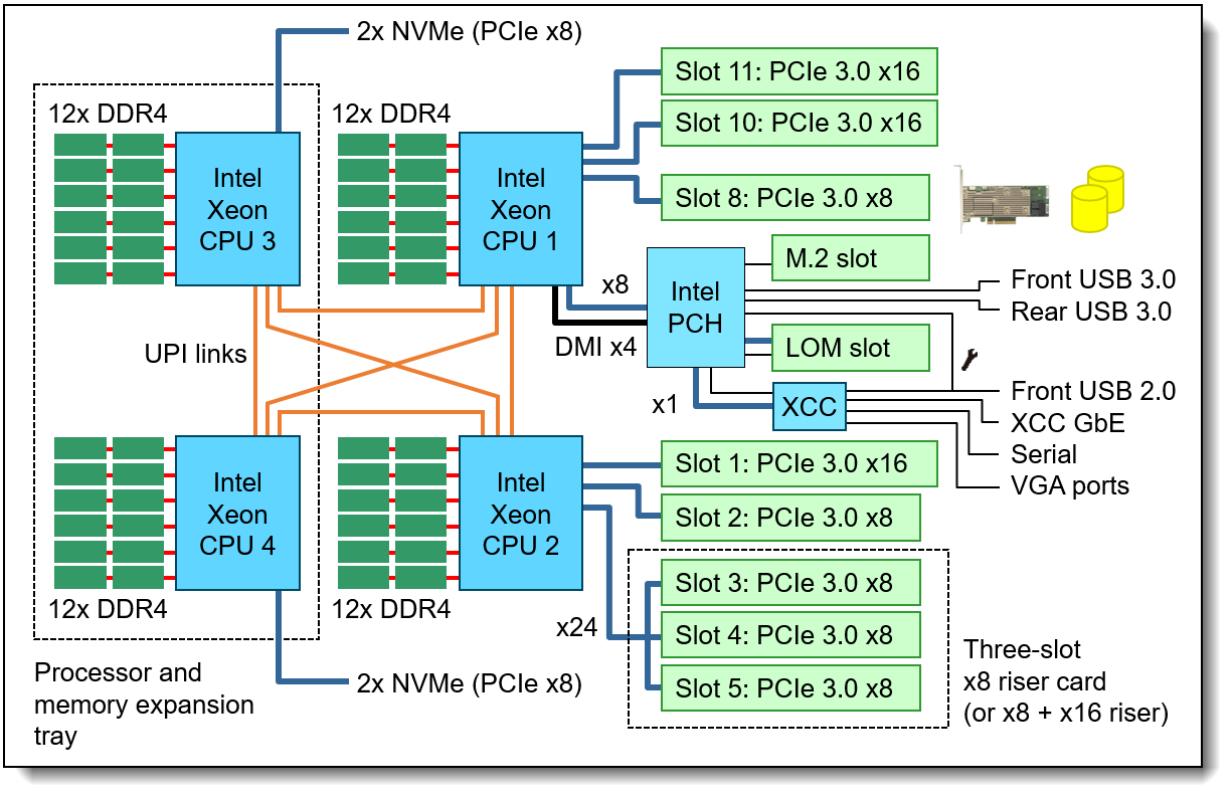

Figure 5. SR850P architectural block diagram

Standard specifications

The following table lists the standard specifications.

Table 1. Standard specifications

Components	Specification
Machine types	7D2F - 1-year warranty 7D2G - 3-year warranty 7D2H - SAP HANA configurations with 3-year warranty
Form factor	2U rack.
Processor	Four second-generation Intel Xeon Processor Scalable Family of processors, either Gold or Platinum level processors (formerly codename "Cascade Lake"). Supports processors up to 28 cores, core speeds up to 3.8 GHz, and TDP ratings up to 205W. Two processor sockets on the system board and two processors on the Processor and Memory Expansion Tray. Three Intel Ultra Path Interconnect (UPI) links at 10.4 GT/s each. The four processors are connected in a mesh topology.
Chipset	Intel C624 "Lewisburg" chipset

Components	Specification
Memory	Up to 48 DIMM slots (12 DIMMs per processor). Each processor has 6 memory channels, with 2 DIMMs per channel. Lenovo TruDDR4 RDIMMs, LRDIMMs and 3DS RDIMMs are supported. There are 24 DIMM sockets on the system board, and an additional 24 DIMM sockets on the processor and memory expansion tray (standard on most models). DIMM slots are shared between standard system memory and persistent memory. DIMMs are available in three speeds: 2666 MHz, 2933 MHz and Performance+ 2933 MHz. Performance+ DIMMs support 2993 MHz with two DIMMs installed per channel (2DPC), whereas 2933 MHz DIMMs support 2933 MHz with only 1 DIMM per channel (1DPC).
Persistent memory	Supports up to 24 Intel Optane DC Persistent Memory modules (DCPMMs) installed in the DIMM slots. Persistent memory is installed in combination with system memory DIMMs.
Memory maximums	• With system memory DIMMs: Up to 6TB with 48x 128GB 3DS RDIMMs and four processors (1.5TB per processor) • With Persistent Memory in memory mode: Up to 12TB of Persistent Memory with 24x 512GB Intel Optane DC Persistent Memory modules and eight processors (3TB per processor) • With Persistent Memory in AppDirect mode: Up to 15TB total memory (12TB of Persistent Memory using 24x 512GB DCPMMs + 3TB of system memory using 24x 128GB 3DS RDIMMs and four processors) (3.75TB per processor) **Note**: Support of more than 1TB per processor (more than 4TB for a 4-processor system) requires M-suffix or L-suffix processors with 2TB or 4.5TB memory support respectively. These calculations include any Persistent Memory installed. See the Processor options section for information.
Memory protection	ECC, SDDC (for x4-based memory DIMMs), ADDDC (for x4-based memory DIMMs), memory mirroring, and memory sparing.
Disk drive bays	Up to 16 2.5-inch hot-swap SAS/SATA bays.
Maximum internal storage	• 491.52TB using 16x 30.72TB 2.5-inch SAS/SATA SSDs • 122.88TB using 16x 7.68TB 2.5-inch NVMe SSDs • 38.4TB using 16x 2.4TB 2.5-inch HDDs

Storage controller	• No embedded RAID
	• 12 Gb SAS/SATA RAID adapters:
	  ◦ RAID 530i (cacheless) supports RAID 0, 1, 10, 5, 50
	  ◦ RAID 730-8i with 1GB cache supports RAID 0, 1, 10, 5, 50
	  ◦ RAID 730-8i with 2GB flash-backed cache supports RAID 0, 1, 10, 5, 50, 6, 60
	  ◦ RAID 930-8i or 940-8i with 2GB flash-backed cache supports RAID 0, 1, 10, 5, 50, 6, 60
	  ◦ RAID 930-16i or 940-16i with 4GB or 8GB flash-backed cache supports RAID 0, 1, 10, 5, 50, 6, 60
	• 12 Gb SAS/SATA non-RAID:
	  ◦ 430-8i or 440-8i HBAs
	  ◦ 430-16i or 440-16i HBAs

Optical drive bays	No internal optical drive.
Tape drive bays	No internal backup drive.

Components	Specification
Network interfaces	Integrated 10Gb Ethernet controller, based on the Intel Ethernet Connection X722. The server supports 1 of 6 available Phy adapters, providing either 2- or 4-port Gigabit Ethernet, 2- or 4-port 10 GbE with SFP+ connections or 2- or 4-port 10 GbE with RJ45 connections. One port can optionally be shared with the XClarity Controller (XCC) management processor for Wake-on-LAN and NC-SI support.
PCI Expansion slots	Up to eight PCIe slots plus a slot reserved for a LOM Ethernet adapter, plus a slot for the M.2 adapter. Five slots plus the LOM slot are on the system board and three (slots 3-5) are through a riser card. Four riser cards are available. The slots are as follows: • Slot 1: PCIe 3.0 x16 (low profile) • Slot 2: PCIe 3.0 x8 (low profile) • Slot 3-5: Riser card slots (choices are x8/x8/x8, x8/x8/x8ML2 and x8/x16ML2) • Slot 6: PCIe 2.0 x2 / 6 Gb SATA slot reserved for M.2 adapter and drives • Slot 7: Reserved for Ethernet LOM phy adapter • Slot 8: PCIe 3.0 x8 (low profile) • Slot 10: PCIe 3.0 x16 (low profile) • Slot 11: PCIe 3.0 x16 (low profile) **Tip**: There is no slot 9 in this server.
Ports	Front: Two USB 2.0 ports or one USB 2.0 and one USB 3.0 port, model dependent. The first USB 2.0 port can be configured to support local systems management by using the XClarity Administrator mobile app on a mobile device connected via a USB cable. Optional front VGA video port (CTO or field upgrade). Rear: Two USB 3.0 ports, one VGA video port, one DB-9 serial port, and one RJ-45 XClarity Controller (XCC) systems management port. The serial port can be shared with the XCC for serial redirection functions. Internal: Optional M.2 adapter in dedicated slot supporting one or two M.2 drives (for OS boot support, including hypervisor support).
Cooling	Six N+1 redundant hot swap 60 mm fans (all six standard). One fan integrated in each power supply.
Power supply	Up to two hot-swap redundant AC power supplies (all 80 PLUS Platinum certification): 750 W, 1100 W, 1600 W and 2000 W AC options, supporting 220 V AC. 750 W and 1100 W options also support 110V input supply. In China only, all power supply options support 240 V DC.
Video	G200 graphics with 16 MB memory with 2D hardware accelerator, integrated into the XClarity Controller. Maximum resolution is 1920x1200 32bpp at 60Hz.
Hot-swap parts	Drives, power supplies, and fans.
Systems management	XClarity Controller embedded management, XClarity Administrator centralized infrastructure delivery, XClarity Integrator plugins, and XClarity Energy Manager centralized server power management. XClarity Controller Advanced standard with the SR850P; XClarity Controller Enterprise optional with software license upgrade. Light path diagnostics for local failure detection and reporting, with optional LCD diagnostics pull-out panel.
Security features	Power-on password, administrator's password, Trusted Platform Module (TPM), supporting TPM 1.2 or TPM 2.0. In China only, optional Trusted Cryptographic Module (TCM). Lockable top cover. Optional lockable front security bezel.
Operating systems supported	Microsoft Windows Server, Red Hat Enterprise Linux, SUSE Linux Enterprise Server, VMware ESXi. See the Operating systems section for specifics.
Limited warranty	Three-year or one-year (model dependent) customer-replaceable unit and onsite limited warranty with 9x5 next business day (NBD).

Components	Specification
Service and support	Optional service upgrades are available through Lenovo Services: 4-hour or 2-hour response time, 6-hour fix time, 1-year or 2-year warranty extension, software support for Lenovo hardware and some third-party applications.
Dimensions	Width: 445 mm (17.5 in.), height: 87 mm (3.4 in.), depth: 765 mm (30.1 in.). SeePhysical and electrical specifications for details.
Weight	Minimum configuration: 18 kg (40 lb.), maximum: 27 kg (59.6 lb)

Models

models can be configured by using the Lenovo Data Center Solution Configurator (DCSC).

Configure-to-order (CTO) models are used to create models with factory-integrated server customizations. For CTO models, two base CTO models are available for the SR850P as listed in the following table, CTO1WW and CTOLWW:

- The CTO1WW base CTO model is for general business and is selectable by choosing **General Purpose** mode in DCSC.
- The CTOLWW base model is intended for High Performance Computing (HPC) and Artificial Intelligence (AI) configurations and solutions, including configurations for Lenovo Scalable Infrastructure (LeSI), and is enabled using either the **HPC & AI LeSI Solutions** mode or **HPC & AI Hardware** mode in DCSC. CTOLWW configurations can also be built using System x and Cluster Solutions Configurator (x-config).

Preconfigured server models may also be available for the SR850P, however these are region-specific; that is, each region may define their own server models, and not all server models are available in every region.

The following table lists the base CTO models of the server.

Table 2. Base CTO models

Machine Type/Model General purpose	Machine Type/Model for HPC and AI	Description
7D2GCTO1WW	7D2GCTOLWW	– 3-year Warranty
7D2FCTO1WW	7D2FCTOLWW	– 1-year Warranty
7D2HCTO2WW	7D2HCTOLWW	– SAP HANA configurations with 3-year warranty

The following tables list the available models, grouped by region.

- Models for Australia and New Zealand
- Models for South East Asian regions (ASEAN)
- Models for EMEA regions
- Models for Hong Kong, Taiwan, Korea (HTK)
- Models for India
- Models for Japan

All models have the following common features:

- No included drives (open drive bays)
- No power cords included; ensure desired power cords are added to the order
- No cable management arm is included however it is available as an option

Models for Australia and New Zealand

Table 3. Models for Australia and New Zealand

Model	Intel Xeon processors†	Memory	RAID	Drive bays	Ethernet LOM	Slots	Power supplies	Front USB 3.0	LCD panel	Front VGA	XCC Level	Rail kit
TopSeller models												
7D2GA004AU	4x Gold 6230 20C 125W 2.1GHz	4x 32GB 2933	930-16i	16x 2.5" / 16	4x1Gb	8 / 8 (x8 riser)	2x 2000W HS	Yes	Yes	Yes	Ent	Slide
7D2GA005AU	4x Gold 6242 16C 150W 2.8GHz	4x 32GB 2933	930-16i	16x 2.5" / 16	4x1Gb	8 / 8 (x8 riser)	2x 2000W HS	Yes	Yes	Yes	Ent	Slide
7D2GA006AU	4x Gold 6252 24C 150W 2.1GHz	4x 32GB 2933	930-16i	16x 2.5" / 16	4x1Gb	8 / 8 (x8 riser)	2x 2000W HS	Yes	Yes	Yes	Ent	Slide
7D2GA007AU	4x Platinum 8260 24C 165W 2.4GHz	4x 32GB 2933	930-16i	16x 2.5" / 16	4x1Gb	8 / 8 (x8 riser)	2x 2000W HS	Yes	Yes	Yes	Ent	Slide

† Processor detail: Quantity, model, core count, TDP, core frequency

Models for South East Asian regions (ASEAN)

Table 4. Models for South East Asian regions (ASEAN)

Model	Intel Xeon processors†	Memory	RAID	Drive bays	Ethernet LOM	Slots	Power supplies	Front USB 3.0	LCD panel	Front VGA	XCC Level	Rail kit
TopSeller models												
7D2GA008SG	4x Gold 6230 20C 125W 2.1GHz	4x 32GB 2933	930-16i	16x 2.5" / 16	4x1Gb	8 / 8 (x8 riser)	2x 2000W HS	Yes	Yes	Yes	Ent	Slide
7D2GA009SG	4x Gold 6242 16C 150W 2.8GHz	4x 32GB 2933	930-16i	16x 2.5" / 16	4x1Gb	8 / 8 (x8 riser)	2x 2000W HS	Yes	Yes	Yes	Ent	Slide
7D2GA00ASG	4x Gold 6252 24C 150W 2.1GHz	4x 32GB 2933	930-16i	16x 2.5" / 16	4x1Gb	8 / 8 (x8 riser)	2x 2000W HS	Yes	Yes	Yes	Ent	Slide
7D2GA00BSG	4x Platinum 8260 24C 165W 2.4GHz	4x 32GB 2933	930-16i	16x 2.5" / 16	4x1Gb	8 / 8 (x8 riser)	2x 2000W HS	Yes	Yes	Yes	Ent	Slide

† Processor detail: Quantity, model, core count, TDP, core frequency

Models for EMEA regions

Table 5. Models for EMEA regions

Model	Intel Xeon processors†	Memory	RAID	Drive bays	Ethernet LOM	Slots	Power supplies	Front USB 3.0	LCD panel	Front VGA	XCC Level	Rail kit
Standard models												
7D2GA00KEA	4x Gold 6230 20C 125W 2.1GHz	4x 32GB 2933	930-8i	8x 2.5" / 16 (4x AnyBay)	Optional	7 / 7 (x16 riser)	2x 1100W HS	Yes	Yes	Option	Ent	Slide

† Processor detail: Quantity, model, core count, TDP, core frequency

Models for Hong Kong, Taiwan, Korea (HTK)

Table 6. Models for Hong Kong, Taiwan, Korea (HTK)

Model	Intel Xeon processors†	Memory	RAID	Drive bays	Ethernet LOM	Slots	Power supplies	Front USB 3.0	LCD panel	Front VGA	XCC Level	Rail kit
TopSeller models												
7D2GA00CCN	4x Gold 6230 20C 125W 2.1GHz	4x 32GB 2933	930-16i	16x 2.5" / 16	4x1Gb	8 / 8 (x8 riser)	2x 2000W HS	Yes	Yes	Yes	Ent	Slide
7D2GA00DCN	4x Gold 6242 16C 150W 2.8GHz	4x 32GB 2933	930-16i	16x 2.5" / 16	4x1Gb	8 / 8 (x8 riser)	2x 2000W HS	Yes	Yes	Yes	Ent	Slide
7D2GA00ECN	4x Gold 6252 24C 150W 2.1GHz	4x 32GB 2933	930-16i	16x 2.5" / 16	4x1Gb	8 / 8 (x8 riser)	2x 2000W HS	Yes	Yes	Yes	Ent	Slide
7D2GA00FCN	4x Platinum 8260 24C 165W 2.4GHz	4x 32GB 2933	930-16i	16x 2.5" / 16	4x1Gb	8 / 8 (x8 riser)	2x 2000W HS	Yes	Yes	Yes	Ent	Slide

† Processor detail: Quantity, model, core count, TDP, core frequency

Models for India

Table 7. Models for India

Model	Intel Xeon processors†	Memory	RAID	Drive bays	Ethernet LOM	Slots	Power supplies	Front USB 3.0	LCD panel	Front VGA	XCC Level	Rail kit
TopSeller models												
7D2GA003SG	4x Gold 6230 20C 125W 2.1GHz	4x 32GB 2933	930-16i	16x 2.5" / 16	4x1Gb	8 / 8 (x8 riser)	2x 2000W HS	Yes	Yes	Yes	Ent	Slide
7D2GA002SG	4x Gold 6242 16C 150W 2.8GHz	4x 32GB 2933	930-16i	16x 2.5" / 16	4x1Gb	8 / 8 (x8 riser)	2x 2000W HS	Yes	Yes	Yes	Ent	Slide
7D2GA000SG	4x Gold 6252 24C 150W 2.1GHz	4x 32GB 2933	930-16i	16x 2.5" / 16	4x1Gb	8 / 8 (x8 riser)	2x 2000W HS	Yes	Yes	Yes	Ent	Slide
7D2GA001SG	4x Platinum 8260 24C 165W 2.4GHz	4x 32GB 2933	930-16i	16x 2.5" / 16	4x1Gb	8 / 8 (x8 riser)	2x 2000W HS	Yes	Yes	Yes	Ent	Slide

† Processor detail: Quantity, model, core count, TDP, core frequency

Models for Japan

Table 8. Models for Japan

Model	Intel Xeon processors†	Memory	RAID	Drive bays	Ethernet LOM	Slots	Power supplies	Front USB 3.0	LCD panel	Front VGA	XCC Level	Rail kit
Standard models												
7D2GA00JJP	4x Gold 6234 8C 130W 3.3GHz	4x 32GB 2933	Optional	Optional	4x10Gb RJ45	8 / 8 (x8 riser)	2x 2000W HS	Yes	Yes	Yes	Ent	Slide
7D2GA00HJP	4x Gold 6246 12C 165W 3.3GHz	4x 32GB 2933	Optional	Optional	4x10Gb RJ45	8 / 8 (x8 riser)	2x 2000W HS	Yes	Yes	Yes	Ent	Slide
7D2GA00GJP	4x Gold 6254 18C 200W 3.1GHz	4x 32GB 2933	Optional	Optional	4x10Gb RJ45	8 / 8 (x8 riser)	2x 2000W HS	Yes	Yes	Yes	Ent	Slide

† Processor detail: Quantity, model, core count, TDP, core frequency

Processor options

The SR850P supports Gold and Platinum level processors in the second-generation Intel Xeon Processor Scalable Family.

Topics in this section:

- Memory capacity of processors
- Processor features
- UEFI operating modes

The server supports four processors:

- Processors 1 and 2 are installed in sockets on the system board.
- Processors 3 and 4 are installed on the Processor and Memory Expansion Tray.

Note: Configurations of 1, 2 or 3 processors is not supported

The Processor and Memory Expansion Tray has a sliding and rolling lift mechanism that requires only a one-handed operation to insert or remove from the server. It has a toolless design for superior usability, serviceability and reliability. All models of the SR850P include the Processor and Memory Expansion Tray as standard.

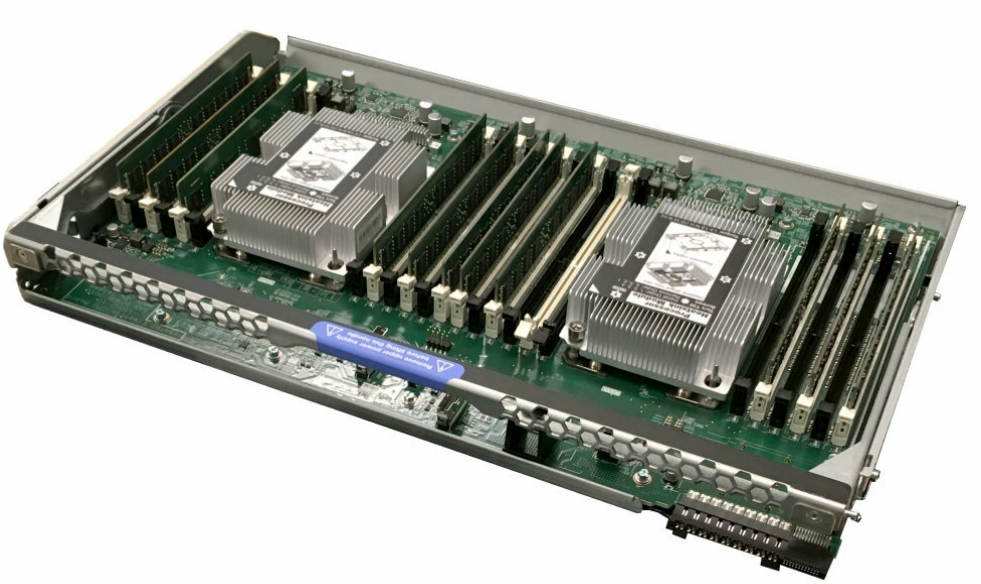

Figure 6. Processor and Memory Expansion Tray

All supported processors have the following characteristics:

- Second-generation Intel Xeon Scalable processors (formerly codenamed "Cascade Lake")
- 14 nm process technology
- Six DDR4 memory channels
- 48 PCIe 3.0 I/O lanes
- 1 MB L2 cache
- 1.375 MB or more L3 cache per core
- Intel Hyper-Threading Technology
- Intel Turbo Boost Technology 2.0
- Intel Advanced Vector Extensions 512 (AVX-512)
- Intel Ultra Path Interconnect (UPI) links at 10.4 GT/s (replaces QPI)

Some processors include a suffix letter in the processor model number:

- L: Large memory tier (supports total memory up to 4.5TB per processor)

- M: Medium memory tier (supports total memory up to 2TB per processor)
- N: NFV optimized
- S: Search optimized
- T: High Tcase
- U: Single socket
- V: VM Density optimized
- Y: Speed Select

Processors without a suffix support up to 1TB per processor.

The four processors are connected together using a mesh topology. A mesh topology allows all four processors to be connected together which improves the performance of processor-to-processor communications. The following figure shows how a mesh topology is different to the ring topology of the SR850 server.

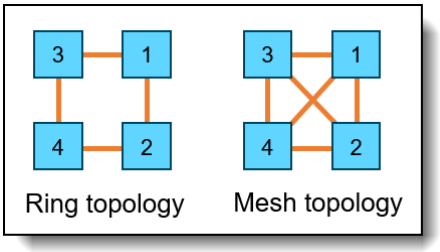

Figure 7. Ring toplogy (SR850) versus Mesh topology (SR850P)

The table below lists the supported second-generation Intel processors. The processors do not have option part numbers because all processors are included in the standard models (see the Models section) or in CTO orders.

Gold 5200 processors: The SR850P supports Intel Xeon Gold 5200 Series processors, however these processors only have two UPI links and therefore do not support a mesh topology. The value of the SR850P in such a configuration is the availability of two extra x16 slots over what the SR850 offers.

Table 10. Processor options for the SR850P

Feature code	Description
B4HN	Intel Xeon Gold 5215 10C 85W 2.5GHz Processor
B4P9	Intel Xeon Gold 5215L 10C 85W 2.5GHz Processor
B4HM	Intel Xeon Gold 5217 8C 115W 3.0GHz Processor
B4HL	Intel Xeon Gold 5218 16C 125W 2.3GHz Processor
B6BS	Intel Xeon Gold 5218B 16C 125W 2.3GHz Processor
B4P3	Intel Xeon Gold 5218T 16C 105W 2.1GHz Processor
B4HK	Intel Xeon Gold 5220 18C 125W 2.2GHz Processor
B6CW	Intel Xeon Gold 5220S 18C 125W 2.7GHz Processor
B6CQ	Intel Xeon Gold 5220T 18C 105W 1.9GHz Processor
B5S1	Intel Xeon Gold 5222 4C 105W 3.8GHz Processor
B6CV	Intel Xeon Gold 6222V 20C 115W 1.8GHz Processor
B6CL	Intel Xeon Gold 6226 12C 125W 2.7GHz Processor
B4HJ	Intel Xeon Gold 6230 20C 125W 2.1GHz Processor
B5RY	Intel Xeon Gold 6230N 20C 125W 2.3GHz Processor
B6CP	Intel Xeon Gold 6230T 20C 125W 2.1GHz Processor
B6CK	Intel Xeon Gold 6234 8C 130W 3.3GHz Processor

Feature code	Description
B6CJ	Intel Xeon Gold 6238 22C 140W 2.1GHz Processor
B6CR	Intel Xeon Gold 6238L 22C 140W 2.1GHz Processor
B4P2	Intel Xeon Gold 6238T 22C 125W 1.9GHz Processor
B4HH	Intel Xeon Gold 6240 18C 150W 2.6GHz Processor
B6CS	Intel Xeon Gold 6240L 18C 150W 2.6GHz Processor
B4NV	Intel Xeon Gold 6240Y 18/14/8C 150W 2.6GHz Processor
B4HG	Intel Xeon Gold 6242 16C 150W 2.8GHz Processor
B4HF	Intel Xeon Gold 6244 8C 150W 3.6GHz Processor
B6PD	Intel Xeon Gold 6246 12C 165W 3.3GHz Processor
B4HE	Intel Xeon Gold 6248 20C 150W 2.5GHz Processor
B4HC	Intel Xeon Gold 6252 24C 150W 2.1GHz Processor
B6CT	Intel Xeon Gold 6252N 24C 150W 2.3GHz Processor
B4HD	Intel Xeon Gold 6254 18C 200W 3.1GHz Processor
B6CU	Intel Xeon Gold 6262V 24C 135W 1.9GHz Processor
B5RZ	Intel Xeon Platinum 8253 16C 125W 2.2GHz Processor
B5S2	Intel Xeon Platinum 8256 4C 105W 3.8GHz Processor
B4HB	Intel Xeon Platinum 8260 24C 165W 2.4GHz Processor
B4P7	Intel Xeon Platinum 8260L 24C 165W 2.4GHz Processor
B4NU	Intel Xeon Platinum 8260Y 24/20/16C 165W 2.4GHz Processor
B4HA	Intel Xeon Platinum 8268 24C 205W 2.9GHz Processor
B4H9	Intel Xeon Platinum 8270 26C 205W 2.7GHz Processor
B4H8	Intel Xeon Platinum 8276 28C 165W 2.2GHz Processor
B4P6	Intel Xeon Platinum 8276L 28C 165W 2.2GHz Processor
B4H7	Intel Xeon Platinum 8280 28C 205W 2.7GHz Processor
B4P5	Intel Xeon Platinum 8280L 28C 205W 2.7GHz Processor

Memory capacity of processors

Second-generation Xeon Scalable processors are limited to the amount of memory they can address, as follows:

- Processors with an L suffix (eg 8260L): Up to 4.5 TB per processor
- Processors with an M suffix (eg 8260M): Up to 2 TB per processor
- All other processors: Up to 1 TB per processor

The calculation of the total memory per processor includes both the system memory DIMMs and the Persistent Memory DCPMMs installed in the server.

For example:

- A configuration using 12x 64GB DIMMs per processor is a total of 768 GB, which means that neither an M nor an L processor is required
- A configuration using 12x 128GB DIMMs per processor is a total of 1.5 TB, which means that an M processor is required
- A configuration using 6x 32GB DIMMs + 6x 256GB DCPMMs is a total of 1.69 TB which means an M processor is required (an L processor may also be used)
- A configuration using 6x 128GB DIMMs + 6x 512GB DCPMMs is a total of 3.75 TB which means an L processor is required

Processor features

The following table lists the features of the supported second-generation Intel Xeon processors.

Abbreviations used in the table:

- UPI: Ultra Path Interconnect
- TDP: Thermal Design Power
- FMA: Number of Intel AVX-512 Fused-Multiply Add (FMA) units
- HT: Hyper-Threading
- TB: Turbo Boost 2.0
- VT: Virtualization Technology (includes VT-x and VT-d)
- SST-PP: Speed Select Technology - Performance Profile
- DCPMM: DC Persistent Memory Module support
- RAS: Reliability, Availability, and Serviceability: Std = Standard, Adv = Advanced

The processors that support SST-PP offer three distinct operating points that are defined by a core count with a base speed associated with that core count. The operating point is selected during the boot process and cannot be changed at runtime.

Table 11. Processor specifications

CPU model	Cores / threads	Core speed (Base / TB max)	L3 cache*	Max memory speed	Max memory per CPU	UPI links & speed†	FMA units	TDP	HT	TB	VT	SST-PP	DCPMM	RAS
Intel Xeon 5200 (Gold) processors (these processors do not support the a mesh topology)														
5215	10 / 20	2.5 / 3.4 GHz	13.75 MB	2666 MHz	1 TB	2, 10.4 GT/s	1	85 W	Y	Y	Y	N	Y	Adv
5215L	10 / 20	2.5 / 3.4 GHz	13.75 MB	2666 MHz	4.5 TB	2, 10.4 GT/s	1	85 W	Y	Y	Y	N	Y	Adv
5217	8 / 16	3.0 / 3.7 GHz	11 MB	2666 MHz	1 TB	2, 10.4 GT/s	1	115 W	Y	Y	Y	N	Y	Adv
5218**	16 / 32	2.3 / 3.9 GHz	22 MB	2666 MHz	1 TB	2, 10.4 GT/s	1	125 W	Y	Y	Y	N	Y	Adv
5218B**	16 / 32	2.3 / 3.9 GHz	22 MB	2666 MHz	1 TB	2, 10.4 GT/s	1	125 W	Y	Y	Y	N	Y	Adv
5218T	16 / 32	2.1 / 3.9 GHz	22 MB	2666 MHz	1 TB	2, 10.4 GT/s	1	105 W	Y	Y	Y	N	Y	Adv
5220	18 / 36	2.2 / 3.9 GHz	24.75 MB	2666 MHz	1 TB	2, 10.4 GT/s	1	125 W	Y	Y	Y	N	Y	Adv
5220S	18 / 36	2.7 / 3.9 GHz	24.75 MB	2666 MHz	1 TB	2, 10.4 GT/s	1	125 W	Y	Y	Y	N	Y	Adv
5220T	18 / 36	1.9 / 3.9 GHz	24.75 MB	2666 MHz	1 TB	2, 10.4 GT/s	1	105 W	Y	Y	Y	N	Y	Adv
5222	4 / 8	3.8 / 3.9 GHz	16.5 MB*	2933 MHz	1 TB	2, 10.4 GT/s	2	105 W	Y	Y	Y	N	Y	Adv
Intel Xeon 6200 (Gold) processors														
6222V	20 / 40	1.8 / 3.6 GHz	27.5 MB	2400 MHz	1 TB	3, 10.4 GT/s	2	115 W	Y	Y	Y	N	Y	Adv
6226	12 / 24	2.7 / 3.7 GHz	19.25 MB*	2933 MHz	1 TB	3, 10.4 GT/s	2	125 W	Y	Y	Y	N	Y	Adv
6230	20 / 40	2.1 / 3.9 GHz	27.5 MB	2933 MHz	1 TB	3, 10.4 GT/s	2	125 W	Y	Y	Y	N	Y	Adv
6230N	20 / 40	2.3 / 3.9 GHz	27.5 MB	2933 MHz	1 TB	3, 10.4 GT/s	2	125 W	Y	Y	Y	N	Y	Adv
6230T	20 / 40	2.1 / 3.9 GHz	27.5 MB	2933 MHz	1 TB	3, 10.4 GT/s	2	125 W	Y	Y	Y	N	Y	Adv
6234	8 / 16	3.3 / 4.0 GHz	24.75 MB	2933 MHz	1 TB	3, 10.4 GT/s	2	130 W	Y	Y	Y	N	Y	Adv

CPU model	Cores / threads	Core speed (Base / TB max)	L3 cache*	Max memory speed	Max memory per CPU	UPI links & speed†	FMA units	TDP	HT	TB	VT	SST-PP	DCPMM	RAS
6238	22 / 44	2.1 / 3.7 GHz	30.25 MB	2933 MHz	1 TB	3, 10.4 GT/s	2	140 W	Y	Y	Y	N	Y	Adv
6238L	22 / 44	2.1 / 3.7 GHz	30.25 MB	2933 MHz	4.5 TB	3, 10.4 GT/s	2	140 W	Y	Y	Y	N	Y	Adv
6238T	22 / 44	1.9 / 3.7 GHz	30.25 MB	2933 MHz	1 TB	3, 10.4 GT/s	2	125 W	Y	Y	Y	N	Y	Adv
6240	18 / 36	2.6 / 3.9 GHz	24.75 MB	2933 MHz	1 TB	3, 10.4 GT/s	2	150 W	Y	Y	Y	N	Y	Adv
6240L	18 / 36	2.6 / 3.9 GHz	24.75 MB	2933 MHz	4.5 TB	3, 10.4 GT/s	2	150 W	Y	Y	Y	N	Y	Adv
6240Y	18 / 36	2.6 / 3.9 GHz	24.75 MB	2933 MHz	1 TB	3, 10.4 GT/s	2	150 W	Y	Y	Y	Y	Y	Adv
	14 / 28	2.8 / 3.9 GHz												
	8 / 16	3.1 / 3.9 GHz												
6242	16 / 32	2.8 / 3.9 GHz	22 MB	2933 MHz	1 TB	3, 10.4 GT/s	2	150 W	Y	Y	Y	N	Y	Adv
6244	8 / 16	3.6 / 4.4 GHz	24.75 MB*	2933 MHz	1 TB	3, 10.4 GT/s	2	150 W	Y	Y	Y	N	Y	Adv
6246	12 / 24	3.3 / 3.9 GHz	24.75 MB*	2933 MHz	1 TB	3, 10.4 GT/s	2	165 W	Y	Y	Y	N	Y	Adv
6248	20 / 40	2.5 / 3.9 GHz	27.5 MB	2933 MHz	1 TB	3, 10.4 GT/s	2	150 W	Y	Y	Y	N	Y	Adv
6252	24 / 48	2.1 / 3.7 GHz	35.75 MB*	2933 MHz	1 TB	3, 10.4 GT/s	2	150 W	Y	Y	Y	N	Y	Adv
6252N	24 / 48	2.3 / 3.6 GHz	33 MB	2933 MHz	1 TB	3, 10.4 GT/s	2	150 W	Y	Y	Y	N	Y	Adv
6254	18 / 36	3.1 / 4.0 GHz	24.75 MB	2933 MHz	1 TB	3, 10.4 GT/s	2	200 W	Y	Y	Y	N	Y	Adv
6262V	24 / 48	1.9 / 3.6 GHz	33 MB	2400 MHz	1 TB	3, 10.4 GT/s	2	135 W	Y	Y	Y	N	Y	Adv
Intel Xeon 8200 (Platinum) processors														
8253	16 / 32	2.2 / 3.0 GHz	22 MB	2933 MHz	1 TB	3, 10.4 GT/s	2	125 W	Y	Y	Y	N	Y	Adv
8256	4 / 8	3.8 / 3.9 GHz	16.5 MB*	2933 MHz	1 TB	3, 10.4 GT/s	2	105 W	Y	Y	Y	N	Y	Adv
8260	24 / 48	2.4 / 3.9 GHz	35.75 MB*	2933 MHz	1 TB	3, 10.4 GT/s	2	165 W	Y	Y	Y	N	Y	Adv
8260L	24 / 48	2.4 / 3.9 GHz	35.75 MB*	2933 MHz	4.5 TB	3, 10.4 GT/s	2	165 W	Y	Y	Y	N	Y	Adv
8260Y	24 / 48	2.4 / 3.9 GHz	35.75 MB*	2933 MHz	1 TB	3, 10.4 GT/s	2	165 W	Y	Y	Y	Y	Y	Adv
	20 / 40	2.5 / 3.9 GHz												
	16 / 32	2.7 / 3.9 GHz												
8268	24 / 48	2.9 / 3.9 GHz	35.75 MB*	2933 MHz	1 TB	3, 10.4 GT/s	2	205 W	Y	Y	Y	N	Y	Adv
8270	26 / 52	2.7 / 4.0 GHz	35.75 MB	2933 MHz	1 TB	3, 10.4 GT/s	2	205 W	Y	Y	Y	N	Y	Adv
8276	28 / 56	2.2 / 4.0 GHz	38.5 MB	2933 MHz	1 TB	3, 10.4 GT/s	2	165 W	Y	Y	Y	N	Y	Adv
8276L	28 / 56	2.2 / 4.0 GHz	38.5 MB	2933 MHz	4.5 TB	3, 10.4 GT/s	2	165 W	Y	Y	Y	N	Y	Adv
8280	28 / 56	2.7 / 4.0 GHz	38.5 MB	2933 MHz	1 TB	3, 10.4 GT/s	2	205 W	Y	Y	Y	N	Y	Adv
8280L	28 / 56	2.7 / 4.0 GHz	38.5 MB	2933 MHz	4.5 TB	3, 10.4 GT/s	2	205 W	Y	Y	Y	N	Y	Adv

* L3 cache is 1.375 MB per core or larger. Processors with a larger L3 cache per core are marked with an *
† To support a 4-processor mesh topology, select a processor with 3 UPI links. Processors with only 2 UPI links (Gold 5200 Series) only support a ring topology
** The Intel Xeon Gold 5218 and 5218B processors have similar specifications; however, they use different silicon designs and cannot be mixed in the same system.

UEFI operating modes

The SR850P offers preset operating modes that affect energy consumption and performance. These modes are a collection of predefined low-level UEFI settings that simplify the task of tuning the server to suit your business and workload requirements.

The following table lists the feature codes that allow you to specify the mode you wish to preset in the factory for CTO orders.

Table 12. UEFI operating mode presets in DCSC

Feature code	Description
BFYB	Operating mode selection for: "Maximum Performance Mode"
BFYC	Operating mode selection for: "Minimal Power Mode"
BFYD	Operating mode selection for: "Efficiency Favoring Power Savings Mode"
BFYE	Operating mode selection for: "Efficiency - Favoring Performance Mode"

The preset modes for the SR850P are as follows:

- **Maximum Performance Mode** (feature BFYB): Achieves maximum performance but with higher power consumption and lower energy efficiency.
- **Minimal Power Mode** (feature BFYC): Minimize the absolute power consumption of the system.
- **Efficiency Favoring Power Savings Mode** (feature BFYD): Maximize the performance/watt efficiency with a bias towards power savings. This is the favored mode for SPECpower benchmark testing, for example.
- **Efficiency Favoring Performance Mode** (feature BFYE): Maximize the performance/watt efficiency with a bias towards performance. This is the favored mode for Energy Star certification, for example.

For details about these preset modes, and all other performance and power efficiency UEFI settings offered in the SR850P, see the paper "Tuning UEFI Settings for Performance and Energy Efficiency on Intel Xeon Scalable Processor-Based ThinkSystem Servers", available from https://lenovopress.lenovo.com/lp1477.

Memory options

The SR850P with second-generation Intel Xeon Scalable processors uses Lenovo TruDDR4 memory operating at up to 2933 MHz. The server supports 12 DIMMs per processor, which corresponds to 48 DIMMs with four processors installed. Each processor has six memory channels with two DIMMs per channel.

With 128 GB 3DS RDIMMs installed, a 4-socket server supports a total of 6 TB of system memory.

The SR850P with second-generation Intel Xeon Scalable processors also supports Intel Optane DC Persistent Memory, as described in the Persistent Memory section.

With second-generation processors, the server supports these memory DIMMs:

- 2666 MHz DIMMs, that operate at 2666 MHz both at 1 DIMM per channel and 2 DIMMs per channel
- 2933 MHz DIMMs, that operate at 2933 MHz at 1 DIMM per channel, and at 2666 MHz at 2 DIMMs per channel
- 2933 MHz Performance+ DIMMs, that operate at 2933 MHz both at 1 DIMM per channel and 2 DIMMs per channel

Note that if the processor selected has a memory bus speed of 2666 MHz, then all DIMMs will operate at 2666 MHz, even if the DIMMs are rated for 2933 MHz.

The following three tables lists the memory options that are available for the server.

Lenovo TruDDR4 memory uses the highest quality components that are sourced from Tier 1 DRAM suppliers and only memory that meets the strict requirements of Lenovo is selected. It is compatibility tested and tuned to maximize performance and reliability. From a service and support standpoint, Lenovo TruDDR4 memory automatically assumes the system warranty, and Lenovo provides service and support worldwide.

Table 13. 2666 MHz memory options

Part number	Feature code	Description	Maximum supported
RDIMMs			
7X77A01303	AUNC	ThinkSystem 16GB TruDDR4 2666 MHz (2Rx8 1.2V) RDIMM	48 (12 per processor)
7X77A01304	AUND	ThinkSystem 32GB TruDDR4 2666 MHz (2Rx4 1.2V) RDIMM	48 (12 per processor)

Table 14. 2933 MHz memory options

Part number	Feature code	Description	Maximum supported
2933 MHz RDIMMs			
4ZC7A08706	B4H1	ThinkSystem 8GB TruDDR4 2933MHz (1Rx8 1.2V) RDIMM	48 (12 per processor)
4ZC7A08707	B4LY	ThinkSystem 16GB TruDDR4 2933 MHz (1Rx4 1.2V) RDIMM	48 (12 per processor)
4ZC7A08708	B4H2	ThinkSystem 16GB TruDDR4 2933MHz (2Rx8 1.2V) RDIMM	48 (12 per processor)
4ZC7A08709	B4H3	ThinkSystem 32GB TruDDR4 2933MHz (2Rx4 1.2V) RDIMM	48 (12 per processor)
4ZC7A08710	B4H4	ThinkSystem 64GB TruDDR4 2933MHz (2Rx4 1.2V) RDIMM	48 (12 per processor)
2933 MHz 3DS RDIMMs			
4ZC7A15113	B587	ThinkSystem 128GB TruDDR4 2933MHz (4Rx4 1.2V) 3DS RDIMM	48 (12 per processor)

Table 15. 2933 MHz Performance+ memory options

Part number	Feature code	Description	Maximum supported
2933 MHz Performance+ RDIMMs			
4X77A12184	B5N6	ThinkSystem 16GB TruDDR4 Performance+ 2933MHz (2Rx8 1.2V) RDIMM	48 (12 per processor)
4X77A12185	B5N7	ThinkSystem 32GB TruDDR4 Performance+ 2933MHz (2Rx4 1.2V) RDIMM	48 (12 per processor)
4X77A12186	B5N8	ThinkSystem 64GB TruDDR4 Performance+ 2933MHz (2Rx4 1.2V) RDIMM	48 (12 per processor)
2933 MHz Performance+ 3DS RDIMMs			
4X77A12187	B5N9	ThinkSystem 128GB TruDDR4 Performance+ 2933MHz (4Rx4 1.2V) 3DS RDIMM	48 (12 per processor)

The following rules apply when selecting the memory configuration:

- The server supports RDIMMs, LRDIMMs and 3DS RDIMMs. UDIMMs are not supported.
- Mixing RDIMMs, LRDIMMs or 3DS RDIMMs is not supported.
- Mixing x4 and x8 DIMMs is supported.
- Mixing of 2933 MHz Performance+ DIMMs with other DIMMs or Persistent Memory is not supported
- Mixing of 2666 MHz and 2933 MHz and is supported, however, all installed memory will operate at the lowest speed.

For best performance, consider the following:

- Ensure the memory installed is at least the same speed as the memory bus of the selected processor.

- Populate memory DIMMs in quantities of 6 or 12 per processor, so that all memory channels are used.
- When mixing 16 GB and 32 GB DIMMs in the same configuration, use 16GB 2Rx8 DIMMs instead of 16 GB 1Rx4 DIMMs for better performance.
- Populate memory channels so they all have the same total memory capacity.
- Ensure all memory controllers on a processor socket have the same DIMM configuration.
- All processor sockets on the same physical server should have the same DIMM configuration.

The following memory protection technologies are supported:

- ECC
- SDDC (for x4-based memory DIMMs; look for "x4" in the DIMM description)
- ADDDC (for x4-based memory DIMMs)
- Memory mirroring
- Memory rank sparing

If memory channel mirroring is used, then DIMMs must be installed in pairs or sets of three (minimum of one pair or set of three per processor), and all DIMMs in the pair or set of three must be identical in type and size. 50% of the installed capacity is available to the operating system.

If memory rank sparing is used, then a minimum of two single-rank or dual-rank DIMMs must be installed per populated channel (the DIMMs do not need to be identical). In rank sparing mode, one rank of a DIMM in each populated channel is reserved as spare memory. The largest rank in the channel will be automatically selected as the spare rank. The amount of memory available to the operating system depends on the number, capacity and rank counts of the DIMMs installed.

Persistent Memory

The SR850P server supports Intel Optane DC Persistent Memory, a new class of memory and storage technology explicitly architected for data center usage. Persistent Memory offers significantly lower latency than fetching data from SSDs, even NVMe SSDs, and offers higher capacities than system memory.

Using Lenovo ThinkSystem servers running applications that are tuned for Intel Optane DC Persistent Memory will result in lower data latency compared to solid-state drive technology. When data is stored closer to the processor on nonvolatile media, applications can see significant overall improvement in performance.

The following table lists the ordering information for the DC Persistent Memory modules (DCPMMs).

Table 16. DCPMM part numbers

Part number	Feature code	Description	Maximum supported
4ZC7A15110	B4LV	ThinkSystem 128GB TruDDR4 2666MHz (1.2V) Intel Optane DC Persistent Memory	24 (6 per processor)
4ZC7A15111	B4LW	ThinkSystem 256GB TruDDR4 2666MHz (1.2V) Intel Optane DC Persistent Memory	24 (6 per processor)
4ZC7A15112	B4LX	ThinkSystem 512GB TruDDR4 2666MHz (1.2V) Intel Optane DC Persistent Memory	24 (6 per processor)

The following are the requirements when installing DCPMMs:

- All second generation Intel Xeon Scalable Family processors that the SR850P supports also support DCPMMs.
- All installed DCPMMs must be the same size. Mixing DCPMMs of different capacities is not supported
- Maximum 6 DCPMMs per processor (install 1 in each memory channel)
- Minimum 2 TruDDR4 DIMMs per processor (1 per memory controller)

- For Memory Mode, minimum 2 DCPMMs per processor (install 1 per memory controller)
- For App Direct Mode, mimimum 1 DCPMM installed in the server (any processor)
- When either Memory Mode or Mixed Mode is used, the ratio of memory to DCPMMs must be between 1:16 and 1:4, but the recommended ratio is 1:4 for the best performance. For example, 6x 16GB DIMMs + 2x 256GB DCPMMs is a ratio of 1:5.33. This ratio requirement does not apply to App Direct mode.
- For each memory channel with both a DCPMM and a TruDDR4 DIMM installed, the DCPMM is installed in channel slot 1 (closest) and the DIMM is installed in channel slot 0
- To maximize performance, balance all memory channels
- In configurations with DCPMMs installed, memory mirroring is supported, with two restrictions:
  - Mirroring is only enabled on the DRAM DIMMs installed in the server; The DCPMMs themselves do not support mirroring.
  - Only App Direct mode is supported. Memory mirroring cannot be enabled when DCPMMs are in Memory Mode or Mixed Mode.
- Memory sparing is not supported with DCPMMs installed

DCPMMs offer the following memory protection technologies:

- ECC
- SDDC
- DDDC
- Patrol scrubbing
- Demand scrubbing

In the App Direct mode, the DCPMMs also support memory mirroring that is performed by the processor's integrated memory controllers. Memory mirroring is not supported in Memory Mode or Mixed Mode. Memory rank sparing is not supported by DCPMMs in any mode.

For more information, see the Intel Optane DC Persistent Memory (DCPMM) product guide, https://lenovopress.com/LP1066

Internal storage

The server can support up to 16x 2.5-inch drives, SAS, SATA or NVMe, depending on the selected backplane configuration. You can mix drives in the same server, but not in the same array. Drives are all installed from the front of the server. The server also supports one or two M.2 drives, installed in an M.2 adapter.

In this section:

- Backplanes and drive bays
- Adapters and cabling
- Field upgrades
- M.2 drives
- SED encryption key management with ISKLM

Backplanes and drive bays

The SR850P supports various internal storage configurations based on the choice of backplanes:

- 8-drive SAS/SATA backplane for 8x 2.5-inch SAS or SATA drives
- 8-drive SAS/SATA+AnyBay backplane for either:
  - 8x 2.5-inch SAS or SATA drives
  - 4x 2.5-inch SAS or SATA drives + 4x 2.5-inch U.2 (NVMe) drives
- 8-drive NVMe backplane for 8x 2.5-inch NVMe drives (minimum 2 backplanes required)

For configure-to-order (CTO) configurations, ordering information for the backplanes is in the following table.

Table 17. Backplane ordering

Part number	Feature code	Description	Min / Max
7C57A03998*	AURA	ThinkSystem 2U/Tower 2.5" SATA/SAS 8-Bay Backplane Kit	1 / 2
7C57A03999*	AUR5	ThinkSystem 2U 2.5" AnyBay 8-Bay Backplane Kit	1 / 2
CTO only	B4PC	ThinkSystem 2U 2.5" NVMe 8-Bay Backplane	2 / 2

* SAS/SATA and AnyBay backplanes are also available as field upgrades to upgrade from 8 bays to 16 bays, as described in the Field upgrades section below. The NVMe backplane is only supported in a 16 bay configuration, so no upgrades are available.

Regular 2.5-inch SAS/SATA drive bays support only SAS or SATA drives, however the Lenovo AnyBay drive bay design allows a choice of SATA, SAS or NVMe drives. This design enables the flexibility to configure some of the bays with high-performance PCIe SSDs and still use the remaining bays for high-capacity HDDs, which is the ideal solution for storage tiering.

Backplane connections are as follows:

- The 8-drive SAS/SATA backplane has two SAS/SATA connectors and connects to a supported RAID controller or SAS HBA.
- The 8-drive SAS/SATA+AnyBay backplane has two SAS/SATA connectors and connects to a supported RAID controller or SAS HBA plus four PCIe connectors to connect to either two PCIe connectors on the Processor and Memory Expansion Tray (see Figure 4), or four PCIe connectors on a NVMe Switch adapter installed in a PCIe slot.
- The 8-drive NVMe backplane has four PCIe x8 connectors. Two NVMe backplanes are required (for a total of 16 drives), and are connected to one PCIe connector on the Processor and Memory Expansion Tray plus three NVMe Switch adapters installed in PCIe slots.

Six drive configurations are possible with these backplanes:

1. 8 drive bays, all SAS/SATA
2. 8 drive bays, where 4 are AnyBay
3. 16 drive bays, all SAS/SATA
4. 16 drive bays, where 4 are AnyBay
5. 16 drive bays, where 8 are AnyBay
6. 16 drive bays, where all 16 are NVMe
7. Zero drive bays without any backplanes installed

The first six configurations are shown in the following figure.

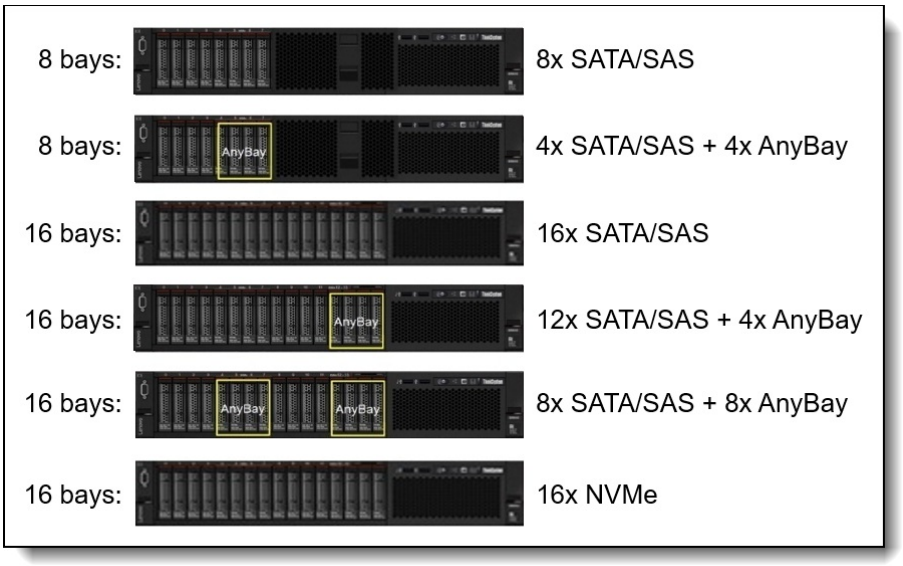

Figure 8. Drive bay configurations

Adapters and cabling

This section describes the adapter and cabling requirements for each of the configurations. There are two aspects of the server configuration that determine what adapters are needed:

- For configurations with two SAS/SATA backplanes, select a 16-port SAS/SATA adapter. If you have a configuration with one SAS/SATA backplane and wish to upgrade the server to two SAS/SATA backplanes, it is also supported to simply add a second 8-port SAS/SATA adapter.
- For AnyBay drive bays, depending on the number of AnyBay drives (4 or 8) will determine if the NVMe connections are just to the connectors on the Processor and Memory Expansion Tray or if any NVMe switch adapter is also needed.
- For configurations with NVMe backplanes, two backplanes are required. Mixing of the NVMe backplane with other backplane types is not supported. The backplanes are connected to one PCIe connector on the Processor and Memory Expansion Tray plus three NVMe Switch adapters installed in PCIe slots 1, 10 and 11.

The five drive bay configurations are shown in the subsections below. Where there are different adapter and cabling options, they are shown by the letters A and B. These configuration numbers are also later references in the Field upgrades section.

1. 8x drive bays, all SAS/SATA
2. 8x drive bays, where 4 are AnyBay
3. 16x drive bays, all SAS/SATA
4. 16x drive bays, where 4 are AnyBay
5. 16x drive bays, where 8 are AnyBay
6. 16x drive bays, where all bays are NVMe

Tip: The adapters are described in detail in the Controllers for internal storage section.

1. 8 drive bays, all SAS/SATA

In this drive bay configuration, all eight drives are connected to one 8-port SAS/SATA RAID adapter or HBA using two backplane cables, as shown in the following figure.

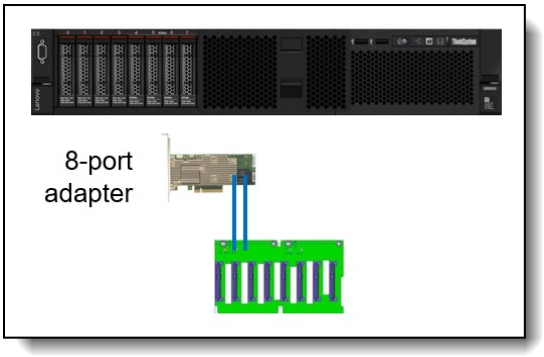

Figure 9. Config 1: Adapter and cabling for 8x drive bays, all SAS/SATA

2. 8 drive bays, where 4 are AnyBay

In 8-drive bay configurations where four of those drive bays are AnyBay drive bays, possible adapter and cabling configurations are shown in the following figure.

The NVMe ports on the Processor and Memory Expansion Tray are used to connect to the NVMe connectors on the backplane. In this configuration you can have up to eight SAS or SATA drives, or you can instead put up to four NVMe drives in the AnyBay drive bays, along with up to four SAS/SATA drives in the other drive bays.

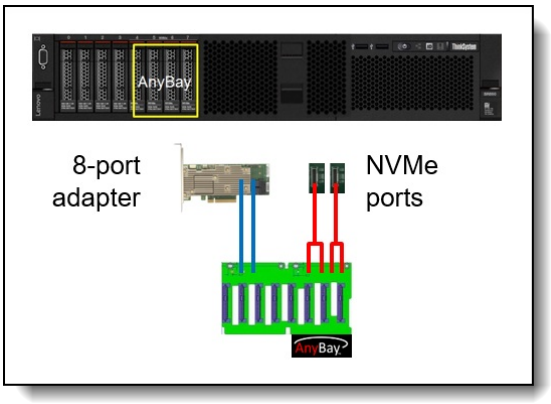

Figure 10. Config 2: Adapter and cabling for 8 drive bays, where 4 of the bays are AnyBay

3. 16 drive bays, all SAS/SATA

In 16-bay configurations where all 16 drive bays are SAS/SATA drives, the backplanes are connected to a single 16-lane adapter (config 3A). For field upgrades from an 8-bay configuration (config 1), two 8-lane adapters are supported (config 3B)

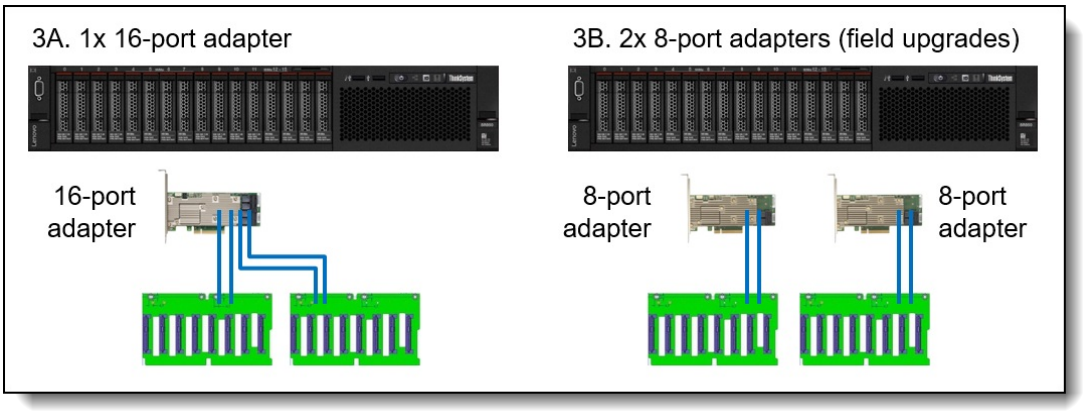

Figure 11. Config 3: Adapter and cabling for 16 drive bays, all SAS/SATA

4. 16 drive bays, where 4 are AnyBay

In 16-drive configurations where four of the bays are AnyBay drive bays, one 16-port adapter will be used for SAS/SATA connectivity and the onboard NVMe ports will be used for NVMe connections in the AnyBay bays (config 4A). For field upgrades from an 8-bay configuration (config 2), two 8-port SAS/SATA adapters can be used (config 4B).

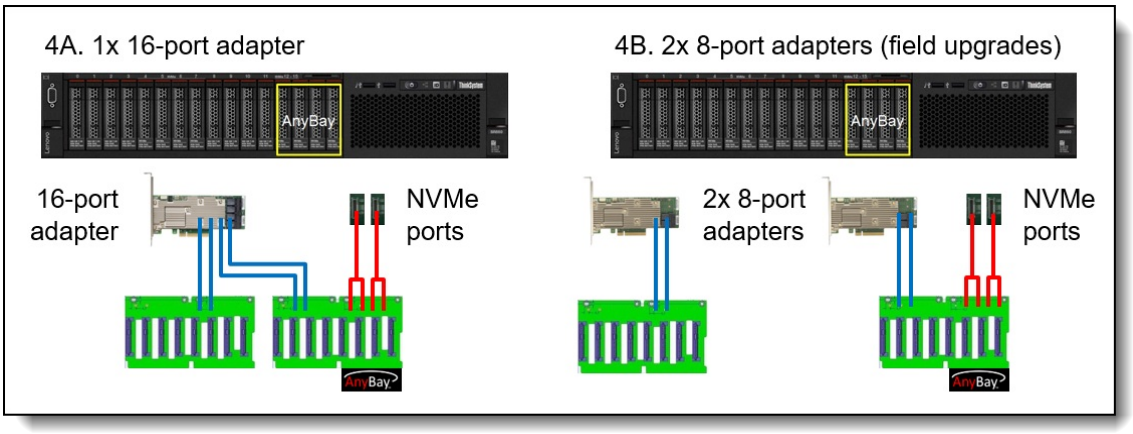

Figure 12. Config 4: Adapter and cabling for 16 drive bays, where 4 of the bays are AnyBay

5. 16 drive bays, where 8 are AnyBay

In 16-drive configurations where eight of the bays are AnyBay drive bays (config 5A), a 16-port adapter adapter for SAS/SATA connectivity.The onboard NVMe ports are used for four of the AnyBay drive bays and an NVMe Switch Adapter is needed for the other four AnyBay drive bays. For field upgrades from an 8-bay AnyBay configuration (config 2), two 8-port SAS/SATA adapter can be used (config 5B).

The configurations are shown in the following figure.

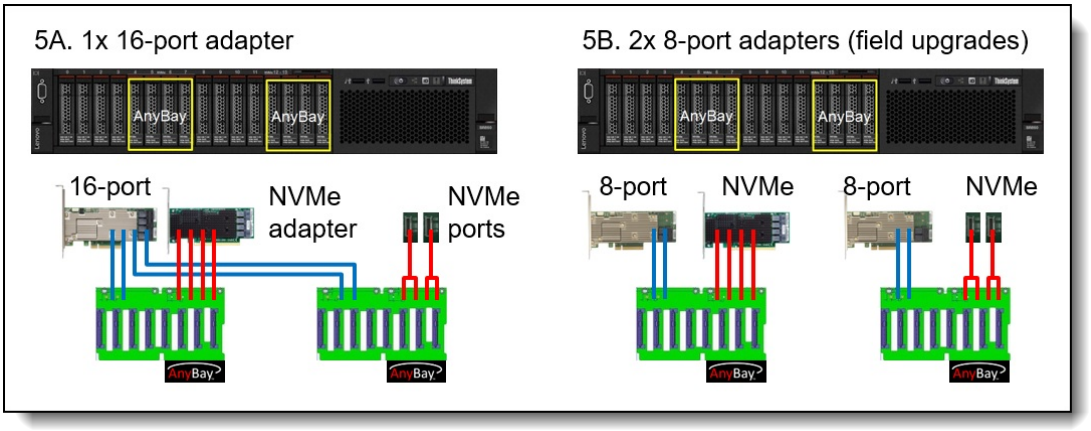

Figure 13. Config 5: Adapters and cabling for 16 drive bays, where 8 of the bays are AnyBay

6. 16x drive bays, where all are NVMe

In 16-drive configurations where all 16 drives are NVMe-only bays, three NVMe Switch Adapters are used, installed in slots 1, 10, and 11, plus one onboard NVMe port. Only configurations comprised of two NVMe backplanes are supported. No field upgrades are supported.

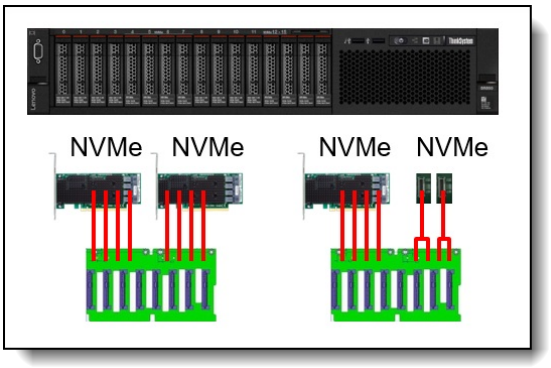

Figure 14. Config 6: Adapters and cabling for 16x NVMe drive bays

Field upgrades

This section describes how customers can upgrade their 8-bay configurations after the initial purchase of the server. The two backplane upgrade kits are listed in the following table.

The table also lists cable kits for when you already have the backplanes installed and either want to add a storage adapter or replace a storage adapter. The X30 RAID Cable Kit is for 930/730/530/430 adapters (collectively called X30 adapters) and the X40 RAID Cable Kit is for 940/440 adapters (collectively called the X40 adapters).

Table 18. Drive backplane and cable upgrades

Part number	Feature code	Description and contents
Backplane kits with cables		
7C57A03998	AXP7	ThinkSystem SR850/SR860 2.5" SATA/SAS 8-Bay BP Kit • 1x 8-bay SAS/SATA backplane • 1x backplane power cable • 2x 900mm SAS/SATA cables for X30 RAID/HBAs (SBB7A02054) • 2x 720mm SAS/SATA cables for X30 RAID/HBAs (SBB7A02052) • 1x 900mm SAS/SATA cable for X40 RAID/HBAs (SBB7A50169) • 1x 720mm SAS/SATA cable for X40 RAID/HBAs (SBB7A50168) • 8x 1-bay fillers
7C57A03999	AXP8	ThinkSystem SR850/SR860 2.5" AnyBay 8-Bay BP Kit • 1x 8-bay AnyBay backplane (4 SAS/SATA connectors, 4 AnyBay connectors) • 1x backplane power cable • 1x 900mm SAS/SATA cable for X30 RAID/HBAs (SBB7A02054) • 1x 720mm SAS/SATA cable for X30 RAID/HBAs (SBB7A02052) • 1x 900mm SAS/SATA cable for X40 RAID/HBAs (SBB7A50169) • 1x 720mm SAS/SATA cable for X40 RAID/HBAs (SBB7A50168) • 1x 750mm 4-way NVMe cable for use with NVMe Switch Adapter (SBB7A02053) • 2x 900mm NVMe cables for use with onboard NVMe ports (SBB7A01809) • 8x 1-bay fillers
Cable kits		
4X97A80367	BN9F	ThinkSystem SR860/SR860P/SR850/SR850P 2.5" SATA/SAS 8-Bay X30 RAID Cable Kit • 1x 900mm SAS/SATA cable for X30 RAID/HBAs (SBB7A02054) • 1x 720mm SAS/SATA cable for X30 RAID/HBAs (SBB7A02052)
4X97A80368	BN9G	ThinkSystem SR860/SR860P/SR850/SR850P 2.5" SATA/SAS 8-Bay X40 RAID Cable Kit • 1x 900mm SAS/SATA cable for X40 RAID/HBAs (SBB7A50169) • 1x 720mm SAS/SATA cable for X40 RAID/HBAs (SBB7A50168)

In addition to the backplane kits, you will need a RAID adapter or HBA, and for some upgrades you may also need an NVMe adapter. Upgrades needed are listed in the following two tables. Upgrading from an 8-port SAS/SATA adapter to a 16-port SAS/SATA adapter is supported, however that requires removing the existing 8-port adapter.

Tip: The adapters are described in the Controllers for internal storage section.

The following table lists the available upgrades for an SR850P with a single SAS/SATA backplane (See Configuration 1 above).

Table 19. Upgrades for servers with one 8-bay SAS/SATA backplane (Config 1)

Target configuration	Remove existing 8-port adapter	Components to add
16x bays (all SAS/SATA) with 2x 8-port adapters (Config 3B)	No	1x SAS/SATA backplane 1x 8-port adapter
	Yes	1x SAS/SATA backplane 1x 16-port adapter
16x bays (4x AnyBay) with 2x 8-port adapters (Config 4B)	No	1x AnyBay backplane 1x 8-port adapter, cables to onboard NVMe ports
	Yes	1x AnyBay backplane 1x 16-port adapter, cables to onboard NVMe ports

The following table lists the available upgrades for an SR850P with a single AnyBay backplane (See Configuration 2 above).

Table 20. Upgrades for servers with one 8-bay AnyBay backplane (Config 2)

Target configuration	Remove existing 8-port adapter	Components to add
16x bays (4x AnyBay) with 2x 8-port adapters (Config 4B)	No	1x SAS/SATA backplane 1x 8-port adapter
	Yes	1x SAS/SATA backplane 1x 16-port adapter
16x bays (8x AnyBay) with 2x 8-port adapters, 1x NVMe adapter (Config 5B)	No	1x AnyBay backplane 1x 8-port adapter, 1x NVMe adapter
	Yes	1x AnyBay backplane 1x 16-port adapter, 1x NVMe adapter

M.2 drives

The server supports one or two M.2 form-factor SATA drives for use as an operating system boot solution. With two M.2 drives configured, the drives are configured by default as a RAID-1 mirrored pair for redundancy.

The M.2 drives install into an M.2 adapter which in turn is installed in a dedicated slot on the system board. See the internal view of the server in the Components and connectors section for the location of the M.2 slot.

There are two M.2 adapters supported, as listed in the following table.

Table 21. M.2 components

Part number	Feature code	Description	Maximum supported
7Y37A01092	AUMU	ThinkSystem M.2 Enablement Kit (contains the Single M.2 Boot Adapter; supports 1 drive)	1
7Y37A01093	AUMV	ThinkSystem M.2 with Mirroring Enablement Kit (contains the Dual M.2 Boot Adapter, supports 1 or 2 drives)	1

Supported drives are listed in the Internal drive options section.

For details about M.2 components, see the *ThinkSystem M.2 Drives and M.2 Adapters* product guide: https://lenovopress.com/lp0769-thinksystem-m2-drives-adapters

SED encryption key management with ISKLM

The server supports self-encrypting drives (SEDs) as listed in the Internal drive options section. To effectively manage a large deployment of these drives in Lenovo servers, IBM Security Key Lifecycle Manager (SKLM) offers a centralized key management solution. A Lenovo Feature on Demand (FoD) upgrade is used to enable this SKLM support in the management processor of the server.

The following table lists the part numbers and feature codes for the upgrades.

Table 22. FoD upgrades for SKLM support

Part number	Feature code	Description
Security Key Lifecycle Manager - FoD (United States, Canada, Asia Pacific, and Japan)		
00D9998	A5U1	SKLM for System x/ThinkSystem w/SEDs - FoD per Install with 1 year S&S
00D9999	AS6C	SKLM for System x/ThinkSystem w/SEDs - FoD per Install with 3 year S&S
Security Key Lifecycle Manager - FoD (Latin America, Europe, Middle East, and Africa)		
00FP648	A5U1	SKLM for System x/ThinkSystem w/SEDs - FoD per Install with 1 year S&S
00FP649	AS6C	SKLM for System x/ThinkSystem w/SEDs - FoD per Install with 3 year S&S

The IBM Security Key Lifecycle Manager software is available from Lenovo using the ordering information listed in the following table.

Table 23. IBM Security Key Lifecycle Manager licenses

Part number	Description
7S0A007FWW	IBM Security Key Lifecycle Manager Basic Edition Install License + SW Subscription & Support 12 Months
7S0A007HWW	IBM Security Key Lifecycle Manager For Raw Decimal Terabyte Storage Resource Value Unit License + SW Subscription & Support 12 Months
7S0A007KWW	IBM Security Key Lifecycle Manager For Raw Decimal Petabyte Storage Resource Value Unit License + SW Subscription & Support 12 Months
7S0A007MWW	IBM Security Key Lifecycle Manager For Usable Decimal Terabyte Storage Resource Value Unit License + SW Subscription & Support 12 Months
7S0A007PWW	IBM Security Key Lifecycle Manager For Usable Decimal Petabyte Storage Resource Value Unit License + SW Subscription & Support 12 Months

Controllers for internal storage

The SR850P supports internal SAS and SATA drives with the addition of a RAID adapter or HBA. For NVMe support, the server offers two onboard NVMe ports on the processor and memory expansion tray (with four processors) and two ports with the use of an NVMe Switch Adapter.

The following table lists the adapters used for the internal storage of the SR850P server.

Table 24. Controllers for internal storage

Part number	Feature code	Description	Slots supported	Maximum supported
SAS/SATA HBA				
7Y37A01088	AUNL	ThinkSystem 430-8i SAS/SATA 12Gb HBA	8	1
7Y37A01089	AUNM	ThinkSystem 430-16i SAS/SATA 12Gb HBA	8	1
4Y37A78601	BM51	ThinkSystem 440-8i SAS/SATA PCIe Gen4 12Gb HBA	8	1
4Y37A78602	BM50	ThinkSystem 440-16i SAS/SATA PCIe Gen4 12Gb HBA	8	1
RAID adapters				
7Y37A01082	AUNG	ThinkSystem RAID 530-8i PCIe 12Gb Adapter	8	1
4Y37A78834	BMFT	ThinkSystem RAID 540-8i PCIe Gen4 12Gb Adapter	8	1
7Y37A01083†	AUNH†	ThinkSystem RAID 730-8i 1GB Cache PCIe 12Gb Adapter	8	1
4Y37A09722	B4RQ	ThinkSystem RAID 730-8i 2GB Flash PCIe 12Gb Adapter	8	1
7Y37A01084	AUNJ	ThinkSystem RAID 930-8i 2GB Flash PCIe 12Gb Adapter	8	1
7Y37A01085	AUNK	ThinkSystem RAID 930-16i 4GB Flash PCIe 12Gb Adapter	8	1
4Y37A09721	B31E	ThinkSystem RAID 930-16i 8GB Flash PCIe 12Gb Adapter	8	1
4Y37A09728	B8NY	ThinkSystem RAID 940-8i 4GB Flash PCIe Gen4 12Gb Adapter	8	1
4Y37A78600	BM35	ThinkSystem RAID 940-16i 4GB Flash PCIe Gen4 12Gb Adapter	8	1
4Y37A09730	B8NZ	ThinkSystem RAID 940-16i 8GB Flash PCIe Gen4 12Gb Adapter	8	1
NVMe adapter				
7Y37A01081	AUV2	ThinkSystem 1610-4P NVMe Switch Adapter	1, 10, 11	3

† The RAID 730-8i 1GB Cache adapter is not available in USA and Canada.

For a comparison of the functions of the supported storage adapters, see the ThinkSystem RAID Adapter and HBA Reference:
https://lenovopress.com/lp1288-thinksystem-raid-adapter-and-hba-reference#sr850p-support=SR850P

For more information about the adapters see the product guides in the RAID adapters or HBA sections of the Lenovo Press web site:
https://lenovopress.com/servers/options/raid
https://lenovopress.com/servers/options/hba

Internal drive options

The following tables list the drive options for internal storage of the server.

2.5-inch hot-swap drives:

- 2.5-inch hot-swap 12 Gb SAS HDDs
- 2.5-inch hot-swap 6 Gb SATA HDDs
- 2.5-inch hot-swap 24 Gb SAS SSDs
- 2.5-inch hot-swap 12 Gb SAS SSDs
- 2.5-inch hot-swap 6 Gb SATA SSDs
- 2.5-inch hot-swap PCIe 4.0 NVMe SSDs
- 2.5-inch hot-swap PCIe 3.0 NVMe SSDs

M.2 drives:

- M.2 SATA drives

M.2 drive support: The use of M.2 drives requires an additional adapter as described in the M.2 drives subsection.

SED support: The tables include a column to indicate which drives support SED encryption. The encryption functionality can be disabled if needed. Note: Not all SED-enabled drives have "SED" in the description.

PCIe 4.0 NVMe drive support: When installed in this server, PCIe 4.0 NVMe drives will operate at PCIe 3.0 speeds.

Table 25. 2.5-inch hot-swap 12 Gb SAS HDDs

Part number	Feature code	Description	SED support	Max Qty
2.5-inch hot-swap HDDs - 12 Gb SAS 15K				
7XB7A00021	AULV	ThinkSystem 2.5" 300GB 15K SAS 12Gb Hot Swap 512n HDD	No	16
7XB7A00022	AULW	ThinkSystem 2.5" 600GB 15K SAS 12Gb Hot Swap 512n HDD	No	16
7XB7A00023	AULX	ThinkSystem 2.5" 900GB 15K SAS 12Gb Hot Swap 512e HDD	No	16
2.5-inch hot-swap HDDs - 12 Gb SAS 10K				
7XB7A00024	AULY	ThinkSystem 2.5" 300GB 10K SAS 12Gb Hot Swap 512n HDD	No	16
7XB7A00025	AULZ	ThinkSystem 2.5" 600GB 10K SAS 12Gb Hot Swap 512n HDD	No	16
7XB7A00026	AUM0	ThinkSystem 2.5" 900GB 10K SAS 12Gb Hot Swap 512n HDD	No	16
7XB7A00027	AUM1	ThinkSystem 2.5" 1.2TB 10K SAS 12Gb Hot Swap 512n HDD	No	16
7XB7A00028	AUM2	ThinkSystem 2.5" 1.8TB 10K SAS 12Gb Hot Swap 512e HDD	No	16
7XB7A00069	B0YS	ThinkSystem 2.5" 2.4TB 10K SAS 12Gb Hot Swap 512e HDD	No	16
2.5-inch hot-swap HDDs - 12 Gb NL SAS				
7XB7A00034	AUM6	ThinkSystem 2.5" 1TB 7.2K SAS 12Gb Hot Swap 512n HDD	No	16
7XB7A00035	AUM7	ThinkSystem 2.5" 2TB 7.2K SAS 12Gb Hot Swap 512n HDD	No	16
2.5-inch hot-swap SED HDDs - 12 Gb SAS 10K				
7XB7A00031	AUM5	ThinkSystem 2.5" 600GB 10K SAS 12Gb Hot Swap 512n HDD SED	Support	16
7XB7A00033	B0YX	ThinkSystem 2.5" 1.2TB 10K SAS 12Gb Hot Swap 512n HDD SED	Support	16

Table 26. 2.5-inch hot-swap 6 Gb SATA HDDs

Part number	Feature code	Description	SED support	Max Qty
2.5-inch hot-swap HDDs - 6 Gb NL SATA				
7XB7A00036	AUUE	ThinkSystem 2.5" 1TB 7.2K SATA 6Gb Hot Swap 512n HDD	No	16
7XB7A00037	AUUJ	ThinkSystem 2.5" 2TB 7.2K SATA 6Gb Hot Swap 512e HDD	No	16

Table 27. 2.5-inch hot-swap 24 Gb SAS SSDs

Part number	Feature code	Description	SED support	Max Qty
2.5-inch hot-swap SSDs - 24 Gb SAS - Mixed Use/Mainstream (3-5 DWPD)				
4XB7A80340	BNW8	ThinkSystem 2.5" PM1655 800GB Mixed Use SAS 24Gb HS SSD	Support	16
4XB7A80341	BNW9	ThinkSystem 2.5" PM1655 1.6TB Mixed Use SAS 24Gb HS SSD	Support	16
4XB7A80342	BNW6	ThinkSystem 2.5" PM1655 3.2TB Mixed Use SAS 24Gb HS SSD	Support	16
4XB7A80343	BP3K	ThinkSystem 2.5" PM1655 6.4TB Mixed Use SAS 24Gb HS SSD	Support	16
2.5-inch hot-swap SSDs - 24 Gb SAS - Read Intensive/Entry/Capacity (<3 DWPD)				
4XB7A80318	BNWC	ThinkSystem 2.5" PM1653 960GB Read Intensive SAS 24Gb HS SSD	Support	16
4XB7A80319	BNWE	ThinkSystem 2.5" PM1653 1.92TB Read Intensive SAS 24Gb HS SSD	Support	16
4XB7A80320	BNWF	ThinkSystem 2.5" PM1653 3.84TB Read Intensive SAS 24Gb HS SSD	Support	16
4XB7A80321	BP3E	ThinkSystem 2.5" PM1653 7.68TB Read Intensive SAS 24Gb HS SSD	Support	16
4XB7A80322	BP3J	ThinkSystem 2.5" PM1653 15.36TB Read Intensive SAS 24Gb HS SSD	Support	16
4XB7A80323	BP3D	ThinkSystem 2.5" PM1653 30.72TB Read Intensive SAS 24Gb HS SSD	Support	16

Table 28. 2.5-inch hot-swap 12 Gb SAS SSDs

Part number	Feature code	Description	SED support	Max Qty
2.5-inch hot-swap SSDs - 12 Gb SAS - Write Intensive/Performance (10+ DWPD)				
4XB7A83214	BR10	ThinkSystem 2.5" Nytro 3750 400GB Write Intensive SAS 12Gb HS SSD	Support	16
4XB7A83215	BR0Z	ThinkSystem 2.5" Nytro 3750 800GB Write Intensive SAS 12Gb HS SSD	Support	16
4XB7A83216	BR0Y	ThinkSystem 2.5" Nytro 3750 1.6TB Write Intensive SAS 12Gb HS SSD	Support	16
4XB7A83217	BR0X	ThinkSystem 2.5" Nytro 3750 3.2TB Write Intensive SAS 12Gb HS SSD	Support	16
4XB7A70006	BG07	ThinkSystem 2.5" Nytro 3732 400GB Performance SAS 12Gb Hot Swap SSD	No	16
4XB7A70005	BG06	ThinkSystem 2.5" Nytro 3732 800GB Performance SAS 12Gb Hot Swap SSD	No	16
4XB7A70007	BFZZ	ThinkSystem 2.5" Nytro 3732 800GB Performance SAS 12Gb Hot Swap SSD SED	Support	16
4XB7A70004	BG05	ThinkSystem 2.5" Nytro 3732 1.6TB Performance SAS 12Gb Hot Swap SSD	No	16
4XB7A70003	BG04	ThinkSystem 2.5" Nytro 3732 3.2TB Performance SAS 12Gb Hot Swap SSD	No	16
2.5-inch hot-swap SSDs - 12 Gb SAS - Mixed Use/Mainstream (3-5 DWPD)				
4XB7A17062	B8HU	ThinkSystem 2.5" PM1645a 800GB Mainstream SAS 12Gb Hot Swap SSD	No	16
4XB7A17063	B8J4	ThinkSystem 2.5" PM1645a 1.6TB Mainstream SAS 12Gb Hot Swap SSD	No	16
4XB7A17064	B8JD	ThinkSystem 2.5" PM1645a 3.2TB Mainstream SAS 12Gb Hot Swap SSD	No	16
4XB7A17065	B8JA	ThinkSystem 2.5" PM1645a 6.4TB Mainstream SAS 12Gb Hot Swap SSD	No	16
2.5-inch hot-swap SSDs - 12 Gb SAS - Read Intensive/Entry/Capacity (<3 DWPD)				
4XB7A38175	B91A	ThinkSystem 2.5" PM1643a 960GB Entry SAS 12Gb Hot Swap SSD	No	16
4XB7A38176	B91B	ThinkSystem 2.5" PM1643a 1.92TB Entry SAS 12Gb Hot Swap SSD	No	16
4XB7A17054	B91C	ThinkSystem 2.5" PM1643a 3.84TB Entry SAS 12Gb Hot Swap SSD	No	16
4XB7A17055	B91D	ThinkSystem 2.5" PM1643a 7.68TB Entry SAS 12Gb Hot Swap SSD	No	16

Table 29. 2.5-inch hot-swap 6 Gb SATA SSDs

Part number	Feature code	Description	SED support	Max Qty
2.5-inch hot-swap SSDs - 6 Gb SATA - Mixed Use/Mainstream (3-5 DWPD)				
4XB7A82289	BQ21	ThinkSystem 2.5" 5400 MAX 480GB Mixed Use SATA 6Gb HS SSD	Support	16
4XB7A82290	BQ24	ThinkSystem 2.5" 5400 MAX 960GB Mixed Use SATA 6Gb HS SSD	Support	16
4XB7A82291	BQ22	ThinkSystem 2.5" 5400 MAX 1.92TB Mixed Use SATA 6Gb HS SSD	Support	16
4XB7A82292	BQ23	ThinkSystem 2.5" 5400 MAX 3.84TB Mixed Use SATA 6Gb HS SSD	Support	16
4XB7A17125	BA7Q	ThinkSystem 2.5" S4620 480GB Mixed Use SATA 6Gb HS SSD	No	16
4XB7A17126	BA4T	ThinkSystem 2.5" S4620 960GB Mixed Use SATA 6Gb HS SSD	No	16
4XB7A17087	B8J1	ThinkSystem 2.5" 5300 240GB Mainstream SATA 6Gb Hot Swap SSD	No	16
4XB7A17088	B8HY	ThinkSystem 2.5" 5300 480GB Mainstream SATA 6Gb Hot Swap SSD	No	16

Part number	Feature code	Description	SED support	Max Qty
4XB7A17089	B8J6	ThinkSystem 2.5" 5300 960GB Mainstream SATA 6Gb Hot Swap SSD	No	16
4XB7A17090	B8JE	ThinkSystem 2.5" 5300 1.92TB Mainstream SATA 6Gb Hot Swap SSD	No	16
4XB7A17091	B8J7	ThinkSystem 2.5" 5300 3.84TB Mainstream SATA 6Gb Hot Swap SSD	No	16
4XB7A13633	B49L	ThinkSystem 2.5" S4610 240GB Mixed Use SATA 6Gb HS SSD	No	16
4XB7A13637	B49Q	ThinkSystem 2.5" S4610 3.84TB Mixed Use SATA 6Gb HS SSD	No	16
2.5-inch hot-swap SSDs - 6 Gb SATA - Read Intensive/Entry (<3 DWPD)				
4XB7A82258	BQ1Q	ThinkSystem 2.5" 5400 PRO 240GB Read Intensive SATA 6Gb HS SSD	Support	16
4XB7A82259	BQ1P	ThinkSystem 2.5" 5400 PRO 480GB Read Intensive SATA 6Gb HS SSD	Support	16
4XB7A82260	BQ1R	ThinkSystem 2.5" 5400 PRO 960GB Read Intensive SATA 6Gb HS SSD	Support	16
4XB7A82261	BQ1X	ThinkSystem 2.5" 5400 PRO 1.92TB Read Intensive SATA 6Gb HS SSD	Support	16
4XB7A82262	BQ1S	ThinkSystem 2.5" 5400 PRO 3.84TB Read Intensive SATA 6Gb HS SSD	Support	16
4XB7A82263	BQ1T	ThinkSystem 2.5" 5400 PRO 7.68TB Read Intensive SATA 6Gb HS SSD	Support	16
4XB7A72438	BM8B	ThinkSystem 2.5" PM893 480GB Read Intensive SATA 6Gb HS SSD	No	16
4XB7A72439	BM8A	ThinkSystem 2.5" PM893 960GB Read Intensive SATA 6Gb HS SSD	No	16
4XB7A72440	BM89	ThinkSystem 2.5" PM893 1.92TB Read Intensive SATA 6Gb HS SSD	No	16
4XB7A72441	BM88	ThinkSystem 2.5" PM893 3.84TB Read Intensive SATA 6Gb HS SSD	No	16
4XB7A72442	BM87	ThinkSystem 2.5" PM893 7.68TB Read Intensive SATA 6Gb HS SSD	No	16
4XB7A17072	B99D	ThinkSystem 2.5" S4520 240GB Read Intensive SATA 6Gb HS SSD	No	16
4XB7A17101	BA7G	ThinkSystem 2.5" S4520 480GB Read Intensive SATA 6Gb HS SSD	No	16
4XB7A17102	BA7H	ThinkSystem 2.5" S4520 960GB Read Intensive SATA 6Gb HS SSD	No	16
4XB7A17103	BA7J	ThinkSystem 2.5" S4520 1.92TB Read Intensive SATA 6Gb HS SSD	No	16
4XB7A17104	BK77	ThinkSystem 2.5" S4520 3.84TB Read Intensive SATA 6Gb HS SSD	No	16
4XB7A17105	BK78	ThinkSystem 2.5" S4520 7.68TB Read Intensive SATA 6Gb HS SSD	No	16
4XB7A38271	BCTC	ThinkSystem 2.5" Multi Vendor 240GB Entry SATA 6Gb Hot Swap SSD	No	16
4XB7A38272	BCTD	ThinkSystem 2.5" Multi Vendor 480GB Entry SATA 6Gb Hot Swap SSD	No	16
4XB7A38273	BCTE	ThinkSystem 2.5" Multi Vendor 960GB Entry SATA 6Gb Hot Swap SSD	No	16
4XB7A38274	BCTF	ThinkSystem 2.5" Multi Vendor 1.92TB Entry SATA 6Gb Hot Swap SSD	No	16
4XB7A38275	BCTG	ThinkSystem 2.5" Multi Vendor 3.84TB Entry SATA 6Gb Hot Swap SSD	No	16
4XB7A17075	B8HV	ThinkSystem 2.5" 5300 240GB Entry SATA 6Gb Hot Swap SSD	No	16
4XB7A17076	B8JM	ThinkSystem 2.5" 5300 480GB Entry SATA 6Gb Hot Swap SSD	No	16
4XB7A17077	B8HP	ThinkSystem 2.5" 5300 960GB Entry SATA 6Gb Hot Swap SSD	No	16
4XB7A17078	B8J5	ThinkSystem 2.5" 5300 1.92TB Entry SATA 6Gb Hot Swap SSD	No	16
4XB7A17079	B8JP	ThinkSystem 2.5" 5300 3.84TB Entry SATA 6Gb Hot Swap SSD	No	16
4XB7A17080	B8J2	ThinkSystem 2.5" 5300 7.68TB Entry SATA 6Gb Hot Swap SSD	No	16
4XB7A38185	B9AC	ThinkSystem 2.5" 5210 960GB Entry SATA 6Gb Hot Swap QLC SSD	No	16
4XB7A38144	B7EW	ThinkSystem 2.5" 5210 1.92TB Entry SATA 6Gb Hot Swap QLC SSD	No	16
4XB7A38145	B7EX	ThinkSystem 2.5" 5210 3.84TB Entry SATA 6Gb Hot Swap QLC SSD	No	16
4XB7A38146	B7EY	ThinkSystem 2.5" 5210 7.68TB Entry SATA 6Gb Hot Swap QLC SSD	No	16
4XB7A10197	B34K	ThinkSystem 2.5" PM883 960GB Entry SATA 6Gb Hot Swap SSD	No	16
4XB7A10198	B34L	ThinkSystem 2.5" PM883 1.92TB Entry SATA 6Gb Hot Swap SSD	No	16
4XB7A10200	B4D2	ThinkSystem 2.5" PM883 7.68TB Entry SATA 6Gb Hot Swap SSD	No	16

Table 30. 2.5-inch hot-swap PCIe 4.0 NVMe SSDs

Part number	Feature code	Description	SED support	Max Qty
2.5-inch SSDs - U.2 PCIe 4.0 NVMe - Mixed Use/Mainstream (3-5 DWPD)				
4XB7A17129	BNEG	ThinkSystem 2.5" U.2 P5620 1.6TB Mixed Use NVMe PCIe 4.0 x4 HS SSD	Support	16
4XB7A17130	BNEH	ThinkSystem 2.5" U.2 P5620 3.2TB Mixed Use NVMe PCIe 4.0 x4 HS SSD	Support	16
4XB7A17133	BNEZ	ThinkSystem 2.5" U.2 P5620 6.4TB Mixed Use NVMe PCIe 4.0 x4 HS SSD	Support	16
4XB7A17152	BCFV	ThinkSystem 2.5" U.2 P5600 1.6TB Mixed Use NVMe PCIe 4.0 x4 HS SSD	No	16
2.5-inch SSDs - U.3 PCIe 4.0 NVMe - Mixed Use/Mainstream (3-5 DWPD)				
4XB7A79639	BNF1	ThinkSystem 2.5" U.3 7450 MAX 800GB Mixed Use NVMe PCIe 4.0 x4 HS SSD	Support	16
4XB7A13967	BNEJ	ThinkSystem 2.5" U.3 7450 MAX 1.6TB Mixed Use NVMe PCIe 4.0 x4 HS SSD	Support	16
4XB7A13970	BNEY	ThinkSystem 2.5" U.3 7450 MAX 3.2TB Mixed Use NVMe PCIe 4.0 x4 HS SSD	Support	16
4XB7A13971	BNEL	ThinkSystem 2.5" U.3 7450 MAX 6.4TB Mixed Use NVMe PCIe 4.0 x4 HS SSD	Support	16
4XB7A64175	BE03	ThinkSystem U.3 Kioxia CM6-V 800GB Mainstream NVMe PCIe 4.0 x4 Hot Swap SSD	No	16
4XB7A17112	B96Z	ThinkSystem U.3 Kioxia CM6-V 1.6TB Mainstream NVMe PCIe4.0 x4 Hot Swap SSD	No	16
4XB7A17113	B96T	ThinkSystem U.3 Kioxia CM6-V 3.2TB Mainstream NVMe PCIe4.0 x4 Hot Swap SSD	No	16
4XB7A17114	B96P	ThinkSystem U.3 Kioxia CM6-V 6.4TB Mainstream NVMe PCIe4.0 x4 Hot Swap SSD	No	16
2.5-inch SSDs - U.2 PCIe 4.0 NVMe - Read Intensive/Entry (<3 DWPD)				
4XB7A13941	BMGD	ThinkSystem 2.5" U.2 P5520 1.92TB Read Intensive NVMe PCIe 4.0 x4 HS SSD	Support	16
4XB7A13942	BMGE	ThinkSystem 2.5" U.2 P5520 3.84TB Read Intensive NVMe PCIe 4.0 x4 HS SSD	Support	16
4XB7A13943	BNEF	ThinkSystem 2.5" U.2 P5520 7.68TB Read Intensive NVMe PCIe 4.0 x4 HS SSD	Support	16
4XB7A13631	BNEQ	ThinkSystem 2.5" U.2 P5520 15.36TB Read Intensive NVMe PCIe 4.0 x4 HS SSD	Support	16
4XB7A17145	BCFT	ThinkSystem 2.5" U.2 P5500 1.92TB Read Intensive NVMe PCIe 4.0 x4 HS SSD	No	16
2.5-inch SSDs - U.3 PCIe 4.0 NVMe - Read Intensive/Entry (<3 DWPD)				
4XB7A79646	BNF3	ThinkSystem 2.5" U.3 7450 PRO 960GB Read Intensive NVMe PCIe 4.0 x4 HS SSD	Support	16
4XB7A79647	BNF2	ThinkSystem 2.5" U.3 7450 PRO 1.92TB Read Intensive NVMe PCIe 4.0 x4 HS SSD	Support	16
4XB7A79648	BNF5	ThinkSystem 2.5" U.3 7450 PRO 3.84TB Read Intensive NVMe PCIe 4.0 x4 HS SSD	Support	16

Part number	Feature code	Description	SED support	Max Qty
4XB7A79649	BNF4	ThinkSystem 2.5" U.3 7450 PRO 7.68TB Read Intensive NVMe PCIe 4.0 x4 HS SSD	Support	16
4XB7A83097	BQAV	ThinkSystem 2.5" U.3 7450 PRO 15.36TB Read Intensive NVMe PCIe 4.0 x4 HS SSD	Support	16

Note: NVMe PCIe SSDs support surprise hot removal and hot insertion, provided the operating system supports PCIe SSD hot-swap.

Table 31. 2.5-inch hot-swap PCIe 3.0 NVMe SSDs

Part number	Feature code	Description	SED support	Max Qty
2.5-inch SSDs - U.2 PCIe 3.0 NVMe - Write Intensive/Performance (10+ DWPD)				
7N47A00081	AUMJ	ThinkSystem 2.5" U.2 P4800X 375GB Write Intensive NVMe PCIe 3.0 x4 HS SSD	No	16
2.5-inch SSDs - U.2 PCIe 3.0 NVMe - Mixed Use/Mainstream (3-5 DWPD)				
4XB7A13936	B589	ThinkSystem U.2 Intel P4610 1.6TB Mainstream NVMe PCIe3.0 x4 Hot Swap SSD	No	16
4XB7A13938	B58B	ThinkSystem U.2 Intel P4610 6.4TB Mainstream NVMe PCIe3.0 x4 Hot Swap SSD	No	16
2.5-inch SSDs - U.2 PCIe 3.0 NVMe - Read Intensive/Entry (<3 DWPD)				
4XB7A10202	B58F	ThinkSystem U.2 Intel P4510 1.0TB Entry NVMe PCIe3.0 x4 Hot Swap SSD	No	16
4XB7A10205	B58H	ThinkSystem U.2 Intel P4510 4.0TB Entry NVMe PCIe3.0 x4 Hot Swap SSD	No	16
4XB7A10175	B34N	ThinkSystem U.2 PM983 1.92TB Entry NVMe PCIe 3.0 x4 Hot Swap SSD	No	16
4XB7A10176	B34P	ThinkSystem U.2 PM983 3.84TB Entry NVMe PCIe 3.0 x4 Hot Swap SSD	No	16
4XB7A10177	B4D3	ThinkSystem U.2 PM983 7.68TB Entry NVMe PCIe3.0 x4 Hot Swap SSD	No	16

Note: NVMe PCIe SSDs support surprise hot removal and hot insertion, provided the operating system supports PCIe SSD hot-swap.

Table 32. M.2 SATA drives

Part number	Feature code	Description	SED support	Max Qty
M.2 SSDs - 6 Gb SATA - Read Intensive/Entry (<3 DWPD)				
4XB7A82286	BQ1Z	ThinkSystem M.2 5400 PRO 240GB Read Intensive SATA 6Gb NHS SSD	Support	2
4XB7A82287	BQ1Y	ThinkSystem M.2 5400 PRO 480GB Read Intensive SATA 6Gb NHS SSD	Support	2
7N47A00129	AUUL	ThinkSystem M.2 32GB SATA 6Gbps Non-Hot Swap SSD	No	2
7N47A00130	AUUV	ThinkSystem M.2 128GB SATA 6Gbps Non-Hot Swap SSD	No	2
4XB7A17071	B8HS	ThinkSystem M.2 5300 240GB SATA 6Gbps Non-Hot Swap SSD	No	2
4XB7A17073	B919	ThinkSystem M.2 5300 480GB SATA 6Gbps Non-Hot Swap SSD	No	2

Internal backup units

The server does not supports any internal backup units, such as tape drives or RDX drives.

Optical drives

The server supports the external USB optical drive listed in the following table.

Table 33. External optical drive

Part number	Feature code	Description
7XA7A05926	AVV8	ThinkSystem External USB DVD RW Optical Disk Drive

The drive is based on the Lenovo Slim DVD Burner DB65 drive and supports the following formats: DVD-RAM, DVD-RW, DVD+RW, DVD+R, DVD-R, DVD-ROM, DVD-R DL, CD-RW, CD-R, CD-ROM.

I/O expansion options

The server supports up to 8 PCIe 3.0 slots, plus a slot for the LOM adapter and a slot for the M.2 adapter.

Five PCIe 3.0 slots (1, 2, 8, 10, 11) are on the system board and three slots (slots 3-5) are through a riser card. A riser card is standard on some models and optional on others. The LOM slot (slot 7) is also vertically mounted on the system board. Slot 6 is an internal slot for the M.2 adapter as described in the M.2 drives section.

The PCIe slots are as follows:

- Slot 1: PCIe 3.0 x16 (low profile, x16 physical slot) (CPU 2)
- Slot 2: PCIe 3.0 x8 (low profile, x8 physical slot) (CPU 2)
- Slot 3-5: Riser card slots (see below) (CPU 2)
- Slot 6: PCIe 2.0 x2 dedicated to M.2 adapter and drives (internal)
- Slot 7: Dedicated to Ethernet LOM phy adapter (CPU 1)
- Slot 8: PCIe 3.0 x8 (low profile, x8 physical slot) (CPU 1)
- Slot 10: PCIe 3.0 x16 (low profile, x16 physical slot) (CPU 1)
- Slot 11: PCIe 3.0 x16 (low profile, x16 physical slot) (CPU 1)

Tip: Slot 9 is not used in this server

The locations of the rear-accessible slots are shown in the following figure.

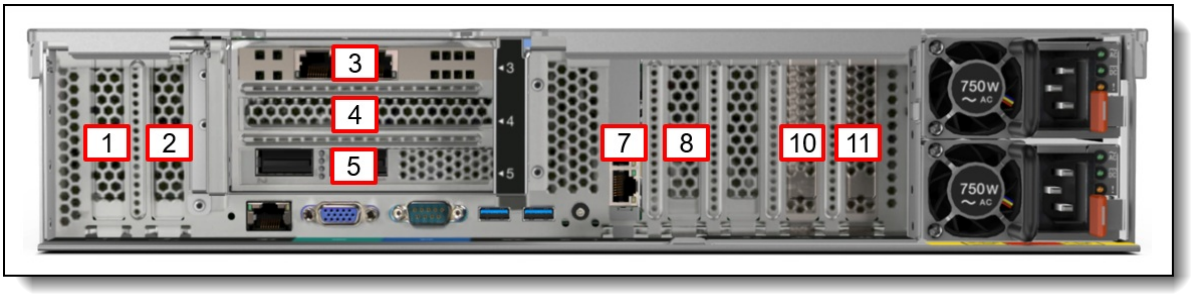

Figure 15. SR850P slots

Slots 3-5 are implemented using a riser card, and the SR850P supports four different riser cards as listed in the following table.

Table 34. PCI riser card options

Part number	Feature code	Description	Maximum supported
7C57A03950	AUR4	ThinkSystem SR850/SR860 x8/x8/x8 PCIe FH Riser 1 Kit	1
4C57A62817	BAVR	ThinkSystem SR850P x16/x8 PCIe FH Riser 1 Kit	1
7C57A03951	AUR7	ThinkSystem SR850/SR860 x8/x8/x8ML2 PCIe FH Riser 1 Kit	1
7C57A03952	AURB	ThinkSystem SR850/SR860 x8/x16ML2 PCIe FH Riser 1 Kit	1

The riser cards listed in the table have the following slots:

- x8/x8/x8 PCIe FH Riser:
  - Slot 3: PCIe 3.0 x8 FHHL (x16 physical slot)
  - Slot 4: PCIe 3.0 x8 FHHL (x16 physical slot)
  - Slot 5: PCIe 3.0 x8 FHHL (x16 physical slot)
- x16/x8 PCIe FH Riser:
  - Slot 3: PCIe 3.0 x16 FHHL (x16 physical slot)
  - Slot 4: None
  - Slot 5: PCIe 3.0 x8 FHHL (x16 physical slot)
- x8/x8/x8ML2 PCIe FH
  - Slot 3: PCIe 3.0 x8 FHHL (x16 physical slot)
  - Slot 4: PCIe 3.0 x8 FHHL (x16 physical slot)
  - Slot 5: PCIe 3.0 x8 ML2 FHHL (x8 physical slot)
- x8/x16ML2 PCIe FH Riser
  - Slot 3: PCIe 3.0 x8 FHHL (x16 physical slot)
  - Slot 4: None
  - Slot 5: PCIe 3.0 x16 ML2 FHHL (x16 physical slot)

Network adapters

The SR850P has integrated Intel Ethernet Connection X722 technology which can provide up to four 1/10GbE network ports via an optional LOM card. The X722 has the following features:

- Integrated into the Intel PCH chipset
- Supports 1GbE or 10GbE connections, depending on the selected LOM Phy adapter
- Offers VXLAN/NVGRE hardware offloads
- Supports VMDq and SR-IOV for advanced virtualization
- Supports iWarp RDMA

To provide connectivity to the X722, the server supports six different LOM (LAN on Motherboard) cards which provide the Ethernet PHY function. Only 1 LOM card can be installed. See Figure 3 for the location of the LOM slot.

The LOM card supports NC-SI to allow the network connection to be shared between the operating system and the XClarity Controller (XCC) management module. The LOM also supports Wake-on-LAN (WOL).

For more information about the X722 controller, see the Lenovo Press product guide: http://lenovopress.com/LP0654-intel-x722-integrated-controller

The following table lists the supported LOM cards.

Note: None of the LOM cards listed in the table support speeds lower than 1 Gbps.

Table 35. Supported LOM adapters

Part number	Feature code	Description	Ports	Slots supported	Maximum supported
Gigabit Ethernet					
7ZT7A00544	AUKG	ThinkSystem 1Gb 2-port RJ45 LOM	2x RJ45	7	1
7ZT7A00545	AUKH	ThinkSystem 1Gb 4-port RJ45 LOM	4x RJ45	7	1
10 Gb Ethernet					
7ZT7A00546	AUKJ	ThinkSystem 10Gb 2-port SFP+ LOM	2x SFP+ bays	7	1
7ZT7A00547	AUKK	ThinkSystem 10Gb 4-port SFP+ LOM	4x SFP+ bays	7	1
7ZT7A00548	AUKL	ThinkSystem 10Gb 2-port Base-T LOM	2x RJ45 (10GBASE-T)	7	1
7ZT7A00549	AUKM	ThinkSystem 10Gb 4-port Base-T LOM	4x RJ45 (10GBASE-T)	7	1

The server also supports an ML2 card provided a suitable ML2 riser card is installed (see the I/O expansion options section for details). The ML2 card supports NC-SI and WOL. The following table lists the supported ML2 adapters.

VFA5.2 and FCoE support: ThinkSystem servers do not support Features on Demand, so the Emulex VFA5.2 ML2 Dual Port 10GbE SFP+ Adapter, 00AG560, cannot be upgraded to FCoE support. If you need FCoE or iSCSI support use 01CV770 instead.

Table 36. Supported ML2 adapters

Part number	Feature code	Description	Bus width	Slots supported	Maximum supported
Gigabit Ethernet					
7ZT7A00536	AUKW	ThinkSystem Intel I350-T4 ML2 1Gb 4-Port RJ45 Ethernet Adapter	PCIe 3.0 x8	5	1
10 Gb Ethernet					
00JY940	ATRH	Intel X710-DA2 ML2 2x10GbE SFP+ Adapter	PCIe 3.0 x8	5	1
7ZT7A00497	AUKQ	ThinkSystem Broadcom 57416 10GBASE-T 2-Port ML2 Ethernet Adapter	PCIe 3.0 x8	5	1
01CV770	AU7Z	Emulex VFA5.2 ML2 2x10 GbE SFP+ Adapter and FCoE/iSCSI SW	PCIe 3.0 x8	5	1
25 Gb Ethernet					
7ZT7A00507	AUKU	ThinkSystem Mellanox ConnectX-4 Lx 10/25GbE SFP28 2-Port ML2 Ethernet Adapter	PCIe 3.0 x8	5	1
00MN990	ATZR	Mellanox ConnectX-4 Lx 10/25GbE SFP28 1-port ML2 Adapter	PCIe 3.0 x8	5	1
InfiniBand					
7ZT7A00501	AUKR	ThinkSystem Mellanox ConnectX-3 Pro ML2 FDR 2-Port QSFP VPI Adapter	PCIe 3.0 x8	5	1

The following table lists additional supported network adapters that can be installed in the regular PCIe slots.

VFA5.2 and FCoE support: ThinkSystem servers do not support Features on Demand, so the Emulex VFA5.2 2x10 GbE SFP+ PCIe Adapter, 00AG570, cannot be upgraded to FCoE support. If you need FCoE or iSCSI support use 00AG580 instead.

Table 37. Supported PCIe Network Adapters

Part number	Feature code	Description	Slots supported	Maximum supported
Gigabit Ethernet				
7ZT7A00534	AUZY	ThinkSystem I350-T2 PCIe 1Gb 2-Port RJ45 Ethernet Adapter	1-5, 8, 10, 11	8
7ZT7A00535	AUZW	ThinkSystem I350-T4 PCIe 1Gb 4-Port RJ45 Ethernet Adapter	1-5, 8, 10, 11	8
7ZT7A00482	AUZX	ThinkSystem Broadcom 5720 1GbE RJ45 2-Port PCIe Ethernet Adapter	1-5, 8, 10, 11	8
7ZT7A00484	AUZV	ThinkSystem Broadcom 5719 1GbE RJ45 4-Port PCIe Ethernet Adapter	1-5, 8, 10, 11	8
10 Gb Ethernet - 10GBase-T				
7ZT7A00496	AUKP	ThinkSystem Broadcom 57416 10GBASE-T 2-Port PCIe Ethernet Adapter	1-5, 8, 10, 11	8
00MM860	ATPX	Intel X550-T2 Dual Port 10GBase-T Adapter	1-5, 8, 10, 11	8
4XC7A79699	BMXB	ThinkSystem Intel X710-T4L 10GBase-T 4-Port PCIe Ethernet Adapter	1-5, 8, 10, 11	8

Part number	Feature code	Description	Slots supported	Maximum supported
4XC7A08225	B31G	ThinkSystem QLogic QL41134 PCIe 10Gb 4-Port Base-T Ethernet Adapter	1-5, 8, 10, 11	8
10 Gb Ethernet - SFP+				
7ZT7A00537	AUKX	ThinkSystem X710-DA2 PCIe 10Gb 2-Port SFP+ Ethernet Adapter	1-5, 8, 10, 11	5†
7ZT7A00493	AUKN	ThinkSystem Emulex OCe14104B-NX PCIe 10Gb 4-Port SFP+ Ethernet Adapter	3, 4, 5	3
00AG570*	AT7S	Emulex VFA5.2 2x10 GbE SFP+ PCIe Adapter	1-5, 8, 10, 11	8
00AG580	AT7T	Emulex VFA5.2 2x10 GbE SFP+ Adapter and FCoE/iSCSI SW	1-5, 8, 10, 11	8
25 Gb Ethernet				
4XC7A08238	B5T0	ThinkSystem Broadcom 57414 10/25GbE SFP28 2-port PCIe Ethernet Adapter	1-5, 8, 10, 11	8
4XC7A08295	BCD6	ThinkSystem Intel E810-DA2 10/25GbE SFP28 2-Port PCIe Ethernet Adapter	1-5, 8, 10, 11	8
7XC7A05523	B0WY	ThinkSystem Intel XXV710-DA2 10/25GbE SFP28 2-Port PCIe Ethernet Adapter	1-5, 8, 10, 11	5†
01GR250	AUAJ	Mellanox ConnectX-4 Lx 10/25GbE SFP28 2-port PCIe Ethernet Adapter	1-5, 8, 10, 11	8
4XC7A62580	BE4U	ThinkSystem Mellanox ConnectX-6 Lx 10/25GbE SFP28 2-Port PCIe Ethernet Adapter	1-5, 8, 10, 11	8
4XC7A08229	B31C	ThinkSystem Mellanox ConnectX-5 Ex 25/40GbE 2-port Low-Latency Adapter	1, 3, 10, 11	4
40 Gb Ethernet				
00MM950	ATRN	Mellanox ConnectX-4 Lx 1x40GbE QSFP+ Adapter	1-5, 8, 10, 11	8
7ZT7A00500	AUVG	ThinkSystem Mellanox ConnectX-4 PCIe FDR 2-Port QSFP VPI Adapter	1-5, 8, 10, 11	8
4XC7A08229	B31C	ThinkSystem Mellanox ConnectX-5 Ex 25/40GbE 2-port Low-Latency Adapter	1, 3, 10, 11	4
FDR InfiniBand				
7ZT7A00500	AUVG	ThinkSystem Mellanox ConnectX-4 PCIe FDR 2-Port QSFP VPI Adapter	1-5, 8, 10, 11	8
100 Gb Ethernet / EDR InfiniBand				
00MM960	ATRP	Mellanox ConnectX-4 2x100GbE/EDR IB QSFP28 VPI Adapter	1, 3, 10, 11	4
100 Gb Ethernet / HDR100 InfiniBand				
4XC7A08248	B8PP	ThinkSystem Mellanox ConnectX-6 Dx 100GbE QSFP56 2-port PCIe Ethernet Adapter	1, 3, 10, 11	4
4C57A14177	B4R9	ThinkSystem Mellanox ConnectX-6 HDR100/100GbE QSFP56 1-port PCIe VPI Adapter	1, 3, 10, 11	4
4C57A14178	B4RA	ThinkSystem Mellanox ConnectX-6 HDR100/100GbE QSFP56 2-port PCIe VPI Adapter	1, 3, 10, 11	4
Omni-Path Architecture (OPA)				
00WE023	AU0A	Intel OPA 100 Series Single-port PCIe 3.0 x8 HFA	1-5, 8, 10, 11	8

Part number	Feature code	Description	Slots supported	Maximum supported
00WE027	AU0B	Intel OPA 100 Series Single-port PCIe 3.0 x16 HFA	1, 3, 10, 11	4

* ThinkSystem servers do not support Features on Demand, so the Emulex VFA5.2 2x10 GbE SFP+ PCIe Adapter, 00AG570, cannot be upgraded to FCoE support. If you need FCoE or iSCSI support use 00AG580 instead.
† Support for the X710-DA2 and XXV710-DA2 adapters is limited to 5 adapters. See Support Tip HT508158 for details.

For more information, including the transceivers and cables that each adapter supports, see the list of Lenovo Press Product Guides in the Networking adapters category:
https://lenovopress.com/servers/options/ethernet

Fibre Channel host bus adapters

The following table lists the Fibre Channel HBAs supported by SR850P server.

Table 38. Fibre Channel HBAs

Part number	Feature code	Description	Slots supported	Maximum supported
64 Gb Fibre Channel HBAs				
4XC7A77485	BLC1	ThinkSystem Emulex LPe36002 64Gb 2-port PCIe Fibre Channel Adapter	1-5, 8, 10, 11	8
32 Gb Fibre Channel HBAs				
4XC7A76525	BJ3H	ThinkSystem Emulex LPe35002 32Gb 2-port PCIe Fibre Channel Adapter V2	1-5, 8, 10, 11	8
4XC7A76498	BJ3G	ThinkSystem Emulex LPe35000 32Gb 1-port PCIe Fibre Channel Adapter v2	1-5, 8, 10, 11	8
4XC7A08250	B5SX	ThinkSystem Emulex LPe35000 32Gb 1-port PCIe Fibre Channel Adapter	1-5, 8, 10, 11	8
4XC7A08251	B5SY	ThinkSystem Emulex LPe35002 32Gb 2-port PCIe Fibre Channel Adapter	1-5, 8, 10, 11	8
7ZT7A00516	AUNS	ThinkSystem QLogic QLE2740 PCIe 32Gb 1-Port SFP+ Fibre Channel Adapter	1-5, 8, 10, 11	8
7ZT7A00518	AUNU	ThinkSystem QLogic QLE2742 PCIe 32Gb 2-Port SFP+ Fibre Channel Adapter	1-5, 8, 10, 11	8
16 Gb Fibre Channel HBAs				
01CV750	ATZB	QLogic 16Gb Enhanced Gen5 FC Single-port HBA	1-5, 8, 10, 11	8
01CV760	ATZC	QLogic 16Gb Enhanced Gen5 FC Dual-port HBA	1-5, 8, 10, 11	8
01CV830	ATZU	Emulex 16Gb Gen6 FC Single-port HBA	1-5, 8, 10, 11	8
01CV840	ATZV	Emulex 16Gb Gen6 FC Dual-port HBA	1-5, 8, 10, 11	8

For more information, see the list of Lenovo Press Product Guides in the Host bus adapters category:
https://lenovopress.com/servers/options/hba

SAS adapters for external storage

The following table lists SAS HBAs and RAID adapters supported by server for use with external storage.

Table 39. Adapters for external storage

Part number	Feature code	Description	Slots supported	Maximum supported
SAS HBAs				
7Y37A01090	AUNR	ThinkSystem 430-8e SAS/SATA 12Gb HBA	1-5, 8, 10, 11	8
7Y37A01091	AUNN	ThinkSystem 430-16e SAS/SATA 12Gb HBA	1-5, 8, 10, 11	8
4Y37A78837	BNWK	ThinkSystem 440-8e SAS/SATA PCIe Gen4 12Gb HBA	1-5, 8, 10, 11	8
4Y37A09724	B8P7	ThinkSystem 440-16e SAS/SATA PCIe Gen4 12Gb HBA	1-5, 8, 10, 11	8
External RAID adapters				
7Y37A01087	AUNQ	ThinkSystem RAID 930-8e 4GB Flash PCIe 12Gb Adapter	1-5, 8, 10, 11	4
4Y37A78836	BNWJ	ThinkSystem RAID 940-8e 4GB Flash PCIe Gen4 12Gb Adapter	1-5, 8, 10, 11	4

Mixing storage adapter families: The following HBA/RAID adapter combinations are supported:

- X30 external adapters with other X30 adapters (internal or external)
- X40 external adapters with other X40 adapters (internal or external)
- X40 external adapters with X350 internal adapters

The following HBA/RAID adapter combinations are *not* supported:

- X30 adapters (internal or external) with X40 adapters (internal or external)
- X30 adapters (internal or external) with X350 internal adapters

For a comparison of the functions of the supported storage adapters, see the ThinkSystem RAID Adapter and HBA Reference:
https://lenovopress.com/lp1288#sr850p-support=SR850P&internal-or-external-ports=External

For more information, see the list of Lenovo Press Product Guides in the Host bus adapters and RAID adapters categories:
https://lenovopress.com/servers/options/hba
https://lenovopress.com/servers/options/raid

Flash storage adapters

The server supports the PCIe Flash Storage adapters listed in the following table.

Table 40. Flash Storage Adapters

Part number	Feature code	Description	Slots supported	Maximum supported
Mainstream NVMe PCIe Adapters - Optimized for mixed-intensive application workloads with an endurance of 3-5 DWPD.				
4XB7A14075	B8JH	ThinkSystem HHHL PM1735 1.6TB Mainstream NVMe PCIe4.0 x8 Flash Adapter	1-5, 8, 9, 11	8
4XB7A14076	B8HW	ThinkSystem HHHL PM1735 3.2TB Mainstream NVMe PCIe4.0 x8 Flash Adapter	1-5, 8, 9, 11	8
4XB7A14077	B96M	ThinkSystem HHHL PM1735 6.4TB Mainstream NVMe PCIe4.0 x8 Flash Adapter	1-5, 8, 9, 11	8

For details about these adapters, see the Lenovo Press product guides in the Flash Adapters category: https://lenovopress.com/servers/options/ssdadapter

GPU adapters

The SR850P does not support any graphics processing units (GPUs).

Cooling

The server has six 60 mm 23K RPM hot-swap fans and all six fans are standard in all models. The server offers N+1 redundancy, meaning that one fan can fail and the server still operates normally. There are no thermal restrictions on what components can be configured.

Power supplies

The server supports up to two redundant hot-swap power supplies.

Tip: Use Lenovo Capacity Planner to determine exactly what power your server needs: https://datacentersupport.lenovo.com/us/en/products/solutions-and-software/software/lenovo-capacity-planner/solutions/ht504651

Table 41. Power supply options

Part number	Feature code	Description	Maximum supported	110V AC	220V AC	240V DC China only
7N67A00883	BAFX	750W Platinum (230V/115V) Power Supply	2	Yes	Yes	Yes
7N67A00885	BAFY	1100W Platinum (230V/115V) Power Supply	2	Yes	Yes	Yes
7N67A00886	B7ER	1600W Platinum (230V) Power Supply	2	No	Yes	Yes
7N67A00887	BAFZ	2000W Platinum (230V) Power Supply	2	No	Yes	Yes

750W and 1100W power supplies are auto-sensing and support both 110V AC (100-127V 50/60 Hz) and 220V AC (200-240V 50/60 Hz) power. The 1600 W and 2000 W power supplies only supports 220V AC power.

For China customers, all power supplies are 240V DC ready; support is planned for a future date.

Note: At 110 V, the 1100W power supply generates 1050W of power.

Power supply options do not include a line cord.

For server configurations, the inclusion of a power cord is model dependent. Configure-to-order models can be configured without a power cord if desired.

Power cords

Line cords and rack power cables with C13 connectors can be ordered as listed in the following table.

110V customers: If you plan to use the 1100W power supply with a 110V power source, select a power cable that is rated above 10A. Power cables that are rated at 10A or below are not supported with 110V power.

Table 42. Power cords

Part number	Feature code	Description
Rack cables - C13 to C14		
SL67B08593	BPHZ	0.5m, 10A/100-250V, C13 to C14 Jumper Cord
00Y3043	A4VP	1.0m, 10A/100-250V, C13 to IEC 320-C14 Rack Power Cable
4L67A08367	B0N5	1.0m, 13A/100-250V, C13 to C14 Jumper Cord
39Y7937	6201	1.5m, 10A/100-250V, C13 to IEC 320-C14 Rack Power Cable
4L67A08368	B0N6	1.5m, 13A/100-250V, C13 to C14 Jumper Cord
4L67A08365	B0N4	2.0m, 10A/100-250V, C13 to IEC 320-C14 Rack Power Cable
4L67A08369	6570	2.0m, 13A/100-250V, C13 to C14 Jumper Cord
4L67A08366	6311	2.8m, 10A/100-250V, C13 to IEC 320-C14 Rack Power Cable
4L67A08370	6400	2.8m, 13A/100-250V, C13 to C14 Jumper Cord
39Y7932	6263	4.3m, 10A/100-250V, C13 to IEC 320-C14 Rack Power Cable
4L67A08371	6583	4.3m, 13A/100-250V, C13 to C14 Rack Power Cable
Rack cables - C13 to C14 (Y-cable)		
00Y3046	A4VQ	1.345m, 2X C13 to C14 Jumper Cord, Rack Power Cable
00Y3047	A4VR	2.054m, 2X C13 to C14 Jumper Cord, Rack Power Cable
Rack cables - C13 to C20		
39Y7938	6204	2.8m, 10A/100-250V, C13 to IEC 320-C20 Rack Power Cable
Rack cables - C13 to C20 (Y-cable)		
47C2491	A3SW	1.2m, 16A/100-250V, 2 Short C13s to Short C20 Rack Power Cable
47C2492	A3SX	2.5m, 16A/100-250V, 2 Long C13s to Short C20 Rack Power Cable
47C2493	A3SY	2.8m, 16A/100-250V, 2 Short C13s to Long C20 Rack Power Cable
47C2494	A3SZ	4.1m, 16A/100-250V, 2 Long C13s to Long C20 Rack Power Cable
Line cords		
39Y7930	6222	2.8m, 10A/250V, C13 to IRAM 2073 (Argentina) Line Cord
81Y2384	6492	4.3m 10A/220V, C13 to IRAM 2073 (Argentina) Line Cord
39Y7924	6211	2.8m, 10A/250V, C13 to AS/NZ 3112 (Australia/NZ) Line Cord
81Y2383	6574	4.3m, 10A/230V, C13 to AS/NZS 3112 (Aus/NZ) Line Cord
69Y1988	6532	2.8m, 10A/250V, C13 to NBR 14136 (Brazil) Line Cord
81Y2387	6404	4.3m, 10A/250V, C13 - 2P+Gnd (Brazil) Line Cord

Part number	Feature code	Description
39Y7928	6210	2.8m, 220-240V, C13 to GB 2099.1 (China) Line Cord
81Y2378	6580	4.3m, 10A/220V, C13 to GB 2099.1 (China) Line Cord
39Y7918	6213	2.8m, 10A/250V, C13 to DK2-5a (Denmark) Line Cord
81Y2382	6575	4.3m, 10A/230V, C13 to DK2-5a (Denmark) Line Cord
39Y7917	6212	2.8m, 10A/230V, C13 to CEE7-VII (Europe) Line Cord
81Y2376	6572	4.3m, 10A/230V, C13 to CEE7-VII (Europe) Line Cord
39Y7927	6269	2.8m, 10A/250V, C13(2P+Gnd) (India) Line Cord
81Y2386	6567	4.3m, 10A/240V, C13 to IS 6538 (India) Line Cord
39Y7920	6218	2.8m, 10A/250V, C13 to SI 32 (Israel) Line Cord
81Y2381	6579	4.3m, 10A/230V, C13 to SI 32 (Israel) Line Cord
39Y7921	6217	2.8m, 220-240V, C13 to CEI 23-16 (Italy/Chile) Line Cord
81Y2380	6493	4.3m, 10A/230V, C13 to CEI 23-16 (Italy/Chile) Line Cord
46M2593	A1RE	2.8m, 12A/125V, C13 to JIS C-8303 (Japan) Line Cord
4L67A08362	6495	4.3m, 12A/200V, C13 to JIS C-8303 (Japan) Line Cord
39Y7926	6335	4.3m, 12A/100V, C13 to JIS C-8303 (Japan) Line Cord
39Y7922	6214	2.8m, 10A/250V, C13 to SABS 164 (S Africa) Line Cord
81Y2379	6576	4.3m, 10A/230V, C13 to SABS 164 (South Africa) Line Cord
39Y7925	6219	2.8m, 220-240V, C13 to KETI (S Korea) Line Cord
81Y2385	6494	4.3m, 12A/220V, C13 to KSC 8305 (S. Korea) Line Cord
39Y7919	6216	2.8m, 10A/250V, C13 to SEV 1011-S24507 (Swiss) Line Cord
81Y2390	6578	4.3m, 10A/230V, C13 to SEV 1011-S24507 (Sws) Line Cord
23R7158	6386	2.8m, 10A/125V, C13 to CNS 10917-3 (Taiwan) Line Cord
81Y2375	6317	2.8m, 10A/240V, C13 to CNS 10917-3 (Taiwan) Line Cord
81Y2374	6402	2.8m, 13A/125V, C13 to CNS 60799 (Taiwan) Line Cord
4L67A08363	AX8B	4.3m, 10A 125V, C13 to CNS 10917 (Taiwan) Line Cord
81Y2389	6531	4.3m, 10A/250V, C13 to 76 CNS 10917-3 (Taiwan) Line Cord
81Y2388	6530	4.3m, 13A/125V, C13 to CNS 10917 (Taiwan) Line Cord
39Y7923	6215	2.8m, 10A/250V, C13 to BS 1363/A (UK) Line Cord
81Y2377	6577	4.3m, 10A/230V, C13 to BS 1363/A (UK) Line Cord
90Y3016	6313	2.8m, 10A/120V, C13 to NEMA 5-15P (US) Line Cord
46M2592	A1RF	2.8m, 10A/250V, C13 to NEMA 6-15P Line Cord
00WH545	6401	2.8m, 13A/120V, C13 to NEMA 5-15P (US) Line Cord
4L67A08359	6370	4.3m, 10A/125V, C13 to NEMA 5-15P (US) Line Cord
4L67A08361	6373	4.3m, 10A/250V, C13 to NEMA 6-15P (US) Line Cord
4L67A08360	AX8A	4.3m, 13A/120V, C13 to NEMA 5-15P (US) Line Cord

Integrated virtualization

The server supports booting from an operating system or hypervisor installed on an M.2 solid-state drive. See the Internal drives section for details and the list of available options. Preloaded M.2 drives can be configured as described in the Operating system support section.

You can download supported VMware vSphere hypervisor images from the following web page and load it on the M.2 drive using the instructions provided:
https://vmware.lenovo.com/content/custom_iso/

Systems management

The server contains an integrated service processor, XClarity Controller (XCC), which provides advanced control, monitoring, and alerting functions. The XCC is based on the Pilot4 XE401 baseboard management controller (BMC) using a dual-core ARM Cortex A9 service processor.

Local management

The SR850P offers a front operator panel with key LED status indicators, as shown in the following figure.

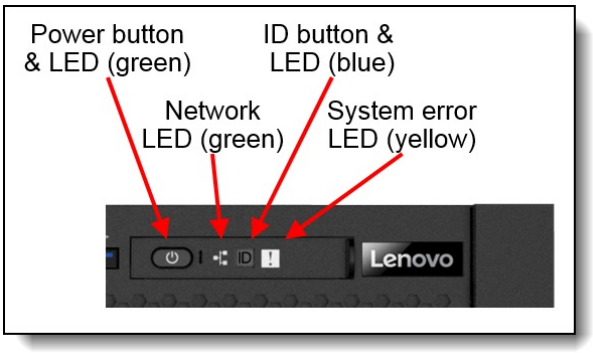

Figure 16. Front operator panel

As an alternative to the front operator panel, (certain models or configure-to-order; not available as a field upgrade), the server supports a pull-out LCD display panel. The LCD display panel allows quick access to system status, firmware, network, and health information. The following figure shows the front operator panel with LCD display.

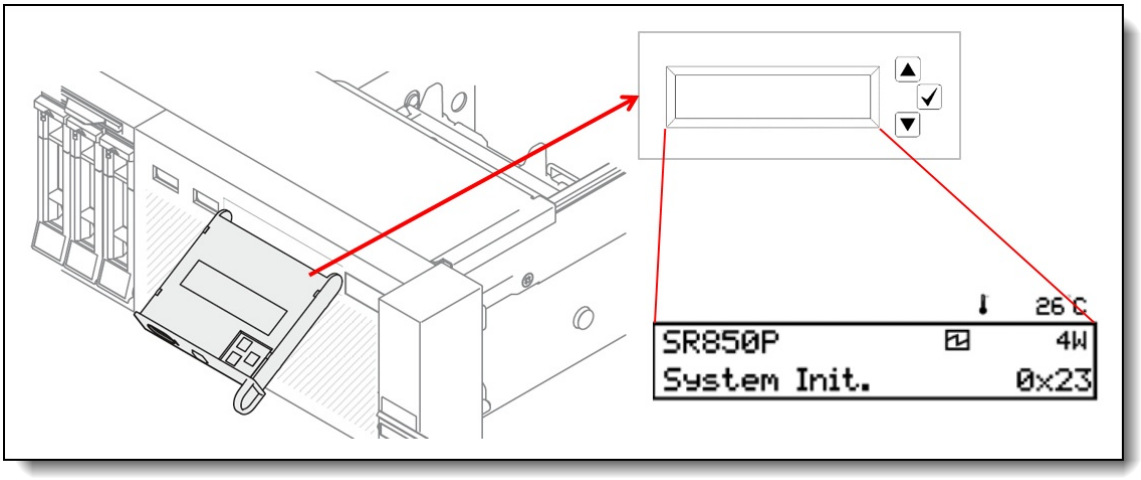

Figure 17. Front operator panel with LCD display

The LCD display and the function buttons give you access to the following information:

- Error messages
- System VPD: machine type & mode, serial number, UUID string
- System firmware levels: UEFI and XCC firmware
- XCC network information: hostname, MAC address, IP address, DNS addresses
- Environmental data: Ambient temperature, CPU temperature, AC input voltage, estimated power consumption
- System reset action

The front operator panel with LCD display can be ordered as listed in the following table.

Table 43. LCD system information display panel

Part number	Feature code	Description
None*	AUMW	Front operator panel with LCD display

* Only available configure-to-order or with predefined models

The server offers light path diagnostics. If an environmental condition exceeds a threshold or if a system component fails, the XCC lights LEDs inside the server to help you diagnose the problem and find the failing part. The SR850P has fault LEDs next to the following components:

- Each processor
- Each memory DIMM
- Each drive bay
- Each system fan
- Each power supply

The front of the server also houses an information pull-out tab (also known as the network access tag). See Figure 2 for the location. A label on the tab shows the network information (MAC address and other data) to remotely access XClarity Controller.

System status with XClarity Mobile

The XClarity Mobile app includes a tethering function where you can connect your Android or iOS device to the server via USB to see the status of the server.

The steps to connect the mobile device are as follows:

1. Enable USB Management on the server, by holding down the ID button for 3 seconds (or pressing the dedicated USB management button if one is present)
2. Connect the mobile device via a USB cable to the server's USB port with the management symbol 
3. In iOS or Android settings, enable Personal Hotspot or USB Tethering
4. Launch the Lenovo XClarity Mobile app

Once connected you can see the following information:

- Server status including error logs (read only, no login required)
- Server management functions (XClarity login credentials required)

Remote management

The server offers a dedicated RJ45 port at the rear of the server for remote management via the XClarity Controller management processor. The port supports 10/100/1000 Mbps speeds.

Remote server management is provided through industry-standard interfaces:

- Intelligent Platform Management Interface (IPMI) Version 2.0
- Simple Network Management Protocol (SNMP) Version 3 (no SET commands; no SMNP v1)
- Common Information Model (CIM-XML)
- Representational State Transfer (REST) support
- Redfish support (DMTF compliant)
- Web browser - HTML 5-based browser interface (Java and ActiveX not required) using a responsive design (content optimized for the device being used - laptop, tablet, phone) with NLS support

IPMI via the Ethernet port (IPMI over LAN) is supported, however it is disabled by default. For CTO orders you can specify whether you want to the feature enabled or disabled in the factory, using the feature codes listed in the following table.

Table 44. IPMI-over-LAN settings

Part number	Feature code	Description
CTO only	B7XZ	Disable IPMI-over-LAN (default)
CTO only	B7Y0	Enable IPMI-over-LAN

A virtual presence (remote control) capability also comes standard in the server for remote server management. Virtual media (remote drive images) support is optional via a software license upgrade.

The remote control functions include the following:

- Remotely viewing video with graphics resolutions up to 1600x1200 at 75 Hz with up to 23 bits per pixel, regardless of the system state
- Remotely accessing the server using the keyboard and mouse from a remote client
- Capturing blue-screen errors
- International keyboard mapping support
- LDAP-based authentication
- With the XCC Enterprise license upgrade, mapping ISO and diskette IMG image files as virtual drives that are available for use by the server

The Enterprise license upgrade, shown in the following table, enables the following features:

- Boot Capture
- Remote mounting of ISO and IMG files
- Virtual console collaboration - Ability for up to 6 remote users to be log into the remote session simultaneously
- Power capping
- License for XClarity Energy Manager

Table 45. XClarity Controller Enterprise Upgrade

Part number	Feature code	Description
4L47A09133	AVUU	ThinkSystem XClarity Controller Advanced to Enterprise Upgrade

Lenovo XClarity Administrator

Lenovo XClarity Administrator is a centralized resource management solution designed to reduce complexity, speed response, and enhance the availability of Lenovo systems and solutions. It provides agent-free hardware management for ThinkSystem servers, in addition to ThinkServer, System x, and Flex System servers. The administration dashboard is based on HTML 5 and allows fast location of resources so tasks can be run quickly.

Because Lenovo XClarity Administrator does not require any agent software to be installed on the managed endpoints, there are no CPU cycles spent on agent execution, and no memory is used, which means that up to 1GB of RAM and 1 - 2% CPU usage is saved, compared to a typical managed system where an agent is required.

Lenovo XClarity Administrator is an optional software component for the SR850P. The software can be downloaded and used at no charge to discover and monitor the SR850P and to manage firmware upgrades.

If software support is required for Lenovo XClarity Administrator, or premium features such as configuration management and operating system deployment are required, Lenovo XClarity Pro software subscription should be ordered. Lenovo XClarity Pro is licensed on a per managed system basis, that is, each managed Lenovo system requires a license.

The following table lists the Lenovo XClarity software license options.

Table 46. Lenovo XClarity Pro ordering information

Part number	Feature code	Description
00MT201	1339	Lenovo XClarity Pro, per Managed Endpoint w/1 Yr SW S&S
00MT202	1340	Lenovo XClarity Pro, per Managed Endpoint w/3 Yr SW S&S
00MT203	1341	Lenovo XClarity Pro, per Managed Endpoint w/5 Yr SW S&S
7S0X000HWW	SAYV	Lenovo XClarity Pro, per Managed Endpoint w/6 Yr SW S&S
7S0X000JWW	SAYW	Lenovo XClarity Pro, per Managed Endpoint w/7 Yr SW S&S

Lenovo XClarity Administrator offers the following standard features that are available at no charge:

- Auto-discovery and monitoring of Lenovo systems
- Firmware updates and compliance enforcement
- External alerts and notifications via SNMP traps, syslog remote logging, and e-mail
- Secure connections to managed endpoints
- NIST 800-131A or FIPS 140-2 compliant cryptographic standards between the management solution and managed endpoints
- Integration into existing higher-level management systems such as cloud automation and orchestration tools through REST APIs, providing extensive external visibility and control over hardware resources
- An intuitive, easy-to-use GUI
- Scripting with Windows PowerShell, providing command-line visibility and control over hardware resources

Lenovo XClarity Administrator offers the following premium features that require an optional Pro license:

- Pattern-based configuration management that allows to define configurations once and apply repeatedly without errors when deploying new servers or redeploying existing servers without disrupting the fabric
- Bare-metal deployment of operating systems and hypervisors to streamline infrastructure provisioning

For more information, refer to the Lenovo XClarity Administrator Product Guide:
http://lenovopress.com/tips1200

Lenovo XClarity Integrators

Lenovo also offers software plug-in modules, Lenovo XClarity Integrators, to manage physical infrastructure from leading external virtualization management software tools including those from Microsoft and VMware.

These integrators are offered at no charge, however if software support is required, a Lenovo XClarity Pro software subscription license should be ordered.

Lenovo XClarity Integrators offer the following additional features:

- Ability to discover, manage, and monitor Lenovo server hardware from VMware vCenter or Microsoft System Center
- Deployment of firmware updates and configuration patterns to Lenovo x86 rack servers and Flex System from the virtualization management tool
- Non-disruptive server maintenance in clustered environments that reduces workload downtime by dynamically migrating workloads from affected hosts during rolling server updates or reboots
- Greater service level uptime and assurance in clustered environments during unplanned hardware events by dynamically triggering workload migration from impacted hosts when impending hardware failures are predicted

For more information about all the available Lenovo XClarity Integrators, see the Lenovo XClarity Administrator Product Guide: https://lenovopress.com/tips1200-lenovo-xclarity-administrator

Lenovo XClarity Provisioning Manager

Lenovo XClarity Provisioning Manager (LXPM) is a UEFI-based application embedded in ThinkSystem servers and accessible via the F1 key during system boot.

LXPM provides the following functions:

- Graphical UEFI Setup
- System inventory information and VPD update
- System firmware updates (UEFI and XCC)
- RAID setup wizard
- OS installation wizard (including unattended OS installation)
- Diagnostics functions

Lenovo XClarity Essentials

Lenovo offers the following XClarity Essentials software tools that can help you set up, use, and maintain the server at no additional cost:

- Lenovo Essentials OneCLI

  OneCLI is a collection of server management tools that uses a command line interface program to manage firmware, hardware, and operating systems. It provides functions to collect full system health information (including health status), configure system settings, and update system firmware and drivers.

- Lenovo Essentials UpdateXpress

  The UpdateXpress tool is a standalone GUI application for firmware and device driver updates that enables you to maintain your server firmware and device drivers up-to-date and help you avoid unnecessary server outages. The tool acquires and deploys individual updates and UpdateXpress System Packs (UXSPs) which are integration-tested bundles.

- Lenovo Essentials Bootable Media Creator

  The Bootable Media Creator (BOMC) tool is used to create bootable media for offline firmware update.

For more information and downloads, visit the Lenovo XClarity Essentials web page:
http://support.lenovo.com/us/en/documents/LNVO-center

Lenovo XClarity Energy Manager

Lenovo XClarity Energy Manager (LXEM) is a power and temperature management solution for data centers. It is an agent-free, web-based console that enables you to monitor and manage power consumption and temperature in your data center through the management console. It enables server density and data center capacity to be increased through the use of power capping.

LXEM is a licensed product. A single-node LXEM license is included with the XClarity Controller Enterprise upgrade as described in the Remote Management section. If your server does not have the XCC Enterprise upgrade, Energy Manager licenses can be ordered as shown in the following table.

Table 47. Lenovo XClarity Energy Manager

Part number	Description
4L40E51621	Lenovo XClarity Energy Manager Node License (1 license needed per server)

For more information about XClarity Energy Manager, see the following resources:

- Lenovo Support page:
  https://datacentersupport.lenovo.com/us/en/solutions/lnvo-lxem
- Lenovo Information Center:
  https://sysmgt.lenovofiles.com/help/topic/LXEM/lxem_overview.html?cp=4

Security

The server offers the following security features:

- Administrator and power-on password
- Trusted Platform Module (TPM) supporting both TPM 1.2 and TPM 2.0
- Optional Trusted Cryptographic Module (TCM) or Nationz TPM 2.0, available only in China
- Lockable top cover to help prevent access to internal components
- Optional lockable front security bezel
- Self-encrypting drives with support for IBM Security Key Lifecycle Manager

The server is NIST SP 800-147B compliant.

The TCM and Nationz TPM modules, available only for China customers, are installed in a dedicated socket on the system board, as shown in Figure 4.

The optional lockable front bezel is shown in the following figure and includes a key that enables you to secure the bezel over the drives and system controls thereby reducing the chance of unauthorized or accidental access to the server.

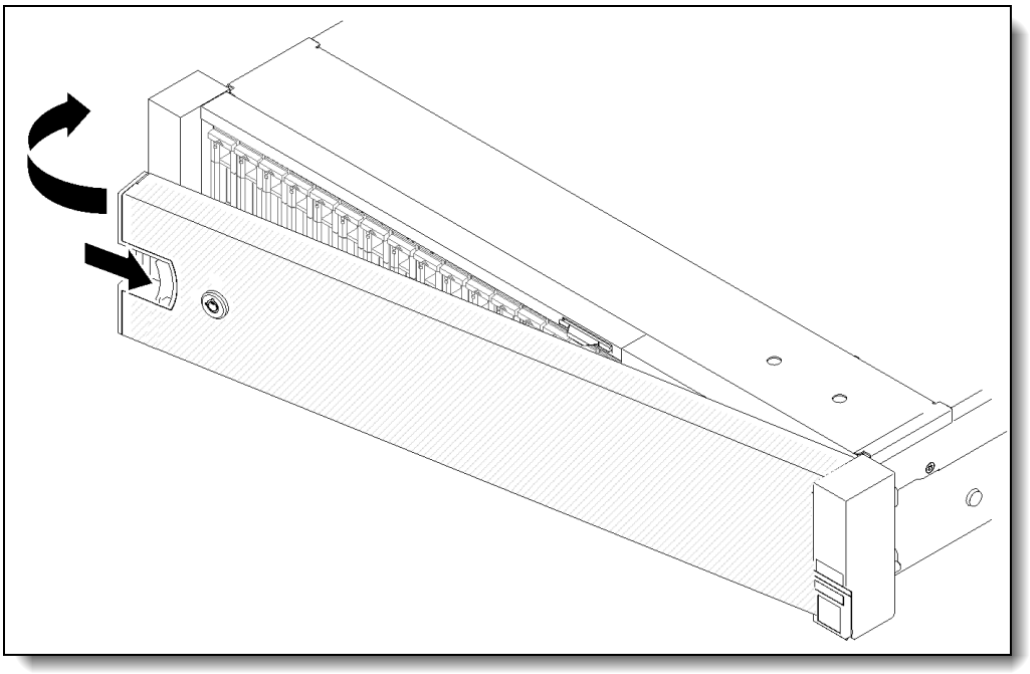

Figure 18. Lockable front security bezel

The dimensions of the security bezel are:

- Width: 437 mm (17.2 in.)
- Height: 87 mm (3.4 in.)
- Width: 23 mm (0.9 in.)

The following table lists the security options for the server.

Table 48. Security features

Part number	Feature code	Description
None*	AVKE	ThinkSystem Trusted Cryptographic Module (China customers only)
None*	B22N	ThinkSystem Nationz Trusted Platform Module v2.0 (China customers only)
7Z17A02580	AURX	ThinkSystem 2U Security Bezel

* Not available as a field upgrade. The component is CTO on pre-configured models only.

For SED drives and IBM Security Key Lifecycle Manager support see the SED encryption key management with ISKLM section.

Intel Transparent Supply Chain

Add a layer of protection in your data center and have peace of mind that the server hardware you bring into it is safe authentic and with documented, testable, and provable origin.

Lenovo has one of the world's best supply chains, as ranked by Gartner Group, backed by extensive and mature supply chain security programs that exceed industry norms and US Government standards. Now we are the first Tier 1 manufacturer to offer Intel® Transparent Supply Chain in partnership with Intel, offering you an unprecedented degree of supply chain transparency and assurance.

To enable Intel Transparent Supply Chain for the Intel-based servers in your order, add the following feature code in the DCSC configurator, under the Security tab.

Table 49. Intel Transparent Supply Chain ordering information

Feature code	Description
BB0P	Intel Transparent Supply Chain

For more information on this offering, see the paper *Introduction to Intel Transparent Supply Chain on Lenovo ThinkSystem Servers*, available from https://lenovopress.com/lp1434-introduction-to-intel-transparent-supply-chain-on-thinksystem-servers.

Rack installation

The following table lists the rack installation options that are available for the server.

The Front VGA Connector Upgrade Kit allows you to upgrade your server by adding a VGA video port to the front of the server (if the server does not already come with a front VGA port). When the front VGA is in use, the rear VGA port is automatically disabled.

Table 50. Rack installation options

Option	Feature Code	Description
Optional front VGA port		
7X97A03954	AUPX	ThinkSystem SR850 Front VGA Connector Upgrade Kit
Rail slides		
7M27A05700	AXCH	ThinkSystem Toolless Slide Rail Kit with 2U CMA
4M17A07280	B0TD	ThinkSystem Screw-in Slide Rail Kit with 2U CMA
7M27A05702	AXCA	ThinkSystem Toolless Slide Rail
4M17A07274	AXFN	ThinkSystem Tooled Slide Rail
4M17A07273	AXFM	ThinkSystem Toolless Friction Rail
Cable Management Arms (field upgrades only)		
7M27A05698	None*	ThinkSystem 2U CMA Upgrade Kit for Toolless Slide Rail
4M17A07275	None*	ThinkSystem 2U CMA Upgrade Kit for Screw-in Slide Rail

* These kits are for field upgrades only; for CTO use the rail kits with CMA, feature AXCH or B0TD

The following table summarizes the rail kit features and specifications.

Table 51. Rail kit features and specifications summary

Feature	ThinkSystem Toolless Slide Rail	ThinkSystem Screw-in Slide Rail	ThinkSystem Toolless Friction Rail
Part number	7M27A05702 (no CMA) 7M27A05700 (with CMA)	4M17A07274 (no CMA) 4M17A07280 (with CMA)	4M17A07273
Rail type	Full-out slide (ball bearing)	Full-out slide (ball bearing)	Half-out slide (friction)
Toolless installation	Yes	No	Yes
Cable Management Arm (CMA) support	Optional	Optional	No
In-rack server maintenance	Yes	Yes	No
1U PDU support	Yes	Yes	Yes
0U PDU support	Limited*	Limited*	Limited**
Rack type	Lenovo and IBM 4-post, IEC standard-compliant	Lenovo and IBM 4-post, IEC standard-compliant	Lenovo and IBM 4-post, IEC standard-compliant
Mounting holes	Square or round	Square, round, or threaded	Square or round
Mounting flange thickness	2 mm - 3.3 mm (0.08 - 0.13 in.)	2 mm - 3.3 mm (0.08 - 0.13 in.)	2 mm - 3.3 mm (0.08 - 0.13 in.)
Distance between front and rear mounting flanges	610 mm - 864 mm (24 - 34 in.)	610 mm - 864 mm (24 - 34 in.)	610 mm - 864 mm (24 - 34 in.)
Rail length***	730 mm (28.74 in.)	837 mm (32.9 in.)	728 mm (28.7 in.)

* For 0U PDU support, the rack must be at least 1100 mm (43.31 in.) deep without a CMA, or at least 1200 mm (47.24 in.) deep if a CMA is used.
** For 0U PDU support with the friction rail kit, the rack must be at least 1000 mm (39.37 in.) deep.
*** Measured when mounted on the rack, from the front surface of the front mounting flange to the rear most point of the rail.

Operating systems

The server supports the following operating systems:

- Microsoft Windows Server 2016
- Microsoft Windows Server 2019
- Microsoft Windows Server 2022
- Red Hat Enterprise Linux 7.6
- Red Hat Enterprise Linux 7.7
- Red Hat Enterprise Linux 7.8
- Red Hat Enterprise Linux 7.9
- Red Hat Enterprise Linux 8.0
- Red Hat Enterprise Linux 8.1
- Red Hat Enterprise Linux 8.2
- Red Hat Enterprise Linux 8.3
- Red Hat Enterprise Linux 8.4
- Red Hat Enterprise Linux 8.5
- Red Hat Enterprise Linux 8.6
- Red Hat Enterprise Linux 8.7
- Red Hat Enterprise Linux 8.8
- Red Hat Enterprise Linux 9.0
- Red Hat Enterprise Linux 9.1
- Red Hat Enterprise Linux 9.2

- SUSE Linux Enterprise Server 12 SP3
- SUSE Linux Enterprise Server 12 SP4
- SUSE Linux Enterprise Server 12 SP5
- SUSE Linux Enterprise Server 12 Xen SP4
- SUSE Linux Enterprise Server 12 Xen SP5
- SUSE Linux Enterprise Server 15
- SUSE Linux Enterprise Server 15 SP1
- SUSE Linux Enterprise Server 15 SP2
- SUSE Linux Enterprise Server 15 SP3
- SUSE Linux Enterprise Server 15 SP4
- SUSE Linux Enterprise Server 15 SP5
- SUSE Linux Enterprise Server 15 Xen
- SUSE Linux Enterprise Server 15 Xen SP1
- SUSE Linux Enterprise Server 15 Xen SP2
- SUSE Linux Enterprise Server 15 Xen SP3
- SUSE Linux Enterprise Server 15 Xen SP4
- SUSE Linux Enterprise Server 15 Xen SP5
- Ubuntu 22.04 LTS 64-bit
- VMware ESXi 6.5 U2
- VMware ESXi 6.5 U3
- VMware ESXi 6.7 U1
- VMware ESXi 6.7 U2
- VMware ESXi 6.7 U3
- VMware ESXi 7.0
- VMware ESXi 7.0 U1
- VMware ESXi 7.0 U2
- VMware ESXi 7.0 U3
- VMware ESXi 8.0
- VMware ESXi 8.0 U1
- VMware ESXi 8.0 U2

For a complete list of supported, certified and tested operating systems, plus additional details and links to relevant web sites, see the Operating System Interoperability Guide:
https://lenovopress.com/osig#servers=sr850p-7d2f-7d2g

For configure-to-order configurations, the server can be preloaded with VMware ESXi installed on M.2 cards. Ordering information is listed in the following table.

Table 52. VMware ESXi preload

Part number	Feature code	Description
CTO only	B3VW	VMware ESXi 6.5 U2 (Factory Installed)
CTO only	B6U0	VMware ESXi 6.5 U3 (factory installed)
CTO only	B4XA	VMware ESXi 6.7 U1 (Factory Installed)
CTO only	B6U1	VMware ESXi 6.7 U2 (factory installed)
CTO only	B88T	VMware ESXi 6.7 U3 (factory installed)
CTO only	BBZG	VMware ESXi 7.0 (Factory Installed)
CTO only	BE5E	VMware ESXi 7.0 U1 (Factory Installed)
CTO only	BHSR	VMware ESXi 7.0 U2 (Factory Installed)
CTO only	BMEY	VMware ESXi 7.0 U3 (Factory Installed)
CTO only	BMT5	VMware ESXi 8.0 (Factory Installed)
CTO only	BQ8S	VMware ESXi 8.0 U1 (Factory Installed)

Physical and electrical specifications

The SR850P has the following overall physical dimensions, excluding components that extend outside the standard chassis, such as EIA flanges, front security bezel (if any), and power supply handles:

- Width: 445 mm (17.5 inches)
- Height: 87 mm (3.4 inches)
- Depth: 765 mm (30.1 inches)

The following table lists the detailed dimensions. See the figure below for the definition of each dimension.

Table 53. Detailed dimensions

Dimension	Description
482 mm	X_a = Width, to the outsides of the front EIA flanges
435 mm	X_b = Width, to the rack rail mating surfaces
445 mm	X_c = Width, to the outer most chassis body feature
87 mm	Y_a = Height, from the bottom of chassis to the top of the chassis
693 mm	Z_a = Depth, from the rack flange mating surface to the rearmost I/O port surface
730 mm	Z_b = Depth, from the rack flange mating surface to the rearmost feature of the chassis body
728 mm	Z_c = Depth, from the rack flange mating surface to the rearmost feature such as power supply handle
35 mm	Z_d = Depth, from the forwardmost feature on front of EIA flange to the rack flange mating surface
47 mm	Z_e = Depth, from the front of security bezel (if applicable) or forwardmost feature to the rack flange mating surface

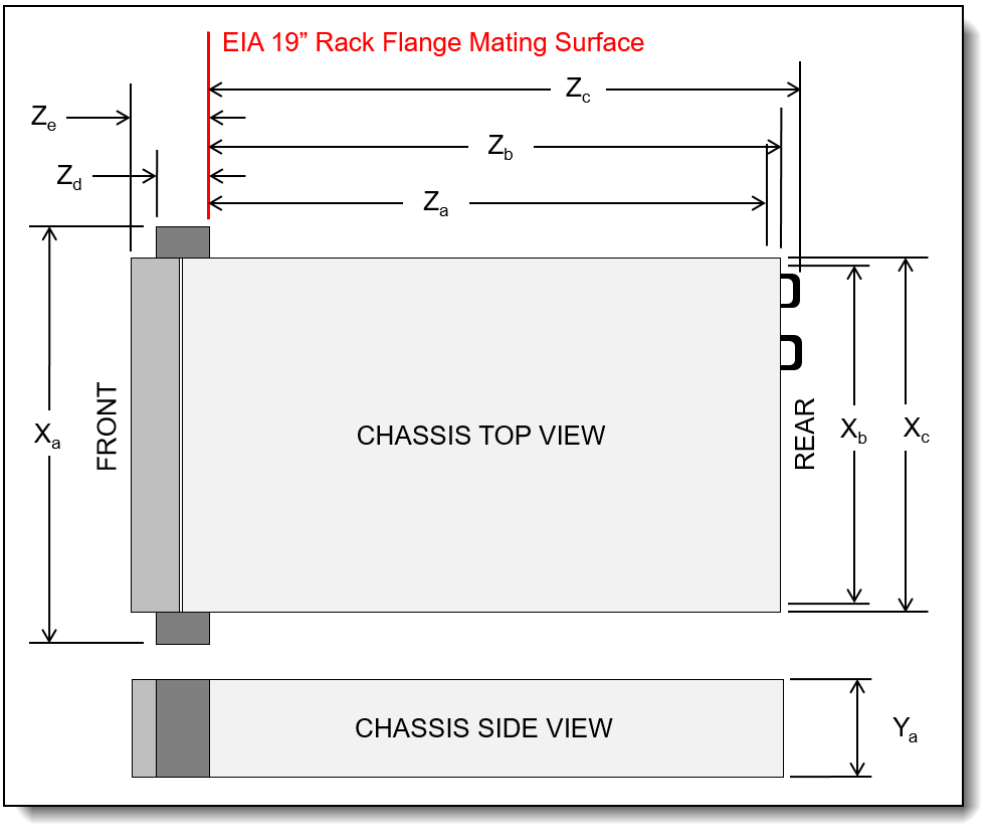

Figure 19. Server dimensions

The shipping dimensions (cardboard packaging) of the SR850P are as follows:

- Width: 592 mm (23.3 inches)
- Height: 282 mm (11.1 inches)
- Depth: 992 mm (39.1 inches)

Weight:

- Minimum: 18 kg (40 lb.)
- Fully configured: 27 kg (59.6 lb.)

Electrical specifications:

- Electrical - Input voltage
  - 100 - 127 (nominal) V AC, 50 Hz or 60 Hz
  - 200 - 240 (nominal) V AC, 50 Hz or 60 Hz
  - 180 - 300 V DC (support is planned; China only)
- Inlet current:
  - 100-127 V:
    - 750W power supply: 8.4 A
    - 1100W power supply: 12 A
  - 200-240 V:
    - 750W power supply: 4.1 A
    - 1100W power supply: 6 A
    - 1600W power supply: 8.7 A
    - 2000W power supply: 11 A

Operating environment

The ThinkSystem SR850P server complies with ASHRAE Class A2 specifications, and depending on the hardware configuration, also complies with ASHRAE Class A3 and Class A4 specifications. System performance may be impacted when operating temperature is outside ASHRAE A2 specification.

To comply with ASHRAE class A3 and class A4 specifications, the server models must meet the following hardware configuration requirements:

- Two power supplies installed
- NVMe drives not installed
- PCIe flash storage adapters not installed
- DCPMMs not installed

CPU core speed may be reduced depending on the processor selected.

Temperature and humidity

The server is supported in the following environment:

- Air temperature:
  - Operating:
    - ASHRAE Class A2: 10°C to 35°C (50°F to 95°F); the maximum ambient temperature decreases by 1°C for every 300 m (984 ft) increase in altitude above 900 m (2,953 ft).
    - ASHRAE Class A3: 5°C to 40°C (41°F to 104°F); the maximum ambient temperature decreases by 1°C for every 175 m (574 ft) increase in altitude above 900 m (2,953 ft).
    - ASHRAE Class A4: 5°C to 45°C (41°F to 113°F); the maximum ambient temperature decreases by 1°C for every 125 m (410 ft) increase in altitude above 900 m (2,953 ft).
  - Server off: 5°C to 45°C (41°F to 113°F)
  - Shipment/storage: -40°C to 60°C (-40°F to 140°F)
- Maximum altitude: 3,050 m (10,000 ft)

- Relative Humidity (non-condensing):
  - Operating
    - ASHRAE Class A2: 8% to 80%; maximum dew point: 21°C (70°F)
    - ASHRAE Class A3: 8% to 85%; maximum dew point: 24°C (75°F)
    - ASHRAE Class A4: 8% to 90%; maximum dew point: 24°C (75°F)
  - Shipment/storage: 8% to 90%

Heat output

The server generates the following heat/thermal output:

- Minimum configuration: 454 BTU/hr, 133 W
- Maximum configuration: 5118 BTU/hr, 1500 W

Acoustical noise emissions

The server has the following acoustic noise emissions declaration:

- Sound power, idling: 5.2 bels (minimum), 5.8 bels (typical), 6.4 bels (maximum)
- Sound power, operating: 5.8 bels (minimum), 6.8 bels (typical), 7.0 bels (maximum)

Shock and vibration

The server has the following vibration and shock limits:

- Vibration:
  - Operating: 0.21 G rms at 5 Hz to 500 Hz for 15 minutes across 3 axes
  - Non-operating: 1.04 G rms at 2 Hz to 200 Hz for 15 minutes across 6 surfaces
- Shock:
  - Operating: 15 G for 3 milliseconds in each direction (positive and negative X, Y, and Z axes)
  - Non-operating:
    - 12 kg - 22 kg: 50 G for 152 in./sec velocity change across 6 surfaces
    - 23 kg - 31 kg: 35 G for 152 in./sec velocity change across 6 surfaces

Particulate contamination

Airborne particulates (including metal flakes or particles) and reactive gases acting alone or in combination with other environmental factors such as humidity or temperature might damage the system that might cause the system to malfunction or stop working altogether.

The following specifications indicate the limits of particulates that the system can tolerate:

- Reactive gases:
  - The reactivity rate of copper coupons shall be less than 200 Angstroms per month (Å/month)
  - The reactivity rate of silver coupons shall be less than 200 Å/month
- Airborne particulates:
  - The room air should be continuously filtered with MERV 8 filters.
  - Air entering a data center should be filtered with MERV 11 or preferably MERV 13 filters.
  - The deliquescent relative humidity of the particulate contamination should be more than 60% RH
  - Data centers must be free of zinc whiskers

For additional information, see the Specifications section of the Setup Guide for the server, available from the Lenovo Documents site, https://pubs.lenovo.com/

Warranty and Support

The SR850P has a 1-year or 3-year warranty based on the machine type of the system:

- 7D2F - 1-year warranty

- 7D2G - 3-year warranty
- 7D2H - SAP HANA configurations with 3-year warranty

The standard warranty terms are customer-replaceable unit (CRU) and onsite (for field-replaceable units FRUs only) with standard call center support during normal business hours and 9x5 Next Business Day Parts Delivered.

Lenovo's additional support services provide a sophisticated, unified support structure for your data center, with an experience consistently ranked number one in customer satisfaction worldwide. Available offerings include:

- **Premier Support**

  Premier Support provides a Lenovo-owned customer experience and delivers direct access to technicians skilled in hardware, software, and advanced troubleshooting, in addition to the following:

  - Direct technician-to-technician access through a dedicated phone line
  - 24x7x365 remote support
  - Single point of contact service
  - End to end case management
  - Third-party collaborative software support
  - Online case tools and live chat support
  - On-demand remote system analysis

- **Warranty Upgrade (Preconfigured Support)**

  Services are available to meet the on-site response time targets that match the criticality of your systems.

  - 3, 4, or 5 years of service coverage
  - 1-year or 2-year post-warranty extensions
  - **Foundation Service**: 9x5 service coverage with next business day onsite response. YourDrive YourData is an optional extra (see below).
  - **Essential Service:** 24x7 service coverage with 4-hour onsite response or 24-hour committed repair (available only in select markets). Bundled with YourDrive YourData.
  - **Advanced Service:** 24x7 service coverage with 2-hour onsite response or 6-hour committed repair (available only in select markets). Bundled with YourDrive YourData.

- **Managed Services**

  Lenovo Managed Services provides continuous 24x7 remote monitoring (plus 24x7 call center availability) and proactive management of your data center using state-of-the-art tools, systems, and practices by a team of highly skilled and experienced Lenovo services professionals.

  Quarterly reviews check error logs, verify firmware & OS device driver levels, and software as needed. We'll also maintain records of latest patches, critical updates, and firmware levels, to ensure you systems are providing business value through optimized performance.

- **Technical Account Management (TAM)**

  A Lenovo Technical Account Manager helps you optimize the operation of your data center based on a deep understanding of your business. You gain direct access to your Lenovo TAM, who serves as your single point of contact to expedite service requests, provide status updates, and furnish reports to track incidents over time. In addition, your TAM will help proactively make service recommendations and manage your service relationship with Lenovo to make certain your needs are met.

- **Enterprise Server Software Support**

  Enterprise Software Support is an additional support service providing customers with software support on Microsoft, Red Hat, SUSE, and VMware applications and systems. Around the clock availability for critical problems plus unlimited calls and incidents helps customers address challenges fast, without incremental costs. Support staff can answer troubleshooting and diagnostic questions, address product comparability and interoperability issues, isolate causes of problems, report defects to software vendors, and more.

- **YourDrive YourData**

  Lenovo's YourDrive YourData is a multi-drive retention offering that ensures your data is always under your control, regardless of the number of drives that are installed in your Lenovo server. In the unlikely event of a drive failure, you retain possession of your drive while Lenovo replaces the failed drive part. Your data stays safely on your premises, in your hands. The YourDrive YourData service can be purchased in convenient bundles and is optional with Foundation Service. It is bundled with Essential Service and Advanced Service.

- **Health Check**

  Having a trusted partner who can perform regular and detailed health checks is central to maintaining efficiency and ensuring that your systems and business are always running at their best. Health Check supports Lenovo-branded server, storage, and networking devices, as well as select Lenovo-supported products from other vendors that are sold by Lenovo or a Lenovo-Authorized Reseller.

Examples of region-specific warranty terms are second or longer business day parts delivery or parts-only base warranty.

If warranty terms and conditions include onsite labor for repair or replacement of parts, Lenovo will dispatch a service technician to the customer site to perform the replacement. Onsite labor under base warranty is limited to labor for replacement of parts that have been determined to be field-replaceable units (FRUs). Parts that are determined to be customer-replaceable units (CRUs) do not include onsite labor under base warranty.

If warranty terms include parts-only base warranty, Lenovo is responsible for delivering only replacement parts that are under base warranty (including FRUs) that will be sent to a requested location for self-service. Parts-only service does not include a service technician being dispatched onsite. Parts must be changed at customer's own cost and labor and defective parts must be returned following the instructions supplied with the spare parts.

Lenovo Service offerings are region-specific. Not all preconfigured support and upgrade options are available in every region. For information about Lenovo service upgrade offerings that are available in your region, refer to the following resources:

- Service part numbers in Lenovo Data Center Solution Configurator (DCSC):
  http://dcsc.lenovo.com/#/services
- Lenovo Services Availability Locator
  http://lenovolocator.com/

For service definitions, region-specific details, and service limitations, please refer to the following documents:

- Lenovo Statement of Limited Warranty for Infrastructure Solutions Group (ISG) Servers and System Storage
  http://pcsupport.lenovo.com/us/en/solutions/ht503310
- Lenovo Data Center Services Agreement
  http://support.lenovo.com/us/en/solutions/ht116628

Services

Lenovo Services is a dedicated partner to your success. Our goal is to reduce your capital outlays, mitigate your IT risks, and accelerate your time to productivity.

Note: Some service options may not be available in all markets or regions. For more information, go to https://www.lenovo.com/services. For information about Lenovo service upgrade offerings that are available in your region, contact your local Lenovo sales representative or business partner.

Here's a more in-depth look at what we can do for you:

- **Asset Recovery Services**

  Asset Recovery Services (ARS) helps customers recover the maximum value from their end-of-life equipment in a cost-effective and secure way. On top of simplifying the transition from old to new equipment, ARS mitigates environmental and data security risks associated with data center equipment disposal. Lenovo ARS is a cash-back solution for equipment based on its remaining market value, yielding maximum value from aging assets and lowering total cost of ownership for your customers. For more information, see the ARS page, https://lenovopress.com/lp1266-reduce-e-waste-and-grow-your-bottom-line-with-lenovo-ars.

- **Assessment Services**

  An Assessment helps solve your IT challenges through an onsite, multi-day session with a Lenovo technology expert. We perform a tools-based assessment which provides a comprehensive and thorough review of a company's environment and technology systems. In addition to the technology based functional requirements, the consultant also discusses and records the non-functional business requirements, challenges, and constraints. Assessments help organizations like yours, no matter how large or small, get a better return on your IT investment and overcome challenges in the ever-changing technology landscape.

- **Design Services**

  Professional Services consultants perform infrastructure design and implementation planning to support your strategy. The high-level architectures provided by the assessment service are turned into low level designs and wiring diagrams, which are reviewed and approved prior to implementation. The implementation plan will demonstrate an outcome-based proposal to provide business capabilities through infrastructure with a risk-mitigated project plan.

- **Basic Hardware Installation**

  Lenovo experts can seamlessly manage the physical installation of your server, storage, or networking hardware. Working at a time convenient for you (business hours or off shift), the technician will unpack and inspect the systems on your site, install options, mount in a rack cabinet, connect to power and network, check and update firmware to the latest levels, verify operation, and dispose of the packaging, allowing your team to focus on other priorities.

- **Deployment Services**

  When investing in new IT infrastructures, you need to ensure your business will see quick time to value with little to no disruption. Lenovo deployments are designed by development and engineering teams who know our Products & Solutions better than anyone else, and our technicians own the process from delivery to completion. Lenovo will conduct remote preparation and planning, configure & integrate systems, validate systems, verify and update appliance firmware, train on administrative tasks, and provide post-deployment documentation. Customer's IT teams leverage our skills to enable IT staff to transform with higher level roles and tasks.

- **Integration, Migration, and Expansion Services**

  Move existing physical & virtual workloads easily, or determine technical requirements to support increased workloads while maximizing performance. Includes tuning, validation, and documenting ongoing run processes. Leverage migration assessment planning documents to perform necessary migrations.

Regulatory compliance

The SR850P server conforms to the following standards:

- Energy Star v3.0
- FCC: Verified to comply with Part 15 of the FCC Rules, Class A
- Canada ICES-003, issue 6, Class A
- UL/IEC 60950-1
- CSA C22.2 No. 60950-1
- NOM-019
- Argentina IEC60950-1
- Japan VCCI, Class A
- Australia/New Zealand AS/NZS CISPR 32, Class A; AS/NZS 60950.1
- IEC 60950-1 (CB Certificate and CB Test Report)
- China CCC (GB4943.1), GB9254 Class A, GB17625.1
- Taiwan BSMI CNS13438, Class A; CNS14336-1
- Korea KN32, Class A; KN35
- Russia, Belorussia and Kazakhstan, EAC: TP TC 004/2011(for Safety); TP TC 020/2011(for EMC)
- CE Mark (EN55032 Class A, EN60950-1, EN55024, EN61000-3-2, and EN61000-3-3)
- CISPR 32, Class A
- TUV-GS (EN60950-1 /IEC60950-1, EK1-ITB2000)
- India BIS certification

External drive enclosures

The server supports attachment to external drive enclosures using a RAID controller with external ports or a SAS host bus adapter. Adapters supported by the server are listed in the SAS adapters for external storage section.

Note: Information provided in this section is for ordering reference purposes only. For the operating system and adapter support details, refer to the interoperability matrix for a particular storage enclosure that can be found on the Lenovo Data Center Support web site:
http://datacentersupport.lenovo.com

Table 54. External drive enclosures

Model	Description
4587HC1	Lenovo Storage D1212 Disk Expansion Enclosure (2U enclosure wth 12x LFF drive bays)
4587HC2	Lenovo Storage D1224 Disk Expansion Enclosure (2U enclosure wth 24x SFF drive bays)
6413HC1	Lenovo Storage D3284 High Density Expansion Enclosure (5U enclosure wth 84x LFF drive bays)
7DAHCTO1WW	Lenovo ThinkSystem D4390 Direct Attached Storage (4U enclosure wth 90x LFF drive bays)

For details about supported drives, adapters, and cables, see the following Lenovo Press Product Guides:

- Lenovo Storage D1212 and D1224
  http://lenovopress.lenovo.com/lp0512
- Lenovo Storage D3284
  http://lenovopress.lenovo.com/lp0513
- Lenovo ThinkSystem D4390
  https://lenovopress.lenovo.com/lp1681

External storage systems

Lenovo offers the ThinkSystem DE Series and ThinkSystem DM Series external storage systems for high-performance storage. See the DE Series and DM Series product guides for specific controller models, expansion enclosures and configuration options:

- ThinkSystem DE Series Storage
  https://lenovopress.com/storage/thinksystem/de-series#rt=product-guide
- ThinkSystem DM Series Storage
  https://lenovopress.com/storage/thinksystem/dm-series#rt=product-guide

External backup units

The server supports both USB-attached RDX backup units and SAS-attached tape drives.

The following table lists the available external SAS tape backup options.

Tip: Verify the end-to-end support of an IBM tape backup solution through the IBM System Storage Interoperation Center (SSIC): http://www.ibm.com/systems/support/storage/ssic

Table 55. External SAS backup options

Part number	Description
External SAS tape backup drives	
6160S7E	IBM TS2270 Tape Drive Model H7S
6160S8E	IBM TS2280 Tape Drive Model H8S
6160S9E	IBM TS2290 Tape Drive Model H9S
External SAS tape backup autoloaders	
6171S7R	IBM TS2900 Tape Autoloader w/LTO7 HH SAS
6171S8R	IBM TS2900 Tape Autoloader w/LTO8 HH SAS
6171S9R	IBM TS2900 Tape Autoloader w/LTO9 HH SAS
External tape backup libraries	
6741A1F	IBM TS4300 3U Tape Library-Base Unit
SAS backup drives for TS4300 Tape Library	
01KP937	LTO 7 HH SAS Drive
01KP953	LTO 8 HH SAS Drive
02JH836	LTO 9 HH SAS Drive

For more information, see the list of Product Guides in the Backup units category: https://lenovopress.com/servers/options/backup

The following table lists the external RDX backup options available.

Table 56. External RDX dock and cartridges

Part number	Feature code	Description
External RDX docks		
4T27A10725	B32R	ThinkSystem RDX External USB 3.0 Dock (No cartridge included with the drive)
Cartridges		
7TP7A01601	AVF8	ThinkSystem RDX 500GB Cartridge
7TP7A01602	AVF1	ThinkSystem RDX 1TB Cartridge
7TP7A01603	AVF0	ThinkSystem RDX 2TB Cartridge
7TP7A04318	AXD1	ThinkSystem RDX 4TB Cartridge

For more information, see the Lenovo RDX USB 3.0 Disk Backup Solution product guide: https://lenovopress.com/tips0894-rdx-usb-30

Fibre Channel SAN switches

Lenovo offers the ThinkSystem DB Series of Fibre Channel SAN switches for high-performance storage expansion. See the DB Series product guides for models and configuration options:

- ThinkSystem DB Series SAN Switches:
  https://lenovopress.com/storage/switches/rack#rt=product-guide

Uninterruptible power supply units

The following table lists the uninterruptible power supply (UPS) units that are offered by Lenovo.

Table 57. Uninterruptible power supply units

Part number	Description
55941AX	RT1.5kVA 2U Rack or Tower UPS (100-125VAC)
55941KX	RT1.5kVA 2U Rack or Tower UPS (200-240VAC)
55942AX	RT2.2kVA 2U Rack or Tower UPS (100-125VAC)
55942KX	RT2.2kVA 2U Rack or Tower UPS (200-240VAC)
55943AX	RT3kVA 2U Rack or Tower UPS (100-125VAC)
55943KX	RT3kVA 2U Rack or Tower UPS (200-240VAC)
55945KX	RT5kVA 3U Rack or Tower UPS (200-240VAC)
55946KX	RT6kVA 3U Rack or Tower UPS (200-240VAC)
55948KX	RT8kVA 6U Rack or Tower UPS (200-240VAC)
55949KX	RT11kVA 6U Rack or Tower UPS (200-240VAC)
55948PX	RT8kVA 6U 3:1 Phase Rack or Tower UPS (380-415VAC)
55949PX	RT11kVA 6U 3:1 Phase Rack or Tower UPS (380-415VAC)
55943KT†	ThinkSystem RT3kVA 2U Standard UPS (200-230VAC) (2x C13 10A, 2x GB 10A, 1x C19 16A outlets)
55943LT†	ThinkSystem RT3kVA 2U Long Backup UPS (200-230VAC) (2x C13 10A, 2x GB 10A, 1x C19 16A outlets)
55946KT†	ThinkSystem RT6kVA 5U UPS (200-230VAC) (2x C13 10A outlets, 1x Terminal Block output)
5594XKT†	ThinkSystem RT10kVA 5U UPS (200-230VAC) (2x C13 10A outlets, 1x Terminal Block output)

† Only available in China and the Asia Pacific market.

For more information, see the list of Product Guides in the UPS category:
https://lenovopress.com/servers/options/ups

Power distribution units

The following table lists the power distribution units (PDUs) that are offered by Lenovo.

Table 58. Power distribution units

Part number	Feature code	Description	ANZ	ASEAN	Brazil	EET	MEA	RUCIS	WE	HTK	INDIA	JAPAN	LA	NA	PRC
0U Basic PDUs															
00YJ776	ATZY	0U 36 C13/6 C19 24A 1 Phase PDU	N	Y	Y	N	N	N	N	N	N	Y	Y	Y	N
00YJ777	ATZZ	0U 36 C13/6 C19 32A 1 Phase PDU	Y	Y	N	Y	Y	Y	Y	Y	Y	N	N	Y	Y
0U Switched and Monitored PDUs															
00YJ783	AU04	0U 12 C13/12 C19 Switched and Monitored 48A 3 Phase PDU	N	N	Y	N	N	N	Y	N	N	Y	Y	Y	N
00YJ781	AU03	0U 20 C13/4 C19 Switched and Monitored 24A 1 Phase PDU	N	N	Y	N	Y	N	Y	N	N	Y	Y	Y	N
1U Switched and Monitored PDUs															
4PU7A81117	BNDV	1U 18 C19/C13 switched and monitored 48A 3P WYE PDU - ETL	N	N	N	N	N	N	N	N	N	N	N	Y	N
4PU7A77467	BLC4	1U 18 C19/C13 Switched and Monitored 80A 3P Delta PDU	N	N	N	N	N	N	N	N	N	Y	N	Y	N
4PU7A77469	BLC6	1U 12 C19/C13 switched and monitored 60A 3P Delta PDU	N	N	N	N	N	N	N	N	N	N	N	Y	N
4PU7A77468	BLC5	1U 12 C19/C13 switched and monitored 32A 3P WYE PDU	Y	Y	Y	Y	Y	Y	Y	Y	Y	N	Y	Y	Y
4PU7A81118	BNDW	1U 18 C19/C13 switched and monitored 48A 3P WYE PDU - CE	Y	Y	Y	Y	Y	Y	Y	Y	Y	N	Y	N	Y
1U Ultra Density Enterprise PDUs (9x IEC 320 C13 + 3x IEC 320 C19 outlets)															
71763NU	6051	Ultra Density Enterprise C19/C13 PDU 60A/208V/3PH	N	N	Y	N	N	N	N	N	N	Y	Y	Y	N
71762NX	6091	Ultra Density Enterprise C19/C13 PDU Module	Y	Y	Y	Y	Y	Y	Y	Y	Y	Y	Y	Y	Y
1U C13 Enterprise PDUs (12x IEC 320 C13 outlets)															
39Y8941	6010	DPI C13 Enterprise PDU Module (WW)	Y	Y	Y	Y	Y	Y	Y	Y	Y	Y	Y	Y	Y
1U Front-end PDUs (3x IEC 320 C19 outlets)															
39Y8938	6002	DPI Single-phase 30A/120V Front-end PDU (US)	Y	Y	Y	Y	Y	Y	Y	Y	Y	Y	Y	Y	Y
39Y8939	6003	DPI Single-phase 30A/208V Front-end PDU (US)	Y	Y	Y	Y	Y	Y	Y	Y	Y	Y	Y	Y	Y
39Y8934	6005	DPI Single-phase 32A/230V Front-end PDU (International)	Y	Y	Y	Y	Y	Y	Y	Y	Y	Y	Y	Y	Y
39Y8940	6004	DPI Single-phase 60A/208V Front-end PDU (US)	Y	N	Y	Y	Y	Y	Y	N	N	Y	Y	Y	N
39Y8935	6006	DPI Single-phase 63A/230V Front-end PDU (International)	Y	Y	Y	Y	Y	Y	Y	Y	Y	Y	Y	Y	Y
1U NEMA PDUs (6x NEMA 5-15R outlets)															
39Y8905	5900	DPI 100-127V NEMA PDU	Y	Y	Y	Y	Y	Y	Y	Y	Y	Y	Y	Y	Y
Line cords for 1U PDUs that ship without a line cord															

Part number	Feature code	Description	ANZ	ASEAN	Brazil	EET	MEA	RUCIS	WE	HTK	INDIA	JAPAN	LA	NA	PRC
40K9611	6504	4.3m, 32A/380-415V, EPDU/IEC 309 3P+N+G 3ph wye (non-US) Line Cord	Y	Y	Y	Y	Y	Y	Y	Y	Y	Y	Y	Y	Y
40K9612	6502	4.3m, 32A/230V, EPDU to IEC 309 P+N+G (non-US) Line Cord	Y	Y	Y	Y	Y	Y	Y	Y	Y	Y	Y	Y	Y
40K9613	6503	4.3m, 63A/230V, EPDU to IEC 309 P+N+G (non-US) Line Cord	Y	Y	Y	Y	Y	Y	Y	Y	Y	Y	Y	Y	Y
40K9614	6500	4.3m, 30A/208V, EPDU to NEMA L6-30P (US) Line Cord	Y	Y	Y	Y	Y	Y	Y	Y	Y	Y	Y	Y	Y
40K9615	6501	4.3m, 60A/208V, EPDU to IEC 309 2P+G (US) Line Cord	N	N	Y	N	N	N	Y	N	N	Y	Y	Y	N
40K9617	6505	4.3m, 32A/230V, Souriau UTG Female to AS/NZ 3112 (Aus/NZ) Line Cord	Y	Y	Y	Y	Y	Y	Y	Y	Y	Y	Y	Y	Y
40K9618	6506	4.3m, 32A/250V, Souriau UTG Female to KSC 8305 (S. Korea) Line Cord	Y	Y	Y	Y	Y	Y	Y	Y	Y	Y	Y	Y	Y

For more information, see the Lenovo Press documents in the PDU category:
https://lenovopress.com/servers/options/pdu

Rack cabinets

The following table lists the supported rack cabinets.

Table 59. Rack cabinets

Part number	Description
93072RX	25U Standard Rack (1000mm)
93072PX	25U Static S2 Standard Rack (1000mm)
7D6DA007WW	ThinkSystem 42U Onyx Primary Heavy Duty Rack Cabinet (1200mm)
7D6DA008WW	ThinkSystem 42U Pearl Primary Heavy Duty Rack Cabinet (1200mm)
93604PX	42U 1200mm Deep Dynamic Rack
93614PX	42U 1200mm Deep Static Rack
93634PX	42U 1100mm Dynamic Rack
93634EX	42U 1100mm Dynamic Expansion Rack
93074RX	42U Standard Rack (1000mm)
7D6EA009WW	ThinkSystem 48U Onyx Primary Heavy Duty Rack Cabinet (1200mm)
7D6EA00AWW	ThinkSystem 48U Pearl Primary Heavy Duty Rack Cabinet (1200mm)

For specifications about these racks, see the Lenovo Rack Cabinet Reference, available from:
https://lenovopress.com/lp1287-lenovo-rack-cabinet-reference

For more information, see the list of Product Guides in the Rack cabinets category:
https://lenovopress.com/servers/options/racks

KVM console options

The following table lists the supported KVM consoles.

Table 60. KVM console

Part number	Description
4XF7A84188	ThinkSystem 18.5" LCD Console (with US English keyboard)

The following table lists the available KVM switches and the options that are supported with them.

Table 62. KVM switches and options

Part number	Description
KVM Console switches	
1754D2X	Global 4x2x32 Console Manager (GCM32)
1754D1X	Global 2x2x16 Console Manager (GCM16)
1754A2X	Local 2x16 Console Manager (LCM16)
1754A1X	Local 1x8 Console Manager (LCM8)
Cables for GCM and LCM Console switches	
46M5383	Virtual Media Conversion Option Gen2 (VCO2)
46M5382	Serial Conversion Option (SCO)

For more information, see the list of Product Guides in the KVM Switches and Consoles category:
http://lenovopress.com/servers/options/kvm

Lenovo Financial Services

Lenovo Financial Services reinforces Lenovo's commitment to deliver pioneering products and services that are recognized for their quality, excellence, and trustworthiness. Lenovo Financial Services offers financing solutions and services that complement your technology solution anywhere in the world.

We are dedicated to delivering a positive finance experience for customers like you who want to maximize your purchase power by obtaining the technology you need today, protect against technology obsolescence, and preserve your capital for other uses.

We work with businesses, non-profit organizations, governments and educational institutions to finance their entire technology solution. We focus on making it easy to do business with us. Our highly experienced team of finance professionals operates in a work culture that emphasizes the importance of providing outstanding customer service. Our systems, processes and flexible policies support our goal of providing customers with a positive experience.

We finance your entire solution. Unlike others, we allow you to bundle everything you need from hardware and software to service contracts, installation costs, training fees, and sales tax. If you decide weeks or months later to add to your solution, we can consolidate everything into a single invoice.

Our Premier Client services provide large accounts with special handling services to ensure these complex transactions are serviced properly. As a premier client, you have a dedicated finance specialist who manages your account through its life, from first invoice through asset return or purchase. This specialist develops an in-depth understanding of your invoice and payment requirements. For you, this dedication provides a high-quality, easy, and positive financing experience.

For your region-specific offers, please ask your Lenovo sales representative or your technology provider about the use of Lenovo Financial Services. For more information, see the following Lenovo website:

https://www.lenovo.com/us/en/landingpage/lenovo-financial-services/

Related publications and links

For more information, see these resources:

- Lenovo ThinkSystem SR850P product page:
  https://www.lenovo.com/us/en/data-center/servers/mission-critical/ThinkSystem-SR850P/p/77XX7HSS85R
- Interactive 3D Tour of the ThinkSystem SR850P:
  https://lenovopress.com/LP1238
- ThinkSystem SR850P drivers and support
  http://datacentersupport.lenovo.com/products/servers/thinksystem/sr850p/7d2g/downloads
- Lenovo Hardware Installation & Removal Videos on the SR850P:
  - YouTube: https://www.youtube.com/playlist?list=PLYV5R7hVcs-B2y7oAb54mfyuLrIusa_qE
  - Youku: http://list.youku.com/albumlist/show/id_50483449
- Lenovo ThinkSystem SR850P product publications:
  https://thinksystem.lenovofiles.com/help/topic/7D2F/introduction.html?cp=4_12
  - Quick Start
  - Rack Installation Guide
  - Setup Guide
  - Hardware Maintenance Manual
  - Messages and Codes Reference
  - Memory Population Reference
- Lenovo Hardware Installation & Removal Videos on the ThinkSystem SR850P:
  - YouTube: https://www.youtube.com/playlist?list=PLYV5R7hVcs-B2y7oAb54mfyuLrIusa_qE
  - Youku: https://list.youku.com/albumlist/show/id_50483449
- ServerProven hardware compatibility:
  http://www.lenovo.com/us/en/serverproven

Related product families

Product families related to this document are the following:

- 4-Socket Rack Servers
- Mission-Critical Rack Servers
- ThinkSystem SR850P Server

Notices

Lenovo may not offer the products, services, or features discussed in this document in all countries. Consult your local Lenovo representative for information on the products and services currently available in your area. Any reference to a Lenovo product, program, or service is not intended to state or imply that only that Lenovo product, program, or service may be used. Any functionally equivalent product, program, or service that does not infringe any Lenovo intellectual property right may be used instead. However, it is the user's responsibility to evaluate and verify the operation of any other product, program, or service. Lenovo may have patents or pending patent applications covering subject matter described in this document. The furnishing of this document does not give you any license to these patents. You can send license inquiries, in writing, to:

Lenovo (United States), Inc.
8001 Development Drive
Morrisville, NC 27560
U.S.A.
Attention: Lenovo Director of Licensing

LENOVO PROVIDES THIS PUBLICATION ”AS IS” WITHOUT WARRANTY OF ANY KIND, EITHER EXPRESS OR IMPLIED, INCLUDING, BUT NOT LIMITED TO, THE IMPLIED WARRANTIES OF NON-INFRINGEMENT, MERCHANTABILITY OR FITNESS FOR A PARTICULAR PURPOSE. Some jurisdictions do not allow disclaimer of express or implied warranties in certain transactions, therefore, this statement may not apply to you.

This information could include technical inaccuracies or typographical errors. Changes are periodically made to the information herein; these changes will be incorporated in new editions of the publication. Lenovo may make improvements and/or changes in the product(s) and/or the program(s) described in this publication at any time without notice.

The products described in this document are not intended for use in implantation or other life support applications where malfunction may result in injury or death to persons. The information contained in this document does not affect or change Lenovo product specifications or warranties. Nothing in this document shall operate as an express or implied license or indemnity under the intellectual property rights of Lenovo or third parties. All information contained in this document was obtained in specific environments and is presented as an illustration. The result obtained in other operating environments may vary. Lenovo may use or distribute any of the information you supply in any way it believes appropriate without incurring any obligation to you.

Any references in this publication to non-Lenovo Web sites are provided for convenience only and do not in any manner serve as an endorsement of those Web sites. The materials at those Web sites are not part of the materials for this Lenovo product, and use of those Web sites is at your own risk. Any performance data contained herein was determined in a controlled environment. Therefore, the result obtained in other operating environments may vary significantly. Some measurements may have been made on development-level systems and there is no guarantee that these measurements will be the same on generally available systems. Furthermore, some measurements may have been estimated through extrapolation. Actual results may vary. Users of this document should verify the applicable data for their specific environment.

© Copyright Lenovo 2023. All rights reserved.

This document, LP1237, was created or updated on May 23, 2023.

Send us your comments in one of the following ways:

- Use the online Contact us review form found at:
  https://lenovopress.lenovo.com/LP1237
- Send your comments in an e-mail to:
  comments@lenovopress.com

This document is available online at https://lenovopress.lenovo.com/LP1237.

Trademarks

Lenovo and the Lenovo logo are trademarks or registered trademarks of Lenovo in the United States, other countries, or both. A current list of Lenovo trademarks is available on the Web at https://www.lenovo.com/us/en/legal/copytrade/.

The following terms are trademarks of Lenovo in the United States, other countries, or both:
Lenovo®
AnyBay®
Bootable Media Creator
Flex System
Lenovo Services
RackSwitch
ServerProven®
System x®
ThinkServer®
ThinkSystem®
TopSeller
TruDDR4
UpdateXpress System Packs
XClarity®

The following terms are trademarks of other companies:

Intel®, Intel Optane™, and Xeon® are trademarks of Intel Corporation or its subsidiaries.

Linux® is the trademark of Linus Torvalds in the U.S. and other countries.

ActiveX®, Microsoft®, PowerShell, Windows PowerShell®, Windows Server®, and Windows® are trademarks of Microsoft Corporation in the United States, other countries, or both.

SPECpower® is a trademark of the Standard Performance Evaluation Corporation (SPEC).

Other company, product, or service names may be trademarks or service marks of others.