Lenovo ThinkSystem SR950 Server (Xeon SP Gen 2)
Product Guide

The Lenovo ThinkSystem SR950 server is designed for your most demanding, mission-critical workloads, such as in-memory databases, large transactional databases, batch and real-time analytics, ERP, CRM, and virtualized server workloads. Now supporting second-generation Intel Xeon Scalable Family processors, the powerful 4U ThinkSystem SR950 can grow from two to eight processors, and with 96 DIMM sockets, supports up to 24 TB of high-speed memory. The SR950 also now supports Intel Optane DC Persistent Memory for the ultimate in performance. The modular design of SR950 speeds upgrades and servicing with easy front or rear access to all major subsystems to maximize server availability.

The SR950 packs numerous fault-tolerant and high-availability features into a high-density, 4U rack-optimized design that reduces the space needed to support massive network computing operations and simplify servicing.

The following figure shows the Lenovo ThinkSystem SR950.



Figure 1. Lenovo ThinkSystem SR950

Did you know?

The SR950 server supports up to eight processors in a single 4U chassis. You can upgrade from a 2-socket system to an 8-socket system without having to replace the server enclosure or upgrade to a physically larger design. The SR950 offers enterprise scalability and advanced RAS features to support the most demanding mission-critical applications that require 24x7 operations.

Key features

The Lenovo ThinkSystem SR950 server is designed for your most demanding, CPU and memory intensive, mission-critical workloads, such as in-memory databases, large transactional databases, batch and real-time analytics, ERP, CRM, and virtualized server workloads. The powerful 4U ThinkSystem SR950 can grow from two to eight second-generation Intel Xeon Processor Scalable Family CPUs, delivering up to 36% total performance improvement over the first generation processor (based on Intel internal testing). The modular design of SR950 speeds upgrades and servicing with easy front and rear access to all major subsystems, to maximize server uptime.

Scalability and performance

The SR950 offers numerous features to boost performance, improve scalability, and reduce costs:

- Supports second-generation Intel Xeon Processor Scalable processors
- Dense server offering where up to 8 processors and 96 DIMMs are housed in only 4U of rack space.
- Offers a simple upgrade path that enables the server to be initially configured with as few as two processors and then later be upgraded to up to eight processors simply by adding a compute tray and system boards.
- Supports the Gold and Platinum level processors in the Intel Xeon Processor Scalable Family, including the "top bin" highest-performing 205 W processors available from Intel.
- Up to eight processors, each with up to 28 cores and 56 threads (for a total of up to 448 threads) to maximize the concurrent execution of multithreaded applications.
- Intelligent and adaptive system performance with Intel Turbo Boost Technology 2.0 allows processor cores to run at maximum speeds during peak workloads by temporarily exceeding processor TDP.
- Intel Hyper-Threading Technology boosts performance for multithreaded applications by enabling simultaneous multithreading within each processor core, up to two threads per core.
- Intel Virtualization Technology integrates hardware-level virtualization hooks that allow operating system vendors to better use the hardware for virtualization workloads.
- Intel Speed Select Technology provides improvements in server utilization and guaranteed per-core performance service levels with more granular control over processor performance.
- Intel Deep Learning Boost (Vector Neural Network Instruction set or VNNI) is designed to deliver significant, more efficient Deep Learning (Inference) acceleration for high-performance Artificial Intelligence (AI) workloads.
- Intel Advanced Vector Extensions 512 (AVX-512) enable acceleration of enterprise-class workloads, including databases and enterprise resource planning (ERP).
- Support for up to 96 TruDDR4 DIMMs operating at up to 2933 MHz means you have the fastest available memory subsystem and memory capacity of up to 24 TB using 96x 256 GB 3DS RDIMMs.
- Supports 2933 MHz Performance+ memory DIMMs which allow configurations of 2 DIMMs per channel to operate at the 2933 MHz rated memory speed.
- Supports the new Intel Optane DC Persistent Memory; up to 48 Data Center Persistent Memory Modules (DCPMMs) can be installed in conjunction with regular system memory. DCPMMs are up to 512 GB each, for a total of up to 24 TB of Persistent Memory.
- With both Persistent Memory and RDIMMs installed, the server supports up to a total of 36 TB of memory, 24 TB of Persistent Memory + 12 TB of regular system memory.
- Up to 24x 2.5-inch HDDs or SSDs provide a flexible and scalable all-in-one platform to meet your increasing demands.
- Of the 24x drive bays, support for up to 12 NVMe PCIe SSDs maximizes drive I/O performance, in terms of throughput, bandwidth, IOPS, and latency.
- The use of solid-state drives (SSDs) instead of, or along with, mechanical hard disk drives (HDDs), can improve I/O performance. An SSD can support up to 100 times more I/O operations per second

(IOPS) than a typical HDD.

- New high-speed RAID controllers provide 12 Gb SAS connectivity to the drive backplanes. A variety of RAID adapters are available, with cache up to 8 GB and support for 12 drives on a single controller.
- Supports the Lenovo-patented M.2 adapter design for convenient operating system boot functions. Available M.2 adapters support either one M.2 drive, or two M.2 drives in a RAID 1 configuration, for the boot drive performance and reliability.
- The server has a dedicated flexible LAN-on-motherboard (LOM) slot offering a variety of 10 GbE or Gigabit Ethernet adapters that do not occupy one of the standard PCIe slots.
- A total of up to 17 rear-accessible PCIe slots: 14 general-purpose PCIe 3.0 slots plus slots dedicated to the LOM adapter and two ML2 adapters. In addition, the server has two internal slots for RAID or HBA adapters.
- The server offers PCI Express 3.0 I/O expansion capabilities that improve the theoretical maximum bandwidth by almost 100% (8 GTps per link using 128b/130b encoding) compared to the previous generation of PCI Express 2.0 (5 GTps per link using 8b/10b encoding).

Availability and serviceability

The SR950 is based on a modular service model where all components and options can be removed from the front or rear of the system, even parts that are located in the center of the machine such as fans, memory DIMMs, and processors. The SR950 is designed for 99.99% availability.

Watch the following video to show how easy it is to service the SR950 server:
https://lenovopress.com/lp0899-thinksystem-sr950-ease-of-service-video

The SR950 provides many features to simplify serviceability and increase system uptime:

- The server offers Single Device Data Correction (SDDC, also known as Chipkill), Adaptive Double-Device Data Correction (ADDDC, also known as Redundant Bit Steering or RBS), memory mirroring, and memory rank sparing for redundancy in the event of a non-correctable memory failure.
- The server offers hot-swap drives, supporting RAID redundancy for data protection and greater system uptime.
- The Dual M.2 Boot Adapter uses RAID-1 so that the two M.2 drives installed are configured as a redundant pair.
- The server has up to four hot-swap N+N redundant power supplies to help keep the server operational in the event of a power supply or utility supply failure.
- Each compute tray has 6 hot-swap N+1 redundant fans (a total of 12 fans when two compute trays are installed) to maximize availability for business-critical applications.
- The power source-independent light path diagnostics functionality provides individual light path LEDs that lead the technician to failed (or failing) components, which simplifies servicing, speeds up problem resolution, and helps increase system availability.
- The included LCD system information display panel provides greater diagnostic function by listing all error messages and VPD data needed for a service call, thereby speeding problem resolution and increasing system uptime.
- Proactive Platform Alerts (including PFA and SMART alerts): Processors, voltage regulators, memory, internal storage (SAS/SATA HDDs and SSDs, NVMe SSDs, M.2 storage, and flash storage adapters), fans, power supplies, RAID controllers, ambient temperature, and subcomponent temperatures. Alerts can be surfaced through the XClarity Controller to managers such as Lenovo XClarity Administrator, VMware vCenter, and Microsoft System Center. These proactive alerts let you take appropriate actions in advance of possible failure, thereby increasing server uptime and application availability.
- Solid-state drives (SSDs) offer more reliability than mechanical HDDs for greater uptime.
- The built-in XClarity Controller continuously monitors system parameters, triggers alerts, and

performs recovery actions in case of failures to minimize downtime.

- Built-in diagnostics in UEFI, using Lenovo XClarity Provisioning Manager, speed up troubleshooting tasks to reduce service time.
- Lenovo XClarity Provisioning Manager supports diagnostic functions and collects service data to USB key drive or remote CIFS share folder for troubleshooting, to reduce servicing time.
- Auto-restart in the event of a momentary loss of AC power (based on power policy setting in the XClarity Controller service processor).
- Support for the XClarity Administrator Mobile app running on a supported smartphone and connected to the server through the service-enabled USB port, enables additional local systems management functions.
- Three-year or one-year customer-replaceable unit and onsite limited warranty, 9 x 5 next business day. Optional service upgrades are available.

Manageability and security

Powerful systems management features simplify local and remote management of the SR950:

- The server includes an XClarity Controller (XCC) to monitor server availability and perform remote management. XCC Enterprise is included as standard, which enables remote KVM and remote media files (ISO and IMG image files), boot capture, and power capping.
- Lenovo XClarity Administrator offers comprehensive hardware management tools that help to increase uptime, reduce costs, and improve productivity through advanced server management capabilities.
- New UEFI-based Lenovo XClarity Provisioning Manager, accessible from F1 during boot, provides system inventory information, graphical UEFI Setup, platform update function, RAID Setup wizard, operating system installation function, and diagnostic functions.
- Support for Lenovo XClarity Energy Manager which captures real-time power and temperature data from the server, and provides automated controls to lower energy costs.
- Integrated Trusted Platform Module (TPM) 2.0 support enables advanced cryptographic functionality, such as digital signatures and remote attestation.
- Supports Secure Boot to ensure that only a digitally signed operating system can be used. Supported with HDDs and SSDs as well as M.2 drives in the M.2 Adapter.
- Industry-standard Advanced Encryption Standard (AES) NI support for faster, stronger encryption.
- Intel Execute Disable Bit functionality can prevent certain classes of malicious buffer overflow attacks when combined with a supported operating system.
- Intel Trusted Execution Technology provides enhanced security through hardware-based resistance to malicious software attacks, allowing an application to run in its own isolated space, protected from all other software running on a system.

Energy efficiency

The SR950 offers the following energy-efficiency features to save energy, reduce operational costs, and increase energy availability:

- The server can be used in environments up to ASHRAE A4 with ambient temperatures up to 45 °C.
- The server is Energy Star 3.0 compliant.
- Energy-efficient planar components help lower operational costs.
- High-efficiency power supplies with 80 PLUS Platinum certifications
- Intel Intelligent Power Capability powers individual processor elements on and off as needed, to reduce energy draw.
- Low-voltage 1.2 V DDR4 memory offers energy savings compared to 1.35 V and 1.5 V DDR3 DIMMs.

- Solid-state drives (SSDs) consume as much as 80% less power than mechanical 2.5-inch HDDs.
- The server uses hexagonal ventilation holes, which can be grouped more densely than round holes, providing more efficient airflow through the system.
- Optional Lenovo XClarity Energy Manager provide advanced data center power notification, analysis, and policy-based management to help achieve lower heat output and reduced cooling needs.

Components and connectors

The following figure shows the front of the SR950 server.

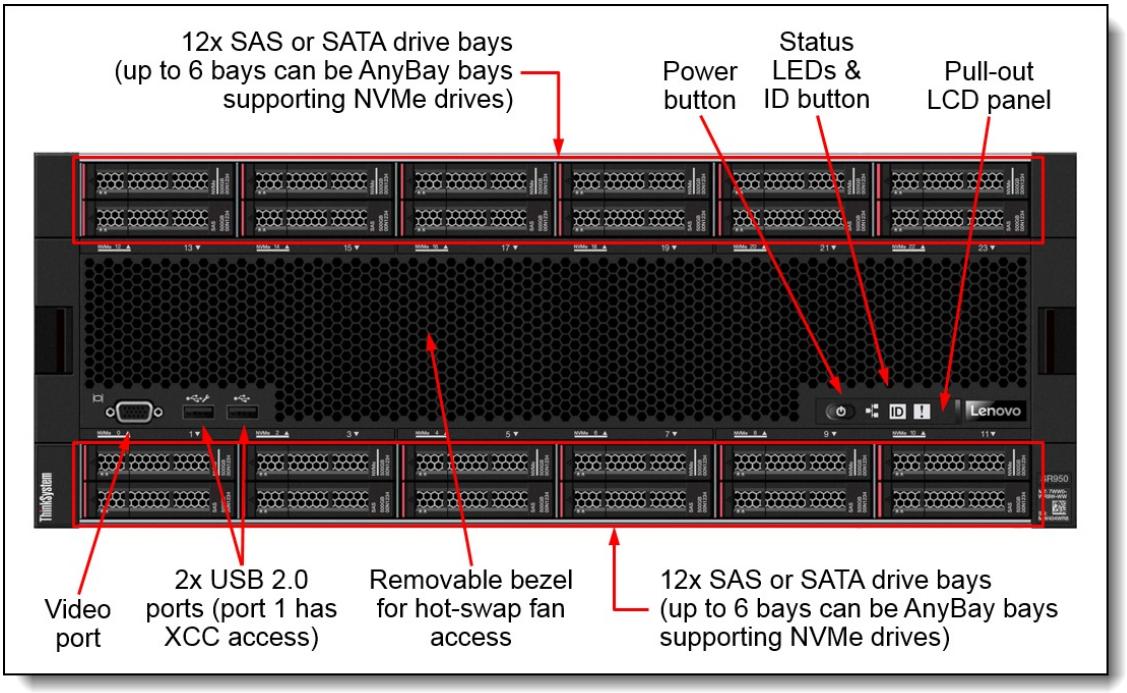

Figure 2. Front view of the Lenovo ThinkSystem SR950

The following figure shows the rear of the SR950 server. The server has up to 17 PCIe slots, depending on the riser cards selected, and the number of processors installed.

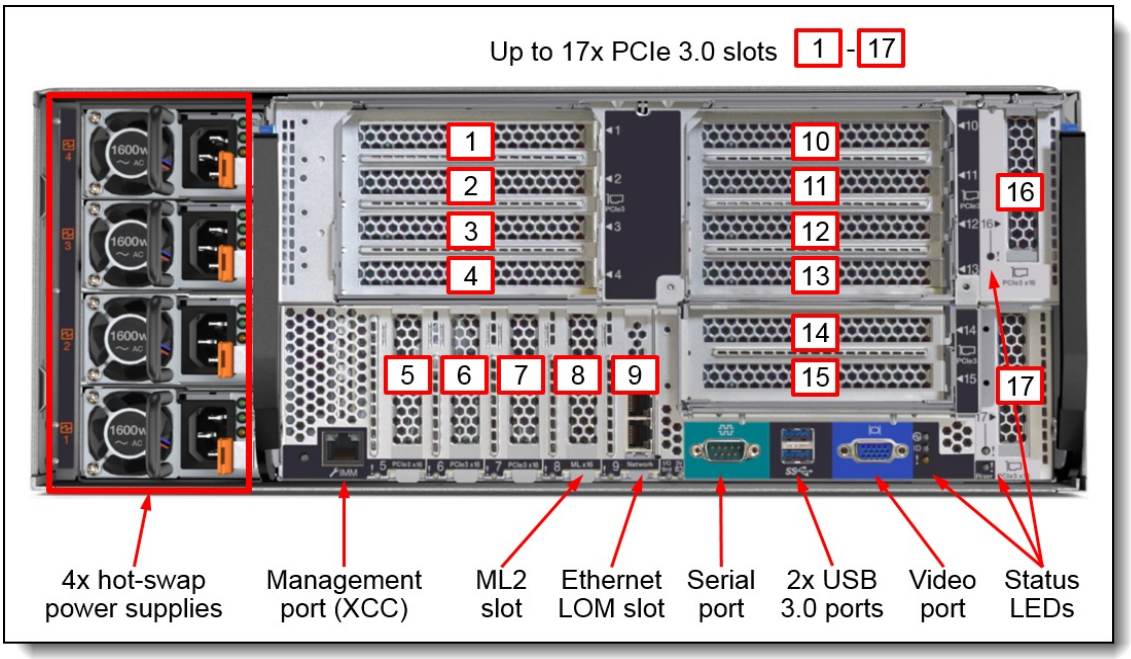

Figure 3. Rear view of the Lenovo ThinkSystem SR950

The processors and other components are located on compute trays, the Upper Compute Tray and the Lower Compute Tray. Each compute tray holds up to four processors on two system boards. The compute trays are accessible from the front of the server, as shown in the following figure.

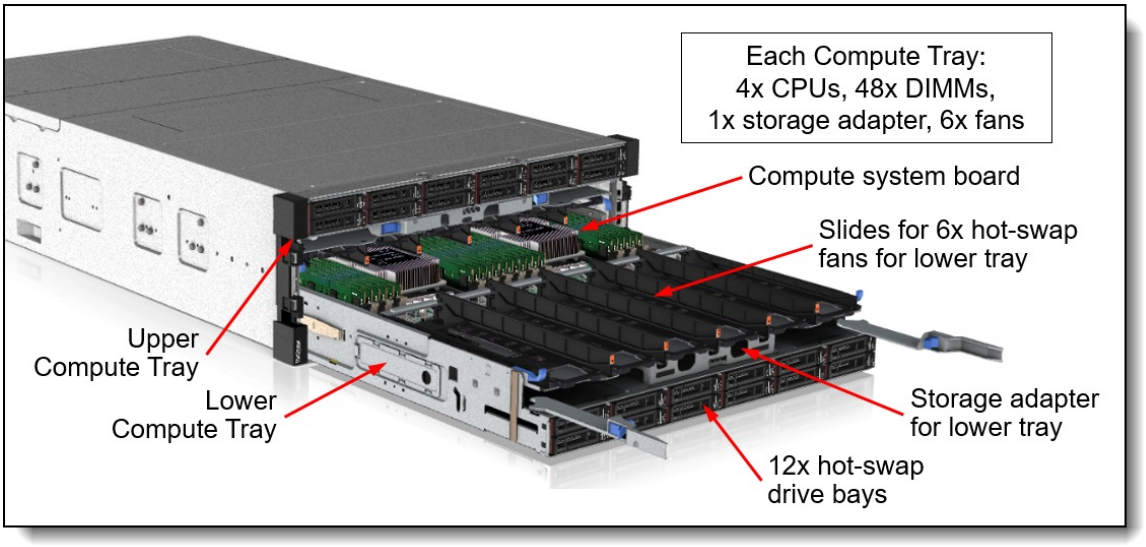

Figure 4. Lower Compute Tray partially removed

The server has one or two compute trays. Each compute tray contains:

- One or two compute system boards, each comprising:
  - Two processors
  - 24 DIMMs
- Six hot-swap fans, accessible even when the compute tray is installed
- 12x 2.5-inch hot-swap drive bays
- One PCIe slot reserved for a RAID adapter for internal SAS/SATA drives

The following figure shows the rear of the compute tray with its two compute system boards, one of them removed.

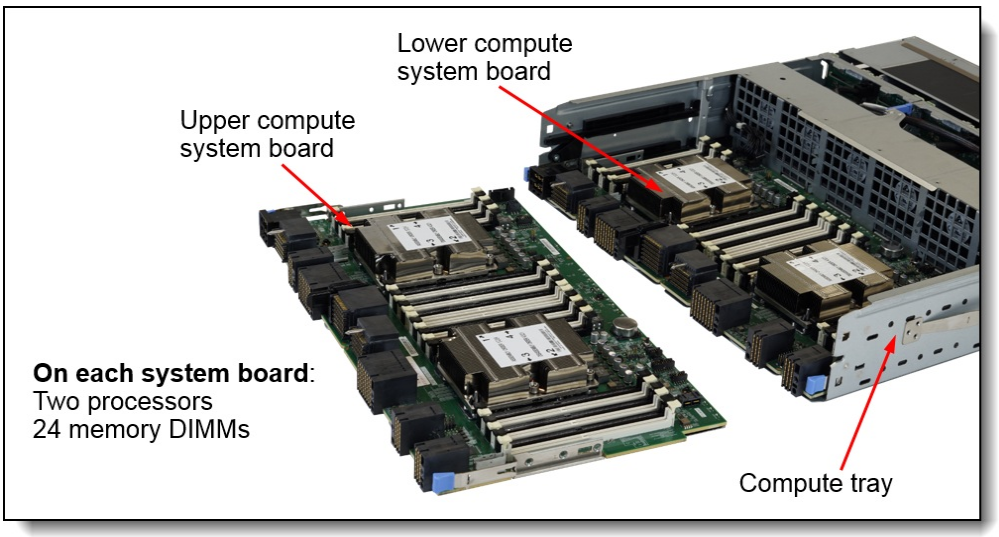

Figure 5. Compute tray with two compute system boards

The compute system board is shown in the following figure. Each system board holds two processors and 24 DIMM sockets, 12 per processor. The system board also has connections for the NVMe ports used to connect to the PCIe NVMe drive bays at the front of the server.

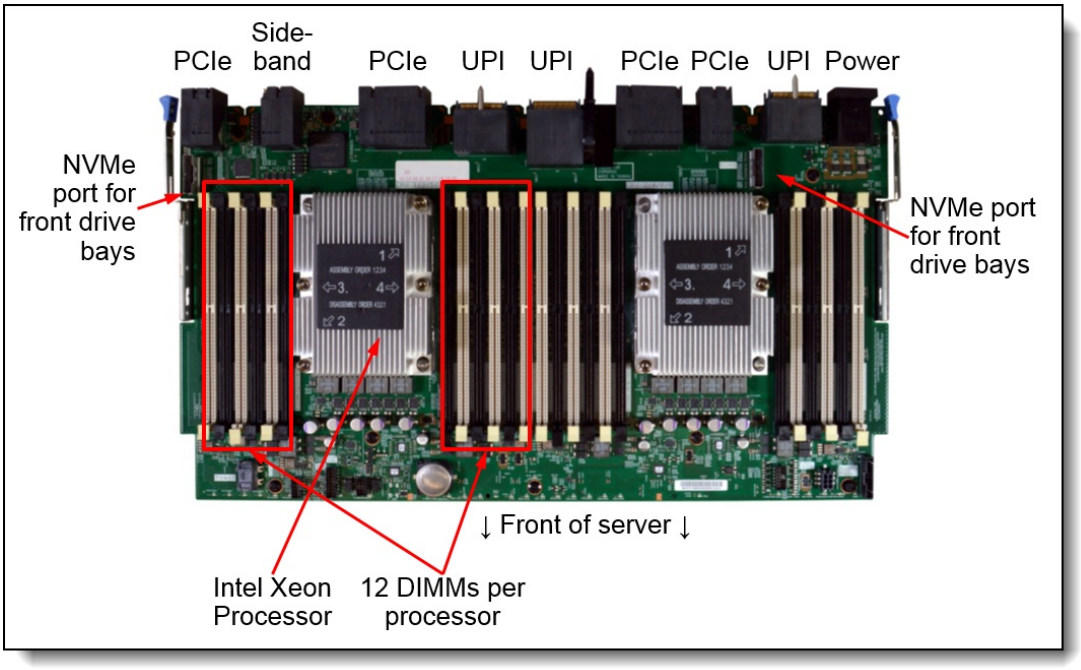

Figure 6. Compute system board

Processors installed in the compute system boards are numbered as shown in the following figure.

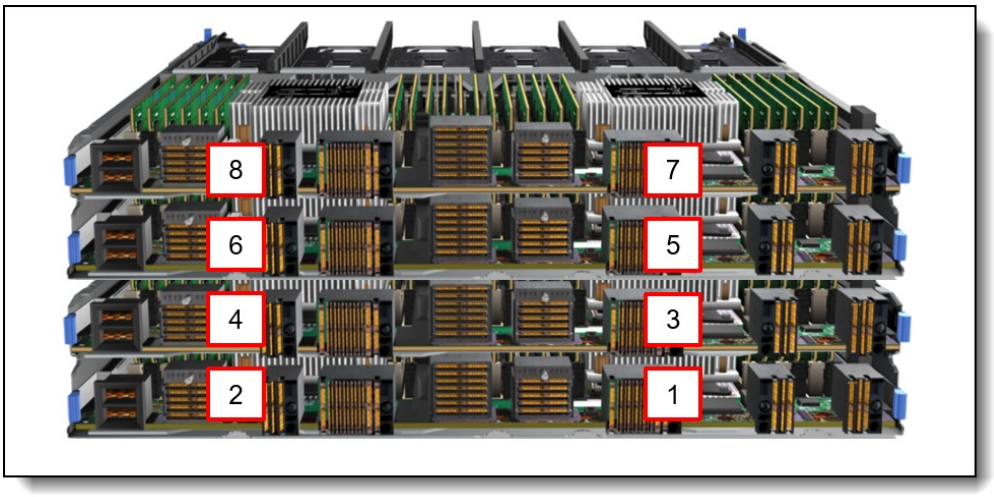

Figure 7. Processor numbering (viewed from the rear of the compute trays)

For some four-socket storage-rich configurations, a storage tray is used in the upper tray area instead of a compute tray. The following figure shows the key components of the storage tray.

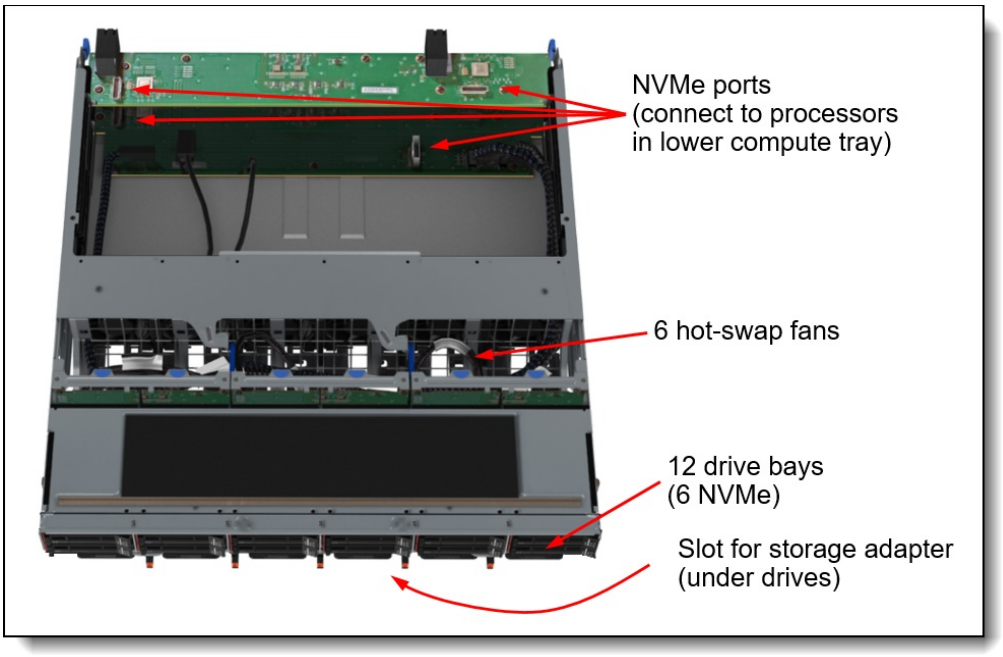

Figure 8. Storage tray

All slots and ports at the rear of the server are housed in the I/O tray as shown in the following figure.

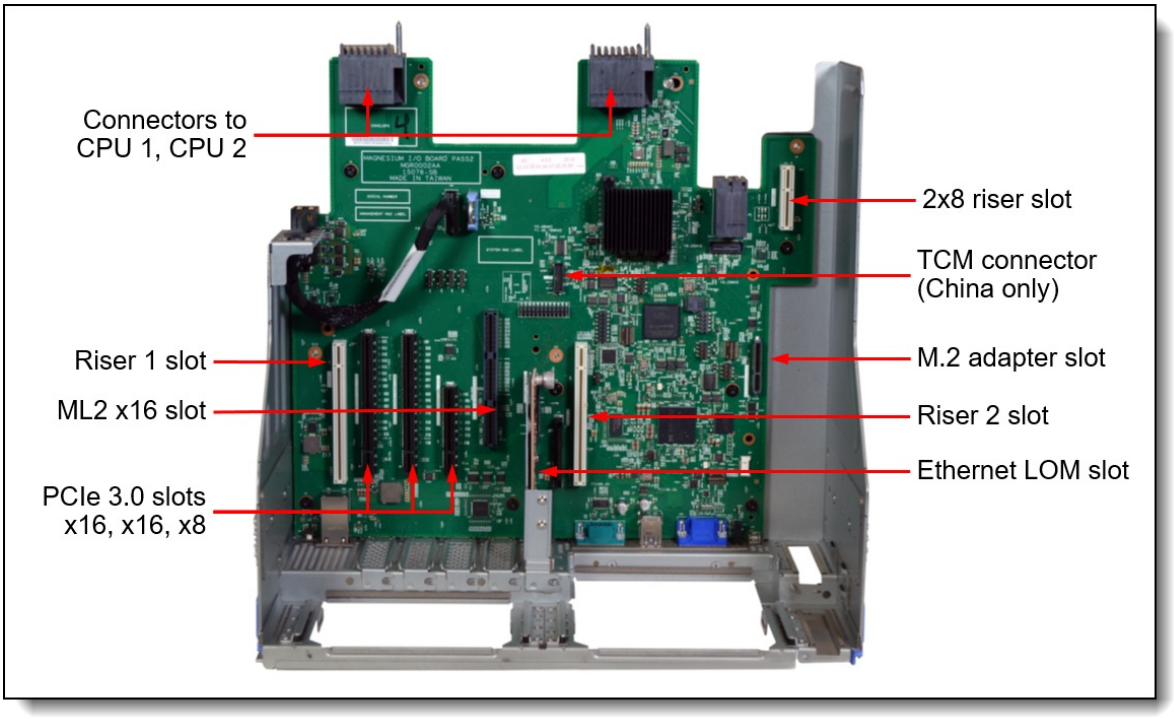

Figure 9. I/O tray

System architecture

The following figure shows the architecture of the SR950 at a high level. The system boards with processors and memory are installed in compute trays along with the drive bays and storage adapter. The I/O board houses all onboard PCIe slots as well as the slots for the riser cards the offer the remaining PCIe slots.

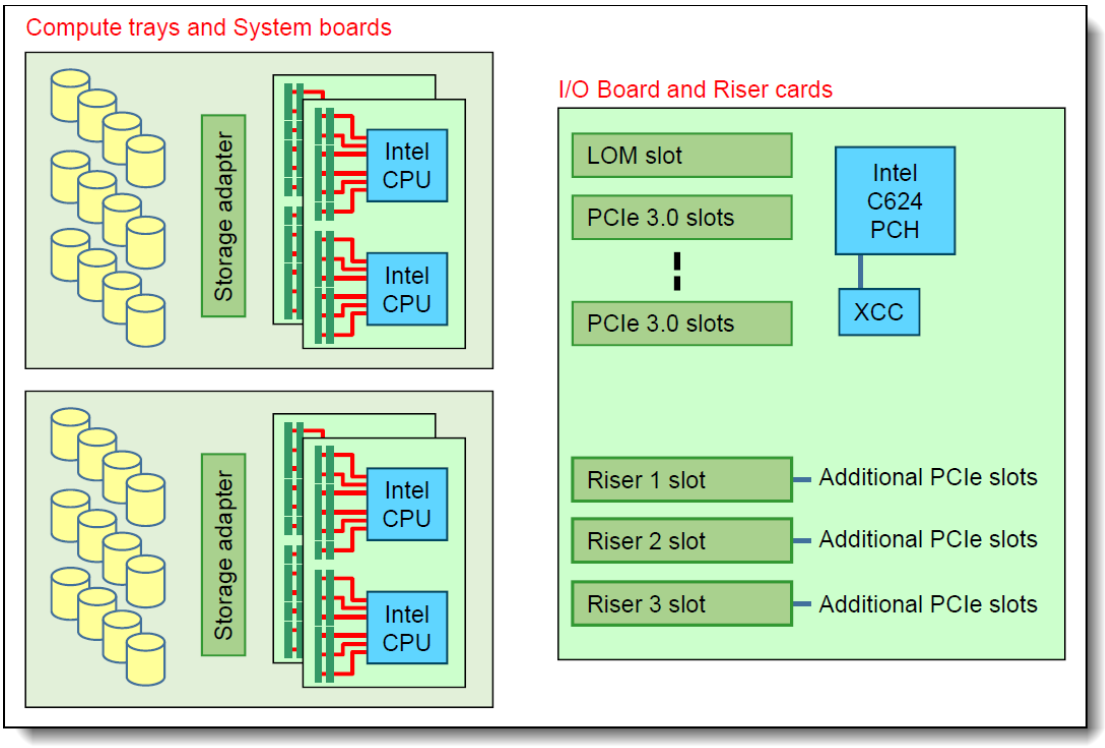

Figure 10. SR950 architecture

The specific connections between system boards, processors and PCIe slots are dependent on the server configuration. This is described in detail in the Server configurations section. Specific processor-slot connections based on each configuration are described in the Slot availability by server configuration section.

The following figure shows System board 1 where processors 1 and 2 are installed. The slots on the I/O board are connected directly to these processors (or indirectly through the Intel C624 Platform Controller Hub, PCH).

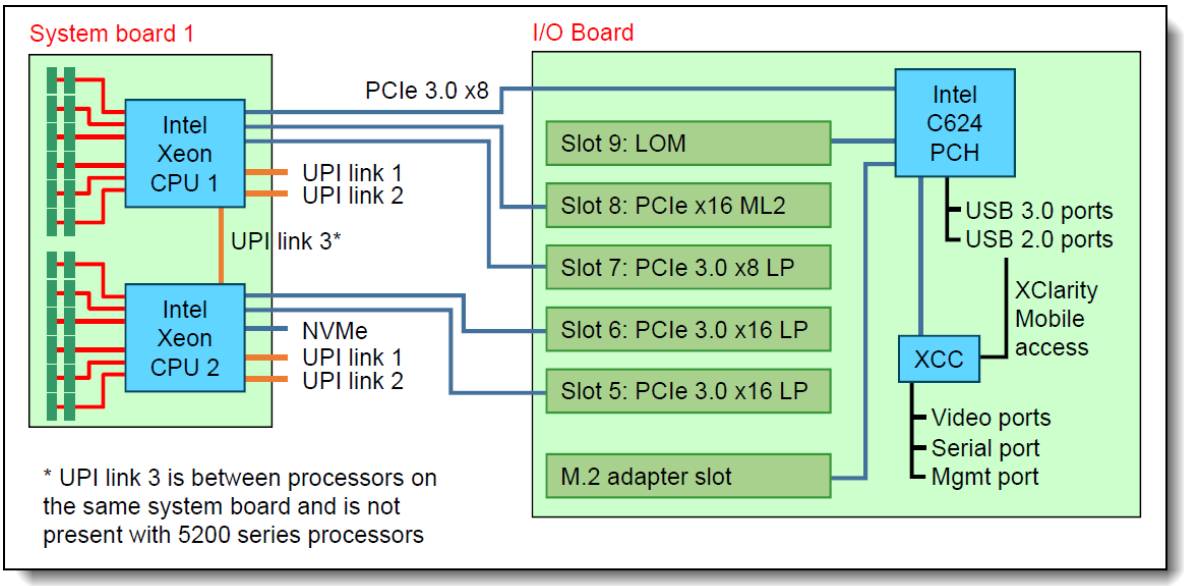

Figure 11. System board 1 connections to the I/O board

The processors within the chassis communicate via UltraPath Interconnect (UPI) ports. These ports allow high speed communication between the CPUs. UPI replaces the Intel QuickPath Interconnect (QPI). One UPI link connects the two processors on each system board (UPI 3) and the other two UPI links are used to connect the other processors in adjacent boards to form four-way and larger systems.

In four-processor configurations, the design of the UPI links is either in a mesh or a ring topology. When a processor has 3 UPI ports, it can be used in a 4-socket mesh configuration where all processors are directly connected to every other processor. 5200 Series processors only have 2 UPI ports (ports 1 and 2) and therefore do not support mesh topology. These two UPI configurations are shown in the following figure.

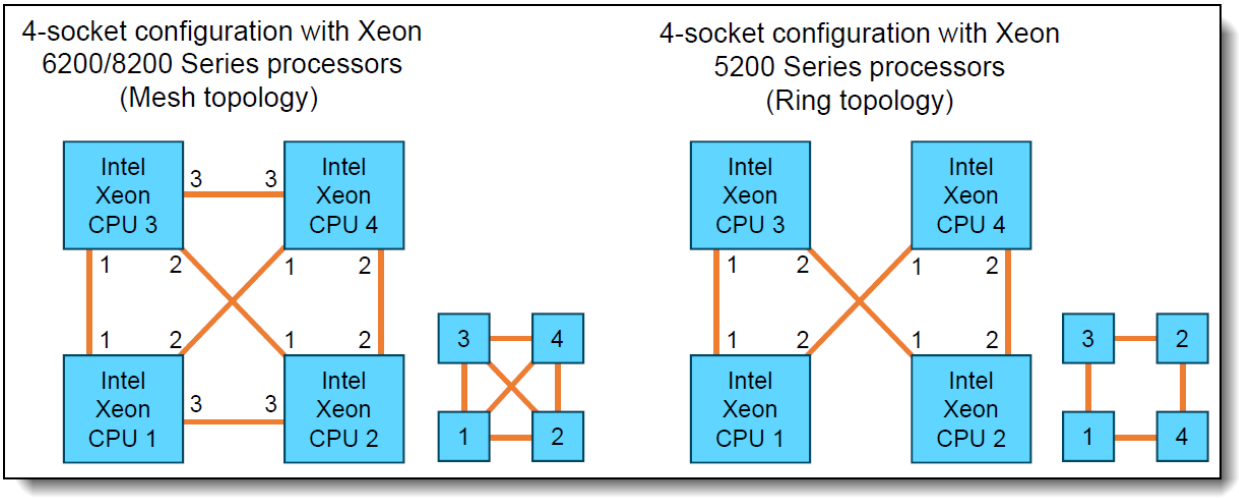

Figure 12. Mesh (left) and Ring (right) topologies for four-socket configurations

Ring topology with 8200 Series processors: As discussed in the Server configurations section, the “Four-Socket Upgradable / Storage Rich” configuration is a four-socket configuration that uses a Ring topology but uses 8200 Series processors.

The server supports an 8-socket configuration (8200 Series processors required). The following figure shows the UPI links used to connect eight processors.

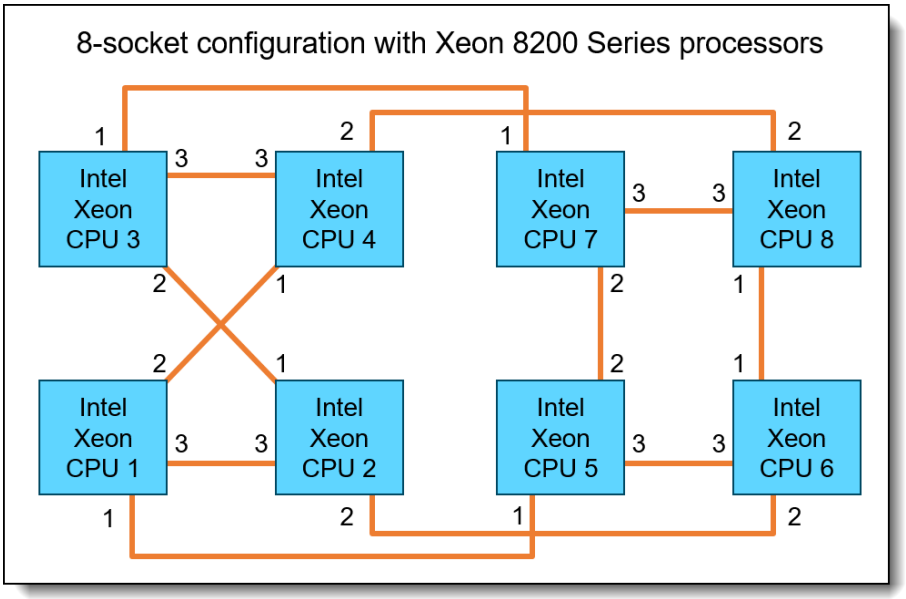

Figure 13. 8-socket topology

Refer to the processor options table for information on the number UPI links each processor option has for the SR950 system.

Server configurations

The SR950 supports five different configurations, depending on the desired number of processors, drive bays, PCIe slots, and upgradability to an 8-socket configuration.

Notes:

- The configurations listed here represent Lenovo's recommendations regarding the selection of compute system boards, I/O riser cards, and NVMe drive bays to maximize the available resources. You can select fewer drives and lower slot counts by using lower-slot-count riser cards to meet application requirements.
- The use of only two, three or six processors in configurations where supported will reduce the available I/O slots and NVMe drive bays. This is described in details in the Internal storage section and the I/O expansion options section.
- Configurations 1 and 2 support either two, three or four processors, however the use 5200 Series processors requires that four processors be selected. Two or three 5200 Series processors are not supported in these configurations due to the way the processors are connected.
- Configurations 3 and 4 are designed to be easily upgradable to 8 processors. As a result, 8200 Series processors are required.

When building a server in the configurator, the feature codes in the following table are key to selecting the right configuration.

Table 1. Feature codes for selecting base server configurations

Part number	Feature code	Description
CTO only	BMQC	SR950 2S to 8S Base v2 (Upgrade to 8S using the 4S Performance to 8S upgrade kit)
CTO only	AUNY	SR950 2S to 4S Base (Upgrade to 8S using the 4S Performance to 8S upgrade kit)
CTO only	BMQE	SR950 2S to 4S Base v2 (Simple upgrade without needing the upgrade kit)
CTO only	AUKF	SR950 2S to 8S Base (Simple upgrade without needing the upgrade kit)
CTO only	AX3Y	12 Hard Drive Maximum System
CTO only	AX3Z	24 Hard Drive Maximum System

Upgrades: Configurations 1-4 can be upgraded to an 8-socket configuration (Configuration 5) as described in the Server configuration upgrades section.

Table 2. Server configurations

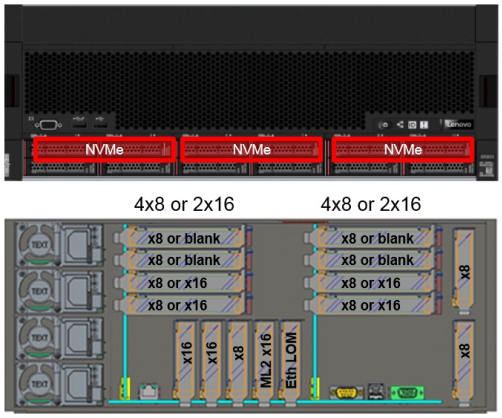	**Configuration 1. Four-Socket Performance** The highest-performing 4-socket server, at the lowest cost, when up to 12 drives is enough, and without the need for a simple upgrade. • Supports 2, 3 or 4 processors (if using 5200 Series processors, 4 processors must be selected). • 4 sockets configured in mesh topology for best performance. • 12 drive bays, 6 of which support NVMe drives (4 NVMe with 3 processors, and 2 NVMe with 2 processors). • 15 rear PCIe slots with 4 processors (10 rear slots with 3 processors, and 6 rear slots with 2 processors). • Filler installed in the upper tray area. • Can be upgraded to 8S but requires the 4S Performance to 8S Upgrade Kit, additional components, and Lenovo hardware installation. • Select feature codes AUNY and AX3Y.
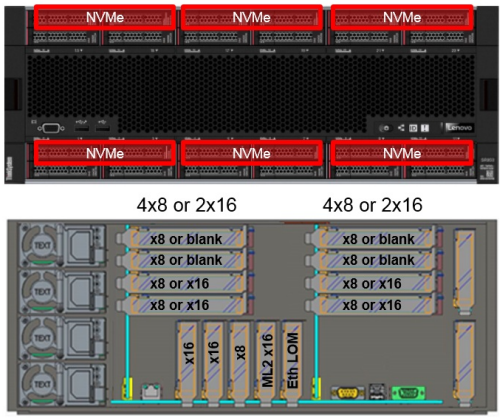	**Configuration 2. Four-Socket Performance/ Storage Rich** The highest-performing 4-socket server, when needing more than 12 drives without the need for a simple upgrade. • Supports 2, 3 or 4 processors (if using 5200 Series processors, 4 processors must be selected). • 4 processors configured in mesh topology for best performance. • 24 drives, 12 of which support NVMe drives (8 NVMe with 3 processors, and 4 NVMe with 2 processors). • 13 rear PCIe slots with 4 processors (9 rear slots with 3 processors, and 5 rear slots with 2 processors). • Storage tray installed in the upper tray area. • Can be upgraded to 8S but requires the 4S Performance to 8S Upgrade Kit, additional components, and Lenovo hardware installation. • Select feature codes AUNY and AX3Z.

<table>
<tr>
<td>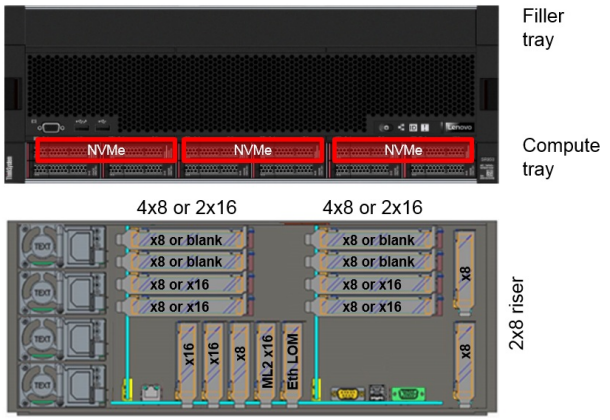
</td>
<td>Configuration 3. Four-Socket Upgradable

The lowest-cost 4-socket server capable of a simple upgrade to 8 socket, and when 12 drive bays with 4 processors is enough storage.

• 2 or 4 processors, must be 8200 Series processors.
• 4 processors in a ring topology.
• 12 drive bays including up to 6 NVMe (2 NVMe with 2 processors).
• Up to 15 rear PCIe slots with 4 processors (6 rear slots with 2 processors).
• Filler installed in the upper tray area.
• Upgradable to 8-socket with an additional compute tray and two system boards.
• Once upgraded, the system will have 24 drive bays.
• Select feature codes AUKF and AX3Y.</td>
</tr>
<tr>
<td>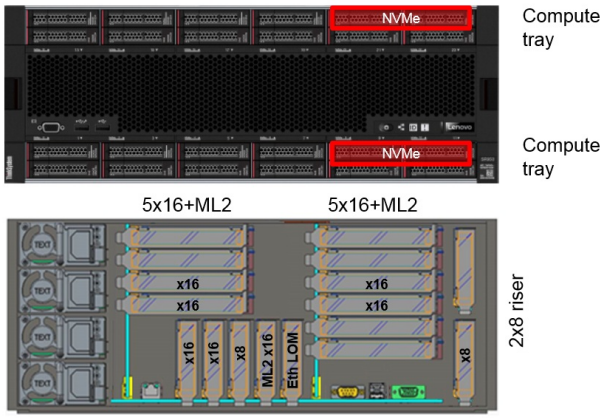
</td>
<td>Configuration 4. Four-Socket Upgradable / Storage Rich

4-socket server capable of a simple upgrade to 8-socket, and needing more than 12 drive bays with 4 processors.

• Requires 4 processors, must be 8200 Series.
• 4 processors in a ring topology.
• 24 drive bays (including up to 4 NVMe).
• 10 rear PCIe slots.
• Two compute trays, with one system board in each tray.
• Upgradable to 8-socket with two additional system boards.
• Once upgraded, the server will support 12 NVMe drives.
• Select feature codes AUKF and AX3Z.</td>
</tr>
<tr>
<td>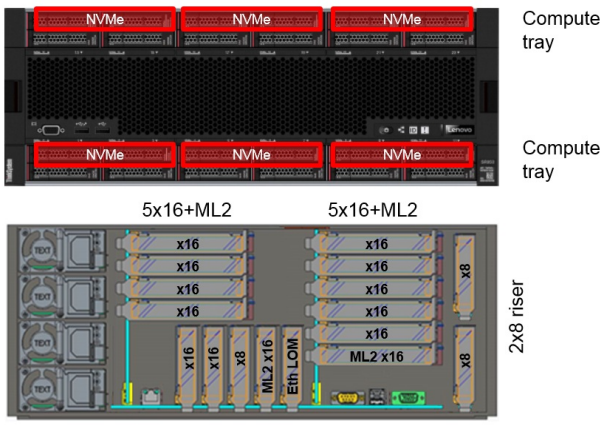
</td>
<td>Configuration 5. Eight-Socket Storage Rich

Full featured 6- or 8-socket server with up to 24 drive bays, and the maximum number of PCIe x16 slots.

• Requires 6 or 8 processors, must be 8200 Series.
• 24 drive bays, 12 of which support NVMe drives (8 NVMe with 6 processors).
• 17 rear PCIe slots (13 rear slots with 6 processors installed).
• Two compute trays each with two system boards.
• Select feature codes AUKF and AX3Z.</td>
</tr>
</table>

The following table summarizes the configurations.

Table 3. SR950 server configurations

Configuration	Supported processors	Lower Tray	Upper Tray	Processor Topology	Maximum storage	Maximum PCIe slots	Upgrade to 8S?
4S Performance	2 or 4 Any processor†	Compute Tray	Filler	4S Mesh*	12 drives (6 NVMe)	15	Yes‡
4S Performance/ Storage Rich	4 Any processor	Compute Tray	Storage Tray	4S Mesh*	24 drives (12 NVMe)	13	Yes‡
4S Upgradable	2 or 4 8200 Series only	Compute Tray	Filler	4S Ring	12 drives (6 NVMe)	15	Yes**
4S Upgradable/ Storage Rich	4 8200 Series only	Compute Tray with 1 system board	Compute Tray with 1 system board	4S Ring	24 drives (4 NVMe)	10	Yes**
8S Storage Rich	8 8200 Series only	Compute Tray	Compute Tray	8S	24 drives (12 NVMe)	17	Not applicable

† If using 5200 Series processors, then 4 processors must be selected. Using two 5200 Series processors is not supported.
* Mesh topology requires a processor with 3 UPI connections; Processors such as the 5200 series with only 2 UPI connections will operate in Ring topology. See the table in the Processor options section.
‡ Upgrade requires the ThinkSystem SR950 4S Performance to 8S Upgrade Kit, 4TA7A10969. See the Server configuration upgrades section below.
** After upgrade, maximum storage will be 24 drives (12 NVMe), and up to 17 total PCIe slots available (may require replacement riser cards)

For details about PCIe slot availability based on each server configuration, see Slot availability by server configuration.

Server configuration upgrades

This section describes the system upgrades you can perform in the field. The upgrades are based on the configurations that are described in the Server configurations section.

Key components in the upgrades are listed in the following table.

Table 4. System upgrades

Part number	Feature code	Description
4TA7A10969	Various	ThinkSystem SR950 4S Performance to 8S Upgrade Kit
7XG7A03955	B4Y1	ThinkSystem SR950 2-CPU, 24 DIMM Compute System Board
4C87A80579	Various	ThinkSystem SR950 Upper Compute Tray Kit with 19k fans, 6-8S Upgrade Gen2 v2
4C87A37049	Various	ThinkSystem SR950 Upper Compute Tray Kit with 19k fans, 6-8S Upgrade Gen2

4S Performance to 8S Upgrade Kit, 4TA7A10969, includes the following components:

- 4 mid-plane UPI & sideband interconnects

The Compute System Board option, 7XG7A03955, includes the following components:

- One compute system board v2, without processors or memory

The Upper Compute Tray Kit, 4C87A37049, includes the following components:

- 1x compute tray with 12 drive bays and 1 slot for storage adapter
- 6x 19K RPM system fans
- 1x compute system board
- 3x 4-bay drive bay fillers

Note: The Upper Compute Tray Kit does not include drive backplanes

The following table describes the before and after configurations and the components you will need to order to achieve the desired configuration.

Table 5. Upgrades to Server configurations (See Server configurations section for configuration definitions)

Initial configuration	Desired upgraded configuration	Parts to order and install
Configuration 1 (Four-Socket Performance) 2 processors installed	**Configuration 1** (Four-Socket Performance) 4 processors installed	• 1x Compute System Board, 7XG7A03955 • 2x processor options (match installed) • Memory DIMMs (matching installed is recommended)
Configuration 1 (Four-Socket Performance) 3 processors installed	**Configuration 1** (Four-Socket Performance) 4 processors installed	• 1x processor option (match installed) • Memory DIMMs (matching installed is recommended)
Configuration 1 (Four-Socket Performance) 4 processors installed (Includes SAP HANA models and configurations)	**Configuration 5** (Eight-Socket Storage Rich) 8 processors installed	• 1x 4S Performance to 8S Upgrade Kit, 4TA7A10969 • 1x Upper Compute Tray Kit v2, 4C87A37049* • 1x Compute System Board, 7XG7A03955 • 4x 82xx processor options (match installed)** • Memory DIMMs (matching installed is recommended) • Drive backplanes for upper compute tray • RAID adapter or HBA for upper compute tray • Drives for upper compute tray • Additional/replacement PCIe riser cards • Lenovo Basic Hardware Installation services
Configuration 2 (Four-Socket Performance/ Storage Rich) 4 processors installed (Includes customized SAP HANA models)	**Configuration 5** (Eight-Socket Storage Rich) 8 processors installed	
Configuration 2 (Four-Socket Performance/ Storage Rich) 2 processors installed	**Configuration 2** (Four-Socket Performance/ Storage Rich) 4 processors installed	• 1x Compute System Board, 7XG7A03955 • 2x processor options (match installed) • Memory DIMMs (matching installed is recommended)
Configuration 2 (Four-Socket Performance/ Storage Rich) 3 processors installed	**Configuration 2** (Four-Socket Performance/ Storage Rich) 4 processors installed	• 1x processor option (match installed) • Memory DIMMs (matching installed is recommended)
Configuration 3 (Four-Socket Upgradable) 2 processors installed	**Configuration 3** (Four-Socket Upgradable) 4 processors installed	• 1x Compute System Board, 7XG7A03955 • 2x processor options (match installed) • Memory DIMMs (matching installed is recommended)

Initial configuration	Desired upgraded configuration	Parts to order and install
Configuration 3 (Four-Socket Upgradable) 4 processors installed	**Configuration 5** (Eight-Socket Storage Rich) 8 processors installed	• 1x Upper Compute Tray Kit v2, 4C87A37049* • 1x Compute System Board, 7XG7A03955 • 4x 82xx processor options (match installed)* • Memory DIMMs (matching installed is recommended) • Drive backplanes for upper compute tray • RAID adapter or HBA for upper compute tray • Drives for upper compute tray • Additional/replacement PCIe riser cards
Configuration 4 (Four-Socket Upgradable / Storage Rich) 4 processors installed	**Configuration 5** (Eight-Socket Storage Rich) 8 processors installed	• 2x Compute System Board, 7XG7A03955 • 4x 82xx processor options (match installed)** • Memory DIMMs (matching installed is recommended) • Additional/replacement PCIe riser cards
Configuration 5 (Eight-Socket Storage Rich) 6 processors installed	**Configuration 5** (Eight-Socket Storage Rich) 8 processors installed	• 2x processor option (match installed) • Memory DIMMs (matching installed is recommended)

* The Upper Compute Tray Kit includes 1x Compute System Board
** 8-socket configurations must use Intel Xeon Platinum (82xx) processors

Configuration notes:

- The added processors must match the processors already installed.
- When upgrading to Configuration 5 (8-socket configuration), Platinum-level (82xx) processors must be used, as listed in the Processor options section. Gold processors do not support 8-socket configurations.
- For best performance, each processor added should match the memory configuration of existing processors (number & size of DIMMs)
- The ThinkSystem SR950 4S Performance to 8S Upgrade Kit, 4TA7A10969, contains the mid-chassis interconnects needed for an 8-socket configuration, replacing the existing interconnects. Lenovo installation is highly recommended due to the complexity of this upgrade. Installation cost will vary depending on location and scope of work.

SR950 upgrades from first-generation processors

It is supported to upgrade an SR950 server with first-generation Intel Xeon Scalable processors to second-generation processors.

The process is as follows:

1. Order up to 8 processor options to replace the processors you have installed. If desired, order Intel Optane DC Persistent Memory modules.
2. Before swapping hardware, upgrade all system firmware to the latest levels, 19A or later
3. Replace the processors
4. Install Intel Optane DC Persistent Memory (if ordered)

Note: The ASHRAE support and environmental restrictions as outlined in the SR950 (Xeon SP Gen 1) product guide still apply to an upgraded server. See the following link for details: https://lenovopress.com/lp0647#operating-environment

Standard specifications

The following table lists the standard specifications.

Table 6. Standard specifications

Components	Specification
Machine type	7X11 - 1-year warranty 7X12 - 3-year warranty 7X13 - SAP HANA configurations with 3-year warranty
Form factor	4U rack
Processor	Up to eight second-generation Intel Xeon Platinum Scalable Processors or up to four second-generation Intel Xeon Gold Scalable Processors (formerly codenamed "Cascade Lake"). Supports processors with up to 28 cores, core speeds up to 3.8 GHz, and TDP ratings up to 205W. Processors and memory are located on system boards installed in compute trays: 2 processors per system board, 2 system boards per compute tray, and 2 compute trays in the server.
Chipset	Intel C624 chipset (formerly codenamed "Lewisburg")
Memory	Up to 96 DIMM sockets (12 DIMMs per processor, installed on each system board). Lenovo TruDDR4 RDIMMs, LRDIMMs and 3DS RDIMMs are supported. Each processor has 6 memory channels, with 2 DIMMs per channel. DIMM slots are shared between standard system memory and persistent memory. DIMMs are available in three speeds: 2666 MHz, 2933 MHz and Performance+ 2933 MHz. Performance+ DIMMs support 2933 MHz with two DIMMs installed per channel (2DPC), whereas 2933 MHz DIMMs support 2933 MHz with only 1 DIMM per channel (1DPC).
Persistent memory	Supports up to 48 Intel Optane DC Persistent Memory modules (DCPMMs) installed in the DIMM slots. Persistent memory is installed in combination with system memory DIMMs. Runs at 2666 MHz.

Components	Specification
Memory maximums	• With system memory DIMMs: Up to 24TB with 96x 256GB 3DS RDIMMs and eight processors (3TB per processor) • With Persistent Memory in memory mode: Up to 24TB of Persistent Memory with 48x 512GB Intel Optane DC Persistent Memory modules and eight processors (3TB per processor) • With Persistent Memory in AppDirect mode: Up to 36TB total memory (24TB of Persistent Memory using 48x 512GB DCPMMs + 12TB of system memory using 48x 256GB 3DS RDIMMs and eight processors) (4.5TB per processor) **Note**: Support of more than 1TB per processor (more than 4TB for a 4-processor system or 8TB for an 8-processor system) requires M-suffix or L-suffix processors. M-suffix processors support up to 2TB of memory per processor. L-suffix processors support up to 4.5TB of memory per processor. These calculations include any Persistent Memory installed. See the Processor options section for information.
Memory protection	ECC, SDDC (for x4-based memory DIMMs), ADDDC (for x4-based memory DIMMs), memory mirroring, and memory sparing.
Disk drive bays	Up to 24x 2.5" hot-swap SAS/SATA drive bays. With AnyBay backplanes, 12 bays can be configured to support PCIe NVMe drives.
Maximum internal storage	• 737.28TB using 24x 30.72TB 2.5-inch SAS/SATA SSDs • 96TB using 12x 8TB 2.5-inch NVMe SSDs • 57.6TB using 24x 2.4TB 2.5-inch HDDs

Storage controller	• No embedded RAID
	• 12 Gb SAS/SATA RAID adapters:
	  ◦ RAID 530i (cacheless) supports RAID 0, 1, 10, 5, 50
	  ◦ RAID 730-8i with 1GB cache supports RAID 0, 1, 10, 5, 50
	  ◦ RAID 730-8i with 2GB flash-backed cache supports RAID 0, 1, 10, 5, 50, 6, 60
	  ◦ RAID 930-8i with 2GB flash-backed cache supports RAID 0, 1, 10, 5, 50, 6, 60
	  ◦ RAID 930-16i with 4GB flash-backed cache supports RAID 0, 1, 10, 5, 50, 6, 60
	  ◦ RAID 940-8i with 4GB flash-backed cache supports RAID 0, 1, 10, 5, 50, 6, 60
	  ◦ RAID 940-16i with 4GB or 8GB flash-backed cache supports RAID 0, 1, 10, 5, 50, 6, 60
	• 12 Gb SAS/SATA non-RAID:
	  ◦ 430-8i or 440-8i HBAs
	  ◦ 430-16i or 440-16i HBAs

Optical and tape bays	No internal bays.
Network interfaces	Integrated 10Gb Ethernet controller, based on the Intel Ethernet Connection X722. The server supports 1 of 6 available LOM adapters, providing either 2- or 4-port Gigabit Ethernet, 2- or 4-port 10 GbE with SFP+ connections or 2- or 4-port 10 GbE with RJ45 connections. One port can optionally be shared with the XClarity Controller (XCC) management processor for Wake-on-LAN and NC-SI support. 1 or 2 ML2 adapter slots for additional network adapters.

Components	Specification

PCI Expansion slots	Up to 17 PCIe 3.0 rear-accessible slots:
	• Slots 1-4 on a riser, one of:
	  ◦ Riser with 4x PCIe 3.0 x16 slots, all full-height half-length, all 75W
	  ◦ Riser with 2x PCIe 3.0 x16 slots, all full-height half-length, both 75W
	  ◦ Riser with 4x PCIe 3.0 x8 slots, full-height half-length, all 75W
	• Slot 5: PCIe 3.0 x16, low-profile, 75W
	• Slot 6: PCIe 3.0 x16, low-profile, 75W
	• Slot 7: PCIe 3.0 x8, low-profile, 75W
	• Slot 8: PCIe 3.0 x16 ML2, low-profile (supports NC-SI)
	• Slot 9: PCIe 3.0 x8 LOM adapter slot, low-profile (supports NC-SI)
	• Slots 10-15 on a riser, one of:
	  ◦ Riser 5x16+ML2:
	  ▪ Five PCIe 3.0 x16 slots, all full-height half-length, all 75W
	  ▪ One PCIe 3.0 x16 ML2 slot, full-height half-length, 30W (no NC-SI support)
	  ◦ Riser 2x16: Two PCIe 3.0 x16 slots, all full-height half-length, both 75W
	  ◦ Riser 4x8: Four PCIe 3.0 x8 slots, full-height half-length, all 75W
	• Slot 16-17 on a riser:
	  ◦ PCIe 3.0 x8 low profile, 75W
	  ◦ PCIe 3.0 x8 low profile, 75W
	
	Additional internal PCIe slots:
	• One or two PCIe 3.0 x8 slots for storage adapters
	• M.2 adapter slot

Ports	Front: Two USB 2.0 ports (one also for XCC local management), and one VGA video port. Rear: Two USB 3.0, one VGA video, one DB-9 serial, and one 1 GbE RJ-45 systems management. The serial port can be shared with the XCC for serial redirection functions. Only one VGA port can be used at a time.
Cooling	Up to 12 redundant hot-swap single-rotor fans, 6 in each compute tray. Each tray has N+1 fan redundancy.
Power supply	Up to four redundant hot-swap 1100 W or 1600 W power supplies (80 PLUS Platinum certified), supporting 200-240 V AC input. The 1100 W power supply also supports 100-127V AC input supply with a reduced capacity of 1050 W. No support for 240 V DC.
Hot-swap parts	Drives, power supplies, and fans.
Video	G200 graphics with 16 MB memory with 2D hardware accelerator, integrated into the XClarity Controller. Maximum resolution is 1920x1200 32bpp at 60Hz.
Security features	Power-on password, administrator's password, Trusted Platform Module (TPM), supporting TPM 1.2 or TPM 2.0. In China only, optional Trusted Cryptographic Module (TCM).
Systems management	XClarity Controller embedded management, XClarity Administrator centralized infrastructure delivery, XClarity Integrator plugins, and XClarity Energy Manager centralized server power management. XClarity Controller Enterprise functionality standard with the SR950. Light path diagnostics for local failure detection and reporting, with LCD diagnostic pull-out panel.
Operating systems	Microsoft Windows Server, Red Hat Enterprise Linux, SUSE Linux Enterprise Server, VMware ESXi. See the Operating systems section for specifics.
Limited warranty	One year or three-year (model dependent) customer-replaceable unit (CRU) and onsite limited warranty with 9x5 next business day (NBD).
Service and support	Optional service upgrades are available through Lenovo Services: 4-hour or 2-hour response time, 6-hour fix time, 1-year or 2-year warranty extension, software support for Lenovo hardware and some third-party applications.

Components	Specification
Dimensions	Width: 447 mm (17.6 in.), height: 176 mm (6.9 in.), depth: 851 mm (33.5 in.). See Physical and electrical specifications for details.
Weight	Minimum configuration: 32.6 kg (71.9 lb.), Maximum configuration: 58.7 kg (129.4 lb.)

The server is shipped with the following items:

- Rail kit
- Documentation flyer
- Power cords (model and region dependent)

Models

ThinkSystem SR950 models can be configured by using the Lenovo Data Center Solution Configurator (DCSC).

Configure-to-order (CTO) models are used to create models with factory-integrated server customizations. For CTO models, two base CTO models are available for the SR950 as listed in the following table, CTO1WW and CTOLWW:

- The CTO1WW base CTO model is for general business and is selectable by choosing **General Purpose** mode in DCSC.
- The CTOLWW base model is intended for High Performance Computing (HPC) and Artificial Intelligence (AI) configurations and solutions, including configurations for Lenovo Scalable Infrastructure (LeSI), and is enabled using either the **HPC & AI LeSI Solutions** mode or **HPC & AI Hardware** mode in DCSC. CTOLWW configurations can also be built using System x and Cluster Solutions Configurator (x-config).

Preconfigured server models may also be available for the SR950, however these are region-specific; that is, each region may define their own server models, and not all server models are available in every region.

The following table lists the base CTO models of the ThinkSystem SR950 server.

Table 7. Base CTO models

Machine Type/Model General purpose	Machine Type/Model for HPC and AI	Description
7X12CTO1WW	7X12CTOLWW	ThinkSystem SR950 – 3-year Warranty
7X11CTO1WW	7X11CTOLWW	ThinkSystem SR950 – 1-year Warranty
7X13CTO1WW	None	ThinkSystem SR950 – SAP HANA configurations with 3-year warranty

The following tables list the available models, grouped by region.

- Models for Australia and New Zealand
- Models for South East Asian regions (ASEAN)
- Models for EMEA regions
- Models for India
- Models for Japan
- Models for USA and Canada

Refer to the Specifications section for information about standard features of the server.

Common to all models:

- All models include a rail kit.

Models for Australia and New Zealand

Table 8. Models for Australia and New Zealand

Model	Intel Xeon processors†	Comp. trays	Memory	RAID	Drive bays	Drives	LOM	Slots*	Power supplies	Power cords
7X12 A02UAU	4x Gold 5220 18C 125W 2.2GHz	1	4x 32GB 2933MHz	1x RAID 930-8i	8x 2.5" (4x AnyBay)	Open	Open	11 (2,0,0,1)	2x 1600W HS	2.8m C13-C14 10A
7X12 A02WAU	2x Gold 6230 20C 125W 2.1GHz	1	2x 16GB 2Rx8 2933MHz	1x RAID 930-16i	8x 2.5" (4x AnyBay)	Open	Open	5 (0,0,0,0)	2x 1600W HS	None
7X12 A02NAU	2x Gold 6230 20C 125W 2.1GHz	1	2x 32GB 2933MHz	1x RAID 930-8i	8x 2.5" (2x AnyBay)	Open	Open	5 (0,0,0,0)	2x 1100W HS	2.8m C13-C20
7X12 A02GAU	2x Gold 6240 18C 150W 2.6GHz	1	2x 16GB 2Rx8 2933MHz	1x RAID 930-16i	8x 2.5" (4x AnyBay)	Open	Open	5 (0,0,0,0)	2x 1600W HS	None
7X12 A02JAU	2x Gold 6242 16C 150W 2.8GHz	1	2x 16GB 2Rx8 2933MHz	1x RAID 930-16i	8x 2.5" (4x AnyBay)	Open	Open	5 (0,0,0,0)	2x 1600W HS	None
7X12 A02VAU	2x Gold 6242 16C 150W 2.8GHz	1	4x 32GB 2933MHz	1x RAID 930-16i	12x 2.5"	Open	Open	5 (0,0,0,0)	2x 1600W HS	2.8m C13-C14 10A
7X12 A02LAU	2x Gold 6244 8C 150W 3.6GHz	1	2x 16GB 2Rx8 2933MHz	1x RAID 930-16i	8x 2.5" (4x AnyBay)	Open	Open	5 (0,0,0,0)	2x 1600W HS	None
7X12 A031AU	2x Gold 6248 20C 150W 2.5GHz	1	2x 16GB 2Rx8 2933MHz	1x RAID 930-16i	8x 2.5" (4x AnyBay)	Open	Open	5 (0,0,0,0)	2x 1600W HS	None
7X12 A02ZAU	2x Gold 6252 24C 150W 2.1GHz	1	2x 16GB 2Rx8 2933MHz	1x RAID 930-16i	8x 2.5" (4x AnyBay)	Open	Open	5 (0,0,0,0)	2x 1600W HS	None
7X12 A029AU	2x Gold 6254 18C 200W 3.1GHz	1	2x 16GB 2Rx8 2933MHz	1x RAID 930-16i	8x 2.5" (4x AnyBay)	Open	Open	5 (0,0,0,0)	2x 1600W HS	None
7X12 A02RAU	4x Platinum 8253 16C 125W 2.2GHz	1	4x 32GB 2933MHz	1x RAID 930-8i	8x 2.5" (4x AnyBay)	Open	Open	11 (2,0,0,1)	2x 1600W HS	2.8m C13-C14 10A
7X12 A02BAU	2x Platinum 8260 24C 165W 2.4GHz	1	2x 16GB 2Rx8 2933MHz	1x RAID 930-16i	8x 2.5" (4x AnyBay)	Open	Open	5 (0,0,0,0)	2x 1600W HS	None
7X12 A02XAU	8x Platinum 8260 24C 165W 2.4GHz	2	8x 32GB 2933MHz	2x RAID 930-16i	24x 2.5" (12x AnyBay)	Open	Open	17 (0,0,2,1)	4x 1600W HS	2.8m C13-C14 10A
7X12 A02FAU	2x Platinum 8270 26C 205W 2.7GHz	1	2x 16GB 2Rx8 2933MHz	1x RAID 930-16i	8x 2.5" (4x AnyBay)	Open	Open	5 (0,0,0,0)	2x 1600W HS	None
7X12 A02SAU	2x Platinum 8280 28C 205W 2.7GHz	1	2x 16GB 2Rx8 2933MHz	1x RAID 930-16i	8x 2.5" (4x AnyBay)	Open	Open	5 (0,0,0,0)	2x 1600W HS	None

† Processor detail: Quantity, model, core count, TDP, core frequency
* Values in brackets are numbers of riser cards: (A,B,C,D) where A=2x16 Riser, B=4x8 Riser, C=5x16+ML2 Riser, D=2x8 Riser

Models for South East Asian regions (ASEAN)

Table 9. Models for South East Asian regions (ASEAN)

Model	Intel Xeon processors†	Comp. trays	Memory	RAID	Drive bays	Drives	LOM	Slots*	Power supplies	Power cords
7X12 A02WSG	2x Gold 6230 20C 125W 2.1GHz	1	2x 16GB 2Rx8 2933MHz	1x RAID 930-16i	8x 2.5" (4x AnyBay)	Open	Open	5 (0,0,0,0)	2x 1600W HS	None
7X12 A02GSG	2x Gold 6240 18C 150W 2.6GHz	1	2x 16GB 2Rx8 2933MHz	1x RAID 930-16i	8x 2.5" (4x AnyBay)	Open	Open	5 (0,0,0,0)	2x 1600W HS	None
7X12 A02JSG	2x Gold 6242 16C 150W 2.8GHz	1	2x 16GB 2Rx8 2933MHz	1x RAID 930-16i	8x 2.5" (4x AnyBay)	Open	Open	5 (0,0,0,0)	2x 1600W HS	None
7X12 A02LSG	2x Gold 6244 8C 150W 3.6GHz	1	2x 16GB 2Rx8 2933MHz	1x RAID 930-16i	8x 2.5" (4x AnyBay)	Open	Open	5 (0,0,0,0)	2x 1600W HS	None
7X12 A031SG	2x Gold 6248 20C 150W 2.5GHz	1	2x 16GB 2Rx8 2933MHz	1x RAID 930-16i	8x 2.5" (4x AnyBay)	Open	Open	5 (0,0,0,0)	2x 1600W HS	None
7X12 A02ZSG	2x Gold 6252 24C 150W 2.1GHz	1	2x 16GB 2Rx8 2933MHz	1x RAID 930-16i	8x 2.5" (4x AnyBay)	Open	Open	5 (0,0,0,0)	2x 1600W HS	None
7X12 A029SG	2x Gold 6254 18C 200W 3.1GHz	1	2x 16GB 2Rx8 2933MHz	1x RAID 930-16i	8x 2.5" (4x AnyBay)	Open	Open	5 (0,0,0,0)	2x 1600W HS	None
7X12 A02BSG	2x Platinum 8260 24C 165W 2.4GHz	1	2x 16GB 2Rx8 2933MHz	1x RAID 930-16i	8x 2.5" (4x AnyBay)	Open	Open	5 (0,0,0,0)	2x 1600W HS	None
7X12 A02FSG	2x Platinum 8270 26C 205W 2.7GHz	1	2x 16GB 2Rx8 2933MHz	1x RAID 930-16i	8x 2.5" (4x AnyBay)	Open	Open	5 (0,0,0,0)	2x 1600W HS	None
7X12 A02SSG	2x Platinum 8280 28C 205W 2.7GHz	1	2x 16GB 2Rx8 2933MHz	1x RAID 930-16i	8x 2.5" (4x AnyBay)	Open	Open	5 (0,0,0,0)	2x 1600W HS	None

† Processor detail: Quantity, model, core count, TDP, core frequency
* Values in brackets are numbers of riser cards: (A,B,C,D) where A=2x16 Riser, B=4x8 Riser, C=5x16+ML2 Riser, D=2x8 Riser

Models for EMEA regions

Table 10. Models for EMEA regions

Model	Intel Xeon processors†	Comp. trays	Memory	RAID	Drive bays	Drives	LOM	Slots*	Power supplies	Power cords
7X12 A02VEA	2x Gold 6242 16C 150W 2.8GHz	1	4x 32GB 2933MHz	1x RAID 930-16i	12x 2.5"	Open	Open	5 (0,0,0,0)	2x 1600W HS	2.8m C13-C14 10A

† Processor detail: Quantity, model, core count, TDP, core frequency
* Values in brackets are numbers of riser cards: (A,B,C,D) where A=2x16 Riser, B=4x8 Riser, C=5x16+ML2 Riser, D=2x8 Riser

Models for India

Table 11. Models for India

Model	Intel Xeon processors†	Comp. trays	Memory	RAID	Drive bays	Drives	LOM	Slots*	Power supplies	Power cords
7X12 A02QSG	2x Gold 6230 20C 125W 2.1GHz	1	2x 16GB 2Rx8 2933MHz	1x RAID 930-16i	8x 2.5" (4x AnyBay)	Open	Open	5 (0,0,0,0)	2x 1600W HS	2.8m C13-C14 13A
7X12 A02HSG	2x Gold 6240 18C 150W 2.6GHz	1	2x 16GB 2Rx8 2933MHz	1x RAID 930-16i	8x 2.5" (4x AnyBay)	Open	Open	5 (0,0,0,0)	2x 1600W HS	2.8m C13-C14 13A
7X12 A02DSG	2x Gold 6242 16C 150W 2.8GHz	1	2x 16GB 2Rx8 2933MHz	1x RAID 930-16i	8x 2.5" (4x AnyBay)	Open	Open	5 (0,0,0,0)	2x 1600W HS	2.8m C13-C14 13A
7X12 A02YSG	2x Gold 6244 8C 150W 3.6GHz	1	2x 16GB 2Rx8 2933MHz	1x RAID 930-16i	8x 2.5" (4x AnyBay)	Open	Open	5 (0,0,0,0)	2x 1600W HS	2.8m C13-C14 13A
7X12 A02PSG	2x Gold 6248 20C 150W 2.5GHz	1	2x 16GB 2Rx8 2933MHz	1x RAID 930-16i	8x 2.5" (4x AnyBay)	Open	Open	5 (0,0,0,0)	2x 1600W HS	2.8m C13-C14 13A
7X12 A02TSG	2x Gold 6252 24C 150W 2.1GHz	1	2x 16GB 2Rx8 2933MHz	1x RAID 930-16i	8x 2.5" (4x AnyBay)	Open	Open	5 (0,0,0,0)	2x 1600W HS	2.8m C13-C14 13A
7X12 A028SG	2x Gold 6254 18C 200W 3.1GHz	1	2x 16GB 2Rx8 2933MHz	1x RAID 930-16i	8x 2.5" (4x AnyBay)	Open	Open	5 (0,0,0,0)	2x 1600W HS	2.8m C13-C14 13A
7X12 A030SG	2x Platinum 8260 24C 165W 2.4GHz	1	2x 16GB 2Rx8 2933MHz	1x RAID 930-16i	8x 2.5" (4x AnyBay)	Open	Open	5 (0,0,0,0)	2x 1600W HS	2.8m C13-C14 13A
7X12 A02KSG	2x Platinum 8270 26C 205W 2.7GHz	1	2x 16GB 2Rx8 2933MHz	1x RAID 930-16i	8x 2.5" (4x AnyBay)	Open	Open	5 (0,0,0,0)	2x 1600W HS	2.8m C13-C14 13A
7X12 A02ESG	2x Platinum 8280 28C 205W 2.7GHz	1	2x 16GB 2Rx8 2933MHz	1x RAID 930-16i	8x 2.5" (4x AnyBay)	Open	Open	5 (0,0,0,0)	2x 1600W HS	2.8m C13-C14 13A

† Processor detail: Quantity, model, core count, TDP, core frequency
* Values in brackets are numbers of riser cards: (A,B,C,D) where A=2x16 Riser, B=4x8 Riser, C=5x16+ML2 Riser, D=2x8 Riser

Models for Japan

Table 12. Models for Japan

Model	Intel Xeon processors†	Comp. trays	Memory	RAID	Drive bays	Drives	LOM	Slots*	Power supplies	Power cords
7X12 A02MJP	2x Gold 6230 20C 125W 2.1GHz	1	2x 16GB 2Rx8 2933MHz	1x RAID 930-16i	8x 2.5" (4x AnyBay)	Open	4x10Gb RJ45	7 (0,0,0,1)	2x 1100W HS	None
7X12 A02AJP	2x Gold 6254 18C 200W 3.1GHz	1	2x 16GB 2Rx8 2933MHz	1x RAID 930-16i	8x 2.5" (4x AnyBay)	Open	4x10Gb RJ45	7 (0,0,0,1)	2x 1600W HS	None
7X12 A02CJP	4x Platinum 8280 28C 205W 2.7GHz	2	4x 16GB 2Rx8 2933MHz	1x RAID 930-16i	8x 2.5" (4x AnyBay)	Open	4x10Gb RJ45	5 (0,0,0,0)	2x 2000W HS	None

† Processor detail: Quantity, model, core count, TDP, core frequency
* Values in brackets are numbers of riser cards: (A,B,C,D) where A=2x16 Riser, B=4x8 Riser, C=5x16+ML2 Riser, D=2x8 Riser

Models for USA and Canada

Table 13. Models for USA and Canada

Model	Intel Xeon processors†	Comp. trays	Memory	RAID	Drive bays	Drives	LOM	Slots*	Power supplies	Power cords
7X12A02UNA	4x Gold 5220 18C 125W 2.2GHz	1	4x 32GB 2933	1x 930-8i	8x 2.5" (4x AnyBay)	Open	Open	11 (2,0,0,1)	2x 1600W HS	2.8m C13-C14 10A
7X12A02NNA	2x Gold 6230 20C 125W 2.1GHz	1	2x 32GB 2933	1x 930-8i	8x 2.5" (2x AnyBay)	Open	Open	5 (0,0,0,0)	2x 1100W HS	2.8m C13-C20
7X12A02RNA	4x Platinum 8253 16C 125W 2.2GHz	1	4x 32GB 2933	1x 930-8i	8x 2.5" (4x AnyBay)	Open	Open	11 (2,0,0,1)	2x 1600W HS	2.8m C13-C14 10A
7X12A02XNA	8x Platinum 8260 24C 165W 2.4GHz	2	8x 32GB 2933	2x 930-16i	24x 2.5" (12x AnyBay)	Open	Open	17 (0,0,2,1)	4x 1600W HS	2.8m C13-C14 10A

† Processor detail: Quantity, model, core count, TDP, core frequency
* Values in brackets are numbers of riser cards: (A,B,C,D) where A=2x16 Riser, B=4x8 Riser, C=5x16+ML2 Riser, D=2x8 Riser

Processors

The SR950 supports second-generation Intel Xeon Scalable processors in the Gold and Platinum levels.

Topics in this section:

- Continued support for 1st Gen Intel Xeon Scalable processors
- Memory capacity of processors
- Processor features
- Adding additional processors
- UEFI operating modes

The server supports up to four or eight processors, depending on the configuration selected, however processors are all installed within the 4U rack enclosure:

- The use of more than 4 processors requires a Platinum-level processor.
- For configurations that support up to eight processors, the server supports 2, 4, 6 or 8 processors.

- For configurations of up to four processors (lower cost configuration, no upgrade path to eight processors), the server supports 2, 3 or 4 processors.

As described in the Components and connectors section, processors and memory are located on compute system boards - one or two processors per board. Two system boards are installed in a compute tray, and there are two compute trays in the server.

The table below lists the supported second-generation Intel processors.

First generation processors: The SR950 also supports first-generation Xeon Scalable processors. For details, see https://lenovopress.com/lp0647.

All processors listed have the following characteristics:

- Second-generation Intel Xeon Scalable processors (formerly codenamed "Cascade Lake")
- 14 nm process technology
- Six DDR4 memory channels
- 48 PCIe 3.0 I/O lanes
- 1 MB L2 cache
- 1.375 MB or more L3 cache per core
- Intel Hyper-Threading Technology
- Intel Turbo Boost Technology 2.0
- Intel Advanced Vector Extensions 512 (AVX-512)
- Two or three Intel Ultra Path Interconnect (UPI) links at up to 10.4 GT/s

Some processors include a suffix letter in the processor model number:

- L: Large memory tier (supports total memory up to 4.5TB per processor)
- M: Medium memory tier (supports total memory up to 2TB per processor)
- N: NFV optimized
- S: Search optimized
- T: High Tcase
- U: Single socket
- V: VM Density optimized
- Y: Speed Select

Processors without a suffix, or those with a suffix other than M or L, support up to 1TB per processor.

B suffix: B is not an official suffix, but instead used by Intel to distinguish between the Xeon Gold 5218 and the Xeon Gold 5218B processors. These two processor models have the same core counts, frequencies, and features, however they are based on different die configurations. You should not install 5218 and 5218B processors in the same server.

Table 14. Supported second-generation Intel Xeon Scalable processors

Part number	Feature code	Description
4XG7A14952	B4HN	Intel Xeon Gold 5215 10C 85W 2.5GHz Processor
4XG7A14966	B4P9	Intel Xeon Gold 5215L 10C 85W 2.5GHz Processor
4XG7A14951	B4HM	Intel Xeon Gold 5217 8C 115W 3.0GHz Processor
4XG7A14950	B4HL	Intel Xeon Gold 5218 16C 125W 2.3GHz Processor
4XG7A37048	B6BS	Intel Xeon Gold 5218B 16C 125W 2.3GHz Processor
4XG7A14961	B4P3	Intel Xeon Gold 5218T 16C 105W 2.1GHz Processor
4XG7A14949	B4HK	Intel Xeon Gold 5220 18C 125W 2.2GHz Processor
4XG7A16677	B6CW	Intel Xeon Gold 5220S 18C 125W 2.7GHz Processor
4XG7A16671	B6CQ	Intel Xeon Gold 5220T 18C 105W 1.9GHz Processor

Part number	Feature code	Description
4XG7A16662	B5S1	Intel Xeon Gold 5222 4C 105W 3.8GHz Processor
4XG7A16676	B6CV	Intel Xeon Gold 6222V 20C 115W 1.8GHz Processor
4XG7A16667	B6CL	Intel Xeon Gold 6226 12C 125W 2.8GHz Processor
4XG7A14948	B4HJ	Intel Xeon Gold 6230 20C 125W 2.1GHz Processor
4XG7A16663	B5RY	Intel Xeon Gold 6230N 20C 125W 2.3GHz Processor
4XG7A16670	B6CP	Intel Xeon Gold 6230T 20C 125W 2.1GHz Processor
4XG7A16666	B6CK	Intel Xeon Gold 6234 8C 130W 3.3GHz Processor
4XG7A16665	B6CJ	Intel Xeon Gold 6238 22C 140W 2.1GHz Processor
4XG7A16672	B6CR	Intel Xeon Gold 6238L 22C 140W 2.1GHz Processor
4XG7A14960	B4P2	Intel Xeon Gold 6238T 22C 125W 1.9GHz Processor
4XG7A14947	B4HH	Intel Xeon Gold 6240 18C 150W 2.6GHz Processor
4XG7A16673	B6CS	Intel Xeon Gold 6240L 18C 150W 2.6GHz Processor
4XG7A14954	B4NV	Intel Xeon Gold 6240Y 18/14/8C 150W 2.6GHz Processor
4XG7A14946	B4HG	Intel Xeon Gold 6242 16C 150W 2.8GHz Processor
4XG7A14945	B4HF	Intel Xeon Gold 6244 8C 150W 3.6GHz Processor
4XG7A37361	B6PD	Intel Xeon Gold 6246 12C 165W 3.3GHz Processor
4XG7A14944	B4HE	Intel Xeon Gold 6248 20C 150W 2.5GHz Processor
4XG7A14942	B4HC	Intel Xeon Gold 6252 24C 150W 2.1GHz Processor
4XG7A16674	B6CT	Intel Xeon Gold 6252N 24C 150W 2.3GHz Processor
4XG7A14943	B4HD	Intel Xeon Gold 6254 18C 200W 3.1GHz Processor
4XG7A16675	B6CU	Intel Xeon Gold 6262V 24C 135W 1.9GHz Processor
4XG7A16661	B5RZ	Intel Xeon Platinum 8253 16C 125W 2.2GHz Processor
4XG7A16660	B5S2	Intel Xeon Platinum 8256 4C 105W 3.8GHz Processor
4XG7A14941	B4HB	Intel Xeon Platinum 8260 24C 165W 2.4GHz Processor
4XG7A14964	B4P7	Intel Xeon Platinum 8260L 24C 165W 2.4GHz Processor
4XG7A14953	B4NU	Intel Xeon Platinum 8260Y 24/20/16C 165W 2.4GHz Processor
4XG7A14940	B4HA	Intel Xeon Platinum 8268 24C 205W 2.9GHz Processor
4XG7A14939	B4H9	Intel Xeon Platinum 8270 26C 205W 2.7GHz Processor
4XG7A14938	B4H8	Intel Xeon Platinum 8276 28C 165W 2.2GHz Processor
4XG7A14963	B4P6	Intel Xeon Platinum 8276L 28C 165W 2.2GHz Processor
4XG7A14937	B4H7	Intel Xeon Platinum 8280 28C 205W 2.7GHz Processor
4XG7A14962	B4P5	Intel Xeon Platinum 8280L 28C 205W 2.7GHz Processor

Continued support for 1st Gen Intel Xeon Scalable processors

The SR950 also continues to support the 1st Gen Intel Xeon Scalable processors (formerly codenamed "Skylake") listed in the following table.

Table 15. Long-life 1st Gen Intel Xeon Scalable processors

Part number	Feature code	Description
4XG7A08857	No CTO*	ThinkSystem SR950 Intel Xeon Gold 5115 10C 85W 2.4GHz Processor Option Kit
4XG7A08845	AX7D	ThinkSystem SR950 Intel Xeon Gold 5118 12C 105W 2.3GHz Processor Option Kit

Part number	Feature code	Description
4XG7A08864	AX7F	ThinkSystem SR950 Intel Xeon Gold 5119T 14C 85W 1.8GHz Processor Option Kit
4XG7A08831	AX7E	ThinkSystem SR950 Intel Xeon Gold 5120T 14C 105W 2.2GHz Processor Option Kit
4XG7A08835	AWEX	ThinkSystem SR950 Intel Xeon Gold 6126 12C 125W 2.6GHz Processor Option Kit
4XG7A08853	AX73	ThinkSystem SR950 Intel Xeon Gold 6126T 12C 125W 2.6GHz Processor Option Kit
4XG7A08833	AX6D	ThinkSystem SR950 Intel Xeon Gold 6130 16C 125W 2.1GHz Processor Option Kit
4XG7A08851	AX72	ThinkSystem SR950 Intel Xeon Gold 6130T 16C 125W 2.1GHz Processor Option Kit
4XG7A08847	No CTO*	ThinkSystem SR950 Intel Xeon Gold 6134 8C 130W 3.2GHz Processor Option Kit
4XG7A08834	AX6Q	ThinkSystem SR950 Intel Xeon Gold 6138 20C 125W 2.0GHz Processor Option Kit
4XG7A08854	No CTO*	ThinkSystem SR950 Intel Xeon Platinum 8153 16C 125W 2.0GHz Processor Option Kit
4XG7A08855	No CTO*	ThinkSystem SR950 Intel Xeon Platinum 8158 12C 150W 3.0GHz Processor Option Kit
7XG7A03960	No CTO*	ThinkSystem SR950 Intel Xeon Platinum 8180M 28C 205W 2.5GHz Processor Option Kit

* Only available as a field upgrade for existing customers. Not available in CTO (configure to order) configurations.

For specifications of these processors, see the Intel Xeon Scalable Processor Reference for Lenovo ThinkSystem Servers:
https://lenovopress.com/lp1262-intel-xeon-sp-processor-reference#term=SKL

Memory capacity of processors

Second-generation Xeon Scalable processors are limited to the amount of memory they can address, as follows:

- Processors with an L suffix (eg 8280L): Up to 4.5 TB per processor
- Processors with an M suffix (eg 8280M): Up to 2 TB per processor (now withdrawn)
- All other processors: Up to 1 TB per processor

The calculation of the total memory per processor includes both the system memory DIMMs and the Persistent Memory DCPMMs installed in the server.

For example:

- A configuration using 12x 64GB DIMMs per processor is a total of 768 GB, which means that neither an M nor L processor is required
- A configuration using 12x 256GB DIMMs per processor is a total of 3 TB, which means that an L processor is required
- A configuration using 6x 32GB DIMMs + 6x 256GB DCPMMs is a total of 1.69 TB which means an M processor is required (an L processor may also be used)
- A configuration using 6x 64GB DIMMs + 6x 512GB DCPMMs is a total of 3.375 TB which means an L processor is required
- A configuration using 6x 256GB DIMMs + 6x 512GB DCPMMs is a total of 4.5 TB which means an L processor is required

Processor features

The following table compares the features of the supported second-generation Intel Xeon processors. The table lists the number of Intel Ultra Path Interconnect (UPI) ports each processor has. UPI ports are used to connect processors together for high-speed communications.

- When a processor has 3 UPI ports, it can be used in a 4-socket mesh configuration where all processors are directly connected to every other processor. 5200 Series processors do not support mesh topology, since they only have 2 UPI ports.
- When a processor has only 2 UPI ports, it can only be used in a 4-socket ring configuration where all processors are connected to the 2 adjacent processors and the fourth processor is only connected indirectly via another processor.

The mesh and ring topologies are shown in the following figure.

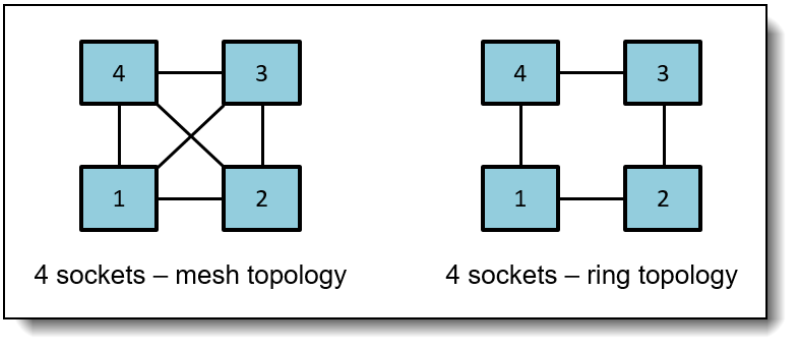

Figure 14. Mesh and ring processor topologies

Abbreviations used in the table:

- UPI: Ultra Path Interconnect
- TDP: Thermal Design Power
- FMA: Number of Intel AVX-512 Fused-Multiply Add (FMA) units
- HT: Hyper-Threading
- TB: Turbo Boost 2.0
- VT: Virtualization Technology (includes VT-x and VT-d)
- SST-PP: Speed Select Technology - Performance Profile
- DCPMM: DC Persistent Memory Module support
- RAS: Reliability, Availability, and Serviceability: Std = Standard, Adv = Advanced

The processors that support SST-PP offer three distinct operating points that are defined by a core count with a base speed associated with that core count. The operating point is selected during the boot process and cannot be changed at runtime.

Table 16. Processor specifications

CPU model	Cores / threads	Core speed (Base / TB max)	L3 cache*	Max memory speed	Max memory per CPU	UPI links & speed	FMA units	TDP	HT	TB	VT	SST-PP	DCPMM	RAS
Intel Xeon 5200 (Gold) processors														
5215	10 / 20	2.5 / 3.4 GHz	13.75 MB	2666 MHz	1 TB	2, 10.4 GT/s	1	85 W	Y	Y	Y	N	Y	Adv
5215L	10 / 20	2.5 / 3.4 GHz	13.75 MB	2666 MHz	4.5 TB	2, 10.4 GT/s	1	85 W	Y	Y	Y	N	Y	Adv
5217	8 / 16	3.0 / 3.7 GHz	11 MB	2666 MHz	1 TB	2, 10.4 GT/s	1	115 W	Y	Y	Y	N	Y	Adv
5218**	16 / 32	2.3 / 3.9 GHz	22 MB	2666 MHz	1 TB	2, 10.4 GT/s	1	125 W	Y	Y	Y	N	Y	Adv
5218B**	16 / 32	2.3 / 3.9 GHz	22 MB	2666 MHz	1 TB	2, 10.4 GT/s	1	125 W	Y	Y	Y	N	Y	Adv
5218T	16 / 32	2.1 / 3.9 GHz	22 MB	2666 MHz	1 TB	2, 10.4 GT/s	1	105 W	Y	Y	Y	N	Y	Adv

CPU model	Cores / threads	Core speed (Base / TB max)	L3 cache*	Max memory speed	Max memory per CPU	UPI links & speed	FMA units	TDP	HT	TB	VT	SST-PP	DCPMM	RAS
5220	18 / 36	2.2 / 3.9 GHz	24.75 MB	2666 MHz	1 TB	2, 10.4 GT/s	1	125 W	Y	Y	Y	N	Y	Adv
5220S	18 / 36	2.7 / 3.9 GHz	24.75 MB	2666 MHz	1 TB	2, 10.4 GT/s	1	125 W	Y	Y	Y	N	Y	Adv
5220T	18 / 36	1.9 / 3.9 GHz	24.75 MB	2666 MHz	1 TB	2, 10.4 GT/s	1	105 W	Y	Y	Y	N	Y	Adv
5222	4 / 8	3.8 / 3.9 GHz	16.5 MB*	2933 MHz	1 TB	2, 10.4 GT/s	2	105 W	Y	Y	Y	N	Y	Adv
Intel Xeon 6200 (Gold) processors														
6222V	20 / 40	1.8 / 3.6 GHz	27.5 MB	2400 MHz	1 TB	3, 10.4 GT/s	2	115 W	Y	Y	Y	N	Y	Adv
6226	12 / 24	2.7 / 3.7 GHz	19.25 MB*	2933 MHz	1 TB	3, 10.4 GT/s	2	125 W	Y	Y	Y	N	Y	Adv
6230	20 / 40	2.1 / 3.9 GHz	27.5 MB	2933 MHz	1 TB	3, 10.4 GT/s	2	125 W	Y	Y	Y	N	Y	Adv
6230N	20 / 40	2.3 / 3.9 GHz	27.5 MB	2933 MHz	1 TB	3, 10.4 GT/s	2	125 W	Y	Y	Y	N	Y	Adv
6230T	20 / 40	2.1 / 3.9 GHz	27.5 MB	2933 MHz	1 TB	3, 10.4 GT/s	2	125 W	Y	Y	Y	N	Y	Adv
6234	8 / 16	3.3 / 4.0 GHz	24.75 MB	2933 MHz	1 TB	3, 10.4 GT/s	2	130 W	Y	Y	Y	N	Y	Adv
6238	22 / 44	2.1 / 3.7 GHz	30.25 MB	2933 MHz	1 TB	3, 10.4 GT/s	2	140 W	Y	Y	Y	N	Y	Adv
6238L	22 / 44	2.1 / 3.7 GHz	30.25 MB	2933 MHz	4.5 TB	3, 10.4 GT/s	2	140 W	Y	Y	Y	N	Y	Adv
6238T	22 / 44	1.9 / 3.7 GHz	30.25 MB	2933 MHz	1 TB	3, 10.4 GT/s	2	125 W	Y	Y	Y	N	Y	Adv
6240	18 / 36	2.6 / 3.9 GHz	24.75 MB	2933 MHz	1 TB	3, 10.4 GT/s	2	150 W	Y	Y	Y	N	Y	Adv
6240L	18 / 36	2.6 / 3.9 GHz	24.75 MB	2933 MHz	4.5 TB	3, 10.4 GT/s	2	150 W	Y	Y	Y	N	Y	Adv
6240Y	18 / 36	2.6 / 3.9 GHz	24.75 MB	2933 MHz	1 TB	3, 10.4 GT/s	2	150 W	Y	Y	Y	Y	Y	Adv
	14 / 28	2.8 / 3.9 GHz												
	8 / 16	3.1 / 3.9 GHz												
6242	16 / 32	2.8 / 3.9 GHz	22 MB	2933 MHz	1 TB	3, 10.4 GT/s	2	150 W	Y	Y	Y	N	Y	Adv
6244	8 / 16	3.6 / 4.4 GHz	24.75 MB*	2933 MHz	1 TB	3, 10.4 GT/s	2	150 W	Y	Y	Y	N	Y	Adv
6246	12 / 24	3.3 / 3.9 GHz	24.75 MB*	2933 MHz	1 TB	3, 10.4 GT/s	2	165 W	Y	Y	Y	N	Y	Adv
6248	20 / 40	2.5 / 3.9 GHz	27.5 MB	2933 MHz	1 TB	3, 10.4 GT/s	2	150 W	Y	Y	Y	N	Y	Adv
6252	24 / 48	2.1 / 3.7 GHz	35.75 MB*	2933 MHz	1 TB	3, 10.4 GT/s	2	150 W	Y	Y	Y	N	Y	Adv
6252N	24 / 48	2.3 / 3.6 GHz	35.75 MB*	2933 MHz	1 TB	3, 10.4 GT/s	2	150 W	Y	Y	Y	N	Y	Adv
6254	18 / 36	3.1 / 4.0 GHz	24.75 MB	2933 MHz	1 TB	3, 10.4 GT/s	2	200 W	Y	Y	Y	N	Y	Adv
6262V	24 / 48	1.9 / 3.6 GHz	33 MB	2400 MHz	1 TB	3, 10.4 GT/s	2	135 W	Y	Y	Y	N	Y	Adv
Intel Xeon 8200 (Platinum) processors														
8253	16 / 32	2.2 / 3.0 GHz	22 MB	2933 MHz	1 TB	3, 10.4 GT/s	2	125 W	Y	Y	Y	N	Y	Adv
8256	4 / 8	3.8 / 3.9 GHz	16.5 MB*	2933 MHz	1 TB	3, 10.4 GT/s	2	105 W	Y	Y	Y	N	Y	Adv
8260	24 / 48	2.4 / 3.9 GHz	35.75 MB*	2933 MHz	1 TB	3, 10.4 GT/s	2	165 W	Y	Y	Y	N	Y	Adv
8260L	24 / 48	2.4 / 3.9 GHz	35.75 MB*	2933 MHz	4.5 TB	3, 10.4 GT/s	2	165 W	Y	Y	Y	N	Y	Adv
8260Y	24 / 48	2.4 / 3.9 GHz	35.75 MB*	2933 MHz	1 TB	3, 10.4 GT/s	2	165 W	Y	Y	Y	Y	Y	Adv
	20 / 40	2.5 / 3.9 GHz												
	16 / 32	2.7 / 3.9 GHz												
8268	24 / 48	2.9 / 3.9 GHz	35.75 MB*	2933 MHz	1 TB	3, 10.4 GT/s	2	205 W	Y	Y	Y	N	Y	Adv
8270	26 / 52	2.7 / 4.0 GHz	35.75 MB	2933 MHz	1 TB	3, 10.4 GT/s	2	205 W	Y	Y	Y	N	Y	Adv
8276	28 / 56	2.2 / 4.0 GHz	38.5 MB	2933 MHz	1 TB	3, 10.4 GT/s	2	165 W	Y	Y	Y	N	Y	Adv
8276L	28 / 56	2.2 / 4.0 GHz	38.5 MB	2933 MHz	4.5 TB	3, 10.4 GT/s	2	165 W	Y	Y	Y	N	Y	Adv
8280	28 / 56	2.7 / 4.0 GHz	38.5 MB	2933 MHz	1 TB	3, 10.4 GT/s	2	205 W	Y	Y	Y	N	Y	Adv
8280L	28 / 56	2.7 / 4.0 GHz	38.5 MB	2933 MHz	4.5 TB	3, 10.4 GT/s	2	205 W	Y	Y	Y	N	Y	Adv

* L3 cache is 1.375 MB per core or larger. Processors with a larger L3 cache per core are marked with an *
** The Intel Xeon Gold 5218 and 5218B processors have similar specifications; however, they use different silicon designs and cannot be mixed in the same system.

Adding additional processors

For configurations with only one compute tray, you can upgrade to add a second compute tray. You can also add additional system boards as needed. The ordering information for these upgrades is listed in the following table.

Table 17. Compute tray and system board upgrades

Part number	Feature code	Description
7XG7A03955	B4Y1	ThinkSystem SR950 2-CPU, 24 DIMM Compute System Board v2
4C87A37049	B6E5	ThinkSystem SR950 Upper Compute Tray Kit with 19k fans, 6-8S Upgrade v2

The Compute System Board option, 7XG7A03955, includes the following components:

- One compute system board, without processors or memory

Tip: The only difference between Compute System Board v2, and the original Compute System Board is that the v2 compute board provides sufficient power to support the new 19K RPM high-speed fans.

The Upper Compute Tray Kit, 4C87A37049, includes the following components:

- 1x compute tray with 12 drive bays and 1 slot for storage adapter
- 6x 19K RPM system fans
- 1x Compute System Board v2
- 3x 4-bay drive bay fillers

Note: The Upper Compute Tray Kit does not include drive backplanes

UEFI operating modes

The SR950 offers preset operating modes that affect energy consumption and performance. These modes are a collection of predefined low-level UEFI settings that simplify the task of tuning the server to suit your business and workload requirements.

The following table lists the feature codes that allow you to specify the mode you wish to preset in the factory for CTO orders.

Table 18. UEFI operating mode presets in DCSC

Feature code	Description
BFYB	Operating mode selection for: "Maximum Performance Mode"
BFYC	Operating mode selection for: "Minimal Power Mode"
BFYD	Operating mode selection for: "Efficiency Favoring Power Savings Mode"
BFYE	Operating mode selection for: "Efficiency - Favoring Performance Mode"

The preset modes for the SR950 are as follows:

- **Maximum Performance Mode** (feature BFYB): Achieves maximum performance but with higher power consumption and lower energy efficiency.
- **Minimal Power Mode** (feature BFYC): Minimize the absolute power consumption of the system.
- **Efficiency Favoring Power Savings Mode** (feature BFYD): Maximize the performance/watt efficiency with a bias towards power savings. This is the favored mode for SPECpower benchmark testing, for example.
- **Efficiency Favoring Performance Mode** (feature BFYE): Maximize the performance/watt efficiency

with a bias towards performance. This is the favored mode for Energy Star certification, for example.

For details about these preset modes, and all other performance and power efficiency UEFI settings offered in the SR950, see the paper "Tuning UEFI Settings for Performance and Energy Efficiency on Intel Xeon Scalable Processor-Based ThinkSystem Servers", available from https://lenovopress.lenovo.com/lp1477.

Memory options

The SR950 with second-generation Intel Xeon Scalable processors uses Lenovo TruDDR4 memory operating at up to 2933 MHz. The server supports 12 DIMMs per processor, which corresponds to 48 DIMMs with four processors installed and 96 DIMMs when eight processors are installed. Each processor has six memory channels with two DIMMs per channel.

With 256 GB 3DS RDIMMs installed, an 8-socket server supports a total of 24 TB of system memory.

The SR950 with second-generation Intel Xeon Scalable processors also supports Intel Optane DC Persistent Memory, as described in the Persistent Memory section.

As described in the Components and connectors section, the memory is installed on compute system boards and there are two system boards per compute tray and one or two compute trays per server, depending on the configuration.

The SR950 with second-generation processors supports these memory DIMMs:

- 2666 MHz DIMMs, that operate at 2666 MHz both at 1 DIMM per channel and 2 DIMMs per channel
- 2933 MHz DIMMs, that operate at 2933 MHz at 1 DIMM per channel, and at 2666 MHz at 2 DIMMs per channel
- 2933 MHz Performance+ DIMMs, that operate at 2933 MHz both at 1 DIMM per channel and 2 DIMMs per channel

Note that if the processor selected has a memory bus speed of 2666 MHz, then all DIMMs will operate at 2666 MHz, even if the DIMMs are rated for 2933 MHz.

The following three tables lists the memory options that are available for SR950.

Lenovo TruDDR4 memory uses the highest quality components that are sourced from Tier 1 DRAM suppliers and only memory that meets the strict requirements of Lenovo is selected. It is compatibility tested and tuned to maximize performance and reliability. From a service and support standpoint, Lenovo TruDDR4 memory automatically assumes the system warranty, and Lenovo provides service and support worldwide.

Table 19. 2666 MHz memory options

Part number	Feature code	Description	Maximum supported
RDIMMs			
7X77A01303	AUNC	ThinkSystem 16GB TruDDR4 2666 MHz (2Rx8 1.2V) RDIMM	96 (12 per processor)
7X77A01304	AUND	ThinkSystem 32GB TruDDR4 2666 MHz (2Rx4 1.2V) RDIMM	96 (12 per processor)

Table 20. 2933 MHz memory options

Part number	Feature code	Description	Maximum supported
2933 MHz RDIMMs			
4ZC7A08707	B4LY	ThinkSystem 16GB TruDDR4 2933 MHz (1Rx4 1.2V) RDIMM	96 (12 per processor)
4ZC7A08708	B4H2	ThinkSystem 16GB TruDDR4 2933MHz (2Rx8 1.2V) RDIMM	96 (12 per processor)
4ZC7A08709	B4H3	ThinkSystem 32GB TruDDR4 2933MHz (2Rx4 1.2V) RDIMM	96 (12 per processor)
4ZC7A08710	B4H4	ThinkSystem 64GB TruDDR4 2933MHz (2Rx4 1.2V) RDIMM	96 (12 per processor)
2933 MHz 3DS RDIMMs			
4ZC7A15113	B587	ThinkSystem 128GB TruDDR4 2933MHz (4Rx4 1.2V) 3DS RDIMM	96 (12 per processor)
4ZC7A08727	B4Y3	ThinkSystem 256GB TruDDR4 2933MHz (8Rx4 1.2V) 3DS RDIMM	96 (12 per processor)

Table 21. 2933 MHz Performance+ memory options

Part number	Feature code	Description	Maximum supported
2933 MHz Performance+ RDIMMs			
4X77A12184	B5N6	ThinkSystem 16GB TruDDR4 Performance+ 2933MHz (2Rx8 1.2V) RDIMM	96 (12 per processor)
4X77A12185	B5N7	ThinkSystem 32GB TruDDR4 Performance+ 2933MHz (2Rx4 1.2V) RDIMM	96 (12 per processor)
4X77A12186	B5N8	ThinkSystem 64GB TruDDR4 Performance+ 2933MHz (2Rx4 1.2V) RDIMM	96 (12 per processor)
2933 MHz Performance+ 3DS RDIMMs			
4X77A12187	B5N9	ThinkSystem 128GB TruDDR4 Performance+ 2933MHz (4Rx4 1.2V) 3DS RDIMM	96 (12 per processor)
4X77A64957	B5NA	ThinkSystem 256GB TruDDR4 Performance+ 2933MHz (8Rx4 1.2V) 3DS RDIMM	96 (12 per processor)

The following rules apply when selecting the memory configuration:

- The server supports RDIMMs, LRDIMMs and 3DS RDIMMs. UDIMMs are not supported.
- Mixing RDIMMs, LRDIMMs or 3DS RDIMMs is not supported.
- Mixing x4 and x8 DIMMs is supported.
- Mixing of 2933 MHz Performance+ DIMMs with other DIMMs or Persistent Memory is not supported
- Mixing of 2666 MHz and 2933 MHz and is supported, however, all installed memory will operate at the lowest speed.

For best performance, consider the following:

- Ensure the memory installed is at least the same speed as the memory bus of the selected processor.
- Populate memory DIMMs in quantities of 6 or 12 per processor, so that all memory channels are used.
- When mixing 16 GB and 32 GB DIMMs in the same configuration, use 16GB 2Rx8 DIMMs instead of 16 GB 1Rx4 DIMMs for better performance.

- Populate memory channels so they all have the same total memory capacity.
- Ensure all memory controllers on a processor socket have the same DIMM configuration.
- All processor sockets on the same physical server should have the same DIMM configuration.

The following memory protection technologies are supported:

- ECC
- SDDC (for x4-based memory DIMMs; look for "x4" in the DIMM description)
- ADDDC (for x4-based memory DIMMs)
- Memory mirroring
- Memory rank sparing

If memory channel mirroring is used, then DIMMs must be installed in pairs or sets of three (minimum of one pair or set of three per processor), and all DIMMs in the pair or set of three must be identical in type and size. 50% of the installed capacity is available to the operating system.

If memory rank sparing is used, then a minimum of two single-rank or dual-rank DIMMs must be installed per populated channel (the DIMMs do not need to be identical). In rank sparing mode, one rank of a DIMM in each populated channel is reserved as spare memory. The largest rank in the channel will be automatically selected as the spare rank. The amount of memory available to the operating system depends on the number, capacity and rank counts of the DIMMs installed.

Persistent Memory

The SR950 server supports Intel Optane DC Persistent Memory, a new class of memory and storage technology explicitly architected for data center usage. Persistent Memory offers significantly lower latency than fetching data from SSDs, even NVMe SSDs, and offers higher capacities than system memory.

Using Lenovo ThinkSystem servers running applications that are tuned for Intel Optane DC Persistent Memory will result in lower data latency compared to solid-state drive technology. When data is stored closer to the processor on nonvolatile media, applications can see significant overall improvement in performance.

The following table lists the ordering information for the DC Persistent Memory modules (DCPMMs).

Table 22. DCPMM part numbers

Part number	Feature code	Description	Maximum supported
4ZC7A15110	B4LV	ThinkSystem 128GB TruDDR4 2666MHz (1.2V) Intel Optane DC Persistent Memory	48 (6 per processor)
4ZC7A15111	B4LW	ThinkSystem 256GB TruDDR4 2666MHz (1.2V) Intel Optane DC Persistent Memory	48 (6 per processor)
4ZC7A15112	B4LX	ThinkSystem 512GB TruDDR4 2666MHz (1.2V) Intel Optane DC Persistent Memory	48 (6 per processor)

The following are the requirements when installing DCPMMs:

- All second generation Intel Xeon Scalable Family processors that the SR950 supports also support DCPMMs. First generation Xeon Scalable processors are not supported.
- All installed DCPMMs must be the same size. Mixing DCPMMs of different capacities is not supported
- Maximum 6 DCPMMs per processor (install 1 in each memory channel)
- Minimum 2 TruDDR4 DIMMs per processor (1 per memory controller)
- For Memory Mode, minimum 2 DCPMMs per processor (install 1 per memory controller)
- For App Direct Mode, minimum 1 DCPMM installed in the server (any processor)

- When either Memory Mode or Mixed Mode is used, the ratio of memory to DCPMMs must be between 1:16 and 1:4, but the recommended ratio is 1:4 for the best performance. For example, 6x 16GB DIMMs + 2x 256GB DCPMMs is a ratio of 1:5.33. This ratio requirement does not apply to App Direct mode.
- For each memory channel with both a DCPMM and a TruDDR4 DIMM installed, the DCPMM is installed in channel slot 1 (closest) and the DIMM is installed in channel slot 0
- To maximize performance, balance all memory channels
- In configurations with DCPMMs installed, memory mirroring is supported, with two restrictions:
    - Mirroring is only enabled on the DRAM DIMMs installed in the server; The DCPMMs themselves do not support mirroring.
    - Only App Direct mode is supported. Memory mirroring cannot be enabled when DCPMMs are in Memory Mode or Mixed Mode.
- Memory sparing is not supported with DCPMMs installed

DCPMMs offer the following memory protection technologies:

- ECC
- SDDC
- DDDC
- Patrol scrubbing
- Demand scrubbing

In the App Direct mode, the DCPMMs also support memory mirroring that is performed by the processor's integrated memory controllers. Memory mirroring is not supported in Memory Mode or Mixed Mode. Memory rank sparing is not supported by DCPMMs in any mode.

For more information, see the Intel Optane DC Persistent Memory (DCPMM) product guide, https://lenovopress.com/LP1066

Internal storage

The SR950 offers up to 24x 2.5-inch drive bays, depending on the server configuration selected (as described in Server configurations). The server also supports either one or two M.2 drives, installed in an M.2 adapter.

In this section:

- Backplanes and drive bays
- Adapters and cabling
- M.2 drives
- SED encryption key management with ISKLM

Backplanes and drive bays

Drives are all located at the front of the server, 12 drives at the front of the upper tray and 12 at the front of the lower tray. Drives are connected to 4-drive backplanes in a 2-by-2 configuration, as shown in the following figure. All drive bays are 2.5-inch form factor.

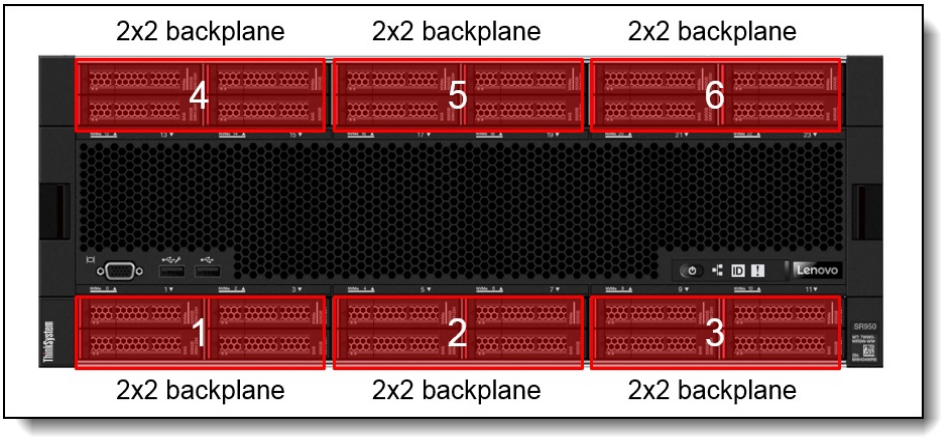

Figure 15. Location of backplanes

There are two different backplanes available for the SR950:

- SAS/SATA backplane: Supports 4 SAS or SATA drives
- AnyBay backplane:
  - Top two drives support SAS, SATA, or NVMe interface drives (Lenovo AnyBay)
  - Bottom two drive bays support SAS or SATA drives only

Regular 2.5-inch SAS/SATA drive bays support only SAS or SATA drives; however, the Lenovo AnyBay drive bay design allows a choice of SATA, SAS, or U.2 (NVMe) PCIe drives. This design enables the flexibility to configure some of the bays with high-performance PCIe SSDs while still using the other bays for high-capacity HDDs, which is an ideal solution for storage-tiering.

The part numbers in the following table include the cables needed for backplane field upgrades.

The backplane kits include the cables needed for 430 HBA and RAID 530/730/930 adapters, however for field upgrades using the RAID 940 adapter or 440 HBA, alternative cables are required and can be ordered using ThinkSystem SR950 X40 RAID Cable Kit, 4X97A80369. In CTO factory orders, the necessary cables will be derived.

Table 23. Drive backplanes and cable kit

Part number	Feature code	Description	Maximum supported
Backplane kits			
4XB7A80584	BMQ5	ThinkSystem SR950 2.5" SAS/SATA 2x2 Bay Backplane Kit v2 (Support for 4 SAS/SATA drives)	6
7XB7A03966	AUN6	ThinkSystem 2.5" SAS/SATA 2x2 Bay Backplane Kit (Support for 4 SAS/SATA drives)	6
4XB7A80583	BMQ4	ThinkSystem SR950 2.5" SAS/SATA/NVMe 2x2 Bay Backplane Kit v2 (Support for 2 AnyBay and 2 SAS/SATA drives)	6
7XB7A03965	AUN5	ThinkSystem 2.5" SAS/SATA/NVMe 2x2 Bay Backplane Kit (Support for 2 AnyBay and 2 SAS/SATA drives)	6
Cable kit			
4X97A80369	BN9H	ThinkSystem SR950 X40 RAID Cable Kit (Cables required for field upgrades to a RAID 940 or 440 HBA)	6

If the server is configured with all AnyBay backplanes, then the server supports up to 12 NVMe drives, depending on the server configuration. The NVMe-capable drive bays are the even-numbered bays as shown in the following figure.

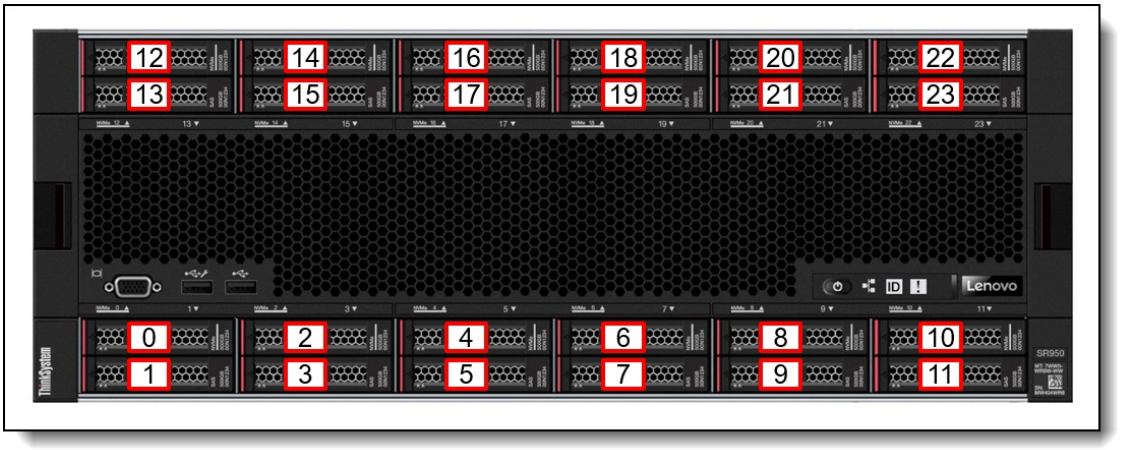

Figure 16. Drive bay numbering

The quantity and location of the AnyBay drive bays depends on the configuration, as listed in the following table.

See the Server configurations section for details about the five server configurations.

Table 24. Drive bays and NVMe support for each SR950 configuration

Configuration	Maximum storage	Location of NVMe drive bays (see previous figure for bay numbering)
Configuration 1. Four-Socket Performance		
2 processors installed	12 drives (2 NVMe)	Bays 8 and 10
3 processors installed	12 drives (4 NVMe)	Bays 4, 6, 8, 10
4 processors installed	12 drives (6 NVMe)	Bays 0, 2, 4, 6, 8, 10
Configuration 2. Four-Socket Performance/ Storage Rich		
2 processors installed	24 drives (4 NVMe)	Bays 8, 10 and 20, 22
3 processors installed	24 drives (8 NVMe)	Bays 4, 6, 8, 10, and 16, 18, 20, 22
4 processors installed	24 drives (12 NVMe)	Bays 0, 2, 4, 6, 8, 10, 12, 14, 16, 18, 20, 22
Configuration 3. Four-Socket Upgradable		
2 processors installed	12 drives (2 NVMe)	Bays 8 and 10
4 processors installed	12 drives (6 NVMe)	Bays 0, 2, 4, 6, 8, 10
Configuration 4. Four-Socket Upgradable / Storage Rich		
4 processors installed	24 drives (4 NVMe)	Bays 8, 10 and 20, 22
Configuration 5. Eight-Socket Storage Rich		
6 processors installed	24 drives (8 NVMe)	Bays 0, 2, 4, 6, 8, 10 and 12, 14
8 processors installed	24 drives (12 NVMe)	Bays 0, 2, 4, 6, 8, 10, 12, 14, 16, 18, 20, 22

Backplane connections are as follows:

- The 4-drive SAS/SATA backplane has one SAS/SATA connector and connects to a supported RAID controller or SAS HBA installed in the dedicated storage adapter slot.
- The 4-drive AnyBay backplane has one SAS/SATA connector and connects to a supported RAID controller or SAS HBA plus one NVMe connector to connect to NVMe ports on one of the system boards in a compute tray or directly on the storage tray.

The SAS/SATA backplane is shown in the following figure.

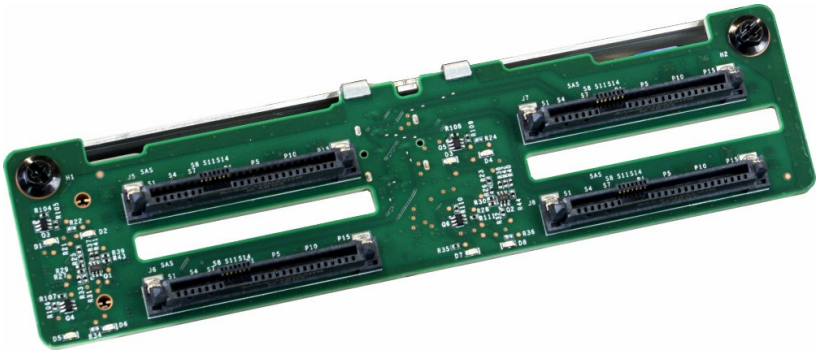

Figure 17. SAS/SATA backplane

Adapters and cabling

Each compute tray or storage tray includes one dedicated PCIe slot for a RAID adapter or SAS HBA.

Tip: The adapters are described in detail in the Controllers for internal storage section.

SAS/SATA backplanes are connected to the RAID adapter or HBA installed in the dedicated slot in that tray. AnyBay backplanes (NVMe support on 2 of the 4 drive bays) are connected to the RAID adapter or HBA or to an NVMe port adjacent to processor on a system board.

The following table lists which processor each SAS/SATA storage adapter and which NVMe port each backplane is connected to. Backplane numbering is shown in Figure 11.

Processor numbering is shown in Figure 7.

Table 25. Processor connectivity for storage adapters and NVMe ports

Configuration	Slot location	4S Performance	4S Performance/ Storage Rich	4S Upgradeable	4S Upgradeable/ Storage Rich	8S Storage Rich
Processors installed		2 (1,2) or 3 (1,2,4) or 4 (1,2,3,4)	2 (1,2) or 3 (1,2,4) or 4 (1,2,3,4)	2 (1,2) or 4 (1,2,3,4)	4 (1,2,5,6)	6 (1,2,3,4,5,7) or 8 (1-8)
Storage adapter slot	Upper tray	NC	1	NC	5	5
Storage adapter slot	Lower tray	1	1	1	1	1
NVMe on backplane 4	Upper tray	NC	3*	NC	NC	7
NVMe on backplane 5		NC	4*	NC	NC	8*
NVMe on backplane 6		NC	2	NC	6	6*
NVMe on backplane 1	Lower tray	3*	3*	3*	NC	3
NVMe on backplane 2		4*	4*	4*	NC	4
NVMe on backplane 3		2	2	2	2	2

* See note below

Note: In 2, 3 and 6 processor configurations, the following backplanes cannot be AnyBay backplanes:

- In 2-processor configurations, processors 3 and 4 are not installed; this means drive backplanes 1 and 2 cannot be AnyBay backplanes.
- In 3-processor configurations, processor 3 is not installed; this means drive backplanes 1 and 4 cannot be AnyBay backplanes
- In 6-processor configurations, processors 6 & 8 are not installed; this means drive backplanes 5 and 6 cannot be AnyBay backplanes

M.2 drives

The server supports one or two M.2 form-factor SATA drives for use as an operating system boot solution. With two M.2 drives configured, the drives are configured by default as a RAID-1 mirrored pair for redundancy.

The M.2 drives install into an M.2 adapter which in turn is installed in a dedicated slot on the system board. See the internal view of the server in the Components and connectors section for the location of the M.2 slot.

There are two M.2 adapters supported, as listed in the following table.

Table 26. M.2 components

Part number	Feature code	Description	Maximum supported
7Y37A01092	AUMU	ThinkSystem M.2 Enablement Kit (contains the Single M.2 Boot Adapter; supports 1 drive)	1
7Y37A01093	AUMV	ThinkSystem M.2 with Mirroring Enablement Kit (contains the Dual M.2 Boot Adapter, supports 1 or 2 drives)	1

Supported drives are listed in the Internal drive options section.

For details about M.2 components, see the *ThinkSystem M.2 Drives and M.2 Adapters* product guide: https://lenovopress.com/lp0769-thinksystem-m2-drives-adapters

SED encryption key management with ISKLM

The server supports self-encrypting drives (SEDs) as listed in the Internal drive options section. To effectively manage a large deployment of these drives in Lenovo servers, IBM Security Key Lifecycle Manager (SKLM) offers a centralized key management solution. A Lenovo Feature on Demand (FoD) upgrade is used to enable this SKLM support in the management processor of the server.

The following table lists the part numbers and feature codes for the upgrades.

Table 27. FoD upgrades for SKLM support

Part number	Feature code	Description
Security Key Lifecycle Manager - FoD (United States, Canada, Asia Pacific, and Japan)		
00D9998	A5U1	SKLM for System x/ThinkSystem w/SEDs - FoD per Install with 1 year S&S
00D9999	AS6C	SKLM for System x/ThinkSystem w/SEDs - FoD per Install with 3 year S&S
Security Key Lifecycle Manager - FoD (Latin America, Europe, Middle East, and Africa)		
00FP648	A5U1	SKLM for System x/ThinkSystem w/SEDs - FoD per Install with 1 year S&S
00FP649	AS6C	SKLM for System x/ThinkSystem w/SEDs - FoD per Install with 3 year S&S

The IBM Security Key Lifecycle Manager software is available from Lenovo using the ordering information listed in the following table.

Table 28. IBM Security Key Lifecycle Manager licenses

Part number	Description
7S0A007FWW	IBM Security Key Lifecycle Manager Basic Edition Install License + SW Subscription & Support 12 Months
7S0A007HWW	IBM Security Key Lifecycle Manager For Raw Decimal Terabyte Storage Resource Value Unit License + SW Subscription & Support 12 Months
7S0A007KWW	IBM Security Key Lifecycle Manager For Raw Decimal Petabyte Storage Resource Value Unit License + SW Subscription & Support 12 Months
7S0A007MWW	IBM Security Key Lifecycle Manager For Usable Decimal Terabyte Storage Resource Value Unit License + SW Subscription & Support 12 Months
7S0A007PWW	IBM Security Key Lifecycle Manager For Usable Decimal Petabyte Storage Resource Value Unit License + SW Subscription & Support 12 Months

Controllers for internal storage

The SR950 supports internal SAS and SATA drives with the addition of a RAID adapter or HBA. The adapter is installed in a dedicated slot in each compute tray. For NVMe support, the server uses NVMe ports that are on the compute system boards or on the storage tray if one is configured.

The following table lists the supported adapters.

No Tri-Mode support: The server does not support RAID adapters with Tri-Mode (supporting SAS, SATA and NVMe drives).

Table 29. Controllers for internal storage

Part number	Feature code	Description	Number of ports	Maximum supported
SAS/SATA HBA				
7Y37A01088	AUNL	ThinkSystem 430-8i SAS/SATA 12Gb HBA	8	2
7Y37A01089	AUNM	ThinkSystem 430-16i SAS/SATA 12Gb HBA	12**	2
4Y37A78601	BM51	ThinkSystem 440-8i SAS/SATA PCIe Gen4 12Gb HBA	8	2
4Y37A78602	BM50	ThinkSystem 440-16i SAS/SATA PCIe Gen4 12Gb HBA	16	2
RAID adapters				
7Y37A01082	AUNG	ThinkSystem RAID 530-8i PCIe 12Gb Adapter	8	2
4Y37A78834	BMFT	ThinkSystem RAID 540-8i PCIe Gen4 12Gb Adapter	8	2
7Y37A01083*	AUNH*	ThinkSystem RAID 730-8i 1GB Cache PCIe 12Gb Adapter	8	2
4Y37A09722	B4RQ	ThinkSystem RAID 730-8i 2GB Flash PCIe 12Gb Adapter	8	2
7Y37A01084	AUNJ	ThinkSystem RAID 930-8i 2GB Flash PCIe 12Gb Adapter	8	2
7Y37A01085	AUNK	ThinkSystem RAID 930-16i 4GB Flash PCIe 12Gb Adapter	12**	2
4Y37A09721	B31E	ThinkSystem RAID 930-16i 8GB Flash PCIe 12Gb Adapter	12**	2
4Y37A09728	B8NY	ThinkSystem RAID 940-8i 4GB Flash PCIe Gen4 12Gb Adapter	8	2
4Y37A78600	BM35	ThinkSystem RAID 940-16i 4GB Flash PCIe Gen4 12Gb Adapter	12**	2
4Y37A09730	B8NZ	ThinkSystem RAID 940-16i 8GB Flash PCIe Gen4 12Gb Adapter	12**	2

* The RAID 730-8i 1GB Cache adapter is not available in USA and Canada.
** The 430-16i HBA and RAID 930-16i adapter support 12 drives when used in the SR950

For a comparison of the functions of the supported storage adapters, see the ThinkSystem RAID Adapter and HBA Reference:
https://lenovopress.com/lp1288-thinksystem-raid-adapter-and-hba-reference#sr950-support=SR950

Internal drive options

The following tables list the drive options for internal storage of the server.

2.5-inch hot-swap drives:

- 2.5-inch hot-swap 12 Gb SAS HDDs
- 2.5-inch hot-swap 6 Gb SATA HDDs
- 2.5-inch hot-swap 24 Gb SAS SSDs
- 2.5-inch hot-swap 12 Gb SAS SSDs
- 2.5-inch hot-swap 6 Gb SATA SSDs
- 2.5-inch hot-swap PCIe 4.0 NVMe SSDs
- 2.5-inch hot-swap PCIe 3.0 NVMe SSDs

M.2 drives:

- M.2 SATA drives

M.2 drive support: The use of M.2 drives requires an additional adapter as described in the M.2 drives subsection.

SED support: The tables include a column to indicate which drives support SED encryption. The encryption functionality can be disabled if needed. Note: Not all SED-enabled drives have "SED" in the description.

PCIe 4.0 NVMe drive support: When installed in this server, PCIe 4.0 NVMe drives will operate at PCIe 3.0 speeds.

Table 30. 2.5-inch hot-swap 12 Gb SAS HDDs

Part number	Feature code	Description	SED support	Max Qty
2.5-inch hot-swap HDDs - 12 Gb SAS 15K				
7XB7A00021	AULV	ThinkSystem 2.5" 300GB 15K SAS 12Gb Hot Swap 512n HDD	No	24
7XB7A00022	AULW	ThinkSystem 2.5" 600GB 15K SAS 12Gb Hot Swap 512n HDD	No	24
7XB7A00023	AULX	ThinkSystem 2.5" 900GB 15K SAS 12Gb Hot Swap 512e HDD	No	24
2.5-inch hot-swap HDDs - 12 Gb SAS 10K				
7XB7A00024	AULY	ThinkSystem 2.5" 300GB 10K SAS 12Gb Hot Swap 512n HDD	No	24
7XB7A00025	AULZ	ThinkSystem 2.5" 600GB 10K SAS 12Gb Hot Swap 512n HDD	No	24
7XB7A00026	AUM0	ThinkSystem 2.5" 900GB 10K SAS 12Gb Hot Swap 512n HDD	No	24
7XB7A00027	AUM1	ThinkSystem 2.5" 1.2TB 10K SAS 12Gb Hot Swap 512n HDD	No	24
7XB7A00028	AUM2	ThinkSystem 2.5" 1.8TB 10K SAS 12Gb Hot Swap 512e HDD	No	24
7XB7A00069	B0YS	ThinkSystem 2.5" 2.4TB 10K SAS 12Gb Hot Swap 512e HDD	No	24
2.5-inch hot-swap HDDs - 12 Gb NL SAS				
7XB7A00034	AUM6	ThinkSystem 2.5" 1TB 7.2K SAS 12Gb Hot Swap 512n HDD	No	24
7XB7A00035	AUM7	ThinkSystem 2.5" 2TB 7.2K SAS 12Gb Hot Swap 512n HDD	No	24
2.5-inch hot-swap SED HDDs - 12 Gb SAS 10K				
7XB7A00031	AUM5	ThinkSystem 2.5" 600GB 10K SAS 12Gb Hot Swap 512n HDD SED	Support	24
7XB7A00033	B0YX	ThinkSystem 2.5" 1.2TB 10K SAS 12Gb Hot Swap 512n HDD SED	Support	24

Table 31. 2.5-inch hot-swap 6 Gb SATA HDDs

Part number	Feature code	Description	SED support	Max Qty
2.5-inch hot-swap HDDs - 6 Gb NL SATA				
7XB7A00036	AUUE	ThinkSystem 2.5" 1TB 7.2K SATA 6Gb Hot Swap 512n HDD	No	24
7XB7A00037	AUUJ	ThinkSystem 2.5" 2TB 7.2K SATA 6Gb Hot Swap 512e HDD	No	24

Table 32. 2.5-inch hot-swap 24 Gb SAS SSDs

Part number	Feature code	Description	SED support	Max Qty
2.5-inch hot-swap SSDs - 24 Gb SAS - Mixed Use/Mainstream (3-5 DWPD)				
4XB7A80340	BNW8	ThinkSystem 2.5" PM1655 800GB Mixed Use SAS 24Gb HS SSD	Support	24
4XB7A80341	BNW9	ThinkSystem 2.5" PM1655 1.6TB Mixed Use SAS 24Gb HS SSD	Support	24
4XB7A80342	BNW6	ThinkSystem 2.5" PM1655 3.2TB Mixed Use SAS 24Gb HS SSD	Support	24
4XB7A80343	BP3K	ThinkSystem 2.5" PM1655 6.4TB Mixed Use SAS 24Gb HS SSD	Support	24
2.5-inch hot-swap SSDs - 24 Gb SAS - Read Intensive/Entry/Capacity (<3 DWPD)				
4XB7A80318	BNWC	ThinkSystem 2.5" PM1653 960GB Read Intensive SAS 24Gb HS SSD	Support	24
4XB7A80319	BNWE	ThinkSystem 2.5" PM1653 1.92TB Read Intensive SAS 24Gb HS SSD	Support	24
4XB7A80320	BNWF	ThinkSystem 2.5" PM1653 3.84TB Read Intensive SAS 24Gb HS SSD	Support	24
4XB7A80321	BP3E	ThinkSystem 2.5" PM1653 7.68TB Read Intensive SAS 24Gb HS SSD	Support	24
4XB7A80322	BP3J	ThinkSystem 2.5" PM1653 15.36TB Read Intensive SAS 24Gb HS SSD	Support	24
4XB7A80323	BP3D	ThinkSystem 2.5" PM1653 30.72TB Read Intensive SAS 24Gb HS SSD	Support	24

Table 33. 2.5-inch hot-swap 12 Gb SAS SSDs

Part number	Feature code	Description	SED support	Max Qty
2.5-inch hot-swap SSDs - 12 Gb SAS - Write Intensive/Performance (10+ DWPD)				
4XB7A83214	BR10	ThinkSystem 2.5" Nytro 3750 400GB Write Intensive SAS 12Gb HS SSD	Support	24
4XB7A83215	BR0Z	ThinkSystem 2.5" Nytro 3750 800GB Write Intensive SAS 12Gb HS SSD	Support	24
4XB7A83216	BR0Y	ThinkSystem 2.5" Nytro 3750 1.6TB Write Intensive SAS 12Gb HS SSD	Support	24
4XB7A83217	BR0X	ThinkSystem 2.5" Nytro 3750 3.2TB Write Intensive SAS 12Gb HS SSD	Support	24
4XB7A70006	BG07	ThinkSystem 2.5" Nytro 3732 400GB Performance SAS 12Gb Hot Swap SSD	No	24
4XB7A70005	BG06	ThinkSystem 2.5" Nytro 3732 800GB Performance SAS 12Gb Hot Swap SSD	No	24
4XB7A70007	BFZZ	ThinkSystem 2.5" Nytro 3732 800GB Performance SAS 12Gb Hot Swap SSD SED	Support	24
4XB7A70004	BG05	ThinkSystem 2.5" Nytro 3732 1.6TB Performance SAS 12Gb Hot Swap SSD	No	24
4XB7A70003	BG04	ThinkSystem 2.5" Nytro 3732 3.2TB Performance SAS 12Gb Hot Swap SSD	No	24
2.5-inch hot-swap SSDs - 12 Gb SAS - Mixed Use/Mainstream (3-5 DWPD)				
4XB7A17062	B8HU	ThinkSystem 2.5" PM1645a 800GB Mainstream SAS 12Gb Hot Swap SSD	No	24
4XB7A17063	B8J4	ThinkSystem 2.5" PM1645a 1.6TB Mainstream SAS 12Gb Hot Swap SSD	No	24
4XB7A17064	B8JD	ThinkSystem 2.5" PM1645a 3.2TB Mainstream SAS 12Gb Hot Swap SSD	No	24
4XB7A17065	B8JA	ThinkSystem 2.5" PM1645a 6.4TB Mainstream SAS 12Gb Hot Swap SSD	No	24
2.5-inch hot-swap SSDs - 12 Gb SAS - Read Intensive/Entry/Capacity (<3 DWPD)				
4XB7A38175	B91A	ThinkSystem 2.5" PM1643a 960GB Entry SAS 12Gb Hot Swap SSD	No	24
4XB7A38176	B91B	ThinkSystem 2.5" PM1643a 1.92TB Entry SAS 12Gb Hot Swap SSD	No	24
4XB7A17054	B91C	ThinkSystem 2.5" PM1643a 3.84TB Entry SAS 12Gb Hot Swap SSD	No	24
4XB7A17055	B91D	ThinkSystem 2.5" PM1643a 7.68TB Entry SAS 12Gb Hot Swap SSD	No	24
4XB7A17056	BC4R	ThinkSystem 2.5" PM1643a 15.36TB Entry SAS 12Gb Hot Swap SSD	No	24

Table 34. 2.5-inch hot-swap 6 Gb SATA SSDs

Part number	Feature code	Description	SED support	Max Qty
2.5-inch hot-swap SSDs - 6 Gb SATA - Mixed Use/Mainstream (3-5 DWPD)				
4XB7A82289	BQ21	ThinkSystem 2.5" 5400 MAX 480GB Mixed Use SATA 6Gb HS SSD	Support	24
4XB7A82290	BQ24	ThinkSystem 2.5" 5400 MAX 960GB Mixed Use SATA 6Gb HS SSD	Support	24
4XB7A82291	BQ22	ThinkSystem 2.5" 5400 MAX 1.92TB Mixed Use SATA 6Gb HS SSD	Support	24
4XB7A82292	BQ23	ThinkSystem 2.5" 5400 MAX 3.84TB Mixed Use SATA 6Gb HS SSD	Support	24
4XB7A17125	BA7Q	ThinkSystem 2.5" S4620 480GB Mixed Use SATA 6Gb HS SSD	No	24

Part number	Feature code	Description	SED support	Max Qty
4XB7A17126	BA4T	ThinkSystem 2.5" S4620 960GB Mixed Use SATA 6Gb HS SSD	No	24
4XB7A17127	BA4U	ThinkSystem 2.5" S4620 1.92TB Mixed Use SATA 6Gb HS SSD	No	24
4XB7A17128	BK7L	ThinkSystem 2.5" S4620 3.84TB Mixed Use SATA 6Gb HS SSD	No	24
4XB7A17087	B8J1	ThinkSystem 2.5" 5300 240GB Mainstream SATA 6Gb Hot Swap SSD	No	24
4XB7A17088	B8HY	ThinkSystem 2.5" 5300 480GB Mainstream SATA 6Gb Hot Swap SSD	No	24
4XB7A17089	B8J6	ThinkSystem 2.5" 5300 960GB Mainstream SATA 6Gb Hot Swap SSD	No	24
4XB7A17090	B8JE	ThinkSystem 2.5" 5300 1.92TB Mainstream SATA 6Gb Hot Swap SSD	No	24
4XB7A17091	B8J7	ThinkSystem 2.5" 5300 3.84TB Mainstream SATA 6Gb Hot Swap SSD	No	24
4XB7A13633	B49L	ThinkSystem 2.5" S4610 240GB Mixed Use SATA 6Gb HS SSD	No	24
4XB7A13637	B49Q	ThinkSystem 2.5" S4610 3.84TB Mixed Use SATA 6Gb HS SSD	No	24
2.5-inch hot-swap SSDs - 6 Gb SATA - Read Intensive/Entry (<3 DWPD)				
4XB7A82258	BQ1Q	ThinkSystem 2.5" 5400 PRO 240GB Read Intensive SATA 6Gb HS SSD	Support	24
4XB7A82259	BQ1P	ThinkSystem 2.5" 5400 PRO 480GB Read Intensive SATA 6Gb HS SSD	Support	24
4XB7A82260	BQ1R	ThinkSystem 2.5" 5400 PRO 960GB Read Intensive SATA 6Gb HS SSD	Support	24
4XB7A82261	BQ1X	ThinkSystem 2.5" 5400 PRO 1.92TB Read Intensive SATA 6Gb HS SSD	Support	24
4XB7A82262	BQ1S	ThinkSystem 2.5" 5400 PRO 3.84TB Read Intensive SATA 6Gb HS SSD	Support	24
4XB7A82263	BQ1T	ThinkSystem 2.5" 5400 PRO 7.68TB Read Intensive SATA 6Gb HS SSD	Support	24
4XB7A72438	BM8B	ThinkSystem 2.5" PM893 480GB Read Intensive SATA 6Gb HS SSD	No	24
4XB7A72439	BM8A	ThinkSystem 2.5" PM893 960GB Read Intensive SATA 6Gb HS SSD	No	24
4XB7A72440	BM89	ThinkSystem 2.5" PM893 1.92TB Read Intensive SATA 6Gb HS SSD	No	24
4XB7A72441	BM88	ThinkSystem 2.5" PM893 3.84TB Read Intensive SATA 6Gb HS SSD	No	24
4XB7A72442	BM87	ThinkSystem 2.5" PM893 7.68TB Read Intensive SATA 6Gb HS SSD	No	24
4XB7A17072	B99D	ThinkSystem 2.5" S4520 240GB Read Intensive SATA 6Gb HS SSD	No	24
4XB7A17101	BA7G	ThinkSystem 2.5" S4520 480GB Read Intensive SATA 6Gb HS SSD	No	24
4XB7A17102	BA7H	ThinkSystem 2.5" S4520 960GB Read Intensive SATA 6Gb HS SSD	No	24
4XB7A17103	BA7J	ThinkSystem 2.5" S4520 1.92TB Read Intensive SATA 6Gb HS SSD	No	24
4XB7A17104	BK77	ThinkSystem 2.5" S4520 3.84TB Read Intensive SATA 6Gb HS SSD	No	24
4XB7A17105	BK78	ThinkSystem 2.5" S4520 7.68TB Read Intensive SATA 6Gb HS SSD	No	24
4XB7A38271	BCTC	ThinkSystem 2.5" Multi Vendor 240GB Entry SATA 6Gb Hot Swap SSD	No	24
4XB7A38272	BCTD	ThinkSystem 2.5" Multi Vendor 480GB Entry SATA 6Gb Hot Swap SSD	No	24
4XB7A38273	BCTE	ThinkSystem 2.5" Multi Vendor 960GB Entry SATA 6Gb Hot Swap SSD	No	24
4XB7A38274	BCTF	ThinkSystem 2.5" Multi Vendor 1.92TB Entry SATA 6Gb Hot Swap SSD	No	24
4XB7A38275	BCTG	ThinkSystem 2.5" Multi Vendor 3.84TB Entry SATA 6Gb Hot Swap SSD	No	24
4XB7A17075	B8HV	ThinkSystem 2.5" 5300 240GB Entry SATA 6Gb Hot Swap SSD	No	24
4XB7A17076	B8JM	ThinkSystem 2.5" 5300 480GB Entry SATA 6Gb Hot Swap SSD	No	24
4XB7A17077	B8HP	ThinkSystem 2.5" 5300 960GB Entry SATA 6Gb Hot Swap SSD	No	24

Part number	Feature code	Description	SED support	Max Qty
4XB7A17078	B8J5	ThinkSystem 2.5" 5300 1.92TB Entry SATA 6Gb Hot Swap SSD	No	24
4XB7A17079	B8JP	ThinkSystem 2.5" 5300 3.84TB Entry SATA 6Gb Hot Swap SSD	No	24
4XB7A17080	B8J2	ThinkSystem 2.5" 5300 7.68TB Entry SATA 6Gb Hot Swap SSD	No	24
4XB7A38185	B9AC	ThinkSystem 2.5" 5210 960GB Entry SATA 6Gb Hot Swap QLC SSD	No	24
4XB7A38144	B7EW	ThinkSystem 2.5" 5210 1.92TB Entry SATA 6Gb Hot Swap QLC SSD	No	24
4XB7A38145	B7EX	ThinkSystem 2.5" 5210 3.84TB Entry SATA 6Gb Hot Swap QLC SSD	No	24
4XB7A38146	B7EY	ThinkSystem 2.5" 5210 7.68TB Entry SATA 6Gb Hot Swap QLC SSD	No	24
4XB7A10197	B34K	ThinkSystem 2.5" PM883 960GB Entry SATA 6Gb Hot Swap SSD	No	24
4XB7A10198	B34L	ThinkSystem 2.5" PM883 1.92TB Entry SATA 6Gb Hot Swap SSD	No	24
4XB7A10200	B4D2	ThinkSystem 2.5" PM883 7.68TB Entry SATA 6Gb Hot Swap SSD	No	24

Table 35. 2.5-inch hot-swap PCIe 4.0 NVMe SSDs

Part number	Feature code	Description	SED support	Max Qty
2.5-inch SSDs - U.2 PCIe 4.0 NVMe - Mixed Use/Mainstream (3-5 DWPD)				
4XB7A17129	BNEG	ThinkSystem 2.5" U.2 P5620 1.6TB Mixed Use NVMe PCIe 4.0 x4 HS SSD	Support	12
4XB7A17130	BNEH	ThinkSystem 2.5" U.2 P5620 3.2TB Mixed Use NVMe PCIe 4.0 x4 HS SSD	Support	12
4XB7A17133	BNEZ	ThinkSystem 2.5" U.2 P5620 6.4TB Mixed Use NVMe PCIe 4.0 x4 HS SSD	Support	12
4XB7A17152	BCFV	ThinkSystem 2.5" U.2 P5600 1.6TB Mixed Use NVMe PCIe 4.0 x4 HS SSD	No	12
2.5-inch SSDs - U.3 PCIe 4.0 NVMe - Mixed Use/Mainstream (3-5 DWPD)				
4XB7A79639	BNF1	ThinkSystem 2.5" U.3 7450 MAX 800GB Mixed Use NVMe PCIe 4.0 x4 HS SSD	Support	12
4XB7A13967	BNEJ	ThinkSystem 2.5" U.3 7450 MAX 1.6TB Mixed Use NVMe PCIe 4.0 x4 HS SSD	Support	12
4XB7A13970	BNEY	ThinkSystem 2.5" U.3 7450 MAX 3.2TB Mixed Use NVMe PCIe 4.0 x4 HS SSD	Support	12
4XB7A13971	BNEL	ThinkSystem 2.5" U.3 7450 MAX 6.4TB Mixed Use NVMe PCIe 4.0 x4 HS SSD	Support	12
4XB7A64175	BE03	ThinkSystem U.3 Kioxia CM6-V 800GB Mainstream NVMe PCIe 4.0 x4 Hot Swap SSD	No	12
4XB7A17112	B96Z	ThinkSystem U.3 Kioxia CM6-V 1.6TB Mainstream NVMe PCIe4.0 x4 Hot Swap SSD	No	12
4XB7A17113	B96T	ThinkSystem U.3 Kioxia CM6-V 3.2TB Mainstream NVMe PCIe4.0 x4 Hot Swap SSD	No	12
4XB7A17114	B96P	ThinkSystem U.3 Kioxia CM6-V 6.4TB Mainstream NVMe PCIe4.0 x4 Hot Swap SSD	No	12
2.5-inch SSDs - U.2 PCIe 4.0 NVMe - Read Intensive/Entry (<3 DWPD)				
4XB7A13941	BMGD	ThinkSystem 2.5" U.2 P5520 1.92TB Read Intensive NVMe PCIe 4.0 x4 HS SSD	Support	12

Part number	Feature code	Description	SED support	Max Qty
4XB7A13942	BMGE	ThinkSystem 2.5" U.2 P5520 3.84TB Read Intensive NVMe PCIe 4.0 x4 HS SSD	Support	12
4XB7A13943	BNEF	ThinkSystem 2.5" U.2 P5520 7.68TB Read Intensive NVMe PCIe 4.0 x4 HS SSD	Support	12
4XB7A13631	BNEQ	ThinkSystem 2.5" U.2 P5520 15.36TB Read Intensive NVMe PCIe 4.0 x4 HS SSD	Support	12
4XB7A17145	BCFT	ThinkSystem 2.5" U.2 P5500 1.92TB Read Intensive NVMe PCIe 4.0 x4 HS SSD	No	12
2.5-inch SSDs - U.3 PCIe 4.0 NVMe - Read Intensive/Entry (<3 DWPD)				
4XB7A79646	BNF3	ThinkSystem 2.5" U.3 7450 PRO 960GB Read Intensive NVMe PCIe 4.0 x4 HS SSD	Support	12
4XB7A79647	BNF2	ThinkSystem 2.5" U.3 7450 PRO 1.92TB Read Intensive NVMe PCIe 4.0 x4 HS SSD	Support	12
4XB7A79648	BNF5	ThinkSystem 2.5" U.3 7450 PRO 3.84TB Read Intensive NVMe PCIe 4.0 x4 HS SSD	Support	12
4XB7A79649	BNF4	ThinkSystem 2.5" U.3 7450 PRO 7.68TB Read Intensive NVMe PCIe 4.0 x4 HS SSD	Support	12
4XB7A83097	BQAV	ThinkSystem 2.5" U.3 7450 PRO 15.36TB Read Intensive NVMe PCIe 4.0 x4 HS SSD	Support	12

Note: NVMe PCIe SSDs support surprise hot removal and hot insertion, provided the operating system supports PCIe SSD hot-swap.

Table 36. 2.5-inch hot-swap PCIe 3.0 NVMe SSDs

Part number	Feature code	Description	SED support	Max Qty
2.5-inch SSDs - U.2 PCIe 3.0 NVMe - Write Intensive/Performance (10+ DWPD)				
7N47A00081	AUMJ	ThinkSystem 2.5" U.2 P4800X 375GB Write Intensive NVMe PCIe 3.0 x4 HS SSD	No	12
2.5-inch SSDs - U.2 PCIe 3.0 NVMe - Mixed Use/Mainstream (3-5 DWPD)				
4XB7A13936	B589	ThinkSystem U.2 Intel P4610 1.6TB Mainstream NVMe PCIe3.0 x4 Hot Swap SSD	No	12
4XB7A13938	B58B	ThinkSystem U.2 Intel P4610 6.4TB Mainstream NVMe PCIe3.0 x4 Hot Swap SSD	No	12
2.5-inch SSDs - U.2 PCIe 3.0 NVMe - Read Intensive/Entry (<3 DWPD)				
4XB7A10202	B58F	ThinkSystem U.2 Intel P4510 1.0TB Entry NVMe PCIe3.0 x4 Hot Swap SSD	No	12
4XB7A10205	B58H	ThinkSystem U.2 Intel P4510 4.0TB Entry NVMe PCIe3.0 x4 Hot Swap SSD	No	12
4XB7A08513	B58J	ThinkSystem U.2 Intel P4510 8.0TB Entry NVMe PCIe3.0 x4 Hot Swap SSD	No	12
4XB7A10175	B34N	ThinkSystem U.2 PM983 1.92TB Entry NVMe PCIe 3.0 x4 Hot Swap SSD	No	12
4XB7A10176	B34P	ThinkSystem U.2 PM983 3.84TB Entry NVMe PCIe 3.0 x4 Hot Swap SSD	No	12
4XB7A10177	B4D3	ThinkSystem U.2 PM983 7.68TB Entry NVMe PCIe3.0 x4 Hot Swap SSD	No	12

Note: NVMe PCIe SSDs support surprise hot removal and hot insertion, provided the operating system supports PCIe SSD hot-swap.

Table 37. M.2 SATA drives

Part number	Feature code	Description	SED support	Max Qty
M.2 SSDs - 6 Gb SATA - Read Intensive/Entry (<3 DWPD)				
4XB7A82286	BQ1Z	ThinkSystem M.2 5400 PRO 240GB Read Intensive SATA 6Gb NHS SSD	Support	2
4XB7A82287	BQ1Y	ThinkSystem M.2 5400 PRO 480GB Read Intensive SATA 6Gb NHS SSD	Support	2
7N47A00129	AUUL	ThinkSystem M.2 32GB SATA 6Gbps Non-Hot Swap SSD	No	2
7N47A00130	AUUV	ThinkSystem M.2 128GB SATA 6Gbps Non-Hot Swap SSD	No	2
4XB7A17071	B8HS	ThinkSystem M.2 5300 240GB SATA 6Gbps Non-Hot Swap SSD	No	2
4XB7A17073	B919	ThinkSystem M.2 5300 480GB SATA 6Gbps Non-Hot Swap SSD	No	2

Internal backup units

The server does not support any internal backup units.

Optical drives

The server supports the external USB optical drive listed in the following table.

Table 38. External optical drive

Part number	Feature code	Description
7XA7A05926	AVV8	ThinkSystem External USB DVD RW Optical Disk Drive

The drive is based on the Lenovo Slim DVD Burner DB65 drive and supports the following formats: DVD-RAM, DVD-RW, DVD+RW, DVD+R, DVD-R, DVD-ROM, DVD-R DL, CD-RW, CD-R, CD-ROM.

I/O expansion options

The server supports the following PCIe slots, depending on the server configuration selected:

- Slots 1-17 are PCIe 3.0 slots accessible from the rear of the server
- One internal dedicated M.2 slot for an M.2 adapter located internally on the I/O tray
- Two internal dedicated PCIe 3.0 x8 slots for storage adapters, located internally in each compute tray or storage tray

The following figure shows the locations of the slots at the rear of the server.

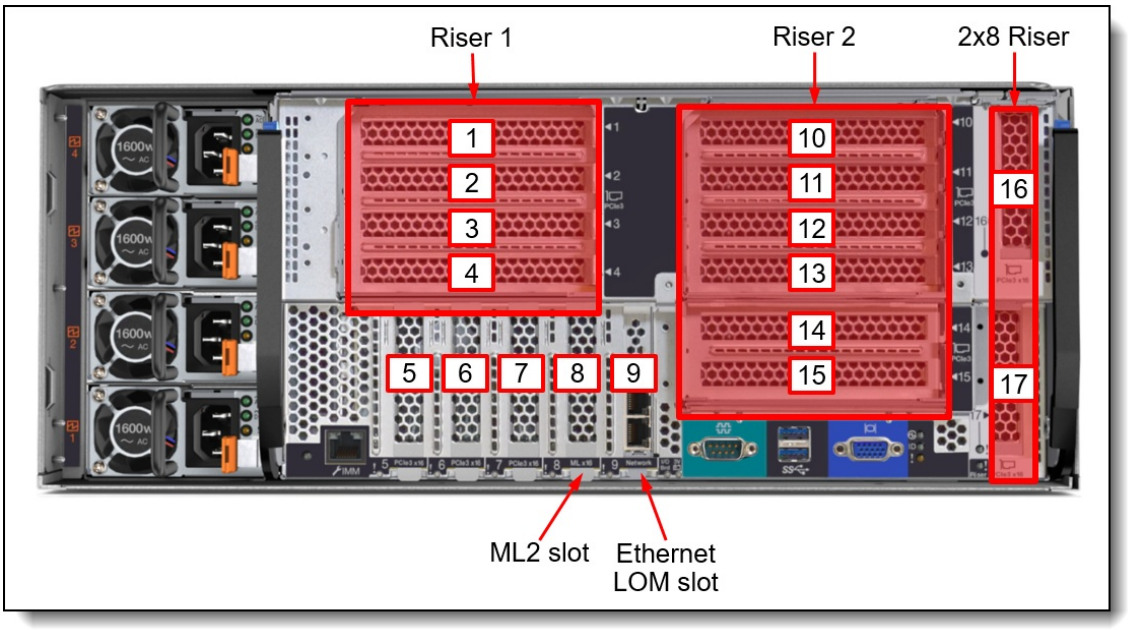

Figure 18. PCIe 3.0 slots at the rear of the server

Processor connectivity: The processor that each slot is connected to depends on the server configuration. See the table in the Slot availability by server configuration section for details.

The 17 PCIe 3.0 rear-accessible slots are as follows:

- Slots 1-4 are via Riser Slot 1, one riser card of:
  - Riser with 4x PCIe 3.0 x16 slots, all full-height half-length, all 75W
  - Riser with 2x PCIe 3.0 x16 slots, all full-height half-length, both 75W
  - Riser with 4x PCIe 3.0 x8 slots, full-height half-length, all 75W
- Slot 5: PCIe 3.0 x16, low profile, 75W

- Slot 6: PCIe 3.0 x16, low profile, 75W
- Slot 7: PCIe 3.0 x8, low profile, 75W
- Slot 8: PCIe 3.0 x16 ML2, low profile (supports NC-SI)
- Slot 9: PCIe 3.0 x8 LOM adapter slot, low profile (supports NC-SI)
- Slots 10-15 are via Riser Slot 2, one riser card of:
    - Riser 5x16+ML2
        - Five PCIe 3.0 x16 slots, all full-height half-length, all 75W
        - One PCIe 3.0 x16 ML2 slot, full-height half-length, 30W (no NC-SI support)
    - Riser 2x16: Two PCIe 3.0 x16 slots, all full-height half-length, both 75W
    - Riser 4x8: Four PCIe 3.0 x8 slots, full-height half-length, all 75W
- Slot 16-17 on a riser:
    - PCIe 3.0 x8 low profile, 75W
    - PCIe 3.0 x8 low profile, 75W

Additional internal PCIe slots:

- One or two PCIe 3.0 x8 slots for storage adapters, one in each compute tray
- M.2 adapter slot

NC-SI (Network Controller Sideband Interface or NCSI) support means the primary port on the adapter installed in that slot can be configured as shared between XCC out-of-band management traffic and production Ethernet traffic.

For riser slots 1 and 2, the server supports the following three riser cards. These are shown in the figure below.

- Riser 5x16+ML2:
    - Five PCIe 3.0 x16 slots, all full-height half-length, all 75W
    - One PCIe 3.0 x16 ML2 slot, full-height half-length, 30W (no NC-SI support)

  Note: When the 5x16+ML2 riser is installed in riser slot 1, the bottom two slots (including the ML2) are not accessible and cannot be used.
- Riser 2x16: Two PCIe 3.0 x16 slots, all full-height half-length, both 75W
- Riser 4x8: Four PCIe 3.0 x8 slots, full-height half-length, all 75W

Note: The ML2 slot on the riser card does not support NC-SI.

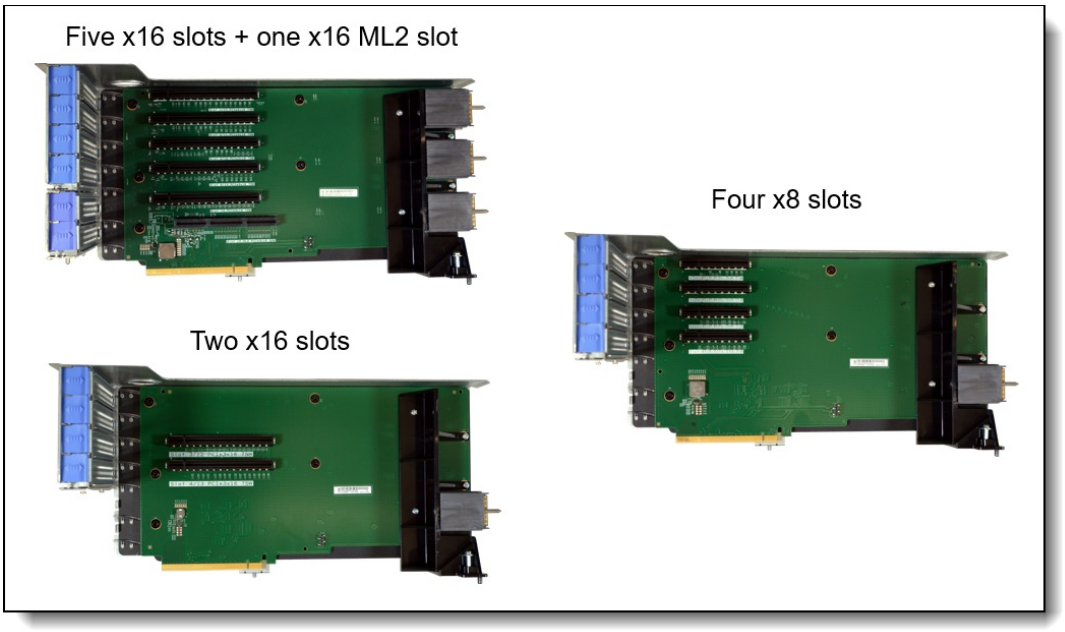

Figure 19. Riser cards for riser slots 1 and 2

Slot numbering is as follows:

- When installed in riser slot 1:
  - Riser 5x16+ML2 becomes slots 1-4 (bottom two slots inaccessible)
  - Riser 2x16 becomes slots 3-4
  - Riser 4x8 becomes slots 1-4
- When installed in riser slot 2:
  - Riser 5x16+ML2 becomes slots 10-15
  - Riser 2x16 becomes slots 12-13
  - Riser 4x8 becomes slots 10-13

Note: When the 5x16+ML2 riser card is used in Riser slot 1, only the top 4 slots (all x16) are accessible. The lower x16 and x16 ML2 slots cannot physically be accessed or used.

Slots 16 and 17 are mounted on a single 2x8 riser card and are as follows:

- Slot 16: PCIe 3.0 x8, full-height half-length, 75W
- Slot 17: PCIe 3.0 x8, full-height half-length, 75W

The 2x8 riser card is shown below.

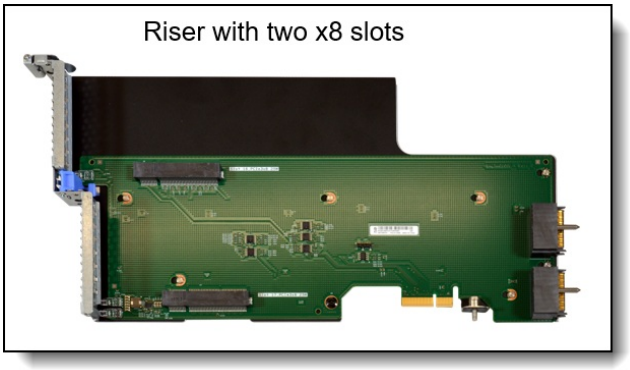

Figure 20. 2x8 riser card

Ordering information for the riser cards is listed in the following table.

Table 39. Riser card ordering information

Part number	Feature code	Description
Riser cards for riser slots 1 and 2		
7XC7A03963	AUN3	ThinkSystem SR950 up to (5) x16 + x16 ML2 PCIe Riser
7XC7A03961	AUN1	ThinkSystem SR950 (2) x16 PCIe Riser
7XC7A03962	AUN2	ThinkSystem SR950 (4) x8 PCIe Riser
Riser card for 2x8 riser slot		
7XC7A03964	AUN4	ThinkSystem SR950 (2) x8 PCIe Riser

Slot availability by server configuration

The riser cards required for each server configuration are listed in the following table. See the Server configurations section for details.

Table 40. Riser card requirements

Riser	4S Performance	4S Performance/ Storage Rich	4S Upgradeable	4S Upgradeable/ Storage Rich	8S Storage Rich
Riser 1	4x8 or 2x16	4x8 or 2x16	4x8 or 2x16	5x16+ML2*	5x16+ML2*
Riser 2	4x8 or 2x16	4x8 or 2x16	4x8 or 2x16	5x16+ML2*	5x16+ML2*
2x8 Riser	2x8	None	2x8	2x8	2x8

* If desired, the 4x8 or 2x16 riser cards can be used instead of the 5x16+ML2 riser, with reduced slot availability

Based on these riser card requirements, the available slots for each server configuration are highlighted with a grey background in the following table. The table also lists the processor that each PCIe slot is connected to, based on the server configuration selected. In the table, NC means not connected.

Processor numbering is shown in Figure 7.

Table 41. Processor connectivity for PCIe slots (NC = not connected)

Configuration	Slot location	4S Performance	4S Performance/ Storage Rich	4S Upgradable	4S Upgradable/ Storage Rich	8S Storage Rich
Processors installed		2 (1,2) or 3 (1,2,4) or 4 (1,2,3,4)	2 (1,2) or 3 (1,2,4) or 4 (1,2,3,4)	2 (1,2) or 4 (1,2,3,4)	4 (1,2,5,6)	6 (1,2,3,4,5,7) or 8 (1-8)
Slot 1	Riser 1	4** (NC for 2x16)*	4** (NC for 2x16)*	4** (NC for 2x16)*	NC	8**
Slot 2		4** (NC for 2x16)*	4** (NC for 2x16)*	4** (NC for 2x16)*	NC	8**
Slot 3		4**	4**	4**	6	6**
Slot 4		4**	4**	4**	6	6**
Slot 5	I/O Tray	2	2	2	2	2
Slot 6	I/O Tray	2	2	2	2	2
Slot 7	I/O Tray	1	1	1	1	1
Slot 8 (ML2)	I/O Tray	1	1	1	1	1
Slot 9 (LOM)	I/O Tray	1 (PCH)	1 (PCH)	1 (PCH)	1 (PCH)	1 (PCH)
Slot 10	Riser 2	3**	3**	3**	NC	7
Slot 11		3**	3**	3**	NC	7
Slot 12		3**	3**	3**	5	5
Slot 13		3**	3**	3**	5	5
Slot 14		NC	NC	NC	NC	3
Slot 15 (ML2)		NC	NC	NC	NC	3
Slot 16	2x8 Riser	3**	NC	3**	NC	3
Slot 17		1	NC	1	1	1
M.2 slot	I/O Tray	1 (PCH)	1 (PCH)	1 (PCH)	1 (PCH)	1 (PCH)
Storage adapter slot	Upper tray	NC	1	NC	5	5
Storage adapter slot	Lower tray	1	1	1	1	1

* Slots 1 and 2 are not connected if the 2x16 riser card is used in riser slot 1
** In 2, 3 and 6 processor configurations, the following slots are not available:

- In 2-processor configurations, processors 3 and 4 are not installed; this means slots 1-4, slots 10-13, and slot 16 are not connected
- In 3-processor configurations, processor 3 is not installed; this means slots 10-13, and slot 16 are not connected
- In 6-processor configurations, processors 6 & 8 are not installed; this means slots 1-4 are not connected

Network adapters

The SR950 has an integrated 10Gb Ethernet controller, based on the Intel Ethernet Connection X722. The X722 has the following features:

- Integrated into the Intel PCH chipset
- Supports 1GbE or 10GbE connections, depending on the selected LOM Phy adapter
- Offers VXLAN/NVGRE hardware offloads
- Supports VMDq and SR-IOV for advanced virtualization
- Supports iWarp RDMA

To provide connectivity to the X722, the SR950 supports six different LOM (LAN on Motherboard) cards which provide the Ethernet PHY function. Only 1 LOM card can be installed. See Figure 3 for the location of the LOM slot.

The LOM card supports NC-SI to allow the network connection to be shared between the operating system and the XClarity Controller (XCC) management module. The LOM also supports Wake-on-LAN (WOL).

For more information about the X722 controller, see the Lenovo Press product guide:
http://lenovopress.com/lp0654-intel-x722-integrated-controller

The following table lists the supported LOM cards.

Note: None of the LOM cards listed in the table support speeds lower than 1 Gbps.

Table 42. Supported LOM adapters

Part number	Feature code	Description	Ports	Slots supported	Maximum supported
Gigabit Ethernet					
7ZT7A00544	AUKG	ThinkSystem 1Gb 2-port RJ45 LOM	2x RJ45	9	1
7ZT7A00545	AUKH	ThinkSystem 1Gb 4-port RJ45 LOM	4x RJ45	9	1
10 Gb Ethernet					
7ZT7A00546	AUKJ	ThinkSystem 10Gb 2-port SFP+ LOM	2x SFP+ bays	9	1
7ZT7A00547	AUKK	ThinkSystem 10Gb 4-port SFP+ LOM	4x SFP+ bays	9	1
7ZT7A00548	AUKL	ThinkSystem 10Gb 2-port Base-T LOM	2x RJ45 (10GBASE-T)	9	1
7ZT7A00549	AUKM	ThinkSystem 10Gb 4-port Base-T LOM	4x RJ45 (10GBASE-T)	9	1

The SR950 also support one ML2 card for 4-socket configurations (slot 8). For 8-socket servers using the 5x16 ML2 riser, the server has two ML2 slots - slot 8 and slot 15. See the I/O expansion options section for details.

The ML2 card in slot 8 supports NC-SI however the ML2 card in slot 15 does not support NC-SI.

The following table lists the supported ML2 adapters.

Table 43. Supported ML2 adapters

Part number	Feature code	Description	Bus width	Slots supported	Maximum supported†
Gigabit Ethernet					
7ZT7A00536	AUKW	ThinkSystem Intel I350-T4 ML2 1Gb 4-Port RJ45 Ethernet Adapter	PCIe 3.0 x8	8, 15	1 / 2
10 Gb Ethernet					
00JY940	ATRH	Intel X710-DA2 ML2 2x10GbE SFP+ Adapter	PCIe 3.0 x8	8, 15	1 / 2
7ZT7A00497	AUKQ	ThinkSystem Broadcom 57416 10GBASE-T 2-Port ML2 Ethernet Adapter	PCIe 3.0 x8	8, 15	1 / 2
01CV770	AU7Z	Emulex VFA5.2 ML2 2x10 GbE SFP+ Adapter and FCoE/iSCSI SW	PCIe 3.0 x8	8, 15	1 / 2
25 Gb Ethernet					
7ZT7A00507	AUKU	ThinkSystem Mellanox ConnectX-4 Lx 10/25GbE SFP28 2-Port ML2 Ethernet Adapter	PCIe 3.0 x8	8, 15	1 / 2
00MN990	ATZR	Mellanox ConnectX-4 Lx 10/25GbE SFP28 1-port ML2 Adapter	PCIe 3.0 x8	8, 15	1 / 2
InfiniBand					
7ZT7A00501	AUKR	ThinkSystem Mellanox ConnectX-3 Pro ML2 FDR 2-Port QSFP VPI Adapter	PCIe 3.0 x8	8, 15	1 / 2

* ThinkSystem servers do not support Features on Demand, so the Emulex VFA5.2 ML2 Dual Port 10GbE SFP+ Adapter, 00AG560, cannot be upgraded to FCoE support. If you need FCoE or iSCSI support, use 01CV770 instead.
† Two ML2 adapters are supported with an 8-socket configuration if the 5x16+ML2 riser is installed in riser slot 2.

The following table lists additional supported network adapters that can be installed in the regular PCIe slots.

Table 44. Supported PCIe Network Adapters

Part number	Feature code	Description	Slots supported	Maximum supported
Gigabit Ethernet				
7ZT7A00482	AUZX	ThinkSystem Broadcom 5720 1GbE RJ45 2-Port PCIe Ethernet Adapter	1-7, 10-14, 16-17	14
7ZT7A00484	AUZV	ThinkSystem Broadcom 5719 1GbE RJ45 4-Port PCIe Ethernet Adapter	1-7, 10-14, 16-17	14
7ZT7A00534	AUZY	ThinkSystem I350-T2 PCIe 1Gb 2-Port RJ45 Ethernet Adapter	1-7, 10-14, 16-17	14
7ZT7A00535	AUZW	ThinkSystem I350-T4 PCIe 1Gb 4-Port RJ45 Ethernet Adapter	1-7, 10-14, 16-17	14
10 Gb Ethernet - 10GBASE-T				
7ZT7A00496	AUKP	ThinkSystem Broadcom 57416 10GBASE-T 2-Port PCIe Ethernet Adapter	1-7, 10-14, 16-17	14
00MM860	ATPX	Intel X550-T2 Dual Port 10GBase-T Adapter	1-7, 10-14, 16-17	14
4XC7A79699	BMXB	ThinkSystem Intel X710-T4L 10GBase-T 4-Port PCIe Ethernet Adapter	1-7, 10-14, 16-17	14

Part number	Feature code	Description	Slots supported	Maximum supported
4XC7A08225	B31G	ThinkSystem QLogic QL41134 PCIe 10Gb 4-Port Base-T Ethernet Adapter	1-7, 10-14, 16-17	14
10 Gb Ethernet - SFP+				
7ZT7A00537	AUKX	ThinkSystem X710-DA2 PCIe 10Gb 2-Port SFP+ Ethernet Adapter	1-7, 10-14, 16-17	14
7ZT7A00493	AUKN	ThinkSystem Emulex OCe14104B-NX PCIe 10Gb 4-Port SFP+ Ethernet Adapter	1-4, 10-14	9
00AG570*	AT7S	Emulex VFA5.2 2x10 GbE SFP+ PCIe Adapter	1-7, 10-14, 16-17	14
00AG580	AT7T	Emulex VFA5.2 2x10 GbE SFP+ Adapter and FCoE/iSCSI SW	1-7, 10-14, 16-17	14
25 Gb Ethernet				
4XC7A08238	B5T0	ThinkSystem Broadcom 57414 10/25GbE SFP28 2-port PCIe Ethernet Adapter	1-7, 10-14, 16-17	14
4XC7A08295	BCD6	ThinkSystem Intel E810-DA2 10/25GbE SFP28 2-Port PCIe Ethernet Adapter	1-7, 10-14, 16-17	14
7XC7A05523	B0WY	ThinkSystem Intel XXV710-DA2 10/25GbE SFP28 2-Port PCIe Ethernet Adapter	1-7, 10-14, 16-17	14
01GR250	AUAJ	Mellanox ConnectX-4 Lx 10/25GbE SFP28 2-port PCIe Ethernet Adapter	1-7, 10-14, 16-17	14
4XC7A08229	B31C	ThinkSystem Mellanox ConnectX-5 Ex 25/40GbE 2-port Low-Latency Adapter	1-6, 10-14	11
4XC7A16683	B5XZ	ThinkSystem Mellanox Innova-2 ConnectX-5 FPGA 25GbE 2-port Adapter	1-6, 10-14	11
4XC7A62580	BE4U	ThinkSystem Mellanox ConnectX-6 Lx 10/25GbE SFP28 2-Port PCIe Ethernet Adapter	1-7, 10-14, 16-17	14
4XC7A62581	BHE2	ThinkSystem Solarflare X2522-Plus 10/25GbE SFP28 2-Port PCIe Ethernet Adapter	1-7, 10-14, 16-17	14
40 Gb Ethernet				
00MM950	ATRN	Mellanox ConnectX-4 Lx 1x40GbE QSFP+ Adapter	1-7, 10-14, 16-17	14
4XC7A08229	B31C	ThinkSystem Mellanox ConnectX-5 Ex 25/40GbE 2-port Low-Latency Adapter	1-6, 10-14	11
100 Gb Ethernet				
4XC7A08248	B8PP	ThinkSystem Mellanox ConnectX-6 Dx 100GbE QSFP56 2-port PCIe Ethernet Adapter	1-6, 10-14	11
FDR InfiniBand				
7ZT7A00500	AUVG	ThinkSystem Mellanox ConnectX-4 PCIe FDR 2-Port QSFP VPI Adapter	1-7, 10-14, 16-17	14
EDR InfiniBand / 100 Gb Ethernet				
00MM960	ATRP	Mellanox ConnectX-4 2x100GbE/EDR IB QSFP28 VPI Adapter	1-6, 10-14	11
HDR100 InfiniBand / 100 Gb Ethernet				
4C57A14177	B4R9,BN36	ThinkSystem Mellanox ConnectX-6 HDR100/100GbE QSFP56 1-port PCIe VPI Adapter	1-7, 10-14, 16-17	14
4C57A14178	B4RA,BN37	ThinkSystem Mellanox ConnectX-6 HDR100/100GbE QSFP56 2-port PCIe VPI Adapter	1-7, 10-14, 16-17	14

Part number	Feature code	Description	Slots supported	Maximum supported
HDR InfiniBand / 200 Gb Ethernet				
4C57A15326	B4RC,BN38	ThinkSystem Mellanox ConnectX-6 HDR/200GbE QSFP56 1-port PCIe 4 VPI Adapter	3, 4	1
4C57A14179	B4RB	ThinkSystem Mellanox HDR/200GbE 2x PCIe Aux Kit (installs with 4C57A15326 to provide the additional PCIe 3.0 x16 needed for HDR)	1-6, 13, 14	1
Omni-Path Architecture				
00WE023	AU0A	Intel OPA 100 Series Single-port PCIe 3.0 x8 HFA	1-7, 10-14, 16-17	14
00WE027	AU0B	Intel OPA 100 Series Single-port PCIe 3.0 x16 HFA	1-6, 10-14	11

* ThinkSystem servers do not support Features on Demand, so the Emulex VFA5.2 2x10 GbE SFP+ PCIe Adapter, 00AG570, cannot be upgraded to FCoE support. If you need FCoE or iSCSI support, use 00AG580 instead.

For more information, including the transceivers and cables that each adapter supports, see the list of Lenovo Press Product Guides in the Networking adapters category:
https://lenovopress.com/servers/options/ethernet

Fibre Channel host bus adapters

The following table lists the Fibre Channel HBAs supported by SR950.

Table 45. Fibre Channel HBAs

Part number	Feature code	Description	Slots supported	Maximum supported
64 Gb Fibre Channel HBAs				
4XC7A77485	BLC1	ThinkSystem Emulex LPe36002 64Gb 2-port PCIe Fibre Channel Adapter	1-7, 10-14, 16-17	14
32 Gb Fibre Channel HBAs				
4XC7A76525	BJ3H	ThinkSystem Emulex LPe35002 32Gb 2-port PCIe Fibre Channel Adapter V2	1-7, 10-14, 16-17	14
4XC7A76498	BJ3G	ThinkSystem Emulex LPe35000 32Gb 1-port PCIe Fibre Channel Adapter v2	1-7, 10-14, 16-17	14
4XC7A08250	B5SX	ThinkSystem Emulex LPe35000 32Gb 1-port PCIe Fibre Channel Adapter	1-7, 10-14, 16-17	14
4XC7A08251	B5SY	ThinkSystem Emulex LPe35002 32Gb 2-port PCIe Fibre Channel Adapter	1-7, 10-14, 16-17	14
7ZT7A00516	AUNS	ThinkSystem QLogic QLE2740 PCIe 32Gb 1-Port SFP+ Fibre Channel Adapter	1-7, 10-14, 16-17	14
7ZT7A00518	AUNU	ThinkSystem QLogic QLE2742 PCIe 32Gb 2-Port SFP+ Fibre Channel Adapter	1-7, 10-14, 16-17	14
7ZT7A00519	AUNV	ThinkSystem Emulex LPe32002-M2-L PCIe 32Gb 2-Port SFP+ Fibre Channel Adapter	1-7, 10-14, 16-17	14
16 Gb Fibre Channel HBAs				
01CV750	ATZB	QLogic 16Gb Enhanced Gen5 FC Single-port HBA	1-7, 10-14, 16-17	14
01CV760	ATZC	QLogic 16Gb Enhanced Gen5 FC Dual-port HBA	1-7, 10-14, 16-17	14
01CV830	ATZU	Emulex 16Gb Gen6 FC Single-port HBA	1-7, 10-14, 16-17	14
01CV840	ATZV	Emulex 16Gb Gen6 FC Dual-port HBA	1-7, 10-14, 16-17	14

For more information, see the list of Lenovo Press Product Guides in the Host bus adapters category: https://lenovopress.com/servers/options/hba

SAS adapters for external storage

The following table lists SAS HBAs and RAID adapters supported by SR950 server for use with external storage.

Table 46. Adapters for external storage

Part number	Feature code	Description	Slots supported	Maximum supported
SAS HBAs				
7Y37A01090	AUNR	ThinkSystem 430-8e SAS/SATA 12Gb HBA	1-7, 10-14, 16-17	14
7Y37A01091	AUNN	ThinkSystem 430-16e SAS/SATA 12Gb HBA	1-7, 10-14, 16-17	14
4Y37A78837	BNWK	ThinkSystem 440-8e SAS/SATA PCIe Gen4 12Gb HBA	1-7, 10-14, 16-17	14
4Y37A09724	B8P7	ThinkSystem 440-16e SAS/SATA PCIe Gen4 12Gb HBA	1-7, 10-14, 16-17	14
External RAID adapters				
7Y37A01087	AUNQ	ThinkSystem RAID 930-8e 4GB Flash PCIe 12Gb Adapter	1-7, 10-14, 16-17	4*
4Y37A78836	BNWJ	ThinkSystem RAID 940-8e 4GB Flash PCIe Gen4 12Gb Adapter	1-7, 10-14, 16-17	4*

* Maximum is 4 adapters because there are only 4 supercap holders in the server, mounted on the side of the two riser cards.

Mixing storage adapter families: The following HBA/RAID adapter combinations are supported:

- X30 external adapters with other X30 adapters (internal or external)
- X40 external adapters with other X40 adapters (internal or external)
- X40 external adapters with X350 internal adapters

The following HBA/RAID adapter combinations are *not* supported:

- X30 adapters (internal or external) with X40 adapters (internal or external)
- X30 adapters (internal or external) with X350 internal adapters

For a comparison of the functions of the supported external storage adapters, see the ThinkSystem RAID Adapter and HBA Reference:
https://lenovopress.com/lp1288#sr950-support=SR950&internal-or-external-ports=External

For more information, see the list of Lenovo Press Product Guides in the Host bus adapters and RAID adapters categories:
https://lenovopress.com/servers/options/hba
https://lenovopress.com/servers/options/raid

Flash storage adapters

The server supports the PCIe Flash Storage adapters listed in the following table.

Table 47. Flash Storage adapters

Part number	Feature code	Description	Slots supported	Maximum supported
Mainstream NVMe PCIe Adapters - Optimized for mixed-intensive application workloads with an endurance of 3-5 DWPD				
4XB7A14075	B8JH	ThinkSystem HHHL PM1735 1.6TB Mainstream NVMe PCIe4.0 x8 Flash Adapter	1-7, 10-14, 16-17	14
4XB7A14076	B8HW	ThinkSystem HHHL PM1735 3.2TB Mainstream NVMe PCIe4.0 x8 Flash Adapter	1-7, 10-14, 16-17	14
4XB7A14077	B96M	ThinkSystem HHHL PM1735 6.4TB Mainstream NVMe PCIe4.0 x8 Flash Adapter	1-7, 10-14, 16-17	14
4XB7A38240	BCGL	ThinkSystem HHHL Kioxia CM5-V 6.4TB Mainstream NVMe PCIe3.0 x4 Flash Adapter	1-7, 10-14, 16-17	14

For details about these adapters, see the Lenovo Press product guides in the Flash Adapters category: https://lenovopress.com/servers/options/ssdadapter

GPU adapters and coprocessors

Full-length adapter cards such as graphics processing units (GPUs) do not physically fit in the server and are not supported.

Cooling

The SR950 uses a set of 60mm hot-swap single-rotor fans for system-wide cooling. Each compute tray or storage tray houses 6 hot-swap fans. The 6 fans in the compute tray are N+1 redundant, meaning that a single fan failure is tolerated in each compute tray.

Fans are located internal to the server immediately in front of the compute system boards, but are accessible from the front of the server by the long handle attached to the fan. As the handle is pulled out, the attached fan rotates from vertical orientation to horizontal orientation, allowing the fan to be removed from the system using the handle, as shown below.

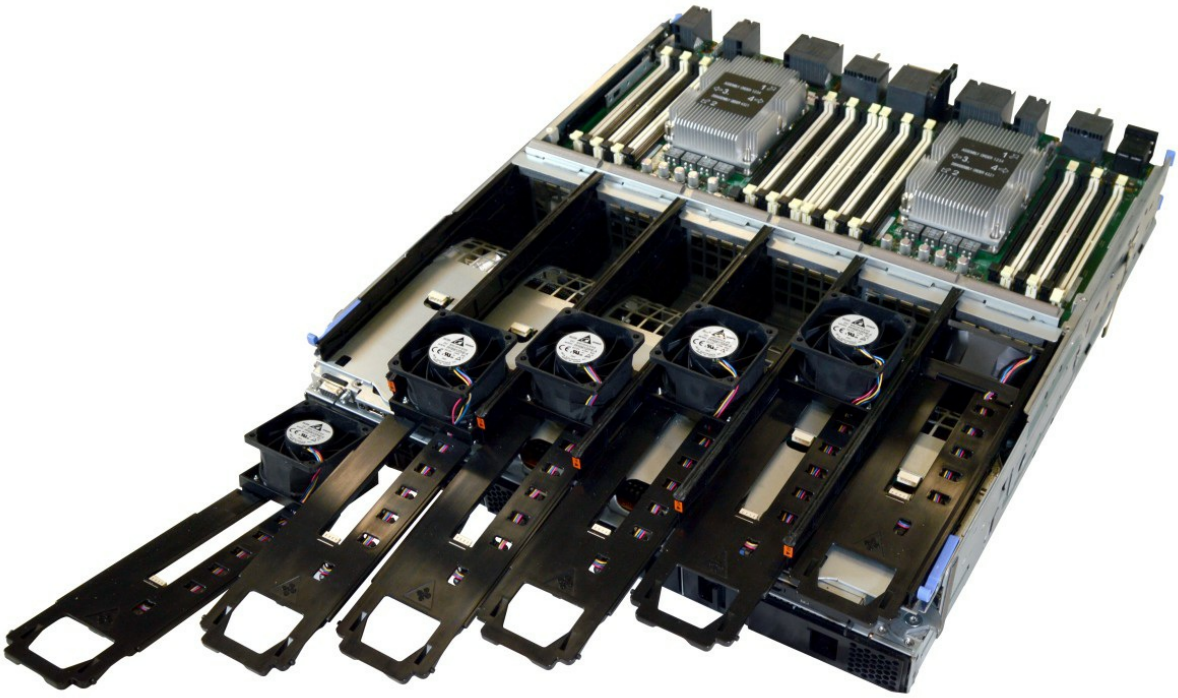

Figure 21. Six fans installed in each compute tray (lower compute tray shown)

New SR950 servers with second-generation Intel Xeon Scalable processors will use 19K RPM fans. These faster fans ensure that all eight-socket configurations will run up to their supported ASHRAE ambient temperatures as stated in the Operating environment section.

Note: SR950 servers that were upgraded to second-generation Intel Xeon Scalable processors from first-generation processors will still use the original 16K RPM fans and will continue to have the situation where an eight-socket 205W processor configuration may experience a slight drop in performance under extreme workloads when the ambient temperature is above 30°C.

Power supplies

The server supports up to four hot-swap power supplies. Power supplies are N+N redundant, which means that if the server has four power supplies installed, then the server can continue operation even with two failed power supplies, or if the utility service that feeds those two power supplies goes offline.

All power supplies installed in a server must have the same capacity (for example all 1600W).

Table 48. Power supply options

Part number	Feature code	Description	Maximum supported	110V AC	220V AC	240V DC China only
7N67A00885	AVNV	1100W Platinum (230V/115V) Power Supply	4	Yes	Yes	Yes
7N67A00886	AUPJ	1600W Platinum Power Supply (200-240VAC only)	4	No	Yes	Yes
7N67A00887	B5KD	2000W Platinum Power Supply (200-240VAC only)	4	No	Yes	Yes

The 1100W power supply is auto-sensing and supports both 110V AC (100-127V 50/60 Hz) and 220V AC (200-240V 50/60 Hz) power.

Note: At 100-127 V AC input, the 1100W power supply is limited to 1050W.

Power supply options do not include a power cord. For models of the SR950, the inclusion of a power cords is model dependent. Configure-to-order models can be configured without a power cord if desired.

See Physical and electrical specifications for additional information.

Tip: Use Lenovo Capacity Planner to determine exactly what power your server needs: https://datacentersupport.lenovo.com/us/en/products/solutions-and-software/software/lenovo-capacity-planner/solutions/ht504651

Power cords

Line cords and rack power cables with C13 connectors can be ordered as listed in the following table.

110V customers: If you plan to use the 1100W power supply with a 110V power source, select a power cable that is rated above 10A. Power cables that are rated at 10A or below are not supported with 110V power.

Table 49. Power cords

Part number	Feature code	Description
Rack cables - C13 to C14		
SL67B08593	BPHZ	0.5m, 10A/100-250V, C13 to C14 Jumper Cord
00Y3043	A4VP	1.0m, 10A/100-250V, C13 to IEC 320-C14 Rack Power Cable
4L67A08367	B0N5	1.0m, 13A/100-250V, C13 to C14 Jumper Cord
39Y7937	6201	1.5m, 10A/100-250V, C13 to IEC 320-C14 Rack Power Cable
4L67A08368	B0N6	1.5m, 13A/100-250V, C13 to C14 Jumper Cord
4L67A08365	B0N4	2.0m, 10A/100-250V, C13 to IEC 320-C14 Rack Power Cable
4L67A08369	6570	2.0m, 13A/100-250V, C13 to C14 Jumper Cord
4L67A08366	6311	2.8m, 10A/100-250V, C13 to IEC 320-C14 Rack Power Cable
4L67A08370	6400	2.8m, 13A/100-250V, C13 to C14 Jumper Cord
39Y7932	6263	4.3m, 10A/100-250V, C13 to IEC 320-C14 Rack Power Cable
4L67A08371	6583	4.3m, 13A/100-250V, C13 to C14 Rack Power Cable
Rack cables - C13 to C14 (Y-cable)		
00Y3046	A4VQ	1.345m, 2X C13 to C14 Jumper Cord, Rack Power Cable

Part number	Feature code	Description
00Y3047	A4VR	2.054m, 2X C13 to C14 Jumper Cord, Rack Power Cable
Rack cables - C13 to C20		
39Y7938	6204	2.8m, 10A/100-250V, C13 to IEC 320-C20 Rack Power Cable
Rack cables - C13 to C20 (Y-cable)		
47C2491	A3SW	1.2m, 16A/100-250V, 2 Short C13s to Short C20 Rack Power Cable
47C2492	A3SX	2.5m, 16A/100-250V, 2 Long C13s to Short C20 Rack Power Cable
47C2493	A3SY	2.8m, 16A/100-250V, 2 Short C13s to Long C20 Rack Power Cable
47C2494	A3SZ	4.1m, 16A/100-250V, 2 Long C13s to Long C20 Rack Power Cable
Line cords		
39Y7930	6222	2.8m, 10A/250V, C13 to IRAM 2073 (Argentina) Line Cord
81Y2384	6492	4.3m 10A/220V, C13 to IRAM 2073 (Argentina) Line Cord
39Y7924	6211	2.8m, 10A/250V, C13 to AS/NZ 3112 (Australia/NZ) Line Cord
81Y2383	6574	4.3m, 10A/230V, C13 to AS/NZS 3112 (Aus/NZ) Line Cord
69Y1988	6532	2.8m, 10A/250V, C13 to NBR 14136 (Brazil) Line Cord
81Y2387	6404	4.3m, 10A/250V, C13 - 2P+Gnd (Brazil) Line Cord
39Y7928	6210	2.8m, 220-240V, C13 to GB 2099.1 (China) Line Cord
81Y2378	6580	4.3m, 10A/220V, C13 to GB 2099.1 (China) Line Cord
39Y7918	6213	2.8m, 10A/250V, C13 to DK2-5a (Denmark) Line Cord
81Y2382	6575	4.3m, 10A/230V, C13 to DK2-5a (Denmark) Line Cord
39Y7917	6212	2.8m, 10A/230V, C13 to CEE7-VII (Europe) Line Cord
81Y2376	6572	4.3m, 10A/230V, C13 to CEE7-VII (Europe) Line Cord
39Y7927	6269	2.8m, 10A/250V, C13(2P+Gnd) (India) Line Cord
81Y2386	6567	4.3m, 10A/240V, C13 to IS 6538 (India) Line Cord
39Y7920	6218	2.8m, 10A/250V, C13 to SI 32 (Israel) Line Cord
81Y2381	6579	4.3m, 10A/230V, C13 to SI 32 (Israel) Line Cord
39Y7921	6217	2.8m, 220-240V, C13 to CEI 23-16 (Italy/Chile) Line Cord
81Y2380	6493	4.3m, 10A/230V, C13 to CEI 23-16 (Italy/Chile) Line Cord
46M2593	A1RE	2.8m, 12A/125V, C13 to JIS C-8303 (Japan) Line Cord
4L67A08362	6495	4.3m, 12A/200V, C13 to JIS C-8303 (Japan) Line Cord
39Y7926	6335	4.3m, 12A/100V, C13 to JIS C-8303 (Japan) Line Cord
39Y7922	6214	2.8m, 10A/250V, C13 to SABS 164 (S Africa) Line Cord
81Y2379	6576	4.3m, 10A/230V, C13 to SABS 164 (South Africa) Line Cord
39Y7925	6219	2.8m, 220-240V, C13 to KETI (S Korea) Line Cord
81Y2385	6494	4.3m, 12A/220V, C13 to KSC 8305 (S. Korea) Line Cord
39Y7919	6216	2.8m, 10A/250V, C13 to SEV 1011-S24507 (Swiss) Line Cord
81Y2390	6578	4.3m, 10A/230V, C13 to SEV 1011-S24507 (Sws) Line Cord
23R7158	6386	2.8m, 10A/125V, C13 to CNS 10917-3 (Taiwan) Line Cord
81Y2375	6317	2.8m, 10A/240V, C13 to CNS 10917-3 (Taiwan) Line Cord
81Y2374	6402	2.8m, 13A/125V, C13 to CNS 60799 (Taiwan) Line Cord
4L67A08363	AX8B	4.3m, 10A 125V, C13 to CNS 10917 (Taiwan) Line Cord
81Y2389	6531	4.3m, 10A/250V, C13 to 76 CNS 10917-3 (Taiwan) Line Cord

Part number	Feature code	Description
81Y2388	6530	4.3m, 13A/125V, C13 to CNS 10917 (Taiwan) Line Cord
39Y7923	6215	2.8m, 10A/250V, C13 to BS 1363/A (UK) Line Cord
81Y2377	6577	4.3m, 10A/230V, C13 to BS 1363/A (UK) Line Cord
90Y3016	6313	2.8m, 10A/120V, C13 to NEMA 5-15P (US) Line Cord
46M2592	A1RF	2.8m, 10A/250V, C13 to NEMA 6-15P Line Cord
00WH545	6401	2.8m, 13A/120V, C13 to NEMA 5-15P (US) Line Cord
4L67A08359	6370	4.3m, 10A/125V, C13 to NEMA 5-15P (US) Line Cord
4L67A08361	6373	4.3m, 10A/250V, C13 to NEMA 6-15P (US) Line Cord
4L67A08360	AX8A	4.3m, 13A/120V, C13 to NEMA 5-15P (US) Line Cord

Integrated virtualization

The server supports booting from an operating system or hypervisor installed on an M.2 solid-state drive. See the M.2 drives section for details and the list of available options.

You can download supported VMware vSphere hypervisor images from the following web page and load it on the M.2 drive using the instructions provided:
https://vmware.lenovo.com/content/custom_iso/

Systems management

The server contains an integrated service processor, XClarity Controller (XCC), which provides advanced service-processor control, monitoring, and alerting functions. The XCC is based on the Pilot4 XE401 baseboard management controller (BMC) using a dual-core ARM Cortex A9 service processor.

Local management

The SR950 offers the front operator panel showing key LED status indicators, as shown in the following figure.

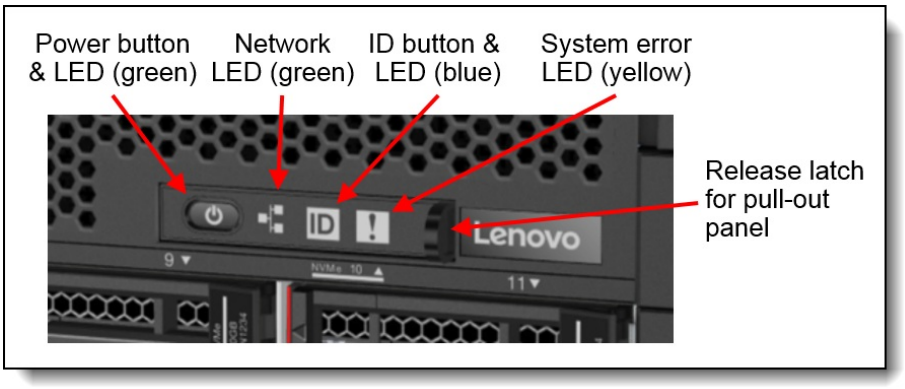

Figure 22. Front operator panel (LCD display panel closed)

The front operator panel pulls out (see the release latch in the above figure) to show an LCD display panel and buttons, as shown in the following figure. The LCD display panel allows quick access to system status, firmware, network, and health information.



Figure 23. LCD display panel

The LCD display and the function buttons give you access to the following information:

- Error messages
- System VPD: machine type & mode, serial number, UUID string
- System firmware levels: UEFI and XCC firmware
- XCC network information: hostname, MAC address, IP address, DNS addresses
- Environmental data: Ambient temperature, CPU temperature, AC input voltage, estimated power consumption
- System reset action

If an environmental condition exceeds a threshold or if a system component fails, XCC illuminates LEDs inside the server to help you diagnose the problem and find the failing part. The SR950 has fault LEDs next to the following components:

- Each processor
- Each memory DIMM
- Each system fan
- Each power supply
- Each rear-facing PCIe slot
- Each drive bay

For local console use, the SR950 has both a front and rear VGA port. Only one can be active at a time. If displays are connected to both VGA ports, the front VGA port takes precedence.

System status with XClarity Mobile

The XClarity Mobile app includes a tethering function where you can connect your Android or iOS device to the server via USB to see the status of the server.

The steps to connect the mobile device are as follows:

1. Enable USB Management on the server, by holding down the ID button for 3 seconds (or pressing the dedicated USB management button if one is present)
2. Connect the mobile device via a USB cable to the server's USB port with the management symbol 
3. In iOS or Android settings, enable Personal Hotspot or USB Tethering
4. Launch the Lenovo XClarity Mobile app

Once connected you can see the following information:

- Server status including error logs (read only, no login required)
- Server management functions (XClarity login credentials required)

Remote management

The server offers a dedicated RJ45 port at the rear of the server for remote management via the XClarity Controller management processor. The port supports 10/100/1000 Mbps speeds.

Remote server management is provided through industry-standard interfaces:

- Intelligent Platform Management Interface (IPMI) Version 2.0
- Simple Network Management Protocol (SNMP) Version 3 (no SET commands; no SMNP v1)
- Common Information Model (CIM-XML)
- Representational State Transfer (REST) support
- Redfish support (DMTF compliant)
- Web browser - HTML 5-based browser interface with NLS support and using a responsive design that is suitable for all devices. Java and ActiveX are not required.

IPMI via the Ethernet port (IPMI over LAN) is supported, however it is disabled by default. For CTO orders you can specify whether you want to the feature enabled or disabled in the factory, using the feature codes listed in the following table.

Table 50. IPMI-over-LAN settings

Part number	Feature code	Description
CTO only	B7XZ	Disable IPMI-over-LAN (default)
CTO only	B7Y0	Enable IPMI-over-LAN

A virtual presence (remote control and remote media) capability also comes standard in the server for remote server management.

The remote control functions include the following:

- Remotely viewing video with graphics resolutions up to 1600x1200 at 75 Hz with up to 23 bits per pixel, regardless of the system state
- Remotely accessing the server using the keyboard and mouse from a remote client
- Capturing blue-screen errors
- International keyboard mapping support
- LDAP-based authentication
- Boot Capture
- Remote mounting of ISO and IMG files
- Virtual console collaboration - Ability for up to 6 remote users to be log into the remote session simultaneously
- Power capping
- License for XClarity Energy Manager

Lenovo XClarity Administrator

Lenovo XClarity Administrator is a centralized resource management solution designed to reduce complexity, speed response, and enhance the availability of Lenovo systems and solutions. It provides agent-free hardware management for ThinkSystem servers, in addition to ThinkServer, System x, and Flex System servers. The administration dashboard is based on HTML 5 and allows fast location of resources so tasks can be run quickly.

Because Lenovo XClarity Administrator does not require any agent software to be installed on the managed endpoints, there are no CPU cycles spent on agent execution, and no memory is used, which means that up to 1GB of RAM and 1 - 2% CPU usage is saved, compared to a typical managed system where an agent is required.

Lenovo XClarity Administrator is an optional software component for the SR950. The software can be downloaded and used at no charge to discover and monitor the SR950 and to manage firmware upgrades.

If software support is required for Lenovo XClarity Administrator, or premium features such as configuration management and operating system deployment are required, Lenovo XClarity Pro software subscription should be ordered. Lenovo XClarity Pro is licensed on a per managed system basis, that is, each managed Lenovo system requires a license.

The following table lists the Lenovo XClarity software license options.

Table 51. Lenovo XClarity Pro ordering information

Part number	Feature code	Description
00MT201	1339	Lenovo XClarity Pro, per Managed Endpoint w/1 Yr SW S&S
00MT202	1340	Lenovo XClarity Pro, per Managed Endpoint w/3 Yr SW S&S
00MT203	1341	Lenovo XClarity Pro, per Managed Endpoint w/5 Yr SW S&S
7S0X000HWW	SAYV	Lenovo XClarity Pro, per Managed Endpoint w/6 Yr SW S&S
7S0X000JWW	SAYW	Lenovo XClarity Pro, per Managed Endpoint w/7 Yr SW S&S

Lenovo XClarity Administrator offers the following standard features that are available at no charge:

- Auto-discovery and monitoring of Lenovo systems
- Firmware updates and compliance enforcement
- External alerts and notifications via SNMP traps, syslog remote logging, and e-mail
- Secure connections to managed endpoints
- NIST 800-131A or FIPS 140-2 compliant cryptographic standards between the management solution and managed endpoints
- Integration into existing higher-level management systems such as cloud automation and orchestration tools through REST APIs, providing extensive external visibility and control over hardware resources
- An intuitive, easy-to-use GUI
- Scripting with Windows PowerShell, providing command-line visibility and control over hardware resources

Lenovo XClarity Administrator offers the following premium features that require an optional Pro license:

- Pattern-based configuration management that allows to define configurations once and apply repeatedly without errors when deploying new servers or redeploying existing servers without disrupting the fabric
- Bare-metal deployment of operating systems and hypervisors to streamline infrastructure provisioning

For more information, refer to the Lenovo XClarity Administrator Product Guide:
http://lenovopress.com/tips1200

Lenovo XClarity Integrators

Lenovo also offers software plug-in modules, Lenovo XClarity Integrators, to manage physical infrastructure from leading external virtualization management software tools including those from Microsoft and VMware.

These integrators are offered at no charge, however if software support is required, a Lenovo XClarity Pro software subscription license should be ordered.

Lenovo XClarity Integrators offer the following additional features:

- Ability to discover, manage, and monitor Lenovo server hardware from VMware vCenter or Microsoft System Center
- Deployment of firmware updates and configuration patterns to Lenovo x86 rack servers and Flex System from the virtualization management tool
- Non-disruptive server maintenance in clustered environments that reduces workload downtime by dynamically migrating workloads from affected hosts during rolling server updates or reboots
- Greater service level uptime and assurance in clustered environments during unplanned hardware events by dynamically triggering workload migration from impacted hosts when impending hardware failures are predicted

For more information about all the available Lenovo XClarity Integrators, see the Lenovo XClarity Administrator Product Guide: https://lenovopress.com/tips1200-lenovo-xclarity-administrator

Lenovo XClarity Essentials

Lenovo offers the following XClarity Essentials software tools that can help you set up, use, and maintain the server at no additional cost:

- Lenovo Essentials OneCLI

  OneCLI is a collection of server management tools that uses a command line interface program to manage firmware, hardware, and operating systems. It provides functions to collect full system health information (including health status), configure system settings, and update system firmware and drivers.

- Lenovo Essentials UpdateXpress

  The UpdateXpress tool is a standalone GUI application for firmware and device driver updates that enables you to maintain your server firmware and device drivers up-to-date and help you avoid unnecessary server outages. The tool acquires and deploys individual updates and UpdateXpress System Packs (UXSPs) which are integration-tested bundles.

- Lenovo Essentials Bootable Media Creator

  The Bootable Media Creator (BOMC) tool is used to create bootable media for offline firmware update.

For more information and downloads, visit the Lenovo XClarity Essentials web page:
http://support.lenovo.com/us/en/documents/LNVO-center

Lenovo XClarity Energy Manager

Lenovo XClarity Energy Manager (LXEM) is a power and temperature management solution for data centers. It is an agent-free, web-based console that enables you to monitor and manage power consumption and temperature in your data center through the management console. It enables server density and data center capacity to be increased through the use of power capping.

LXEM is a licensed product. A single-node LXEM license is included with the XClarity Controller Enterprise version. Because the Enterprise version of XCC is standard in the SR950, a license for XClarity Energy Manager is included.

For more information about XClarity Energy Manager, see the following resources:

- Lenovo Support page:
  https://datacentersupport.lenovo.com/us/en/solutions/lnvo-lxem
- Lenovo Information Center:
  https://sysmgt.lenovofiles.com/help/topic/LXEM/lxem_overview.html?cp=4

Security

The server offers the following security features:

- Administrator and power-on password
- Trusted Platform Module (TPM) supporting both TPM 1.2 and TPM 2.0
- Optional Trusted Cryptographic Module (TCM) or Nationz TPM, available only in China
- Self-encrypting drives with support for IBM Security Key Lifecycle Manager

The server is NIST SP 800-147B compliant.

The plugin TCM and Nationz TPM modules, available only for China customers, are installed in a dedicated socket on the I/O tray, as shown in Figure 9. Ordering information is shown in the following table.

Table 52. Security features

Part number	Feature code	Description
None*	AVKE	ThinkSystem Trusted Cryptographic Module (China customers only)
None*	B22N	ThinkSystem Nationz Trusted Platform Module v2.0

* The component is CTO on pre-configured models only. Not available as a field upgrade.

For SED drives and IBM Security Key Lifecycle Manager support see the SED encryption key management with ISKLM section.

Intel Transparent Supply Chain

Add a layer of protection in your data center and have peace of mind that the server hardware you bring into it is safe authentic and with documented, testable, and provable origin.

Lenovo has one of the world's best supply chains, as ranked by Gartner Group, backed by extensive and mature supply chain security programs that exceed industry norms and US Government standards. Now we are the first Tier 1 manufacturer to offer Intel® Transparent Supply Chain in partnership with Intel, offering you an unprecedented degree of supply chain transparency and assurance.

To enable Intel Transparent Supply Chain for the Intel-based servers in your order, add the following feature code in the DCSC configurator, under the Security tab.

Table 53. Intel Transparent Supply Chain ordering information

Feature code	Description
BB0P	Intel Transparent Supply Chain

For more information on this offering, see the paper *Introduction to Intel Transparent Supply Chain on Lenovo ThinkSystem Servers*, available from https://lenovopress.com/lp1434-introduction-to-intel-transparent-supply-chain-on-thinksystem-servers.

Rack installation

All models of the SR950 include a rail kit for installation in a 19-inch rack cabinet. The contents of the kits are shown in the following figure.

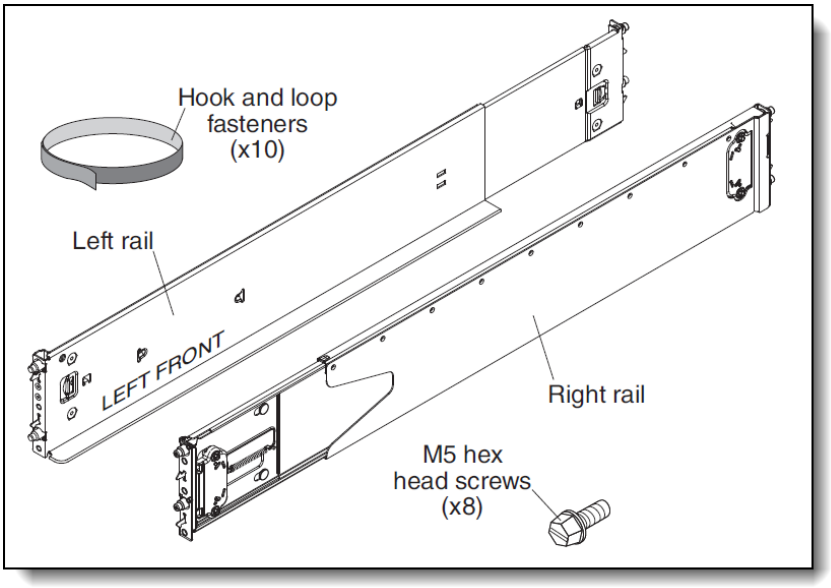

Figure 24. SR950 rail kit

Optionally available is the SR950 shipping bracket kit, which is used when the server is installed in a rack and the complete rack is then shipped to the client.

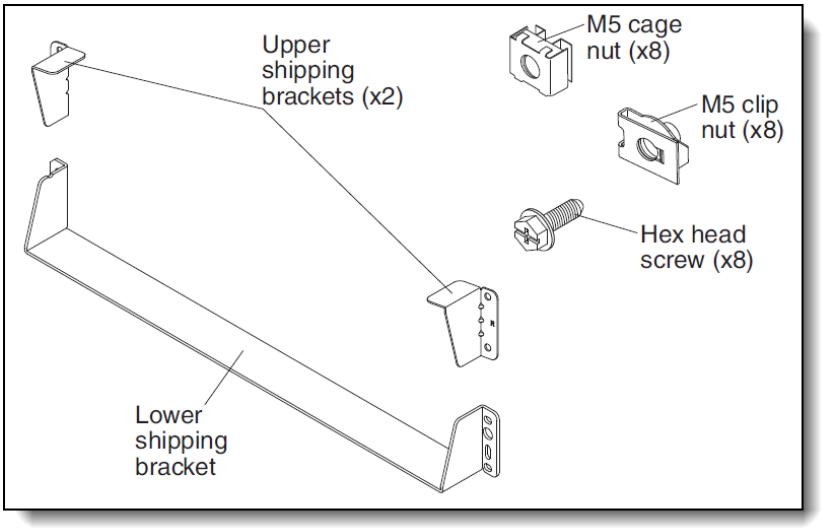

Figure 25. SR950 shipping bracket kit

Table 54. Shipping bracket kit

Part number	Feature code	Description
7XF7A03967	AUL5	ThinkSystem SR950 Shipping Bracket

Operating system support

The SR950 supports the following operating systems:

- Microsoft Windows Server 2016
- Microsoft Windows Server 2019
- Microsoft Windows Server 2022
- Red Hat Enterprise Linux 7.6
- Red Hat Enterprise Linux 7.7
- Red Hat Enterprise Linux 7.8
- Red Hat Enterprise Linux 7.9
- Red Hat Enterprise Linux 8.0
- Red Hat Enterprise Linux 8.1
- Red Hat Enterprise Linux 8.2
- Red Hat Enterprise Linux 8.3
- Red Hat Enterprise Linux 8.4
- Red Hat Enterprise Linux 8.5
- Red Hat Enterprise Linux 8.6
- Red Hat Enterprise Linux 8.7
- Red Hat Enterprise Linux 8.8
- Red Hat Enterprise Linux 9.0
- Red Hat Enterprise Linux 9.1
- Red Hat Enterprise Linux 9.2
- SUSE Linux Enterprise Server 12 SP4
- SUSE Linux Enterprise Server 12 SP5
- SUSE Linux Enterprise Server 12 Xen SP4
- SUSE Linux Enterprise Server 12 Xen SP5
- SUSE Linux Enterprise Server 15
- SUSE Linux Enterprise Server 15 SP1
- SUSE Linux Enterprise Server 15 SP2
- SUSE Linux Enterprise Server 15 SP3
- SUSE Linux Enterprise Server 15 SP4
- SUSE Linux Enterprise Server 15 SP5
- SUSE Linux Enterprise Server 15 Xen
- SUSE Linux Enterprise Server 15 Xen SP1
- SUSE Linux Enterprise Server 15 Xen SP2
- SUSE Linux Enterprise Server 15 Xen SP3
- SUSE Linux Enterprise Server 15 Xen SP4
- SUSE Linux Enterprise Server 15 Xen SP5
- Ubuntu 22.04 LTS 64-bit
- VMware ESXi 6.5 U2
- VMware ESXi 6.5 U3
- VMware ESXi 6.7 U1
- VMware ESXi 6.7 U2
- VMware ESXi 6.7 U3
- VMware ESXi 7.0
- VMware ESXi 7.0 U1
- VMware ESXi 7.0 U2
- VMware ESXi 7.0 U3
- VMware ESXi 8.0
- VMware ESXi 8.0 U1
- VMware ESXi 8.0 U2

For a complete list of supported, certified and tested operating systems, plus additional details and links to relevant web sites, see the Operating System Interoperability Guide:
https://lenovopress.com/osig#servers=sr950-7x11-7x12-7x13-sp-gen-2

For configure-to-order configurations, the server can be preloaded with VMware ESXi installed on M.2 cards. Ordering information is listed in the following table.

Table 55. VMware ESXi preload

Part number	Feature code	Description
CTO only	B3VW	VMware ESXi 6.5 U2 (Factory Installed)
CTO only	B6U0	VMware ESXi 6.5 U3 (factory installed)
CTO only	B4XA	VMware ESXi 6.7 U1 (Factory Installed)
CTO only	B6U1	VMware ESXi 6.7 U2 (factory installed)
CTO only	B88T	VMware ESXi 6.7 U3 (factory installed)
CTO only	BBZG	VMware ESXi 7.0 (Factory Installed)
CTO only	BE5E	VMware ESXi 7.0 U1 (Factory Installed)
CTO only	BHSR	VMware ESXi 7.0 U2 (Factory Installed)
CTO only	BMEY	VMware ESXi 7.0 U3 (Factory Installed)
CTO only	BMT5	VMware ESXi 8.0 (Factory Installed)
CTO only	BQ8S	VMware ESXi 8.0 U1 (Factory Installed)

Physical and electrical specifications

The SR950 has the following overall physical dimensions, excluding components that extend outside the standard chassis, such as EIA flanges, front security bezel (if any), and power supply handles:

- Width: 447 mm (17.6 inches)
- Height: 176 mm (6.9 inches)
- Depth: 851 mm (33.5 inches)

The following table lists the detailed dimensions. See the figure below for the definition of each dimension.

Table 56. Detailed dimensions

Dimension	Description
483 mm	X_a = Width, to the outsides of the front EIA flanges
447 mm	X_b = Width, to the rack rail mating surfaces
447 mm	X_c = Width, to the outer most chassis body feature
176 mm	Ya = Height, from the bottom of chassis to the top of the chassis
780 mm	Za = Depth, from the rack flange mating surface to the rearmost I/O port surface
815 mm	Zb = Depth, from the rack flange mating surface to the rearmost feature of the chassis body
817 mm	Zc = Depth, from the rack flange mating surface to the rearmost feature such as power supply handle
36 mm	Zd = Depth, from the forwardmost feature on front of EIA flange to the rack flange mating surface
46 mm	Ze = Depth, from the front of security bezel (if applicable) or forwardmost feature to the rack flange mating surface

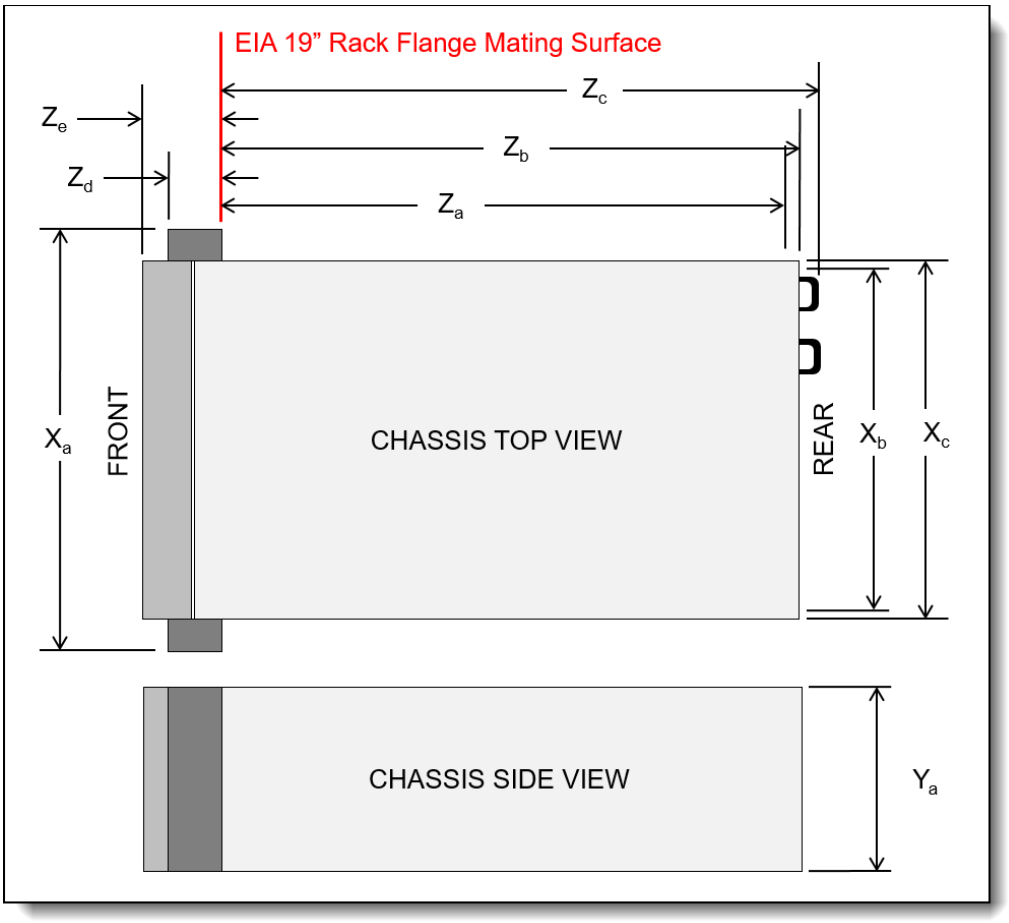

Figure 26. Server dimensions

The shipping dimensions (cardboard packaging) of the SR950 are as follows:

- Width: 610 mm (24.0 inches)
- Height: 557 mm (21.9 inches)
- Depth: 1016 mm (40.0 inches)

The server has the following weight:

- Minimum configuration: 32.6 kg (71.9 lb)
- Maximum configuration: 58.7 kg (129.4 lb)

The server has the following electrical specifications:

- Models with 2000 W AC power supplies:
  - 220 - 240 (nominal) V AC; 50 Hz or 60 Hz; 10 A
  - 200 - 240 (nominal) V AC; 50 Hz or 60 Hz; 11 A*

  *11 A support is in only the following countries and regions: North America, Central America, Ecuador, Guyana, Venezuela, American Samoa, Guam, Micronesia, Palau, Liberia, and Japan
- Models with 1600 W AC power supplies:
  - 200 - 240 (nominal) V AC; 50 Hz or 60 Hz; 8.7 A
- Models with 1100 W AC power supplies:
  - 100 - 127 (nominal) V AC; 50 Hz or 60 Hz; 12.0 A
  - 200 - 240 (nominal) V AC; 50 Hz or 60 Hz; 6.2 A

Operating environment

The ThinkSystem SR950 server is designed to ensure thermal compliance to ASHRAE A4 ambient environments, however processor models with a TDP of 150W or higher are limted to only ASHRAE A2 conditions.

The following restrictions also apply regarding ASHRAE A3 and A4 support:

- NVMe drives and adapters are supported up to 35°C only
- 256 GB DIMMs are supported up to 35°C only
- Intel Optane DC Persistent Memory is supported up to 35°C only

Upgrades from first-generation processors: If you are upgrading your SR950 server from first-generation Intel Xeon Scalable processors to an eight-socket configuration of any 205W second-generation processor, you may experience a slight drop in performance under extreme workloads when the ambient temperature is above 30°C. The processors affected by this upgrade thermal limitation are the following processors:

- 8x Intel Xeon Platinum 8268 24C 205W 2.9GHz Processor
- 8x Intel Xeon Platinum 8270 26C 205W 2.6GHz Processor
- 8x Intel Xeon Platinum 8280 28C 205W 2.7GHz Processor
- 8x Intel Xeon Platinum 8280L 28C 205W 2.7GHz Processor
- 8x Intel Xeon Platinum 8280M 28C 205W 2.7GHz Processor

This thermal restriction does not apply to new SR950 orders (with the upgraded system boards and 19K RPM fans).

Temperature and humidity

The server is supported operating in the following environments:

- ASHRAE A2:
  - Temperature: 10°C to 35°C
  - Humidity: 8% to 80%
  - Altitude 0-3000 m (10,000 ft), derated 1°C per 300 m above 950 m
- ASHRAE A3:
  - Temperature: 5°C to 40°C
  - Humidity: 8% to 85%
  - Altitude 0-3000 m (10,000 ft), derated 1°C per 175 m above 950 m
- ASHRAE A4:
  - Temperature: 5°C to 45°C
  - Humidity: 8% to 90%
  - Altitude 0-3000 m (10,000 ft), derated 1°C per 125 m above 950 m

Non-operating environment support:

- Without packaging:
  - Temperature: -10 °C to 60 °C
  - Humidity: 8 to 90%
- Storage with packaging:
  - Temperature: -40 °C to 70 °C
  - Humidity: 8 to 90%

Heat output

The server generates the following heat/thermal output:

- Minimum configuration: 938 BTU/hr, 275 W
- Typical configuration: 3412 BTU/hr, 1000 W

- Full configuration: 21,838 BTU/hr, 6400 W

Shock and vibration

The server has the following vibration and shock limits:

- Vibration:
  - Operating: 0.21 G rms at 5 Hz to 500 Hz for 15 minutes across 3 axes
  - Non-operating: 1.04 G rms at 2 Hz to 200 Hz for 15 minutes across 6 surfaces
- Shock:
  - Operating: 15 G for 3 milliseconds in each direction (positive and negative X, Y, and Z axes)
  - Non-operating:
    - 12 kg - 22 kg: 50 G for 152 in./sec velocity change across 6 surfaces
    - 23 kg - 31 kg: 35 G for 152 in./sec velocity change across 6 surfaces

Particulate contamination

Airborne particulates (including metal flakes or particles) and reactive gases acting alone or in combination with other environmental factors such as humidity or temperature might damage the system that might cause the system to malfunction or stop working altogether.

The following specifications indicate the limits of particulates that the system can tolerate:

- Reactive gases:
  - The reactivity rate of copper coupons shall be less than 200 Angstroms per month (Å/month)
  - The reactivity rate of silver coupons shall be less than 200 Å/month
- Airborne particulates:
  - The room air should be continuously filtered with MERV 8 filters.
  - Air entering a data center should be filtered with MERV 11 or preferably MERV 13 filters.
  - The deliquescent relative humidity of the particulate contamination should be more than 60% RH
  - Data centers must be free of zinc whiskers

For additional information, see the Specifications section of the Setup Guide for the server, available from the Lenovo Documents site, https://pubs.lenovo.com/

Warranty and Support

The ThinkSystem SR950 server has the following choice of warranties:

- Machine type 7X11: 1-year warranty
- Machine type 7X12: 3-year warranty
- Machine type 7X13: 3-year warranty

The standard warranty terms are customer-replaceable unit (CRU) and onsite (for field-replaceable units FRUs only) with standard call center support during normal business hours and 9x5 Next Business Day Parts Delivered.

Lenovo’s additional support services provide a sophisticated, unified support structure for your data center, with an experience consistently ranked number one in customer satisfaction worldwide. Available offerings include:

- **Premier Support**

  Premier Support provides a Lenovo-owned customer experience and delivers direct access to technicians skilled in hardware, software, and advanced troubleshooting, in addition to the following:

  - Direct technician-to-technician access through a dedicated phone line
  - 24x7x365 remote support
  - Single point of contact service
  - End to end case management
  - Third-party collaborative software support
  - Online case tools and live chat support
  - On-demand remote system analysis

- **Warranty Upgrade (Preconfigured Support)**

  Services are available to meet the on-site response time targets that match the criticality of your systems.

  - 3, 4, or 5 years of service coverage
  - 1-year or 2-year post-warranty extensions
  - **Foundation Service**: 9x5 service coverage with next business day onsite response. YourDrive YourData is an optional extra (see below).
  - **Essential Service:** 24x7 service coverage with 4-hour onsite response or 24-hour committed repair (available only in select markets). Bundled with YourDrive YourData.
  - **Advanced Service:** 24x7 service coverage with 2-hour onsite response or 6-hour committed repair (available only in select markets). Bundled with YourDrive YourData.

- **Managed Services**

  Lenovo Managed Services provides continuous 24x7 remote monitoring (plus 24x7 call center availability) and proactive management of your data center using state-of-the-art tools, systems, and practices by a team of highly skilled and experienced Lenovo services professionals.

  Quarterly reviews check error logs, verify firmware & OS device driver levels, and software as needed. We'll also maintain records of latest patches, critical updates, and firmware levels, to ensure you systems are providing business value through optimized performance.

- **Technical Account Management (TAM)**

  A Lenovo Technical Account Manager helps you optimize the operation of your data center based on a deep understanding of your business. You gain direct access to your Lenovo TAM, who serves as your single point of contact to expedite service requests, provide status updates, and furnish reports to track incidents over time. In addition, your TAM will help proactively make service recommendations and manage your service relationship with Lenovo to make certain your needs are met.

- **Enterprise Server Software Support**

  Enterprise Software Support is an additional support service providing customers with software support on Microsoft, Red Hat, SUSE, and VMware applications and systems. Around the clock availability for critical problems plus unlimited calls and incidents helps customers address challenges fast, without incremental costs. Support staff can answer troubleshooting and diagnostic questions, address product comparability and interoperability issues, isolate causes of problems, report defects to software vendors, and more.

- **YourDrive YourData**

  Lenovo's YourDrive YourData is a multi-drive retention offering that ensures your data is always under your control, regardless of the number of drives that are installed in your Lenovo server. In the unlikely event of a drive failure, you retain possession of your drive while Lenovo replaces the failed drive part. Your data stays safely on your premises, in your hands. The YourDrive YourData service can be purchased in convenient bundles and is optional with Foundation Service. It is bundled with Essential Service and Advanced Service.

- **Health Check**

  Having a trusted partner who can perform regular and detailed health checks is central to maintaining efficiency and ensuring that your systems and business are always running at their best. Health Check supports Lenovo-branded server, storage, and networking devices, as well as select Lenovo-supported products from other vendors that are sold by Lenovo or a Lenovo-Authorized Reseller.

Examples of region-specific warranty terms are second or longer business day parts delivery or parts-only base warranty.

If warranty terms and conditions include onsite labor for repair or replacement of parts, Lenovo will dispatch a service technician to the customer site to perform the replacement. Onsite labor under base warranty is limited to labor for replacement of parts that have been determined to be field-replaceable units (FRUs). Parts that are determined to be customer-replaceable units (CRUs) do not include onsite labor under base warranty.

If warranty terms include parts-only base warranty, Lenovo is responsible for delivering only replacement parts that are under base warranty (including FRUs) that will be sent to a requested location for self-service. Parts-only service does not include a service technician being dispatched onsite. Parts must be changed at customer's own cost and labor and defective parts must be returned following the instructions supplied with the spare parts.

Lenovo Service offerings are region-specific. Not all preconfigured support and upgrade options are available in every region. For information about Lenovo service upgrade offerings that are available in your region, refer to the following resources:

- Service part numbers in Lenovo Data Center Solution Configurator (DCSC):
  http://dcsc.lenovo.com/#/services
- Lenovo Services Availability Locator
  http://lenovolocator.com/

For service definitions, region-specific details, and service limitations, please refer to the following documents:

- Lenovo Statement of Limited Warranty for Infrastructure Solutions Group (ISG) Servers and System Storage
  http://pcsupport.lenovo.com/us/en/solutions/ht503310
- Lenovo Data Center Services Agreement
  http://support.lenovo.com/us/en/solutions/ht116628

Services

Lenovo Services is a dedicated partner to your success. Our goal is to reduce your capital outlays, mitigate your IT risks, and accelerate your time to productivity.

Note: Some service options may not be available in all markets or regions. For more information, go to https://www.lenovo.com/services. For information about Lenovo service upgrade offerings that are available in your region, contact your local Lenovo sales representative or business partner.

Here's a more in-depth look at what we can do for you:

- **Asset Recovery Services**

  Asset Recovery Services (ARS) helps customers recover the maximum value from their end-of-life equipment in a cost-effective and secure way. On top of simplifying the transition from old to new equipment, ARS mitigates environmental and data security risks associated with data center equipment disposal. Lenovo ARS is a cash-back solution for equipment based on its remaining market value, yielding maximum value from aging assets and lowering total cost of ownership for your customers. For more information, see the ARS page, https://lenovopress.com/lp1266-reduce-e-waste-and-grow-your-bottom-line-with-lenovo-ars.

- **Assessment Services**

  An Assessment helps solve your IT challenges through an onsite, multi-day session with a Lenovo technology expert. We perform a tools-based assessment which provides a comprehensive and thorough review of a company's environment and technology systems. In addition to the technology based functional requirements, the consultant also discusses and records the non-functional business requirements, challenges, and constraints. Assessments help organizations like yours, no matter how large or small, get a better return on your IT investment and overcome challenges in the ever-changing technology landscape.

- **Design Services**

  Professional Services consultants perform infrastructure design and implementation planning to support your strategy. The high-level architectures provided by the assessment service are turned into low level designs and wiring diagrams, which are reviewed and approved prior to implementation. The implementation plan will demonstrate an outcome-based proposal to provide business capabilities through infrastructure with a risk-mitigated project plan.

- **Basic Hardware Installation**

  Lenovo experts can seamlessly manage the physical installation of your server, storage, or networking hardware. Working at a time convenient for you (business hours or off shift), the technician will unpack and inspect the systems on your site, install options, mount in a rack cabinet, connect to power and network, check and update firmware to the latest levels, verify operation, and dispose of the packaging, allowing your team to focus on other priorities.

- **Deployment Services**

  When investing in new IT infrastructures, you need to ensure your business will see quick time to value with little to no disruption. Lenovo deployments are designed by development and engineering teams who know our Products & Solutions better than anyone else, and our technicians own the process from delivery to completion. Lenovo will conduct remote preparation and planning, configure & integrate systems, validate systems, verify and update appliance firmware, train on administrative tasks, and provide post-deployment documentation. Customer’s IT teams leverage our skills to enable IT staff to transform with higher level roles and tasks.

- **Integration, Migration, and Expansion Services**

  Move existing physical & virtual workloads easily, or determine technical requirements to support increased workloads while maximizing performance. Includes tuning, validation, and documenting ongoing run processes. Leverage migration assessment planning documents to perform necessary migrations.

Regulatory compliance

The SR950 server conforms to the following regulations:

- FCC - Verified to comply with Part 15 of the FCC Rules, Class A
- Canada ICES-003, issue 6, Class A
- UL/IEC 60950-1
- CSA C22.2 No. 60950-1
- IEC 62368-1 2014(CB Certificate and CB Test Report)
- NOM-019
- Argentina IEC60950-1
- Japan VCCI, Class A
- Australia/New Zealand AS/NZS CISPR 32, Class A; AS/NZS 60950.1
- China CCC GB4943.1, GB9254 Class A, GB17625.1
- Taiwan BSMI CNS13438, Class A; CNS14336-1 CNS15663
- Korea KN32, Class A; KN35
- Russia, Belorussia and Kazakhstan, TR CU 020/2011 (for EMC) and TR CU 004/2011 (for safety)
- IEC 60950-1 (CB Certificate and CB Test Report)
- CE Mark (EN55032 Class A, EN60950-1, EN55024, EN61000-3-2, EN61000-3-3)
- CISPR 32, Class A
- TUV-GS (EN60950-1, IEC60950-1, EK1-ITB2000)
- RoHS Directive
- Energy Star 3.0
- ErP lot3
- JESL

External drive enclosures

The server supports attachment to external drive enclosures using a RAID controller with external ports or a SAS host bus adapter. Adapters supported by the server are listed in the SAS adapters for external storage section.

Note: Information provided in this section is for ordering reference purposes only. For the operating system and adapter support details, refer to the interoperability matrix for a particular storage enclosure that can be found on the Lenovo Data Center Support web site:
http://datacentersupport.lenovo.com

Table 57. External drive enclosures

Model	Description
4587HC1	Lenovo Storage D1212 Disk Expansion Enclosure (2U enclosure wth 12x LFF drive bays)
4587HC2	Lenovo Storage D1224 Disk Expansion Enclosure (2U enclosure wth 24x SFF drive bays)
6413HC1	Lenovo Storage D3284 High Density Expansion Enclosure (5U enclosure wth 84x LFF drive bays)
7DAHCTO1WW	Lenovo ThinkSystem D4390 Direct Attached Storage (4U enclosure wth 90x LFF drive bays)

For details about supported drives, adapters, and cables, see the following Lenovo Press Product Guides:

- Lenovo Storage D1212 and D1224
  http://lenovopress.lenovo.com/lp0512
- Lenovo Storage D3284
  http://lenovopress.lenovo.com/lp0513
- Lenovo ThinkSystem D4390
  https://lenovopress.lenovo.com/lp1681

External storage systems

Lenovo offers the ThinkSystem DE Series and ThinkSystem DM Series external storage systems for high-performance storage. See the DE Series and DM Series product guides for specific controller models, expansion enclosures and configuration options:

- ThinkSystem DE Series Storage
  https://lenovopress.com/storage/thinksystem/de-series#rt=product-guide
- ThinkSystem DM Series Storage
  https://lenovopress.com/storage/thinksystem/dm-series#rt=product-guide

External backup units

The server supports both USB-attached RDX backup units and SAS-attached tape drives.

The following table lists the available external SAS tape backup options.

Tip: Verify the end-to-end support of an IBM tape backup solution through the IBM System Storage Interoperation Center (SSIC): http://www.ibm.com/systems/support/storage/ssic

Table 58. External SAS backup options

Part number	Description
External SAS tape backup drives	
6160S7E	IBM TS2270 Tape Drive Model H7S
6160S8E	IBM TS2280 Tape Drive Model H8S
6160S9E	IBM TS2290 Tape Drive Model H9S
External SAS tape backup autoloaders	
6171S7R	IBM TS2900 Tape Autoloader w/LTO7 HH SAS
6171S8R	IBM TS2900 Tape Autoloader w/LTO8 HH SAS
6171S9R	IBM TS2900 Tape Autoloader w/LTO9 HH SAS
External tape backup libraries	
6741A1F	IBM TS4300 3U Tape Library-Base Unit
SAS backup drives for TS4300 Tape Library	
01KP937	LTO 7 HH SAS Drive
01KP953	LTO 8 HH SAS Drive
02JH836	LTO 9 HH SAS Drive

For more information, see the list of Product Guides in the Backup units category: https://lenovopress.com/servers/options/backup

The following table lists the external RDX backup options available.

Table 59. External RDX dock and cartridges

Part number	Feature code	Description
External RDX docks		
4T27A10725	B32R	ThinkSystem RDX External USB 3.0 Dock (No cartridge included with the drive)
Cartridges		
7TP7A01601	AVF8	ThinkSystem RDX 500GB Cartridge
7TP7A01602	AVF1	ThinkSystem RDX 1TB Cartridge
7TP7A01603	AVF0	ThinkSystem RDX 2TB Cartridge
7TP7A04318	AXD1	ThinkSystem RDX 4TB Cartridge

For more information, see the Lenovo RDX USB 3.0 Disk Backup Solution product guide: https://lenovopress.com/tips0894-rdx-usb-30

Fibre Channel SAN switches

Lenovo offers the ThinkSystem DB Series of Fibre Channel SAN switches for high-performance storage expansion. See the DB Series product guides for models and configuration options:

- ThinkSystem DB Series SAN Switches:
  https://lenovopress.com/storage/switches/rack#rt=product-guide

Uninterruptible power supply units

The following table lists the uninterruptible power supply (UPS) units that are offered by Lenovo.

Table 60. Uninterruptible power supply units

Part number	Description
55941AX	RT1.5kVA 2U Rack or Tower UPS (100-125VAC)
55941KX	RT1.5kVA 2U Rack or Tower UPS (200-240VAC)
55942AX	RT2.2kVA 2U Rack or Tower UPS (100-125VAC)
55942KX	RT2.2kVA 2U Rack or Tower UPS (200-240VAC)
55943AX	RT3kVA 2U Rack or Tower UPS (100-125VAC)
55943KX	RT3kVA 2U Rack or Tower UPS (200-240VAC)
55945KX	RT5kVA 3U Rack or Tower UPS (200-240VAC)
55946KX	RT6kVA 3U Rack or Tower UPS (200-240VAC)
55948KX	RT8kVA 6U Rack or Tower UPS (200-240VAC)
55949KX	RT11kVA 6U Rack or Tower UPS (200-240VAC)
55948PX	RT8kVA 6U 3:1 Phase Rack or Tower UPS (380-415VAC)
55949PX	RT11kVA 6U 3:1 Phase Rack or Tower UPS (380-415VAC)
55943KT†	ThinkSystem RT3kVA 2U Standard UPS (200-230VAC) (2x C13 10A, 2x GB 10A, 1x C19 16A outlets)
55943LT†	ThinkSystem RT3kVA 2U Long Backup UPS (200-230VAC) (2x C13 10A, 2x GB 10A, 1x C19 16A outlets)
55946KT†	ThinkSystem RT6kVA 5U UPS (200-230VAC) (2x C13 10A outlets, 1x Terminal Block output)
5594XKT†	ThinkSystem RT10kVA 5U UPS (200-230VAC) (2x C13 10A outlets, 1x Terminal Block output)

† Only available in China and the Asia Pacific market.

For more information, see the list of Product Guides in the UPS category:
https://lenovopress.com/servers/options/ups

Power distribution units

The following table lists the power distribution units (PDUs) that are offered by Lenovo.

Table 61. Power distribution units

Part number	Feature code	Description	ANZ	ASEAN	Brazil	EET	MEA	RUCIS	WE	HTK	INDIA	JAPAN	LA	NA	PRC
0U Basic PDUs															
00YJ776	ATZY	0U 36 C13/6 C19 24A 1 Phase PDU	N	Y	Y	N	N	N	N	N	N	Y	Y	Y	N
00YJ777	ATZZ	0U 36 C13/6 C19 32A 1 Phase PDU	Y	Y	N	Y	Y	Y	Y	Y	Y	N	N	Y	Y

Part number	Feature code	Description	ANZ	ASEAN	Brazil	EET	MEA	RUCIS	WE	HTK	INDIA	JAPAN	LA	NA	PRC
0U Switched and Monitored PDUs															
00YJ783	AU04	0U 12 C13/12 C19 Switched and Monitored 48A 3 Phase PDU	N	N	Y	N	N	N	Y	N	N	Y	Y	Y	N
00YJ781	AU03	0U 20 C13/4 C19 Switched and Monitored 24A 1 Phase PDU	N	N	Y	N	Y	N	Y	N	N	Y	Y	Y	N
1U Switched and Monitored PDUs															
4PU7A81117	BNDV	1U 18 C19/C13 switched and monitored 48A 3P WYE PDU - ETL	N	N	N	N	N	N	N	N	N	N	N	Y	N
4PU7A77467	BLC4	1U 18 C19/C13 Switched and Monitored 80A 3P Delta PDU	N	N	N	N	N	N	N	N	N	Y	N	Y	N
4PU7A77469	BLC6	1U 12 C19/C13 switched and monitored 60A 3P Delta PDU	N	N	N	N	N	N	N	N	N	N	N	Y	N
4PU7A77468	BLC5	1U 12 C19/C13 switched and monitored 32A 3P WYE PDU	Y	Y	Y	Y	Y	Y	Y	Y	Y	N	Y	Y	Y
4PU7A81118	BNDW	1U 18 C19/C13 switched and monitored 48A 3P WYE PDU - CE	Y	Y	Y	Y	Y	Y	Y	Y	Y	N	Y	N	Y
1U Ultra Density Enterprise PDUs (9x IEC 320 C13 + 3x IEC 320 C19 outlets)															
71763NU	6051	Ultra Density Enterprise C19/C13 PDU 60A/208V/3PH	N	N	Y	N	N	N	N	N	N	Y	Y	Y	N
71762NX	6091	Ultra Density Enterprise C19/C13 PDU Module	Y	Y	Y	Y	Y	Y	Y	Y	Y	Y	Y	Y	Y
1U C13 Enterprise PDUs (12x IEC 320 C13 outlets)															
39Y8941	6010	DPI C13 Enterprise PDU Module (WW)	Y	Y	Y	Y	Y	Y	Y	Y	Y	Y	Y	Y	Y
1U Front-end PDUs (3x IEC 320 C19 outlets)															
39Y8938	6002	DPI Single-phase 30A/120V Front-end PDU (US)	Y	Y	Y	Y	Y	Y	Y	Y	Y	Y	Y	Y	Y
39Y8939	6003	DPI Single-phase 30A/208V Front-end PDU (US)	Y	Y	Y	Y	Y	Y	Y	Y	Y	Y	Y	Y	Y
39Y8934	6005	DPI Single-phase 32A/230V Front-end PDU (International)	Y	Y	Y	Y	Y	Y	Y	Y	Y	Y	Y	Y	Y
39Y8940	6004	DPI Single-phase 60A/208V Front-end PDU (US)	Y	N	Y	Y	Y	Y	Y	N	N	Y	Y	Y	N
39Y8935	6006	DPI Single-phase 63A/230V Front-end PDU (International)	Y	Y	Y	Y	Y	Y	Y	Y	Y	Y	Y	Y	Y
1U NEMA PDUs (6x NEMA 5-15R outlets)															
39Y8905	5900	DPI 100-127V NEMA PDU	Y	Y	Y	Y	Y	Y	Y	Y	Y	Y	Y	Y	Y
Line cords for 1U PDUs that ship without a line cord															
40K9611	6504	4.3m, 32A/380-415V, EPDU/IEC 309 3P+N+G 3ph wye (non-US) Line Cord	Y	Y	Y	Y	Y	Y	Y	Y	Y	Y	Y	Y	Y
40K9612	6502	4.3m, 32A/230V, EPDU to IEC 309 P+N+G (non-US) Line Cord	Y	Y	Y	Y	Y	Y	Y	Y	Y	Y	Y	Y	Y
40K9613	6503	4.3m, 63A/230V, EPDU to IEC 309 P+N+G (non-US) Line Cord	Y	Y	Y	Y	Y	Y	Y	Y	Y	Y	Y	Y	Y

Part number	Feature code	Description	ANZ	ASEAN	Brazil	EET	MEA	RUCIS	WE	HTK	INDIA	JAPAN	LA	NA	PRC
40K9614	6500	4.3m, 30A/208V, EPDU to NEMA L6-30P (US) Line Cord	Y	Y	Y	Y	Y	Y	Y	Y	Y	Y	Y	Y	Y
40K9615	6501	4.3m, 60A/208V, EPDU to IEC 309 2P+G (US) Line Cord	N	N	Y	N	N	N	Y	N	N	Y	Y	Y	N
40K9617	6505	4.3m, 32A/230V, Souriau UTG Female to AS/NZ 3112 (Aus/NZ) Line Cord	Y	Y	Y	Y	Y	Y	Y	Y	Y	Y	Y	Y	Y
40K9618	6506	4.3m, 32A/250V, Souriau UTG Female to KSC 8305 (S. Korea) Line Cord	Y	Y	Y	Y	Y	Y	Y	Y	Y	Y	Y	Y	Y

For more information, see the Lenovo Press documents in the PDU category:
https://lenovopress.com/servers/options/pdu

Rack cabinets

The racks supported by the server are listed in the following table.

Table 62. Rack cabinets

Part number	Description	Maximum supported
Rack cabinets currently available		
9308-4EX	42U Enterprise Expansion Rack	10
9308-4PX	42U Enterprise Rack	10
9360-4PX	42U 1200mm Deep Dynamic Rack	10
9361-4PX	42U 1200mm Deep Static Rack	10
9363-4PX	42U 1100mm Dynamic Rack	10
9363-4EX	42U 1100mm Dynamic Expansion Rack	10
Withdrawn rack cabinets		
9360-4EX	42U 1200mm Deep Dynamic Expansion Rack	10
9361-4EX	42U 1200mm Deep Static Expansion Rack	10
9362-4PX	47U 1200mm Deep Static Rack	11
9362-4EX	47U 1200mm Deep Static Expansion Rack	11
9363-4CX	PureFlex System 42U Rack	10
9363-4DX	PureFlex System 42U Expansion Rack	10

For information about these racks, see the Lenovo Rack Cabinet Reference:
https://lenovopress.com/lp0658-lenovo-rack-cabinet-reference

KVM console options

The following table lists the supported KVM consoles.

Table 63. KVM console

Part number	Description
4XF7A84188	ThinkSystem 18.5" LCD Console (with US English keyboard)

The following table lists the available KVM switches and the options that are supported with them.

Table 65. KVM switches and options

Part number	Description
KVM Console switches	
1754D2X	Global 4x2x32 Console Manager (GCM32)
1754D1X	Global 2x2x16 Console Manager (GCM16)
1754A2X	Local 2x16 Console Manager (LCM16)
1754A1X	Local 1x8 Console Manager (LCM8)
Cables for GCM and LCM Console switches	
46M5383	Virtual Media Conversion Option Gen2 (VCO2)
46M5382	Serial Conversion Option (SCO)

For more information, see the list of Product Guides in the KVM Switches and Consoles category:
http://lenovopress.com/servers/options/kvm

Lenovo Financial Services

Lenovo Financial Services reinforces Lenovo's commitment to deliver pioneering products and services that are recognized for their quality, excellence, and trustworthiness. Lenovo Financial Services offers financing solutions and services that complement your technology solution anywhere in the world.

We are dedicated to delivering a positive finance experience for customers like you who want to maximize your purchase power by obtaining the technology you need today, protect against technology obsolescence, and preserve your capital for other uses.

We work with businesses, non-profit organizations, governments and educational institutions to finance their entire technology solution. We focus on making it easy to do business with us. Our highly experienced team of finance professionals operates in a work culture that emphasizes the importance of providing outstanding customer service. Our systems, processes and flexible policies support our goal of providing customers with a positive experience.

We finance your entire solution. Unlike others, we allow you to bundle everything you need from hardware and software to service contracts, installation costs, training fees, and sales tax. If you decide weeks or months later to add to your solution, we can consolidate everything into a single invoice.

Our Premier Client services provide large accounts with special handling services to ensure these complex transactions are serviced properly. As a premier client, you have a dedicated finance specialist who manages your account through its life, from first invoice through asset return or purchase. This specialist develops an in-depth understanding of your invoice and payment requirements. For you, this dedication provides a high-quality, easy, and positive financing experience.

For your region-specific offers, please ask your Lenovo sales representative or your technology provider about the use of Lenovo Financial Services. For more information, see the following Lenovo website:

https://www.lenovo.com/us/en/landingpage/lenovo-financial-services/

Related publications and links

Videos on the ThinkSystem SR950:

- ThinkSystem SR950 Walkthrough:
  https://lenovopress.com/lp0702-thinksystem-sr950-server-video-walkthrough
- ThinkSystem SR950 Ease of Service
  https://lenovopress.com/lp0899-thinksystem-sr950-ease-of-service-video
- Lenovo Engineer discusses the ThinkSystem SR950 Server
  https://www.youtube.com/watch?v=2F5UD0Xr50Q

For more information, see these useful resources:

- Lenovo ThinkSystem SR950 product page:
  https://www.lenovo.com/us/en/data-center/servers/mission-critical/Lenovo-ThinkSystem-SR950/p/77XX7HSSR95
- Interactive 3D Tour of the ThinkSystem SR950:
  https://lenovopress.com/LP0674
- ThinkSystem SR950 drivers and support
  http://datacentersupport.lenovo.com/products/servers/thinksystem/sr950/7x11/downloads
- Lenovo ThinkSystem SR950 product publications:
  http://thinksystem.lenovofiles.com/help/index.jsp
  - Quick Start
  - Rack Installation Guide
  - Setup Guide
  - Hardware Maintenance Manual
  - Messages and Codes Reference
  - Memory Population Reference
- Lenovo Hardware Installation & Removal Videos on the ThinkSystem SR950:
  - YouTube: https://www.youtube.com/playlist?list=PLYV5R7hVcs-DbSYJFY74PoKmph7vgrkKH
  - Youku: https://list.youku.com/albumlist/show/id_50952215
- ServerProven hardware compatibility:
  http://www.lenovo.com/us/en/serverproven

Related product families

Product families related to this document are the following:

- 4-Socket Rack Servers
- 8-Socket Rack Servers
- Mission-Critical Rack Servers
- ThinkSystem SR950 Server

Notices

Lenovo may not offer the products, services, or features discussed in this document in all countries. Consult your local Lenovo representative for information on the products and services currently available in your area. Any reference to a Lenovo product, program, or service is not intended to state or imply that only that Lenovo product, program, or service may be used. Any functionally equivalent product, program, or service that does not infringe any Lenovo intellectual property right may be used instead. However, it is the user's responsibility to evaluate and verify the operation of any other product, program, or service. Lenovo may have patents or pending patent applications covering subject matter described in this document. The furnishing of this document does not give you any license to these patents. You can send license inquiries, in writing, to:

Lenovo (United States), Inc.
8001 Development Drive
Morrisville, NC 27560
U.S.A.
Attention: Lenovo Director of Licensing

LENOVO PROVIDES THIS PUBLICATION ”AS IS” WITHOUT WARRANTY OF ANY KIND, EITHER EXPRESS OR IMPLIED, INCLUDING, BUT NOT LIMITED TO, THE IMPLIED WARRANTIES OF NON-INFRINGEMENT, MERCHANTABILITY OR FITNESS FOR A PARTICULAR PURPOSE. Some jurisdictions do not allow disclaimer of express or implied warranties in certain transactions, therefore, this statement may not apply to you.

This information could include technical inaccuracies or typographical errors. Changes are periodically made to the information herein; these changes will be incorporated in new editions of the publication. Lenovo may make improvements and/or changes in the product(s) and/or the program(s) described in this publication at any time without notice.

The products described in this document are not intended for use in implantation or other life support applications where malfunction may result in injury or death to persons. The information contained in this document does not affect or change Lenovo product specifications or warranties. Nothing in this document shall operate as an express or implied license or indemnity under the intellectual property rights of Lenovo or third parties. All information contained in this document was obtained in specific environments and is presented as an illustration. The result obtained in other operating environments may vary. Lenovo may use or distribute any of the information you supply in any way it believes appropriate without incurring any obligation to you.

Any references in this publication to non-Lenovo Web sites are provided for convenience only and do not in any manner serve as an endorsement of those Web sites. The materials at those Web sites are not part of the materials for this Lenovo product, and use of those Web sites is at your own risk. Any performance data contained herein was determined in a controlled environment. Therefore, the result obtained in other operating environments may vary significantly. Some measurements may have been made on development-level systems and there is no guarantee that these measurements will be the same on generally available systems. Furthermore, some measurements may have been estimated through extrapolation. Actual results may vary. Users of this document should verify the applicable data for their specific environment.

© Copyright Lenovo 2023. All rights reserved.

This document, LP1054, was created or updated on May 23, 2023.

Send us your comments in one of the following ways:

- Use the online Contact us review form found at:
  https://lenovopress.lenovo.com/LP1054
- Send your comments in an e-mail to:
  comments@lenovopress.com

This document is available online at https://lenovopress.lenovo.com/LP1054.

Trademarks

Lenovo and the Lenovo logo are trademarks or registered trademarks of Lenovo in the United States, other countries, or both. A current list of Lenovo trademarks is available on the Web at https://www.lenovo.com/us/en/legal/copytrade/.

The following terms are trademarks of Lenovo in the United States, other countries, or both:
Lenovo®
AnyBay®
Bootable Media Creator
Flex System
Lenovo Services
RackSwitch
ServerProven®
System x®
ThinkServer®
ThinkSystem®
TruDDR4
UpdateXpress System Packs
XClarity®

The following terms are trademarks of other companies:

Intel®, Intel Optane™, and Xeon® are trademarks of Intel Corporation or its subsidiaries.

Linux® is the trademark of Linus Torvalds in the U.S. and other countries.

ActiveX®, Microsoft®, PowerShell, Windows PowerShell®, Windows Server®, and Windows® are trademarks of Microsoft Corporation in the United States, other countries, or both.

SPECpower® is a trademark of the Standard Performance Evaluation Corporation (SPEC).

Other company, product, or service names may be trademarks or service marks of others.