Lenovo ThinkSystem ST50 V2 Server
Product Guide

The Lenovo ThinkSystem ST50 V2 single-socket tower server is an entry level server ideal for small businesses, home offices, retail, educational institutions and branch offices. The server supports one Intel Xeon E-2300 Series processor (formerly codenamed "Rocket Lake") or Intel Pentium ("Comet Lake Refresh") and up to 128 GB of 3200 MHz TruDDR4 ECC memory.

The following figure shows the ThinkSystem ST50 V2.

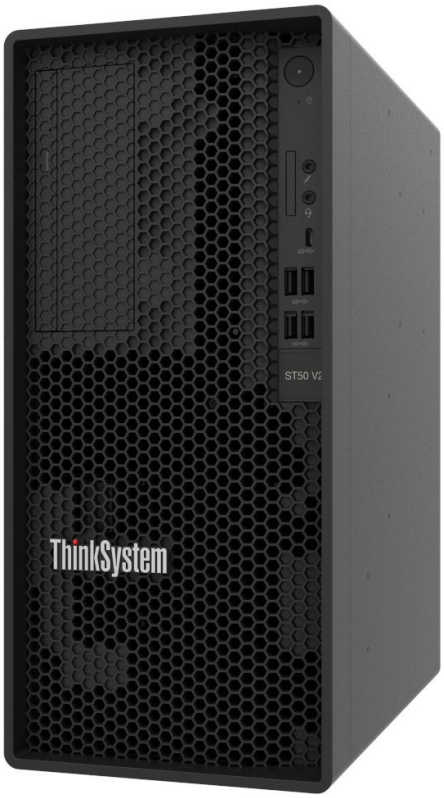

Figure 1. Lenovo ThinkSystem ST50 V2

Did you know?

The ThinkSystem ST50 V2 offers enterprise-class reliability features such as error correcting code (ECC) memory, the onboard RAID controller, and enterprise-class hard drives and network adapters at an affordable price. The server has Intel Active Management Technology (AMT) built-in, along with support for industry-standard management tools. The ST50 V2 runs a wide range of server operating systems and is quiet enough and small enough to fit under or beside an office desk.

Key features

The ThinkSystem ST50 V2 server is an office-friendly tower server that has been optimized to provide enterprise-class features to small businesses, retail, educational institutions and branch offices.

Scalability and performance

The ST50 V2 offers numerous features to boost performance, improve scalability, and reduce costs:

- Improved single-socket processor performance:
  - Intel Xeon E-2300 Series processors ("Rocket Lake-E") up to to 8 cores and core speeds up to 3.7 GHz
  - Intel Pentium G6405, G6505 and G6605 processors ("Comet Lake Refresh") with 2 cores and core speeds up to 4.3 GHz
- Up to four 3200 MHz DDR4 ECC UDIMMs provide speed and capacity of up to 128 GB
- Three PCIe slots for I/O expansion, one of which has the new PCIe Gen4 interface to maximize I/O performance.
- Support for a NVMe M.2 drive for OS boot operations
- Up to three non-hot-swap (NHS) drive bays, two 3.5-inch and one 2.5-inch, supporting hard disk drives (HDDs) or solid-state drives (SSDs) provide flexible internal storage capacity.
- The use of SSDs instead of, or along with, traditional spinning drives (HDDs) can significantly improve I/O performance.

Availability and serviceability

The ST50 V2 provides many features to simplify serviceability and increase system uptime:

- Designed to run 24 hours a day, 7 days a week
- The server supports UDIMM memory with ECC protection which provides error correction not available in PC-class "servers" that use parity memory. Avoiding system crashes (and data loss) due to soft memory errors means greater system uptime.
- Tool-less cover removal provides easy access to upgrades and serviceable parts, such as memory and adapter cards.
- A choice of affordable onboard SATA RAID or advanced hardware RAID redundancy offers data protection and greater system uptime.
- The use of SSDs can provide better reliability than the use of traditional HDDs, for greater uptime.
- Built-in Active Management Technology based on Intel Active Management Technology (AMT) 15.0 which continuously monitors system parameters, sends alerts, and enables administrators to perform remote recovery actions to minimize downtime.
- The Lenovo XClarity Provisioning Manager Lite tool can be used to install an operating system on the server and perform system diagnostics.
- One-year or three-year customer-replaceable unit (CRU) and onsite limited warranty with next business day response. Optional service upgrades are available.

Manageability and security

Powerful systems management features simplify local and remote management of the ST50 V2:

- Intel Active Management Technology (AMT) 15.0 monitors server availability and enables administrators to perform remote management.
- An integrated industry-standard Unified Extensible Firmware Interface (UEFI) enables improved setup, configuration, and updates, and simplifies error handling.
- An integrated hardware Trusted Platform Module (TPM) supporting TPM 2.0 enables advanced cryptographic functionality, such as digital signatures and remote attestation.
- Administrator and power-on passwords help protect from unauthorized access to the server.
- A padlock loop at the rear of the server plus an optional intrusion switch on the cover of the server help detect and prevent unauthorized physical access to the internal components of the server.
- A slot for a Kensington-style cable lock helps prevent theft.

Energy efficiency

The ST50 V2 offers the following energy saving features to save energy, reduce operational costs, increase energy availability, and contribute to a green environment:

- 80 PLUS Platinum-certified power supply (select models) enables greater energy savings while providing flexibility to meet your business needs.
- Intelligent Cooling Engine (ICE) actively monitors component temperatures in real-time and optimally adjusts the speeds of the fans to keep the system cooler and quieter.
- The ThinkSystem Capacity Planner tool provides information about the power consumption and electric current calculation for the different configurations of servers and other devices, which helps plan deployment of servers and devices in an efficient way.
- Intel Intelligent Power Capability powers individual processor elements on and off as needed, to reduce power draw.

Comparing the ST50 V2 to the ST50

The ThinkSystem ST50 V2 improves on the previous generation ST50, as summarized in the following table.

Table 1. Comparing the ST50 V2 to the ST50

Feature	ST50 V2	ST50	Benefits
Form Factor	• 1-Socket (1S) Entry Tower • 17 liter chassis	• 1-Socket (1S) Entry Tower • 25 liter chassis	• Smaller unit takes up less space
Processor	• Support single Xeon E2300 Series "Rocket Lake" processor up to 8C / 95W • Also supports Pentium processors • Intel C256 "Tiger Lake" Platform Controller Hub (PCH)	• Supports single Xeon E2200 Series "Coffee Lake-S" processor up to 6C / 95W • Also supports Pentium, Core i3 and Celeron processors • Uses Intel C246 "Cannon Lake" Platform Controller Hub (PCH)	• Supports the latest generation Intel Xeon E processors

Feature	ST50 V2	ST50	Benefits
GPU	• NVIDIA Quadro T1000 PCIe Active GPU	• NVIDIA Quadro P620 2GB PCIe Active GPU	• GPU for advanced graphics processing
Memory	• 4x UDIMM slots, up to 128GB, 3200MHz with Xeon E-2300 processors • TruDDR4 ECC memory	• 4x UDIMM slots, up to 64GB, 2666MHz • TruDDR4 ECC memory (in China, also support for non-ECC memory)	• Enterprise-grade memory sufficient for most SMB and retail applications
Storage	• Up to 3 bays • 2x 3.5” HDD or SSD, (1 standard, 1 optional); 1x2.5” SSD (optional) • 1x M.2 NVMe SSD (2280 form factor) • 1x slim SATA DVD-RW in dedicated bay (optional)	• Up to 4 bays • 4x 3.5” drive bays (includes one that can be shared with optical drive or used instead for RDX/tape drive) • 2x SD cards in SD Adapter module • 1x optical drive or RDX/tape drive bay	• Support for both HDDs for capacity and SSDs for performance • Optical drive support for ease of software installation • M.2 drive support to separate the OS from the applications and data
RAID	• Intel VROC 6.x SW RAID • HW RAID support (limited)	• Intel RSTe SW RAID • HW RAID support (limited)	• RAID capability maximizes reliability and uptime
Cooling	• 2x system fans (Front drive bay and rear), 1x CPU fan	• 2x system fans (Front drive bay and rear), 1x CPU fan	• Ensures all components are sufficiently cooled
Networking	• 1x 1GbE Embedded (Intel I219-LM)	• 1x 1GbE Embedded (Intel I219-LM)	• Easy built-in networking
Management	• Intel AMT 15 Management • TPM embedded: TPM 2.0 • Lenovo XClarity Provisioning Manager Lite (USB based)	• Intel AMT 12 Management • TPM embedded Optional : TPM 2.0 / TPM 1.2 • Lenovo XClarity Provisioning Manager Lite (USB based)	• Supports the latest embedded systems management tools from Intel and Lenovo • TPM 2.0 enables advanced cryptographic functionality, such as digital signatures and remote attestation • LXPM Lite provides easy system setup and firmware upgrades
PCIe Slots	• 3 PCIe slots (x16, x4, x1) • Includes a PCIe Gen4 x16 slot (requires Xeon E-2300 processor)	• 3 PCIe slots (x16, x4, x1) • Includes a PCIe Gen3 x16 slot	• Support the latest PCIe Gen4 slot technology • Support for a high-performance PCIe x16 adapter

Feature	ST50 V2	ST50	Benefits
Front I/O	• Power button & LED • Thermal sensor • 1x USB 3.2 G2 (10 Gbps) with USB-C connector • 2x USB 3.2 G1 (5 Gbps); 2x USB 3.2 G2 (10 Gbps) ports • 1x Microphone port, 1x Headset port	• Power button & LED • Thermal sensor • 2x USB 3.1 G1 (5 Gbps) ports	• Expansive USB support • Thermal sensor ensures the server does not overheat if the ambient temperature rises
Rear I/O	• 4x USB 3.2 G1 (5 Gbps) ports • 2x DP Ports • 1x Serial port • 1x 1GbE LAN • 1x Audio line out	• 2x USB 3.1 G1 (5 Gbps), 2x USB 2.0 ports • 2x DP Ports • 1x Serial port • 1x 1GbE LAN • 1x Audio line out	• Expansive USB support • Integrated Gigabit networking • Serial port for applications that require it
Power Supply	• 1x Fixed power supply • Choose from 300W Gold or 500W Platinum	• 1x Fixed power supply • Choose from 250W Platinum or 400W Platinum	• Select the power supply that best suits the configuration to maximize efficiency

Components and connectors

The following figure shows the front of the server.

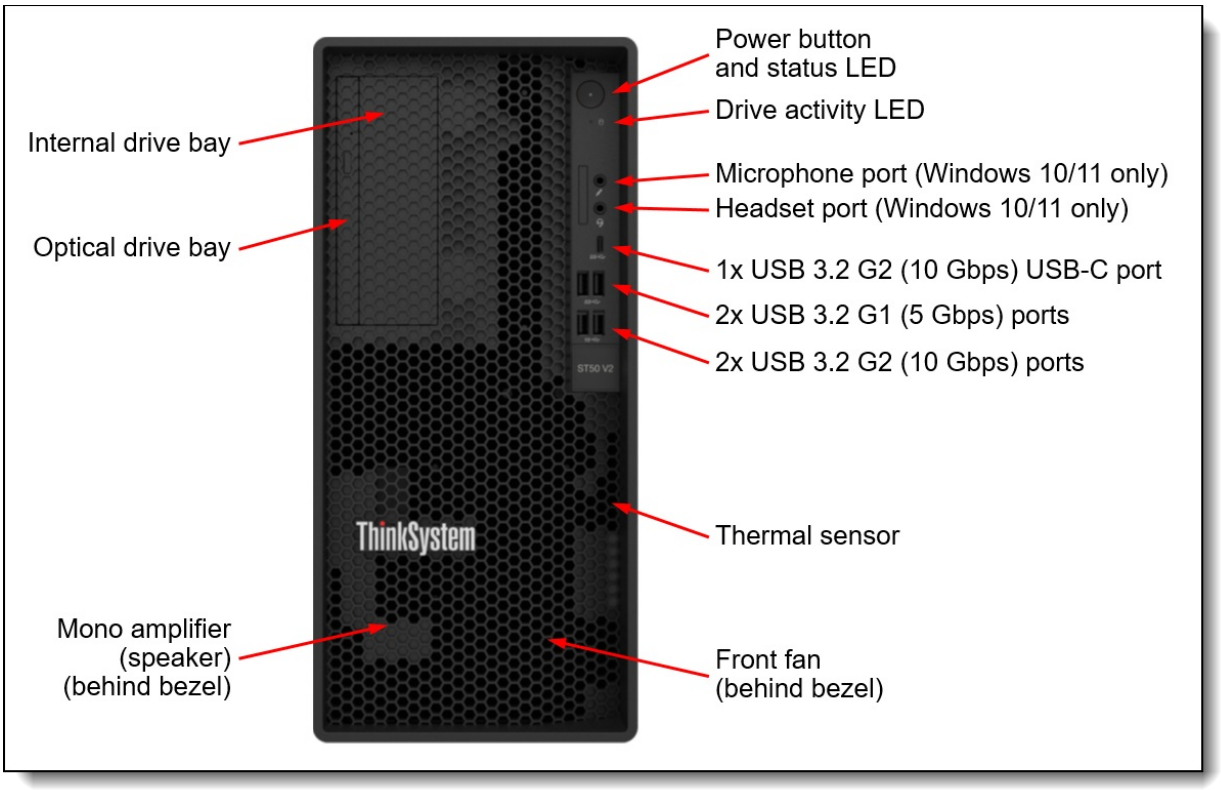

Figure 2. Front view of the ThinkSystem ST50 V2 server

The following figure shows the rear of the server.

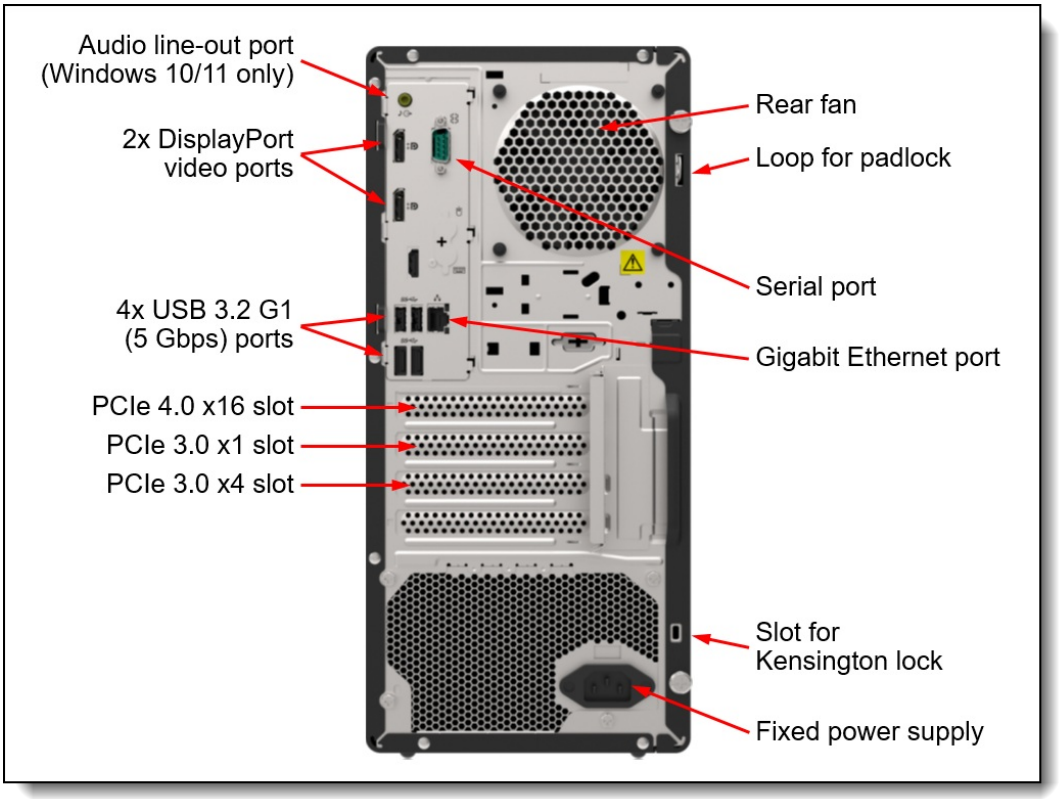

Figure 3. Rear view of the ThinkSystem ST50 V2 server

The following figure shows the locations of key components inside the server. The optical drive bay and drive bays 2 and 3 are removed to show the system board. To view the drive bays, see the Internal storage section.

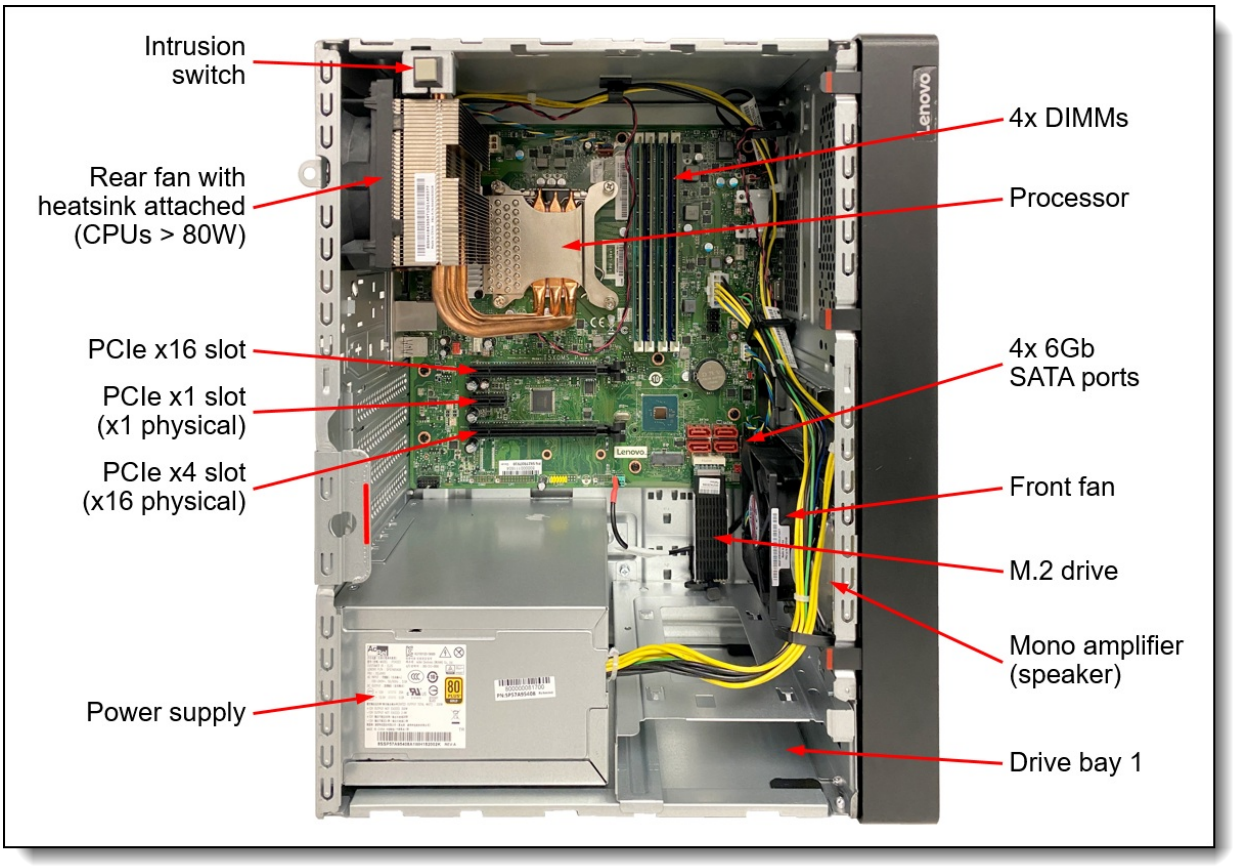

Figure 4. Internal view of the ThinkSystem ST50 V2 server

System architecture

The following figure shows the architectural block diagram of the ST50 V2, showing the major components and their connections.

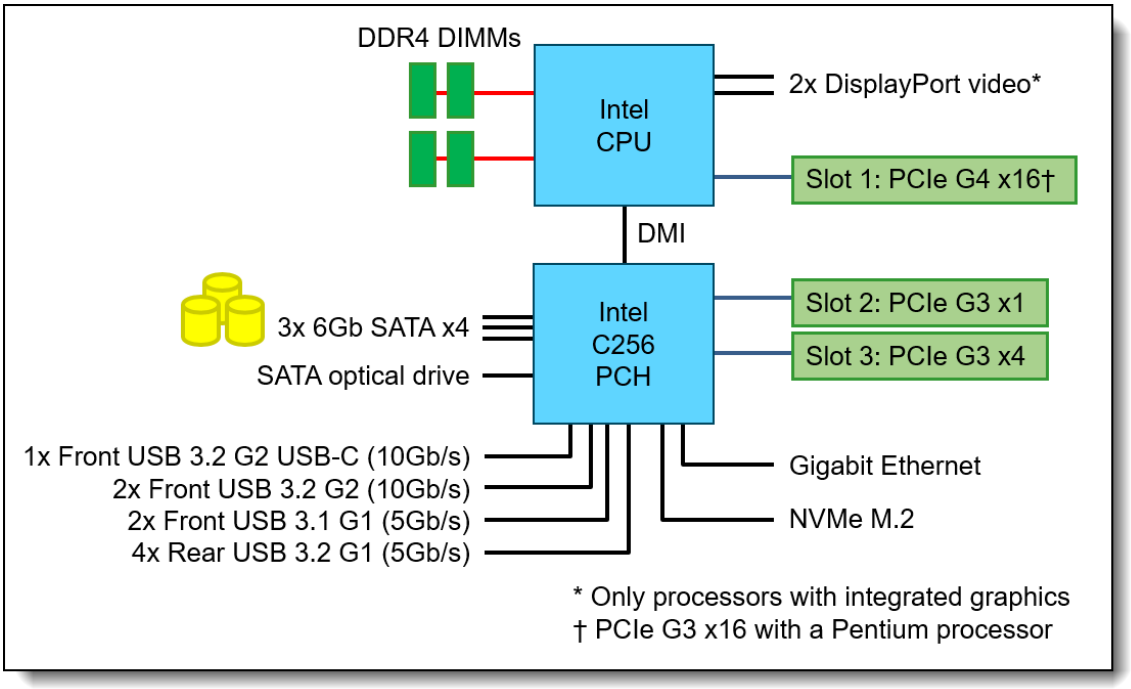

Figure 5. ST50 V2 system architectural block diagram

Standard specifications

The following table lists the standard specifications.

Table 2. Standard specifications

Components	Specification
Machine type	7D8K - 1 year warranty 7D8J - 3 year warranty
Form factor	Tower (can be installed in a rack with the available Rack Mount Kit)
Processor	One Intel processor. Choose from: • Intel Xeon E-2300 Series processors ("Rocket Lake-E") up to to 8 cores, with core speeds up to 3.7 GHz • Intel Pentium G6405, G6505 and G6605 processors ("Comet Lake Refresh") with 2 cores, with core speeds up to 4.3 GHz
Chipset	Intel C256 chipset ("Tiger Lake") part of the "Tatlow" platform
Memory	Four DIMM sockets supporting Lenovo TruDDR4 DIMMs at 3200 MHz (Xeon processors) or 2666 MHz (Pentium processors). Support ECC UDIMMs.
Memory maximums	Up to 128 GB using 4x 32 GB UDIMMs.
Memory protection	Error-correcting code (ECC)
Disk drive bays	Up to 3x non-hot swap (NHS) drive bays: • 2x 3.5-inch NHS drive bays supporting HDDs or SSDs • 1x 2.5-inch NHS drive bay supporting an SSD The server can be configured without any HDDs or SSDs. The server also supports 1x NVMe M.2 drive installed in a socket on the system board as a boot drive.

Maximum internal storage	• 3.5-inch drives:
	  ◦ 16TB using 2x 8TB 3.5-inch HDDs
	  ◦ 1.92TB using 2x 960GB 3.5-inch SATA SSDs
	• 2.5-inch drives:
	  ◦ 960GB using 1x 960GB 2.5-inch SATA SSDs
	HDDs and SSDs can be installed in the same server but are not supported in the same RAID volume

Storage controller	• Onboard 6 Gb SATA controller, supporting AHCI mode (non-RAID) or Intel RSTe software RAID (RAID 0, 1, 5) • RAID 5350-8i adapter • 4350-8i SAS/SATA 12Gb HBA
Optical drive	Optional slim DVD-RW drive in dedicated bay.
Network interfaces	One integrated Gigabit Ethernet 1000BASE-T port (RJ-45) using Intel I219-LM controller.

Components	Specification
PCI Expansion slots	Three PCIe slots as follows: • Slot 1: PCIe 4.0 x16 full-height half-length (FHHL) • Slot 2: PCIe 3.0 x1 FHHL • Slot 3: PCIe 3.0 x4 (physical connector is x16) FHHL With a Pentium processor, Slot 1 is PCIe 3.0.

Ports	Front ports:
	
	• Five USB ports
	  ◦ 1x USB 3.2 G2 with USB-C connector (10Gbps)
	  ◦ 2x USB 3.2 G2 (10Gbps)
	  ◦ 2x USB 3.2 G1 (5Gbps)
	• Microphone port*
	• Headset port*
	
	Rear ports:
	
	• Four USB ports (all USB 3.2 G1 (5Gbps)
	• Two DisplayPort video ports (require a processor with integrated graphics)
	• One RJ-45 Gigabit Ethernet port
	• One serial port
	• One audio line-out port*
	
	* Windows 10 and Windows 11 only; some line noise is possible

Audio	Mono amplifier (speaker) mounted on the inside of the front bezel; Audio line-out port at the rear of the server; microphone and headset ports at the front of the server
Cooling	Two fixed system fans. Additional fans attached to the processor and power supply. Supports ASHRAE A2 environments.
Power supply	One fixed power supply, either 300W (80 PLUS Gold) or 500W (80 PLUS Platinum) power supply.
Hot-swap parts	None
Systems management	Power and drive activity LEDs. Intel Active Management Technology (AMT) 15.0 server management. Supports Integrated Lenovo XClarity Provisioning Manager Lite (USB memory key-based) for system setup and firmware upgrades. No support for XClarity Controller (XCC).
Security features	Power-on password, administrator's password, Trusted Platform Module (TPM), supporting TPM 2.0. Optional Chassis intrusion switch. Padlock loop and Kensington cable slot for physical security.
Video	Integrated Intel Graphics Technology (Intel GT) on most processors - see the Processors section. Two DisplayPort ports. Maximum resolution is 3840 x 2160 pixels (4K) at a refresh rate of 60Hz. On servers with a processor that does not have integrated graphics, the two DP ports are not connected and a separate GPU adapter is required. See GPU adapters for details.
Operating systems supported	Microsoft Windows Server, Red Hat Enterprise Linux, VMware ESXi. See the Operating system support section for specifics.
Limited warranty	Three-year or one-year (model dependent) customer-replaceable unit and onsite limited warranty with 9x5 next business day (NBD).
Service and support	Optional service upgrades are available through Lenovo Services: 4-hour or 2-hour response time, 6-hour fix time, 1-year or 2-year warranty extension, software support for Lenovo hardware and some third-party applications.

Components	Specification
Dimensions	Width: 170 mm (6.7 in.), height: 376 mm (14.8 in.), depth: 316 mm (12.4 in.). SeePhysical and electrical specifications for details.
Weight	Maximum: 9.4 kg (20.7 lb)

The server is shipped with the following items:

- Documentation flyer
- Power cord (model and region dependent)

Models

ThinkSystem ST50 V2 models can be configured by using the Lenovo Data Center Solution Configurator (DCSC).

Configure-to-order (CTO) models are used to create models with factory-integrated server customizations. For CTO models, two base CTO models are available for the ST50 V2 as listed in the following table, CTO1WW and CTOLWW:

- The CTO1WW base CTO model is for general business and is selectable by choosing **General Purpose** mode in DCSC.
- The CTOLWW base model is intended for High Performance Computing (HPC) and Artificial Intelligence (AI) configurations and solutions, including configurations for Lenovo Scalable Infrastructure (LeSI), and is enabled using either the **HPC & AI LeSI Solutions** mode or **HPC & AI Hardware** mode in DCSC. CTOLWW configurations can also be built using System x and Cluster Solutions Configurator (x-config).

Preconfigured server models may also be available for the ST50 V2, however these are region-specific; that is, each region may define their own server models, and not all server models are available in every region.

The following table lists the base CTO models of the ThinkSystem ST50 V2 server.

Table 3. Base CTO models

Machine Type/Model General purpose	Machine Type/Model for HPC and AI	Description
7D8JCTO1WW	7D8JCTOLWW	ThinkSystem ST50 V2 – 3-year Warranty
7D8KCTO1WW	7D8KCTOLWW	ThinkSystem ST50 V2 – 1-year Warranty

The following tables list the available models, grouped by region.

- Models for Asia Pacific region
- Models for Australia and New Zealand
- Models for Brazil
- Models for EMEA region
- Models for Hong Kong, Taiwan, Korea (HTK)
- Models for India
- Models for Japan
- Models for Latin American countries (except Brazil)
- Models for USA and Canada

Refer to the Specifications section for information about standard features of the server.

Models for Asia Pacific region

The following table lists the models for the Asia Pacific region: Australia, Bangladesh, Brunei, Hong Kong, India, Japan, Korea, Sri Lanka, Malaysia, New Zealand, Philippines, Singapore, Thailand, Taiwan, Vietnam

Table 4. Models for Asia Pacific markets

Model	Intel processors†	Memory	Drive Contr	Drive bays (max 3); Drives	DVD	Cards	GPU	Power supply & cord	Rear fan	Video port kit	Intru sw.
Standard models with a 3-year warranty (machine type 7D8J)											
7D8JA00WAP	Xeon E-2324G 4C 65W 3.1G	1x 8GB	SATA	1x3.5" bay; Open bay	DVD-RW	Opt	Opt	500W 92% / No	Opt	Opt	Opt
7D8JA00UAP	Xeon E-2356G 6C 80W 3.2G	1x 8GB	SATA	1x3.5" bay; Open bay	DVD-RW	Opt	Opt	500W 92% / No	Opt	Opt	Opt
7D8JA00TAP	Xeon E-2386G 6C 95W 3.5G	1x 8GB	SATA	1x3.5" bay; Open bay	DVD-RW	Opt	Opt	500W 92% / No	Opt	Opt	Opt

† Processor description: Processor model, number of cores, thermal design power (TDP), core frequency

Models for Australia and New Zealand

AP models: Customers in Australia and New Zealand also have access to the Asia Pacific region models.

Table 5. Models for Australia and New Zealand

Model	Intel processors†	Memory	Drive Contr	Drive bays (max 3); Drives	DVD	Cards	GPU	Power supply & cord	Rear fan	Video port kit	Intru sw.
TopSeller models with a 3-year warranty (machine type 7D8J)											
7D8JA00LAU	Xeon E-2324G 4C 65W 3.1G	1x 8GB	SATA	2x3.5"+ 1x2.5" bays; Open bay	Opt	Opt	No	300W / Yes	Yes	Opt	Yes
7D8JA00KAU	Xeon E-2356G 6C 80W 3.2G	1x 16GB	SATA	2x3.5"+ 1x2.5" bays; Open bay	Opt	Opt	No	300W / Yes	Yes	Opt	Yes
7D8JA00CAU	Xeon E-2378G 8C 80W 2.8G	1x 16GB	SATA	2x3.5"+ 1x2.5" bays; Open bay	Opt	Opt	Opt	500W 92% / Yes	Yes	Opt	Yes

† Processor description: Processor model, number of cores, thermal design power (TDP), core frequency

Models for Brazil

Table 6. Models for Brazil

Model	Intel processors†	Memory	Drive Contr	Drive bays (max 3); Drives	DVD	Cards	GPU	Power supply & cord	Rear fan	Video port kit	Intru sw.
Standard models with a 3-year warranty (machine type 7D8J)											
7D8J1003BR	Xeon E-2324G 4C 65W 3.1G	1x 16GB	SATA	1x3.5" bay; 1x 2TB HDD	Opt	1x 2x1Gb 5720	Opt	500W 92% / Yes	Opt	Opt	Opt
7D8J1004BR	Xeon E-2324G 4C 65W 3.1G	1x 16GB	SATA	1x3.5" bay; 1x 4TB HDD	Opt	Opt	Opt	500W 92% / Yes	Opt	Opt	Opt
TopSeller models with a 3-year warranty (machine type 7D8J)											
7D8JA02DBR	Xeon E-2324G 4C 65W 3.1G	1x 16GB	SATA	2x3.5" bays; 1x 4TB HDD	Opt	Opt	Opt	500W 92% / No	Yes	Opt	Opt
7D8JA02MBR	Xeon E-2324G 4C 65W 3.1G	1x 16GB	SATA	2x3.5" bays; 1x 2TB HDD	Opt	Opt	Opt	500W 92% / Yes	Yes	Opt	Opt
7D8JA034BR	Xeon E-2324G 4C 65W 3.1G	1x 16GB	SATA	2x3.5" bays; 1x 2TB HDD	Opt	Opt	Opt	500W 92% / Yes	Yes	Opt	Opt
7D8JA04BBR	Xeon E-2324G 4C 65W 3.1G	1x 16GB	SATA	2x3.5" bays; 1x 2TB HDD	Opt	Opt	Opt	500W 92% / Yes	Yes	Option	Opt

† Processor description: Processor model, number of cores, thermal design power (TDP), core frequency

Models for EMEA region

Table 7. Models for EMEA region

Model	Intel processors†	Memory	Drive Contr	Drive bays (max 3); Drives	DVD	Cards	GPU	Power supply & cord	Rear fan	Video port kit	Intru sw.
Standard models with a 1-year warranty (machine type 7D8K)											
7D8KA00JEA	Xeon E-2324G 4C 65W 3.1G	1x 8GB	SATA	2x3.5"+ 1x2.5" bays; Open bay	Opt	Opt	Opt	500W 94% / No	Yes	1x VGA	Yes
Standard models with a 3-year warranty (machine type 7D8J)											
7D8J1009EA	Xeon E-2324G 4C 65W 3.1G	1x 8GB	SATA	1x3.5" bay; 1x 1TB Client HDD	Opt	Opt	Opt	500W 92% / Yes	Opt	1x VGA	Yes
7D8J100CEA	Xeon E-2324G 4C 65W 3.1G	1x 8GB	SATA	1x3.5" bay; 1x 1TB HDD	Opt	Opt	Opt	500W 92% / Yes	Opt	1x VGA	Yes
7D8J100EEA	Xeon E-2324G 4C 65W 3.1G	1x 16GB	SATA	2x3.5" bays; 2x 480GB 5400 PRO	Opt	Opt	Opt	500W 94% / Yes	Yes	1x VGA	Yes
7D8J100GEA	Xeon E-2324G 4C 65W 3.1G	1x 16GB	SATA	2x3.5" bays; 2x 960GB 5400 PRO	Opt	Opt	Opt	500W 92% / Yes	Yes	1x VGA	Yes
7D8JA007EA	Xeon E-2324G 4C 65W 3.1G	1x 16GB	SATA	2x3.5"+ 1x2.5" bays; 2x 2TB HDD	Opt	Opt	Opt	500W 92% / Yes	Yes	1x VGA	Opt

Model	Intel processors†	Memory	Drive Contr	Drive bays (max 3); Drives	DVD	Cards	GPU	Power supply & cord	Rear fan	Video port kit	Intru sw.
7D8JA00AEA	Xeon E-2324G 4C 65W 3.1G	1x 8GB	SATA	2x3.5" bays; 2x 1TB Client HDD	DVD-RW	Opt	Opt	500W 92% / Yes	Yes	1x VGA	Opt
7D8JA00BEA	Xeon E-2324G 4C 65W 3.1G	1x 16GB	SATA	2x3.5"+ 1x2.5" bays; 2x 2TB HDD	DVD-RW	Opt	Opt	500W 92% / Yes	Yes	1x VGA	Opt
7D8JA00DEA	Xeon E-2324G 4C 65W 3.1G	1x 16GB	SATA	2x3.5" bays; 2x 2TB Client HDD	DVD-RW	Opt	Opt	500W 92% / Yes	Yes	1x VGA	Opt
7D8JA00HEA	Xeon E-2324G 4C 65W 3.1G	1x 8GB	SATA	2x3.5"+ 1x2.5" bays; 2x 1TB HDD	DVD-RW	Opt	Opt	500W 92% / Yes	Yes	1x VGA	Opt
7D8JA00NEA	Xeon E-2324G 4C 65W 3.1G	1x 8GB	SATA	2x3.5"+ 1x2.5" bays; 2x 2TB HDD	Opt	Opt	Opt	500W 92% / Yes	Yes	1x VGA	Opt
7D8JA00PEA	Xeon E-2324G 4C 65W 3.1G	1x 8GB	SATA	2x3.5"+ 1x2.5" bays; 2x 1TB HDD	Opt	Opt	Opt	500W 92% / Yes	Yes	1x VGA	Opt
7D8JA00QEA	Xeon E-2324G 4C 65W 3.1G	1x 8GB	SATA	2x3.5" bays; 2x 1TB Client HDD	Opt	Opt	Opt	500W 92% / Yes	Yes	1x VGA	Opt
7D8JA00SEA	Xeon E-2324G 4C 65W 3.1G	1x 16GB	SATA	2x3.5"+ 1x2.5" bays; 2x 1TB HDD	Opt	Opt	Opt	500W 92% / Yes	Yes	1x VGA	Opt
7D8JA02CEA	Xeon E-2324G 4C 65W 3.1G	1x 8GB	5350-8i	2x3.5"+ 1x2.5" bays; 1x 1TB HDD	DVD-RW	Opt	Opt	500W 92% / Yes	Yes	1x VGA	Yes
7D8JA02KEA	Xeon E-2324G 4C 65W 3.1G	1x 16GB	SATA	2x3.5"+ 1x2.5" bays; 1x 2TB HDD	Opt	Opt	Opt	500W 92% / Yes	Yes	1x VGA	Opt
7D8JA02YEA	Xeon E-2324G 4C 65W 3.1G	1x 8GB	SATA	2x3.5" bays; 1x 2TB HDD	Opt	Opt	Opt	500W 94% / Yes	Yes	1x VGA	Yes
7D8JA02ZEA	Xeon E-2324G 4C 65W 3.1G	1x 8GB	SATA	2x3.5" bays; 2x 2TB Client HDD	Opt	Opt	Opt	500W 94% / Yes	Yes	1x VGA	Yes
7D8JA032EA	Xeon E-2324G 4C 65W 3.1G	1x 8GB	SATA	2x3.5" bays; Open bay	Opt	Opt	Opt	500W 94% / Yes	Yes	1x VGA	Yes
7D8JA033EA	Xeon E-2324G 4C 65W 3.1G	1x 8GB	SATA	2x3.5" bays; 1x 1TB HDD	Opt	Opt	Opt	500W 94% / Yes	Yes	1x VGA	Yes
7D8JA03EEA	Xeon E-2324G 4C 65W 3.1G	1x 8GB	SATA	2x3.5" bays; 2x 480GB 5400 PRO	Opt	Opt	Opt	500W 94% / Yes	Yes	1x VGA	Yes
7D8JA03GEA	Xeon E-2324G 4C 65W 3.1G	1x 8GB	SATA	2x3.5" bays; 1x 480GB 5400 PRO	Opt	Opt	Opt	500W 94% / Yes	Yes	1x VGA	Yes
7D8JA043EA	Xeon E-2324G 4C 65W 3.1G	1x 16GB	SATA	2x3.5" bays; 2x 960GB 5400 PRO	Opt	Opt	Opt	500W 94% / Yes	Yes	1x VGA	Yes
7D8JA044EA	Xeon E-2324G 4C 65W 3.1G	1x 16GB	SATA	2x3.5"+ 1x2.5" bays; Open bay	Opt	Opt	Opt	500W 94% / Yes	Yes	1x VGA	Yes

Model	Intel processors†	Memory	Drive Contr	Drive bays (max 3); Drives	DVD	Cards	GPU	Power supply & cord	Rear fan	Video port kit	Intru sw.
7D8JA045EA	Xeon E-2324G 4C 65W 3.1G	1x 16GB	SATA	2x3.5" bays; 2x 1TB HDD	Opt	Opt	Opt	500W 94% / Yes	Yes	1x VGA	Yes
7D8JA046EA	Xeon E-2324G 4C 65W 3.1G	1x 16GB	SATA	2x3.5" bays; 1x 2TB HDD	Opt	Opt	Opt	500W 94% / Yes	Yes	1x VGA	Yes
7D8JA047EA	Xeon E-2324G 4C 65W 3.1G	1x 16GB	SATA	2x3.5" bays; 2x 2TB HDD	Opt	Opt	Opt	500W 94% / Yes	Yes	1x VGA	Yes
7D8JA048EA	Xeon E-2324G 4C 65W 3.1G	1x 16GB	SATA	2x3.5" bays; 2x 3.5" 480GB S4520	Opt	Opt	Opt	500W 94% / Yes	Yes	1x VGA	Yes
7D8JA049EA	Xeon E-2324G 4C 65W 3.1G	1x 16GB	SATA	2x3.5" bays; 2x 3.5" 960GB S4520	Opt	Opt	Opt	500W 94% / Yes	Yes	1x VGA	Yes
7D8JA04AEA	Xeon E-2324G 4C 65W 3.1G	1x 16GB	SATA	2x3.5" bays; 1x 1TB HDD	Opt	Opt	Opt	500W 94% / Yes	Yes	1x VGA	Yes
7D8JA00FEA	Xeon E-2356G 6C 80W 3.2G	1x 16GB	SATA	2x3.5"+ 1x2.5" bays; 2x 2TB HDD	DVD-RW	Opt	Opt	500W 92% / Yes	Yes	1x VGA	Opt
7D8JA00MEA	Xeon E-2356G 6C 80W 3.2G	1x 16GB	SATA	2x3.5"+ 1x2.5" bays; 2x 2TB HDD	Opt	Opt	Opt	500W 92% / Yes	Yes	1x VGA	Opt
7D8JA00REA	Xeon E-2356G 6C 80W 3.2G	1x 8GB	SATA	2x3.5"+ 1x2.5" bays; 2x 2TB HDD	Opt	Opt	Opt	500W 92% / Yes	Yes	1x VGA	Opt
7D8JA026EA	Xeon E-2356G 6C 80W 3.2G	1x 8GB	SATA	2x3.5"+ 1x2.5" bays; Open bay	DVD-RW	Opt	Opt	500W 92% / Yes	Yes	1x VGA	Yes
7D8JA027EA	Xeon E-2356G 6C 80W 3.2G	1x 8GB	SATA	2x3.5"+ 1x2.5" bays; 1x 1TB HDD	DVD-RW	Opt	Opt	500W 92% / Yes	Yes	1x VGA	Yes
7D8JA028EA	Xeon E-2356G 6C 80W 3.2G	1x 8GB	SATA	2x3.5"+ 1x2.5" bays; 1x 2TB HDD	DVD-RW	Opt	Opt	500W 92% / Yes	Yes	1x VGA	Yes
7D8JA029EA	Xeon E-2356G 6C 80W 3.2G	1x 8GB	SATA	2x3.5"+ 1x2.5" bays; 1x 2TB HDD	Opt	Opt	Opt	500W 92% / Yes	Yes	1x VGA	Yes
7D8JA02AEA	Xeon E-2356G 6C 80W 3.2G	1x 8GB	SATA	2x3.5"+ 1x2.5" bays; 1x 1TB HDD	Opt	Opt	Opt	500W 92% / Yes	Yes	1x VGA	Yes
7D8JA02BEA	Xeon E-2356G 6C 80W 3.2G	1x 8GB	SATA	2x3.5"+ 1x2.5" bays; Open bay	Opt	Opt	Opt	500W 92% / Yes	Yes	1x VGA	Yes
7D8JA02LEA	Xeon E-2356G 6C 80W 3.2G	1x 16GB	SATA	2x3.5"+ 1x2.5" bays; 1x 2TB HDD	Opt	Opt	Opt	500W 92% / Yes	Yes	1x VGA	Opt
7D8JA02TEA	Xeon E-2356G 6C 80W 3.2G	1x 16GB	SATA	2x3.5" bays; 1x 1TB HDD	DVD-RW	Opt	Opt	500W 94% / Yes	Yes	1x VGA	Yes
7D8JA02UEA	Xeon E-2356G 6C 80W 3.2G	1x 16GB	SATA	2x3.5" bays; Open bay	DVD-RW	Opt	Opt	500W 94% / Yes	Yes	1x VGA	Yes

Model	Intel processors†	Memory	Drive Contr	Drive bays (max 3); Drives	DVD	Cards	GPU	Power supply & cord	Rear fan	Video port kit	Intru sw.
7D8JA02VEA	Xeon E-2356G 6C 80W 3.2G	1x 16GB	SATA	2x3.5" bays; 1x 2TB HDD	DVD-RW	Opt	Opt	500W 94% / Yes	Yes	1x VGA	Yes
7D8JA02WEA	Xeon E-2356G 6C 80W 3.2G	1x 16GB	SATA	2x3.5" bays; 1x 1TB HDD	Opt	Opt	Opt	500W 94% / Yes	Yes	1x VGA	Yes
7D8JA02XEA	Xeon E-2356G 6C 80W 3.2G	1x 16GB	SATA	2x3.5" bays; 2x 2TB Client HDD	Opt	Opt	Opt	500W 94% / Yes	Yes	1x VGA	Yes
7D8JA030EA	Xeon E-2356G 6C 80W 3.2G	1x 16GB	SATA	2x3.5" bays; 2x 2TB Client HDD	DVD-RW	Opt	Opt	500W 94% / Yes	Yes	1x VGA	Yes
7D8JA031EA	Xeon E-2356G 6C 80W 3.2G	1x 16GB	SATA	2x3.5" bays; 1x 2TB HDD	Opt	Opt	Opt	500W 94% / Yes	Yes	1x VGA	Yes
7D8JA035EA	Xeon E-2356G 6C 80W 3.2G	1x 16GB	SATA	2x3.5" bays; Open bay	Opt	Opt	Opt	500W 94% / Yes	Yes	1x VGA	Yes
7D8JA037EA	Xeon E-2356G 6C 80W 3.2G	1x 16GB	SATA	2x3.5" bays; 2x 480GB 5400 PRO	DVD-RW	Opt	Opt	500W 94% / Yes	Yes	1x VGA	Yes
7D8JA038EA	Xeon E-2356G 6C 80W 3.2G	1x 16GB	SATA	2x3.5" bays; 1x 480GB 5400 PRO	DVD-RW	Opt	Opt	500W 94% / Yes	Yes	1x VGA	Yes
7D8JA03CEA	Xeon E-2356G 6C 80W 3.2G	1x 16GB	SATA	2x3.5" bays; 1x 480GB 5400 PRO	Opt	Opt	Opt	500W 94% / Yes	Yes	1x VGA	Yes
7D8JA03FEA	Xeon E-2356G 6C 80W 3.2G	1x 16GB	SATA	2x3.5" bays; 2x 480GB 5400 PRO	Opt	Opt	Opt	500W 94% / Yes	Yes	1x VGA	Yes
7D8JA02QEA	Xeon E-2378G 8C 80W 2.8G	1x 32GB	SATA	2x3.5" bays; Open bay	Opt	Opt	Opt	500W 94% / Yes	Yes	1x VGA	Yes
7D8JA02SEA	Xeon E-2378G 8C 80W 2.8G	1x 16GB	SATA	2x3.5" bays; Open bay	Opt	Opt	Opt	500W 94% / Yes	Yes	1x VGA	Yes
7D8JA036EA	Xeon E-2378G 8C 80W 2.8G	1x 16GB	SATA	2x3.5" bays; 2x 480GB 5400 PRO	Opt	Opt	Opt	500W 94% / Yes	Yes	1x VGA	Yes
7D8JA03BEA	Xeon E-2378G 8C 80W 2.8G	1x 32GB	SATA	2x3.5" bays; 2x 960GB 5400 PRO	Opt	Opt	Opt	500W 94% / Yes	Yes	1x VGA	Yes
7D8JA03DEA	Xeon E-2378G 8C 80W 2.8G	1x 32GB	SATA	2x3.5" bays; 2x 480GB 5400 PRO	Opt	Opt	Opt	500W 94% / Yes	Yes	1x VGA	Yes
7D8JA03HEA	Xeon E-2378G 8C 80W 2.8G	1x 16GB	SATA	2x3.5" bays; 2x 960GB 5400 PRO	Opt	Opt	Opt	500W 94% / Yes	Yes	1x VGA	Yes
7D8JA02REA	Xeon E-2388G 8C 95W 3.2G	1x 32GB	SATA	2x3.5" bays; Open bay	Opt	Opt	Opt	500W 94% / Yes	Opt	1x VGA	Yes
7D8JA039EA	Xeon E-2388G 8C 95W 3.2G	1x 32GB	SATA	2x3.5" bays; 2x 960GB 5400 PRO	Opt	Opt	Opt	500W 94% / Yes	Opt	1x VGA	Yes

Model	Intel processors†	Memory	Drive Contr	Drive bays (max 3); Drives	DVD	Cards	GPU	Power supply & cord	Rear fan	Video port kit	Intru sw.
7D8JA03AEA	Xeon E-2388G 8C 95W 3.2G	1x 32GB	SATA	2x3.5" bays; 2x 480GB 5400 PRO	Opt	Opt	Opt	500W 94% / Yes	Opt	1x VGA	Yes
7D8JA020EA	Pentium G6505 2C 58W 4.2G	1x 8GB	SATA	2x3.5"+ 1x2.5" bays; Open bay	Opt	Opt	Opt	500W 92% / Yes	Yes	1x VGA	Yes
7D8JA021EA	Pentium G6505 2C 58W 4.2G	1x 8GB	SATA	2x3.5"+ 1x2.5" bays; 1x 1TB HDD	Opt	Opt	Opt	500W 92% / Yes	Yes	1x VGA	Yes
7D8JA022EA	Pentium G6505 2C 58W 4.2G	1x 8GB	SATA	2x3.5"+ 1x2.5" bays; 1x 2TB HDD	Opt	Opt	Opt	500W 92% / Yes	Yes	1x VGA	Yes
7D8JA023EA	Pentium G6505 2C 58W 4.2G	1x 8GB	SATA	2x3.5"+ 1x2.5" bays; 1x 2TB HDD	DVD-RW	Opt	Opt	500W 92% / Yes	Yes	1x VGA	Yes
7D8JA024EA	Pentium G6505 2C 58W 4.2G	1x 8GB	SATA	2x3.5"+ 1x2.5" bays; 1x 1TB HDD	DVD-RW	Opt	Opt	500W 92% / Yes	Yes	1x VGA	Yes
7D8JA025EA	Pentium G6505 2C 58W 4.2G	1x 8GB	SATA	2x3.5"+ 1x2.5" bays; Open bay	DVD-RW	Opt	Opt	500W 92% / Yes	Yes	1x VGA	Yes

† Processor description: Processor model, number of cores, thermal design power (TDP), core frequency

Models for Hong Kong, Taiwan, Korea (HTK)

AP models: Customers in Hong Kong, Taiwan, and Korea also have access to the Asia Pacific region models.

Table 8. Models for Hong Kong, Taiwan, Korea (HTK)

Model	Intel processors†	Memory	Drive Contr	Drive bays (max 3); Drives	DVD	Cards	GPU	Power supply & cord	Rear fan	Video port kit	Intru sw.
Standard models with a 3-year warranty (machine type 7D8J)											
7D8JA03XCN	Xeon E-2314 4C 65W 2.8G	1x 16GB	SATA	2x3.5" bays; Open bay	Opt	Opt	T1000	300W / No	Yes	No	Opt

† Processor description: Processor model, number of cores, thermal design power (TDP), core frequency

Models for India

AP models: Customers in India also have access to the Asia Pacific region models.

Table 9. Models for India

Model	Intel processors†	Memory	Drive Contr	Drive bays (max 3); Drives	DVD	Cards	GPU	Power supply & cord	Rear fan	Video port kit	Intru sw.
TopSeller models with a 3-year warranty (machine type 7D8J)											
7D8JA014SG	Xeon E-2324G 4C 65W 3.1G	1x16GB	SATA	2x3.5" bays; 1x 2TB HDD	Opt	Opt	No	300W / No	Yes	Opt	Yes
7D8JA015SG	Xeon E-2324G 4C 65W 3.1G	1x16GB	SATA	2x3.5"+ 1x2.5" bays; 1x 2TB HDD	Opt	Opt	No	300W / No	Yes	Opt	Yes
7D8JA017SG	Xeon E-2324G 4C 65W 3.1G	1x16GB	SATA	2x3.5"+ 1x2.5" bays; 1x 2TB HDD	Opt	Opt	Opt	500W 92% / No	Yes	Opt	Yes
7D8JA018SG	Xeon E-2324G 4C 65W 3.1G	1x8GB	SATA	2x3.5" bays; 1x 2TB HDD	Opt	Opt	No	300W / No	Yes	Opt	Yes
7D8JA019SG	Xeon E-2324G 4C 65W 3.1G	1x8GB	SATA	2x3.5" bays; 1x 1TB HDD	Opt	Opt	No	300W / No	Yes	Opt	Yes
7D8JA01ASG	Xeon E-2324G 4C 65W 3.1G	1x8GB	SATA	2x3.5"+ 1x2.5" bays; 1x 2TB HDD	Opt	Opt	No	300W / No	Yes	Opt	Yes
7D8JA01DSG	Xeon E-2324G 4C 65W 3.1G	1x8GB	SATA	2x3.5"+ 1x2.5" bays; 1x 1TB HDD	Opt	Opt	No	300W / No	Yes	Opt	Yes
7D8JA013SG	Xeon E-2356G 6C 80W 3.2G	1x8GB	SATA	2x3.5" bays; 1x 1TB HDD	Opt	Opt	No	300W / No	Yes	Opt	Yes
7D8JA016SG	Xeon E-2356G 6C 80W 3.2G	1x8GB	SATA	2x3.5"+ 1x2.5" bays; 1x 1TB HDD	Opt	Opt	No	300W / No	Yes	Opt	Yes
7D8JA01BSG	Xeon E-2356G 6C 80W 3.2G	1x8GB	SATA	2x3.5"+ 1x2.5" bays; 1x 2TB HDD	Opt	Opt	No	300W / No	Yes	Opt	Yes
7D8JA01CSG	Xeon E-2356G 6C 80W 3.2G	1x16GB	SATA	2x3.5"+ 1x2.5" bays; 1x 2TB HDD	Opt	Opt	Opt	500W 92% / No	Yes	Opt	Yes

† Processor description: Processor model, number of cores, thermal design power (TDP), core frequency

Models for Japan

AP models: Customers in Japan also have access to the Asia Pacific region models.

Table 10. Models for Japan

Model	Intel processors†	Memory	Drive Contr	Drive bays (max 3); Drives	DVD	Cards	GPU	Power supply & cord	Rear fan	Video port kit	Intru sw.
Standard models with a 1-year warranty (machine type 7D8K)											
7D8K1005JP	Xeon E-2324G 4C 65W 3.1G	1x 16GB	SATA	2x3.5" bays; 2x 1TB HDD	DVD-RW	Opt	No	300W / Yes	Yes	1x VGA	Opt
7D8K1006JP	Xeon E-2324G 4C 65W 3.1G	1x 16GB	SATA	2x3.5" bays; 2x 2TB HDD	DVD-RW	Opt	No	300W / Yes	Yes	1x VGA	Opt
7D8K1007JP	Xeon E-2324G 4C 65W 3.1G	1x 16GB	SATA	2x3.5" bays; 2x 960GB 5400 PRO	DVD-RW	Opt	No	300W / Yes	Yes	1x VGA	Opt
7D8KA008JP	Xeon E-2324G 4C 65W 3.1G	1x 16GB	SATA	2x3.5" bays; Open bay	DVD-RW	Opt	No	300W / Yes	Yes	1x VGA	Opt
7D8KA006JP	Xeon E-2356G 6C 80W 3.2G	1x 16GB	SATA	2x3.5" bays; Open bay	DVD-RW	Opt	No	300W / Yes	Yes	1x VGA	Opt
7D8KA007JP	Xeon E-2374G 4C 80W 3.7G	1x 16GB	SATA	2x3.5" bays; Open bay	DVD-RW	Opt	Opt	500W 92% / Yes	Yes	1x VGA	Opt
7D8KA004JP	Xeon E-2386G 6C 95W 3.5G	1x 16GB	SATA	2x3.5" bays; Open bay	DVD-RW	Opt	Opt	500W 92% / Yes	Opt	1x VGA	Opt
7D8KA005JP	Xeon E-2388G 8C 95W 3.2G	1x 16GB	SATA	2x3.5" bays; Open bay	DVD-RW	Opt	Opt	500W 92% / Yes	Opt	1x VGA	Opt

† Processor description: Processor model, number of cores, thermal design power (TDP), core frequency

Models for Latin American countries (except Brazil)

Table 11. Models with a 3-year warranty for Latin American countries (except Brazil)

Model	Intel processors†	Memory	Drive Contr	Drive bays (max 3); Drives	DVD	Cards	GPU	Power supply & cord	Rear fan	Video port kit	Intru sw.
Standard models with a 3-year warranty (machine type 7D8J)											
7D8J1002LA	Xeon E-2324G 4C 65W 3.1G	1x 16GB	SATA	1x3.5" + 1x2.5" bays; 1x 2TB HDD	Opt	1x 2x1Gb 5720	Opt	500W 92% / Yes	Opt	1x HDMI	Opt
7D8JA01FLA	Xeon E-2324G 4C 65W 3.1G	1x 16GB	SATA	2x3.5"+ 1x2.5" bays; 1x 4TB HDD	Opt	Opt	Opt	500W 92% / Yes	Yes	1x HDMI	Opt
7D8JA01KLA	Xeon E-2324G 4C 65W 3.1G	1x 16GB	SATA	2x3.5"+ 1x2.5" bays; 1x 4TB HDD	Opt	Opt	T1000	500W 92% / Yes	Yes	Opt	Opt
7D8JA02ELA	Xeon E-2324G 4C 65W 3.1G	2x 16GB	5350-8i	2x3.5" bays; 2x 3.5" 960GB S4520	Opt	1x 2x1Gb 5720	No	300W / Yes	Yes	1x VGA	Opt
7D8J1006LA	Xeon E-2356G 6C 80W 3.2G	1x 16GB	SATA	2x3.5"+ 1x2.5" bays; 2x 2TB HDD	Opt	1x 2x1Gb 5720	T1000	500W 92% / Yes	Yes	Opt	Opt

Model	Intel processors†	Memory	Drive Contr	Drive bays (max 3); Drives	DVD	Cards	GPU	Power supply & cord	Rear fan	Video port kit	Intru sw.
7D8J1007LA	Xeon E-2356G 6C 80W 3.2G	1x 16GB	SATA	2x3.5"+ 1x2.5" bays; 2x 2TB HDD	Opt	1x 2x1Gb 5720	Opt	500W 92% / Yes	Yes	Opt	Opt
7D8J1008LA	Xeon E-2356G 6C 80W 3.2G	1x 16GB	SATA	2x3.5"+ 1x2.5" bays; 2x 2TB HDD	Opt	1x 2x1Gb 5720	Opt	500W 92% / Yes	Yes	1x HDMI	Opt
7D8JA01ELA	Xeon E-2356G 6C 80W 3.2G	1x 16GB	SATA	2x3.5"+ 1x2.5" bays; 1x 4TB HDD	Opt	Opt	Opt	500W 92% / Yes	Yes	1x HDMI	Opt
7D8JA01HLA	Xeon E-2356G 6C 80W 3.2G	1x 16GB	SATA	2x3.5"+ 1x2.5" bays; 1x 4TB HDD	Opt	Opt	T1000	500W 92% / Yes	Yes	Opt	Opt
7D8JA04ELA	Xeon E-2356G 6C 80W 3.2G	1x 16GB	SATA	2x3.5"+ 1x2.5" bays; 1x 4TB HDD	Opt	Opt	Opt	500W 92% / Yes	Yes	1x HDMI	Opt
7D8JA01GLA	Xeon E-2388G 8C 95W 3.2G	1x 16GB	SATA	2x3.5"+ 1x2.5" bays; 1x 4TB HDD	Opt	Opt	Opt	500W 92% / Yes	Opt	Opt	Opt
7D8JA01JLA	Xeon E-2388G 8C 95W 3.2G	1x 16GB	SATA	2x3.5"+ 1x2.5" bays; 1x 4TB HDD	Opt	Opt	T1000	500W 92% / Yes	Opt	Opt	Opt
TopSeller models with a 3-year warranty (machine type 7D8J)											
7D8JA00VLA	Xeon E-2356G 6C 80W 3.2G	1x 16GB	SATA	2x3.5" bays; 2x 3.5" 960GB S4520	Opt	Opt	Opt	500W 92% / Yes	Yes	1x HDMI	Opt
Standard models with a 1-year warranty (machine type 7D8K)											
7D8K1000LA	Xeon E-2324G 4C 65W 3.1G	1x 16GB	SATA	2x3.5" bays; 1x 1TB HDD	Opt	1x 2x1Gb 5720	T1000	500W 92% / Yes	Yes	Opt	Opt
7D8K1001LA	Xeon E-2324G 4C 65W 3.1G	1x 16GB	SATA	2x3.5" bays; 1x 1TB HDD	Opt	1x 2x1Gb 5720	Opt	500W 92% / Yes	Yes	1x HDMI	Opt
TopSeller models with a 1-year warranty (machine type 7D8K)											
7D8KA009LA	Xeon E-2324G 4C 65W 3.1G	1x 16GB	SATA	2x3.5" bays; 1x 2TB Client HDD	Opt	Opt	T1000	500W 92% / Yes	Yes	Opt	Opt
7D8KA00ALA	Xeon E-2324G 4C 65W 3.1G	1x 16GB	SATA	2x3.5" bays; 1x 2TB HDD	Opt	Opt	Opt	500W 92% / Yes	Yes	1x HDMI	Opt
7D8KA00BLA	Xeon E-2324G 4C 65W 3.1G	1x 16GB	SATA	2x3.5" bays; 1x 2TB Client HDD	Opt	Opt	Opt	500W 92% / Yes	Yes	1x HDMI	Opt
7D8KA00MLA	Xeon E-2324G 4C 65W 3.1G	1x 16GB	SATA	2x3.5" bays; 1x 2TB Client HDD	Opt	Opt	T1000	500W 92% / Yes	Yes	Option	Opt
7D8KA00NLA	Xeon E-2324G 4C 65W 3.1G	1x 16GB	SATA	2x3.5" bays; 1x 2TB HDD	Opt	Opt	Opt	500W 92% / Yes	Yes	1x HDMI	Opt

† Processor description: Processor model, number of cores, thermal design power (TDP), core frequency

Models for USA and Canada

Table 12. Models for USA and Canada

Model	Intel processors†	Memory	Drive Contr	Drive bays (max 3); Drives	DVD	Cards	GPU	Power supply & cord	Rear fan	Video port kit	Intru sw.
Standard models with a 3-year warranty (machine type 7D8J)											
7D8JA02GNA	Xeon E-2324G 4C 65W 3.1G	1x16GB	SATA	2x3.5"+ 1x2.5" bays; Open bay	Opt	Opt	No	300W / Yes	Yes	Opt	Opt
7D8JA02FNA	Xeon E-2356G 6C 80W 3.2G	1x16GB	SATA	2x3.5"+ 1x2.5" bays; Open bay	Opt	Opt	No	300W / Yes	Yes	Opt	Opt
7D8JA02HNA	Xeon E-2378G 8C 80W 2.8G	1x16GB	SATA	2x3.5"+ 1x2.5" bays; Open bay	Opt	Opt	Opt	500W 92% / Yes	Yes	Opt	Opt

† Processor description: Processor model, number of cores, thermal design power (TDP), core frequency

Processors

The ST50 V2 supports one processor from the following Intel product families:

- Intel Xeon E-2300 Series processors ("Rocket Lake-E")
- Intel Pentium G6405, G6505 and G6605 processors ("Comet Lake Refresh")

All supported processors have the following characteristics:

- LGA 1200 socket (Socket H5)
- 14 nm semiconductor process technology
- Direct Media Interface (DMI) 3.0 connection to PCH
  - Xeon E-2300: DMI 3.0 x8 connection
  - Pentium: DMI 3.0 x4 connection
- Two DDR4 memory channels
- Support for ECC memory
  - Xeon E-2300: Up to 3200 MHz memory speed
  - Pentium: Up to 2666 MHz memory speed
- PCIe lanes:
  - Xeon E-2300: 20x PCIe 4.0 I/O lanes
  - Pentium: 16x PCIe 3.0 I/O lanes

The following table lists the supported processors.

Integrated graphics: As indicated in the table, some processors do not include Integrated graphics. if you use one of these processors in your configuration, you will also need to select a GPU adapter.

Table 13. Supported processors

Feature code	Intel model	TDP	Cores / threads	HT	Integ. video	Core speed / Max TB	Cache	Max memory speed	VT	AMT	Intel SGX / Enclave†
Intel Pentium processors											
BMDN	G6405	58W	2 / 4	Yes	Yes	4.1 GHz / No TB	4 MB	2666 MHz	Yes	No	No
BMDQ	G6405T	35W	2 / 4	Yes	Yes	3.5 GHz / No TB	4 MB	2666 MHz	Yes	No	No
BMDM	G6505	58W	2 / 4	Yes	Yes	4.2 GHz / No TB	4 MB	2666 MHz	Yes	No	No
BMDP	G6505T	35W	2 / 4	Yes	Yes	3.6 GHz / No TB	4 MB	2666 MHz	Yes	No	No
BMDL	G6605	58W	2 / 4	Yes	Yes	4.3 GHz / No TB	4 MB	2666 MHz	Yes	No	No
Intel Xeon E processors											
BMDD	E-2314	65W	4 / 4	No	No	2.8 GHz / 4.5 GHz	8 MB	3200 MHz	Yes	Yes*	No
BMDK	E-2324G	65W	4 / 4	No	Yes	3.1 GHz / 4.6 GHz	8 MB	3200 MHz	Yes	Yes	No
BMDC	E-2334	65W	4 / 8	Yes	No	3.4 GHz / 4.8 GHz	8 MB	3200 MHz	Yes	Yes*	No
BMDB	E-2336	65W	6 / 12	Yes	No	2.9 GHz / 4.8 GHz	12 MB	3200 MHz	Yes	Yes*	No
BMDH	E-2356G	80W	6 / 12	Yes	Yes	3.2 GHz / 5.0 GHz	12 MB	3200 MHz	Yes	Yes	No
BMDJ	E-2374G	80W	4 / 8	Yes	Yes	3.7 GHz / 5.0 GHz	8 MB	3200 MHz	Yes	Yes	No
BMDA	E-2378	65W	8 / 16	Yes	No	2.6 GHz / 4.8 GHz	16 MB	3200 MHz	Yes	Yes*	No
BMDF	E-2378G	80W	8 / 16	Yes	Yes	2.8 GHz / 5.1 GHz	16 MB	3200 MHz	Yes	Yes	No
BMDG	E-2386G	95W	6 / 12	Yes	Yes	3.5 GHz / 5.1 GHz	12 MB	3200 MHz	Yes	Yes	No
BMDE	E-2388G	95W	8 / 16	Yes	Yes	3.2 GHz / 5.1 GHz	16 MB	3200 MHz	Yes	Yes	No

* Xeon E processors without integrated graphics do not support the KVM redirection functions of AMT.
† Intel SGX with Intel SPS / Intel SGX Enclave Page Cache size. Not supported in the ST50 V2.

Memory options

The ST50 V2 supports Lenovo TruDDR4 memory. TruDDR4 memory uses the highest-quality components sourced from Tier 1 DRAM suppliers and only memory that meets strict requirements is selected. It is compatibility-tested and tuned to maximize performance and reliability.

TruDDR4 memory has a unique signature programmed into the DIMM, which enables ThinkSystem servers to verify whether the memory installed is qualified and supported. From a service and support standpoint, TruDDR4 memory automatically assumes the system's warranty, and service and support provided worldwide.

The processors have 2 memory channels and support 2 DIMMs per channel. The ST50 V2 supports 1, 2 or 4 DIMMs. 3 installed DIMMs is not supported. All DIMMs installed must be identical.

DIMMs installed in the ST50 V2 operate at a speed based on the processor installed, the number of DIMMs installed, and whether the DIMMs are single-rank or dual-rank:

- When connected to a Xeon processor:
  - 1 or 2 DIMMs: 3200 MHz
  - 4 single-rank (1R) DIMMs: 3200 MHz
  - 4 dual-rank (2R) DIMMs: 2933 MHz
- When connected to a Pentium processor:
  - 1 or 2 DIMMs (1 DPC): 2666 MHz
  - 4 single-rank (1R) DIMMs: 2666 MHz
  - 4 dual-rank (2R) DIMMs: 2400 MHz

The following table lists the memory options that are available for the ST50 V2 server.

Table 14. Tatlow memory section

Part number	Feature code	Description	Maximum supported
4X77A77494	BMDV	ThinkSystem 8GB TruDDR4 3200 MHz (1Rx8, 1.2V) ECC UDIMM	4
4X77A77495	BMDW	ThinkSystem 16GB TruDDR4 3200 MHz (2Rx8, 1.2V) ECC UDIMM	4
4X77A77496	BMT4	ThinkSystem 32GB TruDDR4 3200MHz (2Rx8, 1.2V) ECC UDIMM	4

The following rules apply when selecting the memory configuration:

- The server only supports UDIMMs
- Quantities of 1, 2 or 4 DIMMs are supported. 3 DIMMs is not supported.
- All DIMMs must be identical (same part number)
- When installing two DIMMs, install one in each memory channel (DIMM slots 1 and 3)
- Memory mirroring and memory rank sparing are not supported

Internal storage

The ST50 V2 supports up to three non-hot-swap drives, one 2.5-inch and two 3.5-inch drives. The system also supports an 9mm slim SATA optical disk drive.

Topics in this section:

- Drive bays
- M.2 drives
- Field upgrades

For information about the optical drive, see the Optical drives section.

Drive bays

The drive bays are as follows:

- Drive bay 1: 3.5-inch HDD or SSD, non-hot-swap
- Drive bay 2: 2.5-inch SSD, non-hot-swap, optional
- Drive bay 3: 3.5-inch HDD or SSD, non-hot-swap, optional

The location of these bays is shown in the following figure.

Note: Drive bays 1, 2 and 3 are only accessible from the side of the server, with the cover removed. The drive bays are not front accessible.

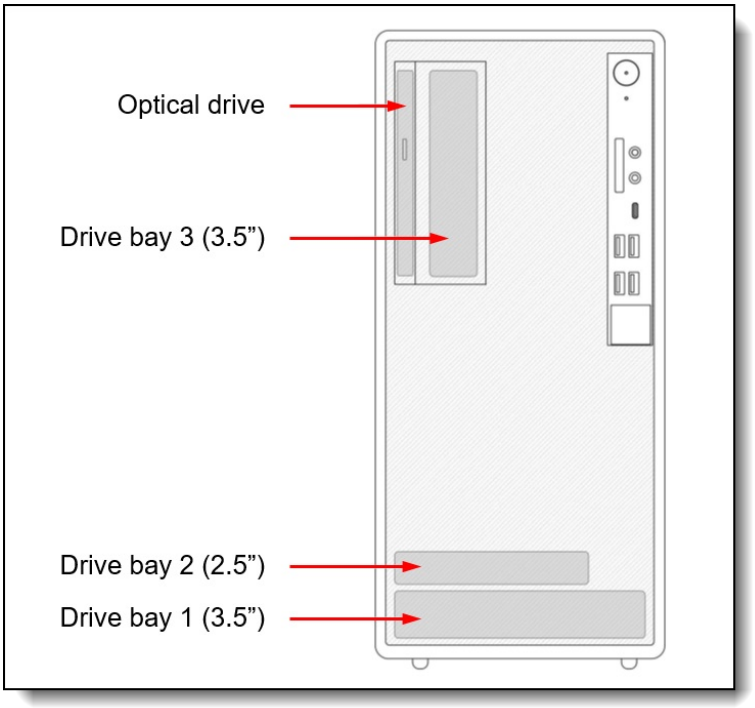

Figure 6. ST50 V2 drive bays (front view)

The following figure shows the internals of the server with the drive bays and optical drive installed.

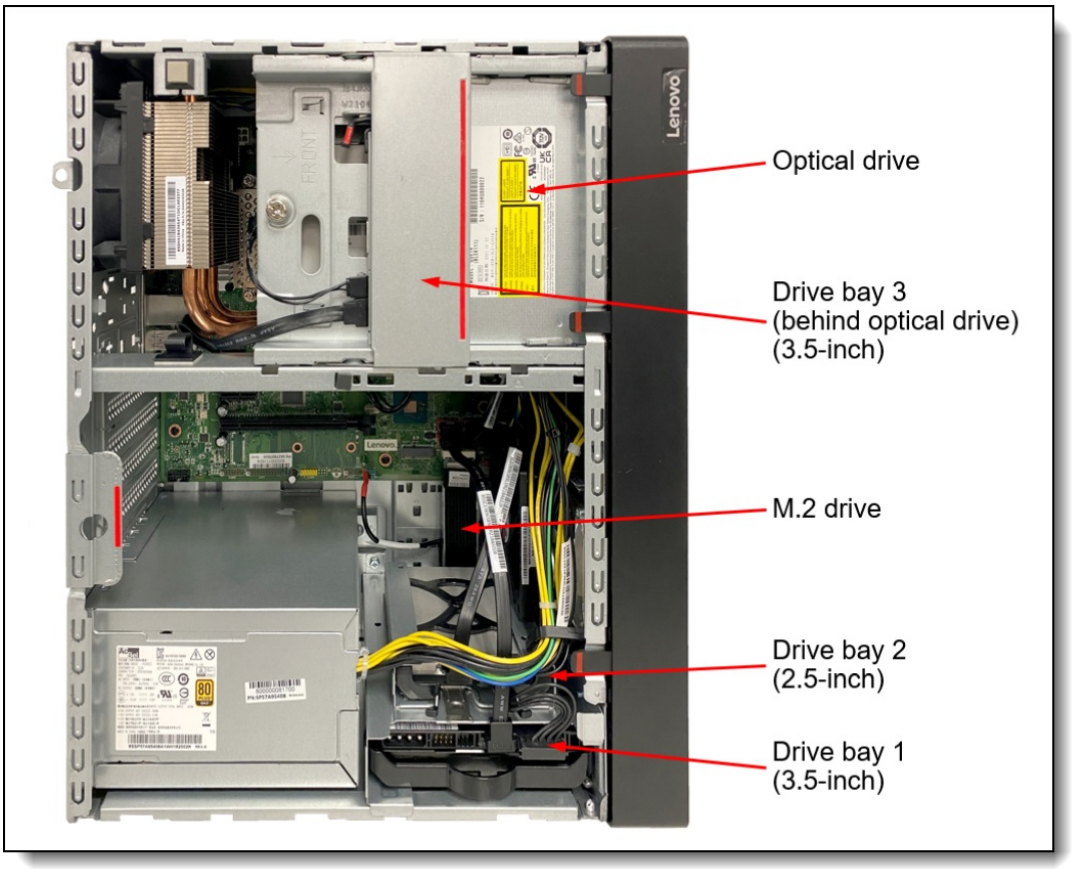

Figure 7. ST50 V2 drive bays (side view)

Drive bays 2 and 3 are optional. For CTO orders, the following table lists the ordering information to configure these bays.

Cables not included: The feature codes listed in the table do not automatically derive the cables needed for connectivity to drives. These cables *are* derived if drives are included in the CTO order. The part numbers *do* included the cables as described in the Field upgrades section.

Use of Client HDDs and Bay 2: As described in the Special Notice for Client drives section, Client HDDs cannot be in the server along with other drive types. The impact of this rule is that in CTO orders, the 2.5-inch drive bay (Bay 2) is not selectable if you select any client HDDs.

Table 15. Drive bays

Part number	Feature code	Description
4XF7A78617*	BME0	ThinkSystem ST50 V2 2.5" Drive Bay 2 Cage Kit Bracket to mount a 2.5-inch drive to drive bay 2
4XF7A79662*	BME1	ThinkSystem ST50 V2 3.5" Drive Bay 3 Cage Kit Bracket to mount a 3.5-inch drive to drive bay 3

* The option part number includes SATA and power cables. See Field upgrades for details.

M.2 drives

The ST50 V2 supports a single M.2 drive, mounted in a bracket. Ordering information for the bracket is listed in the following table.

Table 16. M.2 drives

Part number	Feature code	Description
4XF7A79661	BMEK	ThinkSystem ST50 V2 NVMe M.2 Bracket Kit

The following figure shows how the M.2 bracket is used.

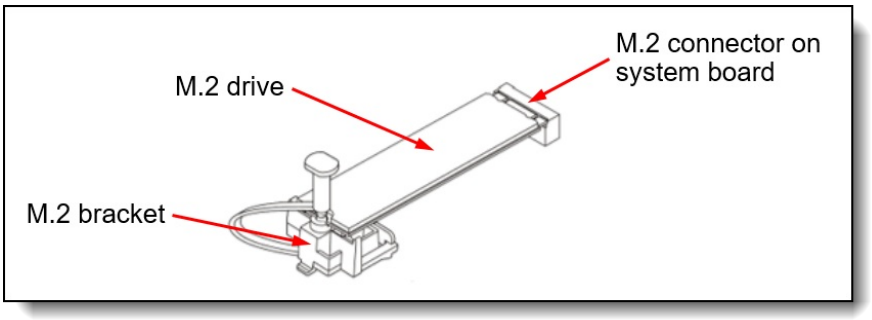

Figure 8. ThinkSystem ST50 V2 NVMe M.2 Bracket Kit

Supported M.2 drives are listed in the Internal drive options section.

Field upgrades

The ST50 V2 supports the following upgrades:

- Add drives to a zero drive (drive-less) server
- Add a RAID adapter or HBA to replace the onboard SATA drive controller
- Add drive bays
- Add an optical drive, as described in the Optical drives section

If you are planning to do a field upgrade of a server without drives to add drives that connect to the onboard SATA controller, you will need the power cables from the ThinkSystem ST50 V2 Internal Drive Cable Kit, 4X97A78621, plus the SATA cables that are included in each drive option.

If you are planning to do a field upgrade to add a RAID adapter or HBA, you will need the cables from ThinkSystem ST50 V2 Internal Drive Cable Kit, 4X97A78621, The MiniSAS data cable in the kit will replace the SATA data cables to all three drives. Use the power cables if you are upgrading from a server without any drives otherwise use the existing power cables already installed.

The following table lists the ordering information.

Table 17. Field upgrades

Part number	Description	Purpose
Drive bay field upgrades		
4XF7A78617	ThinkSystem ST50 V2 2.5" Drive Bay 2 Cage Kit, contains: • Cage to mount a 2.5-inch drive to drive bay 2 (SBB7A46043)	Add drive bay 2
4XF7A79662	ThinkSystem ST50 V2 3.5" Drive Bay 3 Cage Kit, contains: • Cage to mount a 3.5-inch drive to drive bay 3 (SBB7A46044) • 520mm SATA cable for drive bay 3 (SBB7A46040) • Power cable for drive bay 3 (SBB7A46086) • EMI shielding kit for drive bay 3 (SBB7A50242) **Requirements**: • The rear system fan is required, either preinstalled or by ordering ThinkSystem ST50 V2 System Rear Fan Kit, 4F17A80568. • Drive bay 3 mounts on the optical drive cage. The optical drive cage (with or without the optical drive) is therefore required, either preinstalled or by ordering ThinkSystem ST50 V2 Slim ODD Cage Kit, 4XF7A78619	Add drive bay 3. Requires the rear system fan and the optical drive cage (with or without the optical drive installed).
Cable kit for field upgrades		
4X97A78621	ThinkSystem ST50 V2 Internal Drive Cable Kit, contains: • 1xSAS-to-4xSATA data cable, connects RAID/HBA to 3x SATA drives (SBB7A09984) • 520mm SATA cable for drive bay 3 (SBB7A46040) • Power cable for drive bay 3 and the optical drive (SBB7A46041) • Power cable for drive bays 1 and 2 (SBB7A46039) **Tip**: All HDD and SSD drive options include the 185mm SATA cable for use with drive bay 1 or bay 2. The 520mm SATA cable is needed for use with drive bay 3.	Cables used in two scenarios: • When adding drives to a server with drive bays (cages) but without any drives installed • When upgrading from onboard SATA to an HBA or RAID adapter

Controllers for internal storage

The ST50 V2 has an onboard 6Gbps SATA controller with 3 connections on the system board for the 3 internal drive bays. These ports can be used in either AHCI (JBOD) mode or RSTe (RAID) mode. RSTe mode supports RAID 0, 1 and 5.

Advanced RAID support or HBA support is available with the addition of a RAID adapter or HBA as listed in the following table.

Table 18. Adapters for internal storage

Part number	Feature code	Description	Slots supported	Maximum supported
Adapters				
4Y37A72482	BJHK	ThinkSystem RAID 5350-8i PCIe 12Gb Adapter	1	1
4Y37A72480	BJHH	ThinkSystem 4350-8i SAS/SATA 12Gb HBA	1	1

For a comparison of the functions of the supported storage adapters, see the ThinkSystem RAID Adapter and HBA Reference: https://lenovopress.com/lp1288-lenovo-thinksystem-raid-adapter-and-hba-reference#st50-v2-support=ST50%2520V2

Configuration notes:

- **RAID array support**: For CTO orders, you can only form a RAID array (RAID-0 or RAID-1) using the two 3.5-inch drives. If you require a CTO RAID configuration of three drives (RAID-5), then SSDs will be required for all drives and you will need to request a Special Bid order. RAID-5 is supported if configured in the field, provided all drives are SSDs.
- **Virtualization support**: The SATA ports can be used with virtualization hypervisors, including VMware ESXi, Linux KVM, Xen, and Microsoft Hyper-V, however support is limited to AHCI (non-RAID) mode. RSTe mode is not supported with virtualization hypervisors.
- **E810 Ethernet and X350 RAID/HBAs**: The use of both an Intel E810 network adapter and an X350 HBA/RAID adapter (9350, 5350 and 4350) is currently not supported in ThinkSystem servers. For details see Support Tip HT513226. Planned support for this combination of adapters is 4Q/2023 (SI 23-2).

Internal drive options

The ST50 V2 supports one or two 3.5-inch non-hot-swap drives and optionally one 2.5-inch non-hot-swap drive.

Each drive option part number includes:

- Tray to mount the drive in the server
- 185mm SATA signal cable to connect the drive (when installed in bay 1 or 2) to the onboard SATA controller on the system board.

The SATA cable needed when the drive is installed in bay 3 is preinstalled, included with ThinkSystem ST50 V2 3.5" Drive Bay 3 Cage Kit, 4XF7A79662, or included with ThinkSystem ST50 V2 Internal Drive Cable Kit, 4X97A78621. See the Field upgrades section for details.

For CTO orders, the necessary cables and trays will be derived by the configurator.

The following tables list the drive options for internal storage of the server.

Simple-swap drives:

- 2.5-inch simple-swap 6 Gb SATA SSDs
- 3.5-inch simple-swap 6 Gb SATA HDDs
- 3.5-inch simple-swap 6 Gb SATA SSDs

M.2 drives:

- M.2 PCIe 4.0 NVMe drives

M.2 drive support: The use of M.2 drives requires an additional bracket as described in the M.2 drives subsection.

SED support: The tables include a column to indicate which drives support SED encryption. The encryption functionality can be disabled if needed. Note: Not all SED-enabled drives have "SED" in the description.

Table 19. 2.5-inch simple-swap 6 Gb SATA SSDs

Part number	Feature code	Description	SED support	Max Qty
2.5-inch simple-swap SSDs - 6 Gb SATA - Read Intensive/Entry (<3 DWPD)				
4XB7A82273	BR0S	ThinkSystem ST50 V2 2.5" 5400 PRO 240GB Read Intensive SATA 6Gb NHS SSD	Support	1
4XB7A82274	BR0R	ThinkSystem ST50 V2 2.5" 5400 PRO 480GB Read Intensive SATA 6Gb NHS SSD	Support	1
4XB7A82275	BR0Q	ThinkSystem ST50 V2 2.5" 5400 PRO 960GB Read Intensive SATA 6Gb NHS SSD	Support	1
4XB7A77459	BMEB	ThinkSystem ST50 V2 2.5" S4520 240GB Read Intensive SATA 6Gb NHS SSD	No	1
4XB7A77460	BMEA	ThinkSystem ST50 V2 2.5" S4520 480GB Read Intensive SATA 6Gb NHS SSD	No	1
4XB7A77461	BME9	ThinkSystem ST50 V2 2.5" S4520 960GB Read Intensive SATA 6Gb NHS SSD	No	1

Table 20. 3.5-inch simple-swap 6 Gb SATA HDDs

Part number	Feature code	Description	SED support	Max Qty
3.5-inch simple-swap HDDs - 6 Gb NL SATA				
4XB7A77445	BMED	ThinkSystem ST50 V2 3.5" 1TB 7.2K SATA 6Gb NHS 512n HDD	No	2
4XB7A77446	BMEC	ThinkSystem ST50 V2 3.5" 2TB 7.2K SATA 6Gb NHS 512n HDD	No	2
4XB7A77447	BMEG	ThinkSystem ST50 V2 3.5" 4TB 7.2K SATA 6Gb NHS 512n HDD	No	2
4XB7A77448	BMEF	ThinkSystem ST50 V2 3.5" 6TB 7.2K SATA 6Gb NHS 512e HDD	No	2
4XB7A77449	BMEE	ThinkSystem ST50 V2 3.5" 8TB 7.2K SATA 6Gb NHS 512e HDD	No	2
4XB7A77450	BMEJ	ThinkSystem ST50 V2 3.5" 1TB Client 7.2K SATA 6Gb NHS 512e HDD	No	2*
4XB7A77451	BMEH	ThinkSystem ST50 V2 3.5" 2TB Client 7.2K SATA 6Gb NHS 512e HDD	No	2*

* Support for client drives has special conditions of use. See Special Notice for Client drives for details

Table 21. 3.5-inch simple-swap 6 Gb SATA SSDs

Part number	Feature code	Description	SED support	Max Qty
3.5-inch simple-swap SSDs - 6 Gb SATA - Read Intensive/Entry (<3 DWPD)				
4XB7A82276	BR0P	ThinkSystem ST50 V2 3.5" 5400 PRO 240GB Read Intensive SATA 6Gb NHS SSD	Support	2
4XB7A82277	BR0N	ThinkSystem ST50 V2 3.5" 5400 PRO 480GB Read Intensive SATA 6Gb NHS SSD	Support	2
4XB7A82278	BR0M	ThinkSystem ST50 V2 3.5" 5400 PRO 960GB Read Intensive SATA 6Gb NHS SSD	Support	2
4XB7A77454	BME2	ThinkSystem ST50 V2 3.5" S4520 240GB Read Intensive SATA 6Gb NHS SSD	No	2
4XB7A77455	BME6	ThinkSystem ST50 V2 3.5" S4520 480GB Read Intensive SATA 6Gb NHS SSD	No	2
4XB7A77456	BME5	ThinkSystem ST50 V2 3.5" S4520 960GB Read Intensive SATA 6Gb NHS SSD	No	2

Table 22. M.2 PCIe 4.0 NVMe drives

Part number	Feature code	Description	SED support	Max Qty
M.2 SSDs - PCIe 4.0 NVMe - Read Intensive/Entry (<3 DWPD)				
4XB7A90102	BXMH	ThinkSystem M.2 PM9A3 960GB Read Intensive NVMe PCIe 4.0 x4 NHS SSD	Support	1
4XB7A82636	BS2P	ThinkSystem M.2 7450 PRO 480GB Read Intensive NVMe PCIe 4.0 x4 NHS SSD	Support	1
4XB7A13999	BKSR	ThinkSystem M.2 7450 PRO 960GB Read Intensive NVMe PCIe 4.0 x4 NHS SSD	Support	1

Special notice for Client drives

The ST50 V2 supports both Client HDDs and Enterprise Class HDDs. Client HDDs are designed for 8x5 operating environment whereas Enterprise Class HDDs are designed for 24x7 operating environment. Selecting the correct drive class will enable the critical areas of quality, functionality, performance, and reliability to be optimized for the target implementation.

When using Client Hard Disk Drives, you agree to the following terms of service:

- Update the firmware once you receive the server according to the "Lenovo Client HDD Upgrade for Windows and Linux" document in the download page: https://datacentersupport.lenovo.com/products/servers/thinksystem/st50/7y48/downloads/driver-list/component?name=Storage
- The use of the Lenovo Online SAS/SATA Hard Disk Drive Update Program is not supported.
- Maximum of 2 Client HDDs per server is supported
- Mixing Client HDDs with other drives is not supported.
- Only supported connected to the server's onboard 6Gbps SATA controller. RAID adapters and HBAs are not supported.
- Operational availability: 8 hours/day, 5 days/week.
- Workload rate limit: < 55 TB/year*

Choosing the right drive type depends on the usage pattern. Improper use of Client HDDs (such as the workload rate exceeding 55 TB/year) will lead to significant risk and increase the drives failure rate.

* The specifications for the product assumes the I/O workload does not exceed the average annualized workload rate limit of 55 TB/year. Workloads exceeding the annualized rate may degrade and impact reliability as experienced by the particular application. The average annualized workload rate limit is in units of TB per calendar year.

USB memory key

For general portable storage needs, the server also supports the USB memory key option that is listed in the following table.

Table 24. USB memory key

Part number	Feature	Description
4X77A08621	B8NV	ThinkSystem 32GB USB Flash Drive

Internal backup units

The server does not supports any internal backup unit, such as a tape drive or RDX drive. External backup units are available as described in the External backup units section.

Optical drives

The ST50 V2 optionally supports an internal optical drive. CTO ordering information is listed in the following table.

Table 25. Internal optical drive

Feature code	Description
Optical drive	
BMEU	ThinkSystem ST50 V2 9mm-Slim SATA DVD-RW
CTO features	
BMEX	ThinkSystem ST50 V2 Slim ODD Cage Kit - Bracket to mount the optical drive
BMEW	ThinkSystem ST50 V2 Slim ODD Bezel Kit - Front bezel for the optical drive
BMEV	ThinkSystem ST50 V2 W/O Slim ODD Bezel Kit - Front bezel when no optical drive is configured

To add the optical drive as a field upgrade, use the parts listed in the following table.

Table 26. Optical drive field upgrades

Part number	Description	Purpose
4XA7A77462	ThinkSystem ST50 V2 Slim SATA DVD-RW Optical Drive Kit, contains: • Optical drive - ThinkSystem ST50 V2 9mm-Slim SATA DVD-RW (SBB7A45066) • 520mm SATA cable for optical drive (SBB7A46040) • Power cable for Drive bay 3 and optical drive (SBB7A46041) • Bezel for optical drive (SBB7A46134)	To add the optical drive, cables and front bezel. Requires the optical drive cage (preinstalled or by ordering 4XF7A78619 or 4XF7A78618)
4XF7A78619	ThinkSystem ST50 V2 Slim ODD Cage Kit, contains: • Cage to mount the optical drive (SBB7A50144)	To enable the use of an optical drive. Order the drive itself using 4XA7A77462. For systems without an optical drive cage.
4XF7A78618	ThinkSystem ST50 V2 3.5" Drive Bay 3 Cage + ODD Cage Kit, contains: • Cage to mount the optical drive (SBB7A50144) • Cage to mount drive bay 3 (SBB7A46044) • Power cable for drive bay 3 (SBB7A46086) • 520mm SATA cable for drive bay 3 (SBB7A46040) • EMI shielding kit for drive bay 3 (SBB7A50242)	To enable the use of an optical drive and drive bay 3. Mutually exclusive with 4XF7A78619 and 4XF7A79662 (Bay 3 upgrade). Order the drive itself using 4XA7A77462. For systems without both the optical drive cage and drive bay 3.

The optical drive is based on the HLDS Model GUE1N Super Multi DVD Writer and supports the following formats:

- DVD-ROM, DVD-ROM DL, DVD-R, DVD-R DL, DVD-RW, DVD-RAM, DVD+R, DVD+R DL, DVD+RW
- CD-ROM, CD-ROM XA, CD-I, Video CD, CD-Audio, CD-Extra, CD-Text, CD-R, CD-RW

External optical drive

The server supports the external USB optical drive listed in the following table.

Table 27. External optical drive

Part number	Feature code	Description
7XA7A05926	AVV8	ThinkSystem External USB DVD RW Optical Disk Drive

The drive is based on the Lenovo Slim DVD Burner DB65 drive and supports the following formats: DVD-RAM, DVD-RW, DVD+RW, DVD+R, DVD-R, DVD-ROM, DVD-R DL, CD-RW, CD-R, CD-ROM.

I/O expansion options

The ST50 V2 server has three PCIe 3.0 slots:

- Slot 1: PCIe 4.0 x16 (physical connector is x16) full-height half-length (FHHL)
- Slot 2: PCIe 3.0 x1 (physical connector is x1, open ended) full-height half-length (FHHL)
- Slot 3: PCIe 3.0 x4 (physical connector is x16) full-height half-length (FHHL)

Slot 3: Slot 3 physically supports x8 and x16 adapters, however only 4 lanes (x4) are connected. Performance may be impacted with x8 and x16 adapters as a result.

Pentium processor: When a Pentium processor is selected, slot 1 is a PCIe 3.0 (G3) slot.

The following figure shows the locations of the PCIe slots.

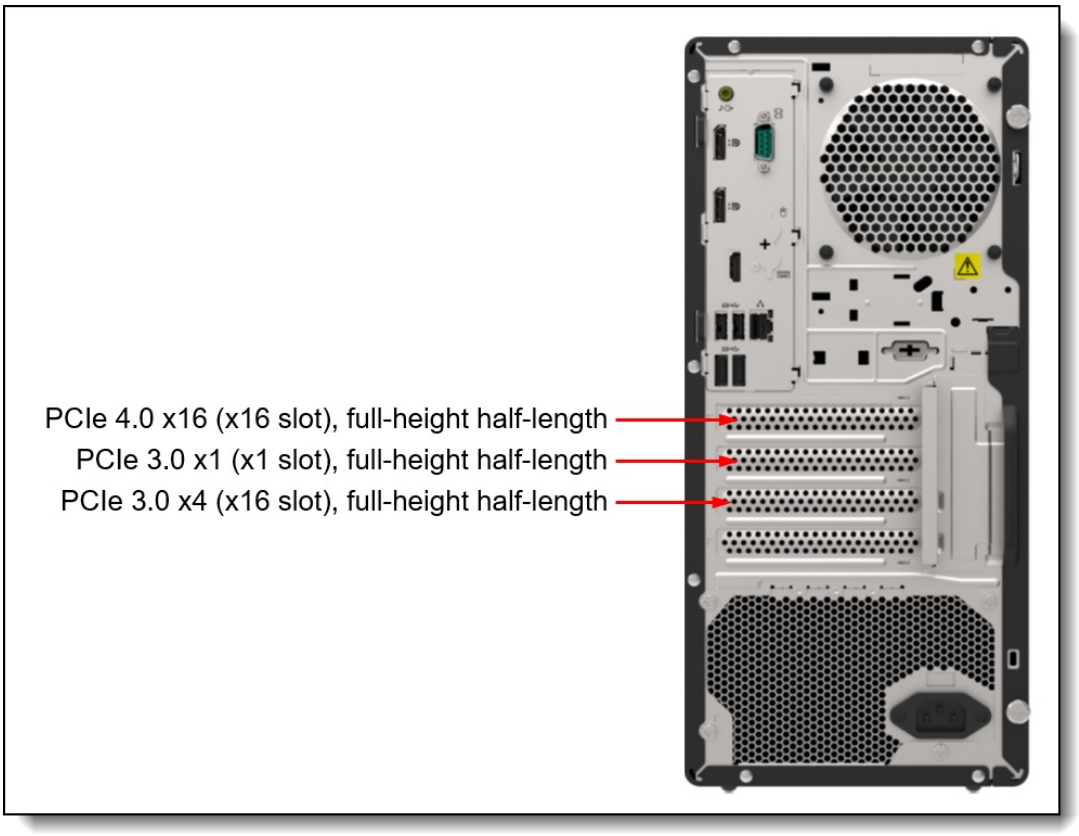

Figure 9. ThinkSystem ST50 V2 PCIe slots

Network adapters

The server has one integrated Gigabit Ethernet port that is based on the Intel I219-LM NIC (a shared port for operating system access and management network).

The onboard NIC has the following features:

- 1 Gb Ethernet IEEE 802.3, 802.3u, and 802.3ab PHY specifications compliant
- Integrated PHY for 10/100/1000 Mbps with speed and duplex auto-negotiation
- Energy Efficient Ethernet (IEEE 802.3az)
- Wake on LAN
- Class of Service (CoS) priority (IEEE 802.1p) marking

- TCP/UDP checksum and segmentation offload (IPv4 and IPv6)
- Receive Side Scaling
- Jumbo Frames (up to 9K)
- Timing and Synchronization (IEEE 802.1as / IEEE 1588)
- Load balancing and failover teaming support:
  - Adapter fault tolerance (AFT)
  - Switch fault tolerance (SFT)
  - Adaptive load balancing (ALB)

PXE boot restriction: The onboard I219-LM Ethernet controller in the ST50 V2 has some incompatibilities with PXE Boot. Therefore, if you plan to implement PXE Boot functionality on the server, it is recommended that you install a separate network adapter.

The following table lists other supported network adapters. The maximum supported column indicates which slots each adapter is supported in. For slot locations see the I/O expansion options section.

Table 28. Network adapters

Part number	Feature code	Description	Slots supported	Maximum supported
Gigabit Ethernet				
7ZT7A00484	AUZV	ThinkSystem Broadcom 5719 1GbE RJ45 4-Port PCIe Ethernet Adapter	3	1
7ZT7A00482	AUZX	ThinkSystem Broadcom 5720 1GbE RJ45 2-Port PCIe Ethernet Adapter	2,3	2
7ZT7A00534	AUZY	ThinkSystem I350-T2 PCIe 1Gb 2-Port RJ45 Ethernet Adapter	1,3	2
7ZT7A00535	AUZW	ThinkSystem I350-T4 PCIe 1Gb 4-Port RJ45 Ethernet Adapter	1,3	2
10 Gb Ethernet				
7ZT7A00496	AUKP	ThinkSystem Broadcom 57416 10GBASE-T 2-Port PCIe Ethernet Adapter	1,3	2
00MM860	ATPX	Intel X550-T2 Dual Port 10GBase-T Adapter	1,3	2
25 Gb Ethernet				
4XC7A08295	BCD6	ThinkSystem Intel E810-DA2 10/25GbE SFP28 2-Port PCIe Ethernet Adapter	1,3	2

Configuration notes:

- For more information, including the transceivers and cables that each adapter supports, see the list of Lenovo Press Product Guides in the Ethernet adapters category: https://lenovopress.com/servers/options/ethernet
- **E810 Ethernet and X350 RAID/HBAs**: The use of both an Intel E810 network adapter and an X350 HBA/RAID adapter (9350, 5350 and 4350) is currently not supported in ThinkSystem servers. For details see Support Tip HT513226. Planned support for this combination of adapters is 4Q/2023 (SI 23-2).

SAS adapters for external storage

The ST50 V2 currently does not support SAS adapters for external storage.

Fibre Channel host bus adapters

The ST50 V2 does not support Fibre Channel host bus adapters.

Flash Storage adapters

The ST50 V2 does not support Flash Storage adapters.

GPU adapters

The ST50 V2 server supports the graphics processing units (GPUs) listed in the following table.

Notes:

- If the processor selected does not include integrated graphics, then a GPU must be selected. See the Processors section for specifics.
- If a GPU is installed in a server that has a processor with integrated graphics, the integrated graphics (and the two DisplayPort video ports) will be disabled.
- The use of a GPU requires a power supply of at least a 300W capacity

Table 29. GPU adapters

Part number	Feature code	Description	Slots supported	Maximum supported
4X67A79777	BMXD	ThinkSystem NVIDIA Quadro RTX T1000 8GB PCIe Active GPU	1	1

For details about the supported GPUs, see the ThinkSystem GPU Summary:
https://lenovopress.com/lp0768-thinksystem-gpu-summary

Cooling

The server has the following variable-speed fans:

- One 80mm system fan at the front of the server inside the front bezel
- One optional 92mm system fan at the rear of the server
- Fan mounted on the heatsink of the processor (only for processors ≤ 80W)
- Power supply fan

With processors with TDP ≤ 80W a heatsink with fan is attached directly to the processor. With processors with TDP > 80W, the processor heatsink is instead attached directly to the rear system fan and is connected to the processor via heat-transfer pipes. These heatsinks are shown in the following figure.

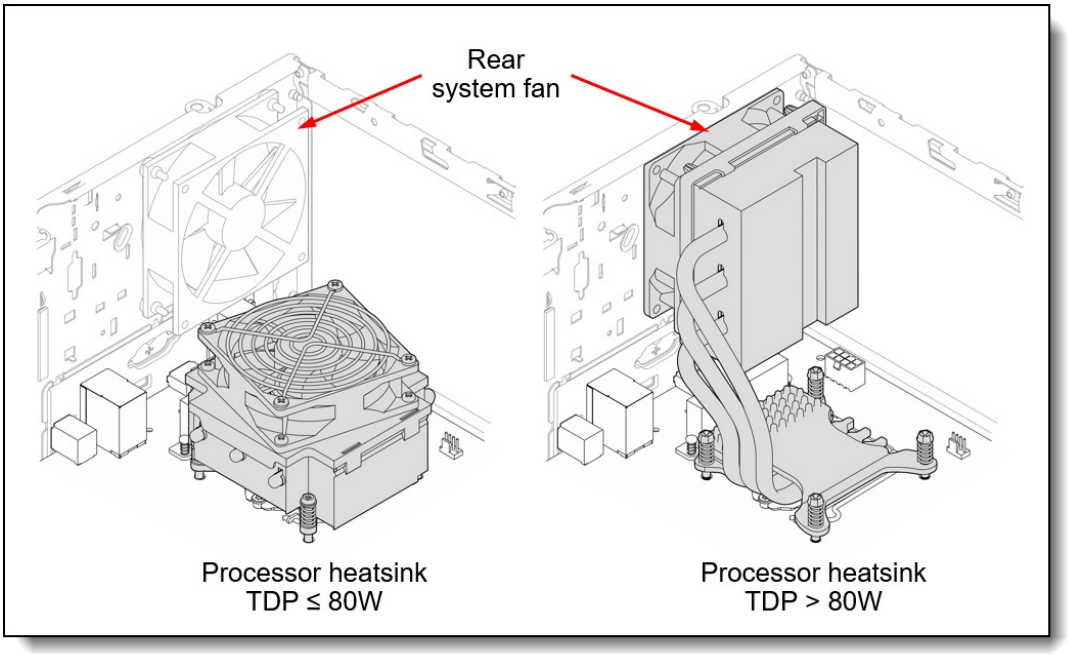

Figure 10. ST50 V2 processor heatsinks

See the Inside view in the Components and connectors section for locations.

Ordering information is listed in the following table.

Table 30. Rear fan option

Part number	Feature code	Description
4F17A80568	BMDY	ThinkSystem ST50 V2 System Rear Fan Kit For use with processors ≤ 80W TDP

Requirements:

- When the third drive bay is installed (BME1 or 4XF7A79662 or 4XF7A78618), the rear fan is required

Power supplies

The ST50 V2 server supports a single fixed (non-hot-swap) power supply. The power supply cannot be upgraded.

The inclusion of a power cord is model dependent as listed in the Models section.

Table 31. Power supply options

Feature code	Chassis base	Capacity	Voltage	ErP Lot 9 compliant	80 PLUS certification
BMFL*	ATX-300W Power Supply	300W	100-240V (autosensing)	No	Gold (90%)*
BMFM	ThinkSystem ST50 V2 Platinum ATX-500W Power Supply	500W	100-240V (autosensing)	No	Platinum (92%)
BMTC	ThinkSystem 500W Platinum ATX Power Supply	500W	100-240V (autosensing)	Yes	Platinum (94%)

* Not available in EU countries nor in the UK

The following restrictions apply when using the 300W power supply:

- 8-core processors (E-2378, E-2378G, E-2388G) are not supported

Power cords

Line cords and rack power cables with C13 connectors can be ordered as listed in the following table.

Table 32. Power cords

Part number	Feature code	Description
Rack cables - C13 to C14		
SL67B08593	BPHZ	0.5m, 10A/100-250V, C13 to C14 Jumper Cord
00Y3043	A4VP	1.0m, 10A/100-250V, C13 to IEC 320-C14 Rack Power Cable
4L67A08367	B0N5	1.0m, 13A/100-250V, C13 to C14 Jumper Cord
39Y7937	6201	1.5m, 10A/100-250V, C13 to IEC 320-C14 Rack Power Cable
4L67A08368	B0N6	1.5m, 13A/100-250V, C13 to C14 Jumper Cord
4L67A08365	B0N4	2.0m, 10A/100-250V, C13 to IEC 320-C14 Rack Power Cable
4L67A08369	6570	2.0m, 13A/100-250V, C13 to C14 Jumper Cord
4L67A08366	6311	2.8m, 10A/100-250V, C13 to IEC 320-C14 Rack Power Cable
4L67A08370	6400	2.8m, 13A/100-250V, C13 to C14 Jumper Cord
39Y7932	6263	4.3m, 10A/100-250V, C13 to IEC 320-C14 Rack Power Cable
4L67A08371	6583	4.3m, 13A/100-250V, C13 to C14 Rack Power Cable
Rack cables - C13 to C14 (Y-cable)		
00Y3046	A4VQ	1.345m, 2X C13 to C14 Jumper Cord, Rack Power Cable
00Y3047	A4VR	2.054m, 2X C13 to C14 Jumper Cord, Rack Power Cable
Rack cables - C13 to C20		
39Y7938	6204	2.8m, 10A/100-250V, C13 to IEC 320-C20 Rack Power Cable
Rack cables - C13 to C20 (Y-cable)		
47C2491	A3SW	1.2m, 16A/100-250V, 2 Short C13s to Short C20 Rack Power Cable
47C2492	A3SX	2.5m, 16A/100-250V, 2 Long C13s to Short C20 Rack Power Cable
47C2493	A3SY	2.8m, 16A/100-250V, 2 Short C13s to Long C20 Rack Power Cable
47C2494	A3SZ	4.1m, 16A/100-250V, 2 Long C13s to Long C20 Rack Power Cable
Line cords		
39Y7930	6222	2.8m, 10A/250V, C13 to IRAM 2073 (Argentina) Line Cord
81Y2384	6492	4.3m 10A/220V, C13 to IRAM 2073 (Argentina) Line Cord
39Y7924	6211	2.8m, 10A/250V, C13 to AS/NZ 3112 (Australia/NZ) Line Cord
81Y2383	6574	4.3m, 10A/230V, C13 to AS/NZS 3112 (Aus/NZ) Line Cord
69Y1988	6532	2.8m, 10A/250V, C13 to NBR 14136 (Brazil) Line Cord
81Y2387	6404	4.3m, 10A/250V, C13 - 2P+Gnd (Brazil) Line Cord
39Y7928	6210	2.8m, 220-240V, C13 to GB 2099.1 (China) Line Cord
81Y2378	6580	4.3m, 10A/220V, C13 to GB 2099.1 (China) Line Cord
39Y7918	6213	2.8m, 10A/250V, C13 to DK2-5a (Denmark) Line Cord
81Y2382	6575	4.3m, 10A/230V, C13 to DK2-5a (Denmark) Line Cord
39Y7917	6212	2.8m, 10A/230V, C13 to CEE7-VII (Europe) Line Cord

Part number	Feature code	Description
81Y2376	6572	4.3m, 10A/230V, C13 to CEE7-VII (Europe) Line Cord
39Y7927	6269	2.8m, 10A/250V, C13(2P+Gnd) (India) Line Cord
81Y2386	6567	4.3m, 10A/240V, C13 to IS 6538 (India) Line Cord
39Y7920	6218	2.8m, 10A/250V, C13 to SI 32 (Israel) Line Cord
81Y2381	6579	4.3m, 10A/230V, C13 to SI 32 (Israel) Line Cord
39Y7921	6217	2.8m, 220-240V, C13 to CEI 23-16 (Italy/Chile) Line Cord
81Y2380	6493	4.3m, 10A/230V, C13 to CEI 23-16 (Italy/Chile) Line Cord
46M2593	A1RE	2.8m, 12A/125V, C13 to JIS C-8303 (Japan) Line Cord
4L67A08362	6495	4.3m, 12A/200V, C13 to JIS C-8303 (Japan) Line Cord
39Y7926	6335	4.3m, 12A/100V, C13 to JIS C-8303 (Japan) Line Cord
39Y7922	6214	2.8m, 10A/250V, C13 to SABS 164 (S Africa) Line Cord
81Y2379	6576	4.3m, 10A/230V, C13 to SABS 164 (South Africa) Line Cord
39Y7925	6219	2.8m, 220-240V, C13 to KETI (S Korea) Line Cord
81Y2385	6494	4.3m, 12A/220V, C13 to KSC 8305 (S. Korea) Line Cord
39Y7919	6216	2.8m, 10A/250V, C13 to SEV 1011-S24507 (Swiss) Line Cord
81Y2390	6578	4.3m, 10A/230V, C13 to SEV 1011-S24507 (Sws) Line Cord
23R7158	6386	2.8m, 10A/125V, C13 to CNS 10917-3 (Taiwan) Line Cord
81Y2375	6317	2.8m, 10A/240V, C13 to CNS 10917-3 (Taiwan) Line Cord
81Y2374	6402	2.8m, 13A/125V, C13 to CNS 60799 (Taiwan) Line Cord
4L67A08363	AX8B	4.3m, 10A 125V, C13 to CNS 10917 (Taiwan) Line Cord
81Y2389	6531	4.3m, 10A/250V, C13 to 76 CNS 10917-3 (Taiwan) Line Cord
81Y2388	6530	4.3m, 13A/125V, C13 to CNS 10917 (Taiwan) Line Cord
39Y7923	6215	2.8m, 10A/250V, C13 to BS 1363/A (UK) Line Cord
81Y2377	6577	4.3m, 10A/230V, C13 to BS 1363/A (UK) Line Cord
90Y3016	6313	2.8m, 10A/120V, C13 to NEMA 5-15P (US) Line Cord
46M2592	A1RF	2.8m, 10A/250V, C13 to NEMA 6-15P Line Cord
00WH545	6401	2.8m, 13A/120V, C13 to NEMA 5-15P (US) Line Cord
4L67A08359	6370	4.3m, 10A/125V, C13 to NEMA 5-15P (US) Line Cord
4L67A08361	6373	4.3m, 10A/250V, C13 to NEMA 6-15P (US) Line Cord
4L67A08360	AX8A	4.3m, 13A/120V, C13 to NEMA 5-15P (US) Line Cord

Systems management

ST50 V2 models with Intel Xeon E processors support Intel Active Management Technology (AMT) 15.0 which provides out-of-band, hardware-based advanced system control, monitoring, alerting, and remote presence functions.

ST50 V2 models with Pentium processors support Intel Standard Manageability (ISM), which is a subset of the AMT features.

Both AMT and ISM offer the following features:

- Out-of-band management
- System health and status monitoring
- System event log and alerting
- Hardware inventory

- Boot device selection
- Remote power control
- Serial over LAN
- IDE/USB Redirect for mounting remote media

In addition, AMT supports the following feature:

- KVM (keyboard, video, mouse) redirection

Note: KVM redirection requires an Intel Xeon E processor with integrated graphics.

Health monitoring, event log, alerts, hardware inventory, boot device selection, and remote power control features are accessible out-of-band with a web browser. Serial over LAN, IDE/USB Redirect, and KVM redirection features require third-party tools that are not supplied or supported by Lenovo.

Both AMT and ISM operate independently of the server and remain operational even if the server is powered off. Out-of-band management is performed through the standard Gigabit Ethernet port, which is a shared port for data and management.

AMT and ISM support the following management protocols:

- DASH 1.1
- WS-MAN
- SNMP Platform Event Traps (PET)

Note: The ST50 V2 server does not have an XClarity Controller (XCC) management processor

For more information about Intel AMT, see the the Intel AMT Implementation and Reference Guide .

Lenovo XClarity Provisioning Manager Lite

Lenovo XClarity Provisioning Manager Lite (LXPM Lite) is a USB memory key-based application for system setup and firmware upgrades.

The software tool provides the following functions:

- Easy-to-use, language-selectable graphical interface
- Integrated help system
- Automatic hardware detection
- Ability to install an operating system and device drivers either in an unattended mode or manually
- Ability to clone the settings in one server to other similarly configured Lenovo servers
- Supports RAID setup
- Diagnostics for memory test, hard disk drive test, and RAID log collection.

The LXPM Lite user interface is shown in the following figure.

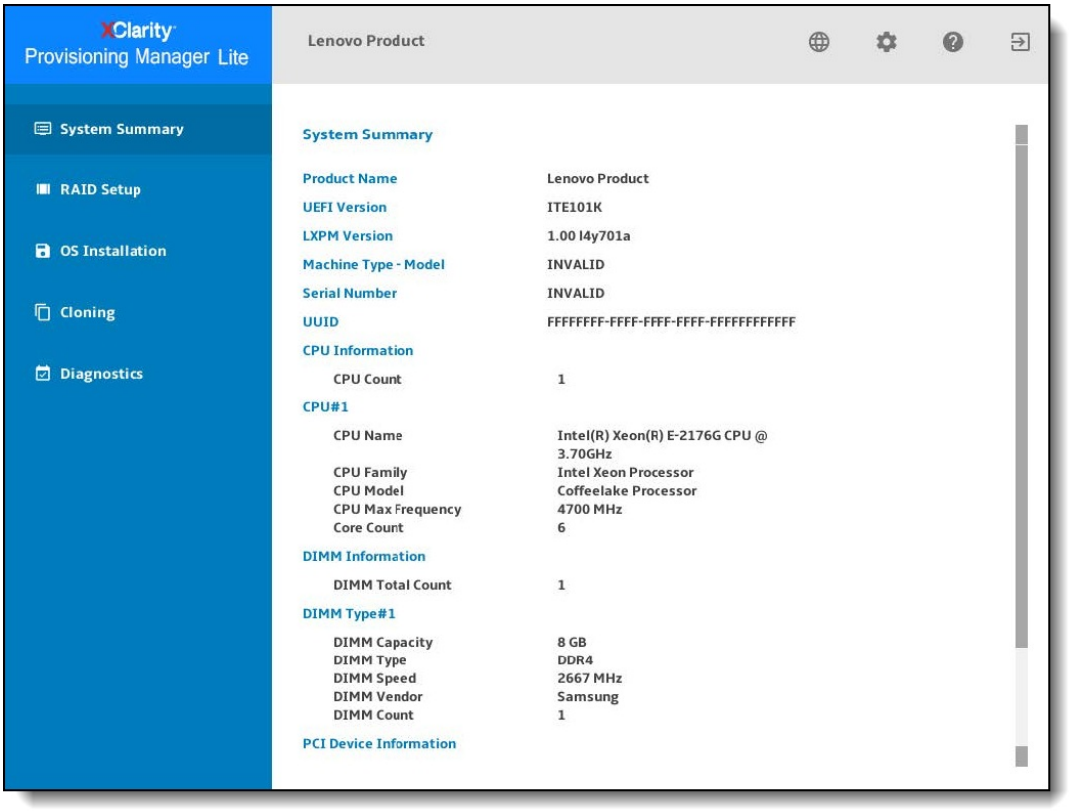

Figure 11. Lenovo XClarity Provisioning Manager Lite user interface

For more information about LXPM Lite, and to download the application, see the following support page:
https://datacentersupport.lenovo.com/us/en/solutions/HT507133

Security

The ST50 V2 offers the following security features:

- Electronic security measures:
  - Administrator and power-on passwords
  - Trusted Platform Module (TPM) supporting TPM 2.0
- Mechanical security measures
  - Loop for a padlock to prevent the side panel from being opened
  - Slot at the rear of the server for a Kensington Cable Lock
  - Optional chassis intrusion switch

The ST50 V2 is NIST 800-147 compliant.

The following table lists the security options for the server. The location of the intrusion switch is shown in the internal view of the server.

Table 33. Security features

Part number	Feature code	Description
4XF7A78616	BMET	ThinkSystem ST50 V2 Intrusion Switch Kit

Keyboards and Mice

The following table lists the supported full-sized USB keyboards and mice available for Lenovo ThinkSystem servers.

The keyboards have the following features:

- Full-sized 104-key keyboard with 3 special Windows keys
- 3 LEDs for caps lock, scroll lock and num lock
- Wired USB connection with 1.8m cable
- Adjustable feet at the rear of the keyboard

Tip: For keyboards that fit in the rack-mounted console kit, see the KVM console options section, or the ThinkSystem 18.5-inch LCD Console product guide

Table 34. Lenovo Preferred Pro USB Full-sized keyboards - ThinkSystem

Part number	Feature code	Description
Mice		
7M57A04698	B0LN	ThinkSystem Optical Wheel Mouse - USB
Keyboards		
7ZB7A05521	AXTM	ThinkSystem Pref. Pro II USB Keyboard - Arabic
7ZB7A05520	AXTN	ThinkSystem Pref. Pro II USB Keyboard - Arabic/French
7ZB7A05519	AXTP	ThinkSystem Pref. Pro II USB Keyboard - Belgium/French
7ZB7A05518	AXTQ	ThinkSystem Pref. Pro II USB Keyboard - Belgium/UK
7ZB7A05517	AXTR	ThinkSystem Pref. Pro II USB Keyboard - Brazil/Portuguese
7ZB7A05515	AXTS	ThinkSystem Pref. Pro II USB Keyboard - Bulgarian
7ZB7A05511	AXTU	ThinkSystem Pref. Pro II USB Keyboard - Czech
7ZB7A05509	AXTV	ThinkSystem Pref. Pro II USB Keyboard - Danish
7ZB7A05508	AXTW	ThinkSystem Pref. Pro II USB Keyboard - Dutch

Part number	Feature code	Description
7ZB7A05506	AXTX	ThinkSystem Pref. Pro II USB Keyboard - French
7ZB7A05496	AXTZ	ThinkSystem Pref. Pro II USB Keyboard - French Canadian French
7ZB7A05504	AXTY	ThinkSystem Pref. Pro II USB Keyboard - French Canadian Multilingual
7ZB7A05495	AXU0	ThinkSystem Pref. Pro II USB Keyboard - German
7ZB7A05494	AXU1	ThinkSystem Pref. Pro II USB Keyboard - Greek
7ZB7A05493	AXU2	ThinkSystem Pref. Pro II USB Keyboard - Hebrew
7ZB7A05492	AXU3	ThinkSystem Pref. Pro II USB Keyboard - Hungarian
7ZB7A05491	AXU4	ThinkSystem Pref. Pro II USB Keyboard - Iceland
7ZB7A05490	AXU5	ThinkSystem Pref. Pro II USB Keyboard - Italy
7ZB7A05489	AXU6	ThinkSystem Pref. Pro II USB Keyboard -Japanese
7ZB7A05488	AXU7	ThinkSystem Pref. Pro II USB Keyboard - Korean
7ZB7A05487	AXU8	ThinkSystem Pref. Pro II USB Keyboard - LA Spanish
7ZB7A05486	AXU9	ThinkSystem Pref. Pro II USB Keyboard - Norwegian
7ZB7A05485	AXUA	ThinkSystem Pref. Pro II USB Keyboard - Polish
7ZB7A05484	AXUB	ThinkSystem Pref. Pro II USB Keyboard- Portugese
7ZB7A05483	AXUC	ThinkSystem Pref. Pro II USB Keyboard - Romanian
7ZB7A05482	AXUD	ThinkSystem Pref. Pro II USB Keyboard - Russian/Cy
7ZB7A05481	AXUE	ThinkSystem Pref. Pro II USB Keyboard - Serbian/Cyrilic
7ZB7A05480	AXUF	ThinkSystem Pref. Pro II USB Keyboard - Slovak
7ZB7A05471	AXUQ	ThinkSystem Pref. Pro II USB Keyboard - Slovenian
7ZB7A05479	AXUG	ThinkSystem Pref. Pro II USB Keyboard - Spanish
7ZB7A05478	AXUH	ThinkSystem Pref. Pro II USB Keyboard- Swedish/Finn
7ZB7A05477	AXUJ	ThinkSystem Pref. Pro II USB Keyboard - Swiss, F/G
7ZB7A05476	AXUK	ThinkSystem Pref. Pro II USB Keyboard - Thailand
7ZB7A05513	AXTT	ThinkSystem Pref. Pro II USB Keyboard - Trad Chinese/US
7ZB7A05474	AXUM	ThinkSystem Pref. Pro II USB Keyboard - Turkish 179
7ZB7A05475	AXUL	ThinkSystem Pref. Pro II USB Keyboard - Turkish 440
7ZB7A05473	AXUN	ThinkSystem Pref. Pro II USB Keyboard - UK English
7ZB7A05522	AXTL	ThinkSystem Pref. Pro II USB Keyboard - US English
7ZB7A05472	AXUP	ThinkSystem Pref. Pro II USB Keyboard - US Euro

Video port adapters

The ST50 V2 has two integrated DisplayPort video ports at the back of the server. To use these ports with VGA or HDMI cables, use the dongle adapters listed in the following table.

Tip: Some models include a dongle kit. See the Models section for specifics.

Table 35. Video port dongles

Part number	Feature code	Description	Maximum supported
4X97A12099	B365	ThinkSystem DP to VGA Dongle Kit	2
4X97A12100	B366	ThinkSystem DP to HDMI Dongle Kit	2

Maximum display resolutions are as follows:

- Native DisplayPort: 3840 x 2160 pixels (4K) at a refresh rate of 60Hz
- With the DP to VGA Dongle Kit: 1920 x 1200 pixels at 60 Hz
- With the DP to HDMI Dongle Kit: 1920 x 1200 pixels at 60 Hz

Configuration requirements:

- Only one type of dongle can be used at a time. The use of one of each is not supported.
- Some Xeon processors do not support integrated graphics and the use of the DisplayPort video ports. See the Processors section for details.

Rack installation

The ST50 V2 can be installed in the rack with the Rack Mount Kit, which converts the server to a rack-mountable server.

Note: The server is a 4U rack mount server, however the rack mount kit adds 1U to the vertical space occupied by the server. The total rack space occupied is 5U.

Part number information is listed in the following table. The kit can only be ordered as an option part number, not in a CTO order.

Table 36. Rack installation options

Part number	Description
4XF7A78620	ThinkSystem ST50 V2/ST250 V2 Rack Mount Kit

The rack mount kit includes the following items:

- 1U tray to hold the server horizontally
- Left and right slide rails
- Cable management arm
- Brackets and other hardware
- Installation instructions

The following table summarizes the rail kit features and specifications.

Table 37. Rail kit features and specifications summary

Feature	ThinkSystem ST50 V2/ST250 V2 Rack Mount Kit
Option part number	4XF7A78620
Rail type	Full-out slide rail (ball bearing)
Toolless installation	Yes
CMA support	Included
Supported rack type	Four-post IBM and Lenovo standard rack, complying with the IEC standard
In-rack server maintenance	No
1U PDU support	Yes
0U PDU support	Limited support**
Supported mounting holes	Square or round
Thickness of mounting flanges	2.0 to 3.3 mm (0.08 to 0.13 inches)
Supported distance between front and rear mounting flanges‡	665 to 900 mm (26.2 to 35.4 inches)
Rail length†	792 mm (31.2 inches)

** If you want to install the rails and a 0U PDU into the same rack, the rack must meet the height and depth requirements as described in ThinkSystem Rail Support Matrix.
‡ For best performance, it is recommended that you install the rails to the racks with a 719-mm distance (28.3-inch, Lenovo rack default distance) between the front and rear mounting flanges.
† Measured when mounted on the rack, from the front surface of the front mounting flange to the rear most point of the rail. Rail is in closed position.

Operating system support

The server supports the following operating systems:

- Microsoft Windows Server 2019
- Microsoft Windows Server 2022
- Red Hat Enterprise Linux 8.4
- Red Hat Enterprise Linux 8.5
- Red Hat Enterprise Linux 8.6
- Red Hat Enterprise Linux 8.7
- Red Hat Enterprise Linux 8.8
- Red Hat Enterprise Linux 9.0
- Red Hat Enterprise Linux 9.1
- Red Hat Enterprise Linux 9.2
- SUSE Linux Enterprise Server 15 SP3
- SUSE Linux Enterprise Server 15 SP4
- SUSE Linux Enterprise Server 15 SP5
- SUSE Linux Enterprise Server 15 Xen SP3
- SUSE Linux Enterprise Server 15 Xen SP4
- SUSE Linux Enterprise Server 15 Xen SP5
- Ubuntu 22.04 LTS 64-bit
- VMware ESXi 7.0 U3
- VMware ESXi 8.0
- VMware ESXi 8.0 U1
- VMware ESXi 8.0 U2

For a complete list of supported, certified and tested operating systems, plus additional details and links to relevant web sites, see the Operating System Interoperability Guide: https://lenovopress.com/osig

Additional requirements

Additional requirements for operating systems:

- The ST50 V2 supports UEFI BIOS boot mode only; Legacy boot mode isn't supported.
- The ST50 V2 does not support ACPI S3 (Sleep) or ACPI S4 (Hibernate) modes when running Windows 10 or Windows 11.
- The onboard SATA ports of the server can be used with virtualization hypervisors, including VMware ESXi, Linux KVM, Xen, and Microsoft Hyper-V Server, however support is limited to AHCI (non-RAID) mode. RSTe mode is not supported with virtualization hypervisors.
- The DisplayPort video ports require the following:
  - Windows: Intel VGA driver is installed
  - Linux: kernel/boot parameter "nomodeset" is added

ESXi preloads

For configure-to-order (CTO) configurations, the server can be preloaded with VMware ESXi installed on an M.2 drive. Ordering information is listed in the following table.

Table 38. VMware ESXi preload

Part number	Feature code	Description
CTO only	BMEY	VMware ESXi 7.0 U3 (Factory Installed)
CTO only	BQ8S	VMware ESXi 8.0 U1 (Factory Installed)

Physical and electrical specifications

The ST50 V2 has the following overall physical dimensions, including tower feet, excluding components that extend outside the standard chassis, such as power supply handles:

- Width: 170 mm (6.7 inches)
- Height: 376 mm (14.8 inches)
- Depth: 316 mm (12.4 inches)

The following table lists the detailed dimensions. See the figure below for the definition of each dimension.

Table 39. Detailed dimensions

Dimension	Description
170 mm	X_a = Width, using widest features (not including feet)
132 mm	X_b = Width, between the outer edges of the feet
376 mm	Y_a = Height, from bottom of feet to top of chassis body
370 mm	Y_b = Height, from bottom of chassis body to top of chassis body
299 mm	Z_a = Depth, from front door to most rearward I/O port surface
316 mm	Z_b = Depth, from front door to deepest feature of the chassis body feature
316 mm	Z_c = Depth, from front door to deepest feature such as power supply handle
37 mm	Z_e = Depth, front door to front plate of chassis body

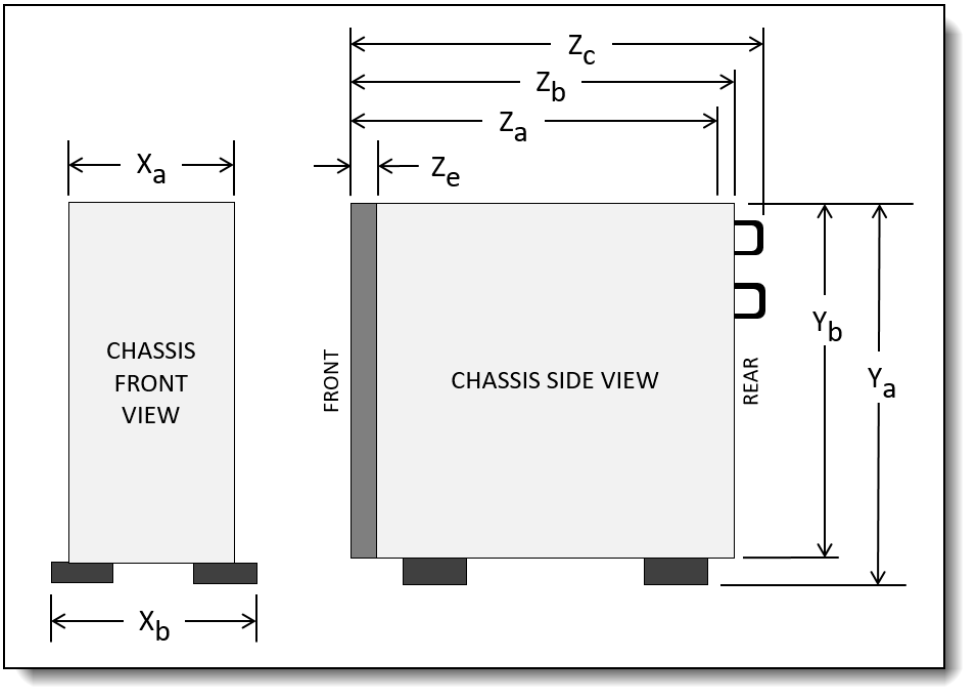

Figure 12. Server dimension

The shipping dimensions (cardboard packaging) of the ST50 V2 are as follows:

- Width: 280 mm (11.0 inches)
- Height: 540 mm (21.3 inches)
- Depth: 420 mm (16.5 inches)

The server has the following weight:

- Maximum: 9.4 kg (20.7 lb)

Electrical requirements are as follows:

- Chassis with 300W power supply:
  - 100-127 (nominal) V ac; 50 Hz or 60 Hz; 3.88 A
  - 200-240 (nominal) V ac; 50 Hz or 60 Hz; 1.69 A
  - Input kilovolt-amperes (kVA): 0.365 kVA (maximum configuration)
- Chassis with 500W power supply:
  - 100-127 (nominal) V ac; 50 Hz or 60 Hz; 6.13 A
  - 200-240 (nominal) V ac; 50 Hz or 60 Hz; 2.70 A
  - Input kilovolt-amperes (kVA): 0.619 kVA (maximum configuration)

Operating environment

The ST50 V2 server complies with ASHRAE Class A2 specifications.

Temperature and humidity

The server is supported in the following environment:

- Air temperature:
  - Operating:
    - ASHRAE Class A2: 10°C to 35°C (50°F to 95°F); the maximum ambient temperature decreases by 1°C for every 300 m (984 ft) increase in altitude above 900 m (2,953 ft).
  - Server off: 5°C to 45°C (41°F to 113°F)
  - Shipment/storage: -20°C to 60°C (-4°F to 140°F)
- Maximum altitude: 3,050 m (10,000 ft), derated 1°C per 300 m above 950 m
- Relative Humidity (non-condensing):
  - Operating
    - ASHRAE Class A2: 8% to 80%; maximum dew point: 21°C (70°F)
  - Shipment/storage: 8% to 90%

Acoustic noise emissions

The server has the following acoustic noise emissions declaration:

- Sound power level (L_{WAd}):
  - Idling: Typical: 3.5 Bel, Maximum: 5.0 Bel
  - Operating: Typical: 5.4 Bel, Maximum: 5.4 Bel
- Sound pressure level (L_{pAm}):
  - Idling: Typical: 25 dBA, Maximum: 37 dBA
  - Operating: Typical: 40 dBA, Maximum: 40 dBA

Note:

- These sound levels were measured in controlled acoustical environments according to procedures specified by ISO 7779 and are reported in accordance with ISO 9296.
- The declared acoustic sound levels are based on the following configurations, which may change depending on configuration/conditions:
  - Typical: 1x 80W CPU, 4x 32GB DIMM, 2x HDD or SSD, 1x 960G M.2, RAID 5350-8i, 1x 300W PSU
  - Maximum: 1x 95W CPU, 4x 32GB DIMM, 2x HDD or SSD, 1x 960G M.2, 1x T1000GPU, 1x 500W PSU

Heat output

The server generates the following heat:

- Heat/thermal output:
  - Minimum configuration: 443 BTU/hr, 130 W
  - Maximum configuration: 754 BTU/hr, 221 W

Shock and vibration

The server has the following vibration and shock limits:

- Vibration:
  - Operating: 0.21 G rms at 5 Hz to 500 Hz for 15 minutes across 3 axes
  - Non-operating: 1.04 G rms at 2 Hz to 200 Hz for 15 minutes across 6 surfaces
- Shock:
  - Operating: 15 G for 3 milliseconds in each direction (positive and negative X, Y, and Z axes)
  - Non-operating:
    - 4 kg - 11 kg: 50 G for 167 in./sec velocity change across 6 surfaces

Particulate contamination

Airborne particulates (including metal flakes or particles) and reactive gases acting alone or in combination with other environmental factors such as humidity or temperature might damage the system that might cause the system to malfunction or stop working altogether.

The following specifications indicate the limits of particulates that the system can tolerate:

- Reactive gases:
  - The reactivity rate of copper coupons shall be less than 200 Angstroms per month (Å/month)
  - The reactivity rate of silver coupons shall be less than 200 Å/month
- Airborne particulates:
  - The room air should be continuously filtered with MERV 8 filters.
  - Air entering a data center should be filtered with MERV 11 or preferably MERV 13 filters.
  - The deliquescent relative humidity of the particulate contamination should be more than 60% RH
  - Data centers must be free of zinc whiskers

For additional information, see the Specifications section of the Setup Guide for the server, available from the Lenovo Documents site, https://pubs.lenovo.com/

Warranty and Support

The ST50 V2 has a 1-year or 3-year warranty, based on the machine type of the system:

- 7D8K - 1 year warranty
- 7D8J - 3 year warranty

The standard warranty terms are customer-replaceable unit (CRU) and onsite (for field-replaceable units FRUs only) with standard call center support during normal business hours and 9x5 Next Business Day Parts Delivered.

Lenovo’s additional support services provide a sophisticated, unified support structure for your data center, with an experience consistently ranked number one in customer satisfaction worldwide. Available offerings include:

- **Premier Support**

  Premier Support provides a Lenovo-owned customer experience and delivers direct access to technicians skilled in hardware, software, and advanced troubleshooting, in addition to tjhe following:

  - Direct technician-to-technician access through a dedicated phone line
  - 24x7x365 remote support
  - Single point of contact service
  - End to end case management
  - Third-party collaborative software support
  - Online case tools and live chat support
  - On-demand remote system analysis

- **Warranty Upgrade (Preconfigured Support)**

  Services are available to meet the on-site response time targets that match the criticality of your systems.

  - 3, 4, or 5 years of service coverage
  - **Foundation Service**: 9x5 service coverage with next business day onsite response. YourDrive YourData is an optional extra (see below).
  - **Essential Service:** 24x7 service coverage with 4-hour onsite response or 24-hour committed repair (available only in select markets). Bundled with YourDrive YourData.
  - **Advanced Service:** 24x7 service coverage with 2-hour onsite response or 6-hour committed repair (available only in select markets). Bundled with YourDrive YourData.

- **Managed Services**

  Lenovo Managed Services provides continuous 24x7 remote monitoring (plus 24x7 call center availability) and proactive management of your data center using state-of-the-art tools, systems, and practices by a team of highly skilled and experienced Lenovo services professionals.

  Quarterly reviews check error logs, verify firmware & OS device driver levels, and software as needed. We'll also maintain records of latest patches, critical updates, and firmware levels, to ensure you systems are providing business value through optimized performance.

- **Technical Account Management (TAM)**

  A Lenovo Technical Account Manager helps you optimize the operation of your data center based on a deep understanding of your business. You gain direct access to your Lenovo TAM, who serves as your single point of contact to expedite service requests, provide status updates, and furnish reports to track incidents over time. In addition, your TAM will help proactively make service recommendations and manage your service relationship with Lenovo to make certain your needs are met.

- **Enterprise Server Software Support**

  Enterprise Software Support is an additional support service providing customers with software support on Microsoft, Red Hat, SUSE, and VMware applications and systems. Around the clock availability for critical problems plus unlimited calls and incidents helps customers address challenges fast, without incremental costs. Support staff can answer troubleshooting and diagnostic questions, address product comparability and interoperability issues, isolate causes of problems, report defects to software vendors, and more.

- **YourDrive YourData**

  Lenovo's YourDrive YourData is a multi-drive retention offering that ensures your data is always under your control, regardless of the number of drives that are installed in your Lenovo server. In the unlikely event of a drive failure, you retain possession of your drive while Lenovo replaces the failed drive part. Your data stays safely on your premises, in your hands. The YourDrive YourData service can be purchased in convenient bundles and is optional with Foundation Service. It is bundled with Essential Service and Advanced Service.

- **Health Check**

  Having a trusted partner who can perform regular and detailed health checks is central to maintaining efficiency and ensuring that your systems and business are always running at their best. Health Check supports Lenovo-branded server, storage, and networking devices, as well as select Lenovo-supported products from other vendors that are sold by Lenovo or a Lenovo-Authorized Reseller.

Examples of region-specific warranty terms are second or longer business day parts delivery or parts-only base warranty.

If warranty terms and conditions include onsite labor for repair or replacement of parts, Lenovo will dispatch a service technician to the customer site to perform the replacement. Onsite labor under base warranty is limited to labor for replacement of parts that have been determined to be field-replaceable units (FRUs). Parts that are determined to be customer-replaceable units (CRUs) do not include onsite labor under base warranty.

If warranty terms include parts-only base warranty, Lenovo is responsible for delivering only replacement parts that are under base warranty (including FRUs) that will be sent to a requested location for self-service. Parts-only service does not include a service technician being dispatched onsite. Parts must be changed at customer's own cost and labor and defective parts must be returned following the instructions supplied with the spare parts.

Lenovo Service offerings are region-specific. Not all preconfigured support and upgrade options are available in every region. For information about Lenovo service upgrade offerings that are available in your region, refer to the following resources:

- Service part numbers in Lenovo Data Center Solution Configurator (DCSC):
  http://dcsc.lenovo.com/#/services
- Lenovo Services Availability Locator
  http://lenovolocator.com/

For service definitions, region-specific details, and service limitations, please refer to the following documents:

- Lenovo Statement of Limited Warranty for Infrastructure Solutions Group (ISG) Servers and System Storage
  http://pcsupport.lenovo.com/us/en/solutions/ht503310
- Lenovo Data Center Services Agreement
  http://support.lenovo.com/us/en/solutions/ht116628

Services

Lenovo Services is a dedicated partner to your success. Our goal is to reduce your capital outlays, mitigate your IT risks, and accelerate your time to productivity.

Note: Some service options may not be available in all markets or regions. For more information, go to https://www.lenovo.com/services. For information about Lenovo service upgrade offerings that are available in your region, contact your local Lenovo sales representative or business partner.

Here's a more in-depth look at what we can do for you:

- **Asset Recovery Services**

  Asset Recovery Services (ARS) helps customers recover the maximum value from their end-of-life equipment in a cost-effective and secure way. On top of simplifying the transition from old to new equipment, ARS mitigates environmental and data security risks associated with data center equipment disposal. Lenovo ARS is a cash-back solution for equipment based on its remaining market value, yielding maximum value from aging assets and lowering total cost of ownership for your customers. For more information, see the ARS page, https://lenovopress.com/lp1266-reduce-e-waste-and-grow-your-bottom-line-with-lenovo-ars.

- **Assessment Services**

  An Assessment helps solve your IT challenges through an onsite, multi-day session with a Lenovo technology expert. We perform a tools-based assessment which provides a comprehensive and thorough review of a company's environment and technology systems. In addition to the technology based functional requirements, the consultant also discusses and records the non-functional business requirements, challenges, and constraints. Assessments help organizations like yours, no matter how large or small, get a better return on your IT investment and overcome challenges in the ever-changing technology landscape.

- **Design Services**

  Professional Services consultants perform infrastructure design and implementation planning to support your strategy. The high-level architectures provided by the assessment service are turned into low level designs and wiring diagrams, which are reviewed and approved prior to implementation. The implementation plan will demonstrate an outcome-based proposal to provide business capabilities through infrastructure with a risk-mitigated project plan.

- **Basic Hardware Installation**

  Lenovo experts can seamlessly manage the physical installation of your server, storage, or networking hardware. Working at a time convenient for you (business hours or off shift), the technician will unpack and inspect the systems on your site, install options, mount in a rack cabinet, connect to power and network, check and update firmware to the latest levels, verify operation, and dispose of the packaging, allowing your team to focus on other priorities.

- **Deployment Services**

  When investing in new IT infrastructures, you need to ensure your business will see quick time to value with little to no disruption. Lenovo deployments are designed by development and engineering teams who know our Products & Solutions better than anyone else, and our technicians own the process from delivery to completion. Lenovo will conduct remote preparation and planning, configure & integrate systems, validate systems, verify and update appliance firmware, train on administrative tasks, and provide post-deployment documentation. Customer’s IT teams leverage our skills to enable IT staff to transform with higher level roles and tasks.

- **Integration, Migration, and Expansion Services**

  Move existing physical & virtual workloads easily, or determine technical requirements to support increased workloads while maximizing performance. Includes tuning, validation, and documenting ongoing run processes. Leverage migration assessment planning documents to perform necessary migrations.

Regulatory compliance

The ST50 V2 conforms to the following standards:

- ANSI/UL 62368-1
- IEC 62368-1 (CB Certificate and CB Test Report)
- FCC - Verified to comply with Part 15 of the FCC Rules, Class A
- Canada ICES-003, issue 7, Class A
- CSA C22.2 No. 62368-1
- CISPR 32, Class A, CISPR 35
- Argentina IEC 60950-1
- Japan VCCI, Class A
- Taiwan BSMI CNS13438, Class A; CNS14336-1; Section 5 of CNS15663
- CE, UKCA Mark (EN55032 Class A, EN62368-1, EN55024, EN55035, EN61000-3-2, EN61000-3-3, (EU) 2019/424, and EN50581-1 (RoHS))
- Korea KN32, Class A, KN35
- Russia, Belorussia and Kazakhstan, TP EAC 037/2016 (for RoHS)
- Russia, Belorussia and Kazakhstan, EAC: TP TC 004/2011 (for Safety); TP TC 020/2011 (for EMC)
- Australia/New Zealand AS/NZS CISPR 32, Class A; AS/NZS 62368.1
- UL Green Guard, UL2819
- China CCC certificate, GB17625.1; GB4943.1; GB/T9254
- China CECP certificate, CQC3135
- China CELP certificate, HJ 2507-2011
- Japanese Energy-Saving Act
- Mexico NOM-019
- TUV-GS (EN62368-1, and EK1-ITB2000)
- India BIS 13252 (Part 1)
- Germany GS
- Brazil INMETRO
- South Africa NRCS LOA
- Ukraine UkrCEPRO
- Morocco CMIM Certification (CM)
- EU2019/424 Energy Related Product (ErP Lot9)

External backup units

The following table lists the external RDX backup options available.

Table 40. External RDX dock and cartridges

Part number	Feature code	Description
External RDX docks		
4T27A10725	B32R	ThinkSystem RDX External USB 3.0 Dock (No cartridge included with the drive)
Cartridges		
7TP7A01601	AVF8	ThinkSystem RDX 500GB Cartridge
7TP7A01602	AVF1	ThinkSystem RDX 1TB Cartridge
7TP7A01603	AVF0	ThinkSystem RDX 2TB Cartridge
7TP7A04318	AXD1	ThinkSystem RDX 4TB Cartridge

For more information, see the Lenovo RDX USB 3.0 Disk Backup Solution product guide:
https://lenovopress.com/tips0894-rdx-usb-30

Uninterruptible power supply units

The following table lists the uninterruptible power supply (UPS) units that are offered by Lenovo.

Table 41. Uninterruptible power supply units

Part number	Description
Tower UPS units	
55951AX	T1kVA Tower UPS (100-125VAC)
55951KX	T1kVA Tower UPS (200-240VAC)
55952AX	T1.5kVA Tower UPS (100-125VAC)
55952KX	T1.5kVA Tower UPS (200-240VAC)
Rack-mounted or tower UPS units	
55941AX	RT1.5kVA 2U Rack or Tower UPS (100-125VAC)
55941KX	RT1.5kVA 2U Rack or Tower UPS (200-240VAC)
55942AX	RT2.2kVA 2U Rack or Tower UPS (100-125VAC)
55942KX	RT2.2kVA 2U Rack or Tower UPS (200-240VAC)
55943AX	RT3kVA 2U Rack or Tower UPS (100-125VAC)
55943KX	RT3kVA 2U Rack or Tower UPS (200-240VAC)
55945KX	RT5kVA 3U Rack or Tower UPS (200-240VAC)
55946KX	RT6kVA 3U Rack or Tower UPS (200-240VAC)
55948KX	RT8kVA 6U Rack or Tower UPS (200-240VAC)
55949KX	RT11kVA 6U Rack or Tower UPS (200-240VAC)
55948PX	RT8kVA 6U 3:1 Phase Rack or Tower UPS (380-415VAC)
55949PX	RT11kVA 6U 3:1 Phase Rack or Tower UPS (380-415VAC)
Rack-mounted UPS units	
55943KT†	ThinkSystem RT3kVA 2U Standard UPS (200-230VAC) (2x C13 10A, 2x GB 10A, 1x C19 16A outlets)
55943LT†	ThinkSystem RT3kVA 2U Long Backup UPS (200-230VAC) (2x C13 10A, 2x GB 10A, 1x C19 16A outlets)
55946KT†	ThinkSystem RT6kVA 5U UPS (200-230VAC) (2x C13 10A outlets, 1x Terminal Block output)
5594XKT†	ThinkSystem RT10kVA 5U UPS (200-230VAC) (2x C13 10A outlets, 1x Terminal Block output)

† Only available in China and the Asia Pacific market.

For more information, see the list of Product Guides in the UPS category:
https://lenovopress.com/servers/options/ups

Power distribution units

The following table lists the power distribution units (PDUs) that are offered by Lenovo.

Table 42. Power distribution units

Part number	Feature code	Description	ANZ	ASEAN	Brazil	EET	MEA	RUCIS	WE	HTK	INDIA	JAPAN	LA	NA	PRC
0U Basic PDUs															
00YJ776	ATZY	0U 36 C13/6 C19 24A 1 Phase PDU	N	Y	Y	N	N	N	N	N	N	Y	Y	Y	N

Part number	Feature code	Description	ANZ	ASEAN	Brazil	EET	MEA	RUCIS	WE	HTK	INDIA	JAPAN	LA	NA	PRC
00YJ777	ATZZ	0U 36 C13/6 C19 32A 1 Phase PDU	Y	Y	N	Y	Y	Y	Y	Y	Y	N	N	Y	Y
0U Switched and Monitored PDUs															
00YJ783	AU04	0U 12 C13/12 C19 Switched and Monitored 48A 3 Phase PDU	N	N	Y	N	N	N	Y	N	N	Y	Y	Y	N
00YJ781	AU03	0U 20 C13/4 C19 Switched and Monitored 24A 1 Phase PDU	N	N	Y	N	Y	N	Y	N	N	Y	Y	Y	N
1U Switched and Monitored PDUs															
4PU7A81117	BNDV	1U 18 C19/C13 switched and monitored 48A 3P WYE PDU - ETL	N	N	N	N	N	N	N	N	N	N	N	Y	N
4PU7A77467	BLC4	1U 18 C19/C13 Switched and Monitored 80A 3P Delta PDU	N	N	N	N	N	N	N	N	N	Y	N	Y	N
4PU7A77469	BLC6	1U 12 C19/C13 switched and monitored 60A 3P Delta PDU	N	N	N	N	N	N	N	N	N	N	N	Y	N
4PU7A77468	BLC5	1U 12 C19/C13 switched and monitored 32A 3P WYE PDU	Y	Y	Y	Y	Y	Y	Y	Y	Y	N	Y	Y	Y
4PU7A81118	BNDW	1U 18 C19/C13 switched and monitored 48A 3P WYE PDU - CE	Y	Y	Y	Y	Y	Y	Y	Y	Y	N	Y	N	Y
1U Ultra Density Enterprise PDUs (9x IEC 320 C13 + 3x IEC 320 C19 outlets)															
71763NU	6051	Ultra Density Enterprise C19/C13 PDU 60A/208V/3PH	N	N	Y	N	N	N	N	N	N	Y	Y	Y	N
71762NX	6091	Ultra Density Enterprise C19/C13 PDU Module	Y	Y	Y	Y	Y	Y	Y	Y	Y	Y	Y	Y	Y
1U C13 Enterprise PDUs (12x IEC 320 C13 outlets)															
39Y8941	6010	DPI C13 Enterprise PDU Module (WW)	Y	Y	Y	Y	Y	Y	Y	Y	Y	Y	Y	Y	Y
1U Front-end PDUs (3x IEC 320 C19 outlets)															
39Y8938	6002	DPI Single-phase 30A/120V Front-end PDU (US)	Y	Y	Y	Y	Y	Y	Y	Y	Y	Y	Y	Y	Y
39Y8939	6003	DPI Single-phase 30A/208V Front-end PDU (US)	Y	Y	Y	Y	Y	Y	Y	Y	Y	Y	Y	Y	Y
39Y8934	6005	DPI Single-phase 32A/230V Front-end PDU (International)	Y	Y	Y	Y	Y	Y	Y	Y	Y	Y	Y	Y	Y
39Y8940	6004	DPI Single-phase 60A/208V Front-end PDU (US)	Y	N	Y	Y	Y	Y	Y	N	N	Y	Y	Y	N
39Y8935	6006	DPI Single-phase 63A/230V Front-end PDU (International)	Y	Y	Y	Y	Y	Y	Y	Y	Y	Y	Y	Y	Y
1U NEMA PDUs (6x NEMA 5-15R outlets)															
39Y8905	5900	DPI 100-127V NEMA PDU	Y	Y	Y	Y	Y	Y	Y	Y	Y	Y	Y	Y	Y
Line cords for 1U PDUs that ship without a line cord															
40K9611	6504	4.3m, 32A/380-415V, EPDU/IEC 309 3P+N+G 3ph wye (non-US) Line Cord	Y	Y	Y	Y	Y	Y	Y	Y	Y	Y	Y	Y	Y
40K9612	6502	4.3m, 32A/230V, EPDU to IEC 309 P+N+G (non-US) Line Cord	Y	Y	Y	Y	Y	Y	Y	Y	Y	Y	Y	Y	Y
40K9613	6503	4.3m, 63A/230V, EPDU to IEC 309 P+N+G (non-US) Line Cord	Y	Y	Y	Y	Y	Y	Y	Y	Y	Y	Y	Y	Y

Part number	Feature code	Description	ANZ	ASEAN	Brazil	EET	MEA	RUCIS	WE	HTK	INDIA	JAPAN	LA	NA	PRC
40K9614	6500	4.3m, 30A/208V, EPDU to NEMA L6-30P (US) Line Cord	Y	Y	Y	Y	Y	Y	Y	Y	Y	Y	Y	Y	Y
40K9615	6501	4.3m, 60A/208V, EPDU to IEC 309 2P+G (US) Line Cord	N	N	Y	N	N	N	Y	N	N	Y	Y	Y	N
40K9617	6505	4.3m, 32A/230V, Souriau UTG Female to AS/NZ 3112 (Aus/NZ) Line Cord	Y	Y	Y	Y	Y	Y	Y	Y	Y	Y	Y	Y	Y
40K9618	6506	4.3m, 32A/250V, Souriau UTG Female to KSC 8305 (S. Korea) Line Cord	Y	Y	Y	Y	Y	Y	Y	Y	Y	Y	Y	Y	Y

For more information, see the Lenovo Press documents in the PDU category:
https://lenovopress.com/servers/options/pdu

Rack cabinets

The ST50 V2 server can be installed horizontally in a rack cabinet using the Rack Mount Kit, as described in the Rack installation section.

The following table lists the supported rack cabinets.

Table 43. Rack cabinets

Part number	Description
93072RX	25U Standard Rack (1000mm)
93072PX	25U Static S2 Standard Rack (1000mm)
7D6DA007WW	ThinkSystem 42U Onyx Primary Heavy Duty Rack Cabinet (1200mm)
7D6DA008WW	ThinkSystem 42U Pearl Primary Heavy Duty Rack Cabinet (1200mm)
93604PX	42U 1200mm Deep Dynamic Rack
93614PX	42U 1200mm Deep Static Rack
93634PX	42U 1100mm Dynamic Rack
93634EX	42U 1100mm Dynamic Expansion Rack
93074RX	42U Standard Rack (1000mm)
7D6EA009WW	ThinkSystem 48U Onyx Primary Heavy Duty Rack Cabinet (1200mm)
7D6EA00AWW	ThinkSystem 48U Pearl Primary Heavy Duty Rack Cabinet (1200mm)

For specifications about these racks, see the Lenovo Rack Cabinet Reference, available from:
https://lenovopress.com/lp1287-lenovo-rack-cabinet-reference

For more information, see the list of Product Guides in the Rack cabinets category:
https://lenovopress.com/servers/options/racks

KVM console options

The following table lists the supported KVM consoles.

Table 44. KVM console

Part number	Description
4XF7A84188	ThinkSystem 18.5" LCD Console (with US English keyboard)

The following table lists the available KVM switches and the options that are supported with them.

Table 46. KVM switches and options

Part number	Description
KVM Console switches	
1754D2X	Global 4x2x32 Console Manager (GCM32)
1754D1X	Global 2x2x16 Console Manager (GCM16)
1754A2X	Local 2x16 Console Manager (LCM16)
1754A1X	Local 1x8 Console Manager (LCM8)
Cables for GCM and LCM Console switches	
46M5383	Virtual Media Conversion Option Gen2 (VCO2)
46M5382	Serial Conversion Option (SCO)

For more information, see the list of Product Guides in the KVM Switches and Consoles category:
http://lenovopress.com/servers/options/kvm

Lenovo Financial Services

Lenovo Financial Services reinforces Lenovo's commitment to deliver pioneering products and services that are recognized for their quality, excellence, and trustworthiness. Lenovo Financial Services offers financing solutions and services that complement your technology solution anywhere in the world.

We are dedicated to delivering a positive finance experience for customers like you who want to maximize your purchase power by obtaining the technology you need today, protect against technology obsolescence, and preserve your capital for other uses.

We work with businesses, non-profit organizations, governments and educational institutions to finance their entire technology solution. We focus on making it easy to do business with us. Our highly experienced team of finance professionals operates in a work culture that emphasizes the importance of providing outstanding customer service. Our systems, processes and flexible policies support our goal of providing customers with a positive experience.

We finance your entire solution. Unlike others, we allow you to bundle everything you need from hardware and software to service contracts, installation costs, training fees, and sales tax. If you decide weeks or months later to add to your solution, we can consolidate everything into a single invoice.

Our Premier Client services provide large accounts with special handling services to ensure these complex transactions are serviced properly. As a premier client, you have a dedicated finance specialist who manages your account through its life, from first invoice through asset return or purchase. This specialist develops an in-depth understanding of your invoice and payment requirements. For you, this dedication provides a high-quality, easy, and positive financing experience.

For your region-specific offers, please ask your Lenovo sales representative or your technology provider about the use of Lenovo Financial Services. For more information, see the following Lenovo website:

https://www.lenovo.com/us/en/landingpage/lenovo-financial-services/

Related publications and links

For more information, see these resources:

- ThinkSystem ST50 V2 product page
  https://www.lenovo.com/us/en/p/data-center/servers/towers/thinksystem-st50-v2/len21ts0004
- ThinkSystem ST50 V2 interactive 3D tour
  https://lenovopress.com/lp1568-3d-tour-thinksystem-st50-v2
- ThinkSystem ST50 V2 drivers and support
  http://datacentersupport.lenovo.com/products/servers/thinksystem/st50v2/7d8j/downloads
- ThinkSystem ST50 V2 product publications:
  http://thinksystem.lenovofiles.com/help/index.jsp
  - Quick Start
  - Tower-to-Rack Conversion Kit Installation Instructions
  - Setup Guide
  - Maintenance Manual
  - Lenovo XClarity Provisioning Manager Lite User Guide
- ServerProven hardware compatibility:
  http://www.lenovo.com/us/en/serverproven

Related product families

Product families related to this document are the following:

- 1-Socket Tower Servers
- ThinkSystem ST50 V2 Server

Notices

Lenovo may not offer the products, services, or features discussed in this document in all countries. Consult your local Lenovo representative for information on the products and services currently available in your area. Any reference to a Lenovo product, program, or service is not intended to state or imply that only that Lenovo product, program, or service may be used. Any functionally equivalent product, program, or service that does not infringe any Lenovo intellectual property right may be used instead. However, it is the user's responsibility to evaluate and verify the operation of any other product, program, or service. Lenovo may have patents or pending patent applications covering subject matter described in this document. The furnishing of this document does not give you any license to these patents. You can send license inquiries, in writing, to:

Lenovo (United States), Inc.
8001 Development Drive
Morrisville, NC 27560
U.S.A.
Attention: Lenovo Director of Licensing

LENOVO PROVIDES THIS PUBLICATION ”AS IS” WITHOUT WARRANTY OF ANY KIND, EITHER EXPRESS OR IMPLIED, INCLUDING, BUT NOT LIMITED TO, THE IMPLIED WARRANTIES OF NON-INFRINGEMENT, MERCHANTABILITY OR FITNESS FOR A PARTICULAR PURPOSE. Some jurisdictions do not allow disclaimer of express or implied warranties in certain transactions, therefore, this statement may not apply to you.

This information could include technical inaccuracies or typographical errors. Changes are periodically made to the information herein; these changes will be incorporated in new editions of the publication. Lenovo may make improvements and/or changes in the product(s) and/or the program(s) described in this publication at any time without notice.

The products described in this document are not intended for use in implantation or other life support applications where malfunction may result in injury or death to persons. The information contained in this document does not affect or change Lenovo product specifications or warranties. Nothing in this document shall operate as an express or implied license or indemnity under the intellectual property rights of Lenovo or third parties. All information contained in this document was obtained in specific environments and is presented as an illustration. The result obtained in other operating environments may vary. Lenovo may use or distribute any of the information you supply in any way it believes appropriate without incurring any obligation to you.

Any references in this publication to non-Lenovo Web sites are provided for convenience only and do not in any manner serve as an endorsement of those Web sites. The materials at those Web sites are not part of the materials for this Lenovo product, and use of those Web sites is at your own risk. Any performance data contained herein was determined in a controlled environment. Therefore, the result obtained in other operating environments may vary significantly. Some measurements may have been made on development-level systems and there is no guarantee that these measurements will be the same on generally available systems. Furthermore, some measurements may have been estimated through extrapolation. Actual results may vary. Users of this document should verify the applicable data for their specific environment.

© Copyright Lenovo 2023. All rights reserved.

This document, LP1547, was created or updated on October 9, 2023.

Send us your comments in one of the following ways:

- Use the online Contact us review form found at:
  https://lenovopress.lenovo.com/LP1547
- Send your comments in an e-mail to:
  comments@lenovopress.com

This document is available online at https://lenovopress.lenovo.com/LP1547.

Trademarks

Lenovo and the Lenovo logo are trademarks or registered trademarks of Lenovo in the United States, other countries, or both. A current list of Lenovo trademarks is available on the Web at https://www.lenovo.com/us/en/legal/copytrade/.

The following terms are trademarks of Lenovo in the United States, other countries, or both:
Lenovo®
Lenovo Services
ServerProven®
System x®
ThinkSystem®
TopSeller
TruDDR4
XClarity®

The following terms are trademarks of other companies:

Intel®, Celeron®, Xeon®, and Pentium® are trademarks of Intel Corporation or its subsidiaries.

Linux® is the trademark of Linus Torvalds in the U.S. and other countries.

Hyper-V®, Microsoft®, Windows Server®, and Windows® are trademarks of Microsoft Corporation in the United States, other countries, or both.

Other company, product, or service names may be trademarks or service marks of others.