Lenovo

ThinkSystem SR860 V4
User Guide



Machine Type: 7DJN, 7DJR, and 7DJQ

Note

Before using this information and the product it supports, be sure to read and understand the safety information and the safety instructions, which are available at:
https://pubs.lenovo.com/safety_documentation/

In addition, be sure that you are familiar with the terms and conditions of the Lenovo warranty for your server, which can be found at:
http://datacentersupport.lenovo.com/warrantylookup

First Edition (September 2025)

© Copyright Lenovo 2025.

LIMITED AND RESTRICTED RIGHTS NOTICE: If data or software is delivered pursuant to a General Services Administration (GSA) contract, use, reproduction, or disclosure is subject to restrictions set forth in Contract No. GS-35F-05925.

Contents

Contents i

Safety v

Safety inspection checklist vi

Chapter 1. Introduction 1

Features. 1

Tech Tips 2

Security advisories 3

Specifications 3

Technical specifications. 3

Mechanical specifications 8

Environmental specifications 8

Management options. 14

Chapter 2. Server components 19

Front view 19

Front view of the sever model with 2.5-inch bays 19

Front view of the sever model with E3.S 1T bays 22

Front view of the sever model with E3.S 2T bays 25

Rear view 28

Rear LEDs 30

Top view 31

System-board-assembly layout 32

System-board-assembly connectors. 33

System-board-assembly switches. 35

System LEDs and diagnostics display 36

Chapter 3. Parts list 37

Power cords 39

Chapter 4. Unboxing and setup 41

Server package contents 41

Identify the server and access the Lenovo XClarity Controller 41

Server setup checklist 43

Chapter 5. Hardware replacement procedures 45

Installation Guidelines 45

Safety inspection checklist. 46

System reliability guidelines 47

Working inside the server with the power on . . 48

Handling static-sensitive devices 48

Memory module installation rules and order 48

RDIMM independent memory mode installation order 50

RDIMM memory mirroring mode installation order 54

RDIMM and CMM installation order 55

Drive backplane installation rules and order 56

PCIe riser and adapter installation rules and order 58

Power on and power off the server 60

Power on the server 60

Power off the server 61

Rail replacement 61

Remove the rails from the rack (2.5-inch bay chassis) 61

Install the rail kit to the rack (2.5-inch bay chassis) 62

Remove the rails from the rack (E3.S bay chassis) 64

Install the rails from the rack (E3.S bay chassis) 65

Server replacement 67

Remove the server from the rack (2.5-inch bay chassis) 68

Install the server to the rack (2.5-inch bay chassis) 74

Remove the server from the rack (E3.S bay chassis) 82

Install the server to the rack (E3.S bay chassis) 89

2.5-inch hot-swap drive replacement 97

Remove a 2.5-inch hot-swap drive 97

Install a 2.5-inch hot-swap drive 98

2.5-inch drive backplane replacement 100

Remove a 2.5-inch drive backplane 100

Install a 2.5-inch drive backplane 103

Air baffle replacement 107

Remove the front air baffle 107

Install the front air baffle 109

Remove the rear air baffle 112

Install the rear air baffle 115

CMOS battery (CR2032) replacement 118

Remove the CMOS battery (CR2032) 118

Install the CMOS battery (CR2032) 122

Crossbar replacement 125

Remove the crossbar 125

Install the crossbar 128

E3.S hot-swap drive replacement 131

Remove an E3.S hot-swap drive 131

© Copyright Lenovo 2025

Install an E3.S hot-swap drive 133
E3.S drive cage and backplane replacement . . . 137
Remove an E3.S drive cage and backplane 137
Install an E3.S drive cage and backplane . . . 139
E3.S non-hot-swap CMM replacement 140
Remove an E3.S non-hot-swap CMM 140
Install an E3.S non-hot-swap CMM 143
E3.S CMM cage and backplane replacement . . . 146
Remove an E3.S CMM cage and backplane 146
Install an E3.S CMM cage and backplane . . . 148
Fan and fan cage replacement 150
Remove a fan 150
Remove the fan cage 152
Install the fan cage 154
Install a fan 155
Flash power module replacement 157
Remove a flash power module 157
Install a flash power module 159
GPU adapter replacement 161
Remove a double-wide GPU adapter 161
Install a double-wide GPU adapter 165
Intrusion switch replacement 169
Remove the intrusion switch 169
Install the intrusion switch 171
Internal M.2 boot adapter and M.2 drive replacement 174
Remove an M.2 drive 174
Remove the M.2 boot adapter 175
Install the M.2 boot adapter 177
Install an M.2 drive 179
Lenovo Processor Neptune Core Module replacement (trained technicians only) 181
Remove the Lenovo Processor Neptune Core Module 182
Install the Lenovo Processor Neptune Core Module 188
Manifold replacement (trained technicians only) 196
Remove the manifold (in-rack system) 198
Install the manifold (in-rack system) 206
Remove the manifold (in-row system) 218
Install the manifold (in-row system) 226
Memory module replacement 236
Remove a memory module 236
Install a memory module 238
MicroSD card replacement (trained technician only) 242
Remove the MicroSD card 242
Install the MicroSD card 244
OCP module replacement 246
Remove an OCP module 246
Install an OCP module 247
PCIe riser and PCIe adapter replacement 248
Remove the PCIe riser 249
Remove a PCIe adapter 253
Install a PCIe adapter 257
Install the PCIe riser 261
PCIe riser card and cage replacement 265
Remove a PCIe riser card and cage 265
Install a PCIe riser card and cage 273
PCIe riser extender replacement 282
Remove a PCIe riser extender 282
Install a PCIe riser extender 285
Power distribution board replacement 288
Remove the power distribution board 288
Install the power distribution board 292
Power supply bracket (CRPS) replacement 294
Remove a power supply bracket (CRPS) . . . 294
Install a power supply bracket (CRPS) 297
Power supply unit replacement 298
Remove a power supply unit 298
Install a power supply unit 301
Processor and heat sink replacement (trained technician only) 305
Remove a processor and heat sink 306
Separate the processor from carrier and heat sink 309
Install a processor and heat sink 311
Rack latches replacement 318
Remove the rack latches 318
Install the rack latches 320
Rear hot-swap M.2 drive assembly replacement 322
Remove a hot-swap M.2 drive assembly . . . 322
Disassemble an M.2 drive assembly 324
Assemble the rear M.2 interposer and drive 327
Install a hot-swap M.2 drive assembly 330
Rear M.2 drive cage and M.2 boot adapter replacement 332
Remove the rear M.2 drive cage and M.2 boot adapter 332
Install the rear M.2 drive cage and M.2 boot adapter 336
Security bezel replacement 340
Remove the security bezel 341
Install the security bezel 342
Serial port module replacement 344
Remove the serial port module 344
Install the serial port module 347
System board assembly replacement (trained technician only) 351

System I/O board replacement (trained technicians only) . . . 352
Processor board replacement (trained technicians only) . . . 362
Top cover replacement . . . 369
Remove the front top cover . . . 369
Remove the rear top cover . . . 371
Install the rear top cover . . . 373
Install the front top cover . . . 375
USB I/O board replacement . . . 378
Remove the USB I/O board . . . 378
Install the USB I/O board . . . 380
Complete the parts replacement . . . 382

Chapter 6. System configuration . . . 385

Set the network connection for the Lenovo XClarity Controller . . . 385
Set USB port for Lenovo XClarity Controller connection . . . 385
Update the firmware . . . 386
Configure the firmware . . . 390
Memory module configuration . . . 391
Enable Software Guard Extensions (SGX) . . . 391
RAID configuration . . . 391
Deploy the operating system . . . 392
Back up the server configuration . . . 393

Chapter 7. Problem determination . . . 395

Event logs . . . 395
Troubleshooting by system LEDs and diagnostics display . . . 397
Drive LEDs . . . 397
E3.S CMM LEDs . . . 398
External diagnostics handset . . . 398
Front-operator-panel LEDs and buttons . . . 404
Leakage detection sensor module LED . . . 406
Processor board LEDs . . . 407
System I/O board LEDs . . . 408
Power supply LEDs . . . 411
Rear M.2 LEDs . . . 413
XCC system management port LEDs . . . 414
General problem determination procedures . . . 414
Resolving suspected power problems . . . 415
Resolving suspected Ethernet controller problems . . . 415
Troubleshooting by symptom . . . 416
Liquid cooling module problems . . . 417
Intermittent problems . . . 419
Keyboard, mouse, KVM switch or USB-device problems . . . 420
Hot-swap M.2 drive problems . . . 421
Memory problems . . . 422
Monitor and video problems . . . 423
Network problems . . . 424
Observable problems . . . 424
Optional-device problems . . . 427
Performance problems . . . 428
Power on and power off problems . . . 429
Power problems . . . 430
Serial-device problems . . . 431
Software problems . . . 432
Storage drive problems . . . 432
USB I/O board problems . . . 434

Appendix A. Hardware disassembling for recycle . . . 437

Disassemble the system board assembly for recycle . . . 437

Appendix B. Getting help and technical assistance . . . 441

Before you call . . . 441
Collecting service data . . . 442
Contacting Support . . . 443

Appendix C. Documents and supports . . . 445

Documents download . . . 445
Support websites . . . 445

Appendix D. Notices . . . 447

Trademarks . . . 448
Important notes . . . 448
Electronic emission notices . . . 448
Taiwan Region BSMI RoHS declaration . . . 449
Taiwan Region import and export contact information . . . 449
TCO Certified . . . 449

© Copyright Lenovo 2025

Safety

Before installing this product, read the Safety Information.

قبل تركيب هذا المنتج، يجب قراءة الملاحظات الآمنية

Antes de instalar este produto, leia as Informações de Segurança.

在安装本产品之前，请仔细阅读 Safety Information （安全信息）。

安裝本產品之前，請先閱讀「安全資訊」。

Prije instalacije ovog produkta obavezno pročitajte Sigurnosne Upute.

Před instalací tohoto produktu si přečtěte příručku bezpečnostních instrukcí.

Læs sikkerhedsforskrifterne, før du installerer dette produkt.

Lees voordat u dit product installeert eerst de veiligheidsvoorschriften.

Ennen kuin asennat tämän tuotteen, lue turvaohjeet kohdasta Safety Information.

Avant d'installer ce produit, lisez les consignes de sécurité.

Vor der Installation dieses Produkts die Sicherheitshinweise lesen.

Πριν εγκαταστήσετε το προϊόν αυτό, διαβάστε τις πληροφορίες ασφάλειας (safety information).

לפני שתתקינו מוצר זה, קראו את הוראות הבטיחות.

A termék telepítése előtt olvassa el a Biztonsági előírásokat!

Prima di installare questo prodotto, leggere le Informazioni sulla Sicurezza.

製品の設置の前に、安全情報をお読みください。

본 제품을 설치하기 전에 안전 정보를 읽으십시오.

Пред да се инсталира овој продукт, прочитајте информацијата за безбедност.

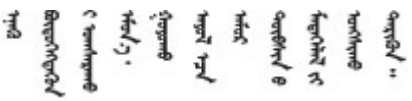

Les sikkerhetsinformasjonen (Safety Information) før du installerer dette produktet.

Przed zainstalowaniem tego produktu, należy zapoznać się z książką "Informacje dotyczące bezpieczeństwa" (Safety Information).

Antes de instalar este produto, leia as Informações sobre Segurança.

© Copyright Lenovo 2025

Перед установкой продукта прочтите инструкции по технике безопасности.

Pred inštaláciou tohto zariadenia si pečítaje Bezpečnostné predpisy.

Pred namestitvijo tega proizvoda preberite Varnostne informacije.

Antes de instalar este producto, lea la información de seguridad.

Läs säkerhetsinformationen innan du installerar den här produkten.

ཐོན་རྫས་འདི་བདེ་སྤྱོད་མ་བྱས་གོང་། ·སྐྱར་ཀྱི་ཡིད་གཟབ· བྱ་འདྲ་མིན་ཡོད་པའི་འོད་སྣེར་བལྟ་དགོས།

Bu ürünü kurmadan önce güvenlik bilgilerini okuyun.

ھەزكۇر مەھسۇلاتنى ئورنىتىشتىن بۇرۇن بىخەتەرلىك ئۇچۇرلىرىنى ئوقۇپ چىقىڭ.

Youq mwngz yungh canjbinj neix gaxgonq, itdingh aeu doeg aen canjbinj soengq cungj vahgangj ancien siusik.

Safety inspection checklist

Use the information in this section to identify potentially unsafe conditions with your server. As each machine was designed and built, required safety items were installed to protect users and service technicians from injury.

Note: The product is not suitable for use at visual display workplaces according to §2 of the Workplace Regulations.

Note: The set-up of the server is made in the server room only.

CAUTION:
This equipment must be installed or serviced by trained personnel, as defined by the NEC, IEC 62368-1 & IEC 60950-1, the standard for Safety of Electronic Equipment within the Field of Audio/Video, Information Technology and Communication Technology. Lenovo assumes you are qualified in the servicing of equipment and trained in recognizing hazards energy levels in products. Access to the equipment is by the use of a tool, lock and key, or other means of security, and is controlled by the authority responsible for the location.

Important: Electrical grounding of the server is required for operator safety and correct system function. Proper grounding of the electrical outlet can be verified by a certified electrician.

Use the following checklist to verify that there are no potentially unsafe conditions:

1. Make sure that the power is off and the power cord is disconnected.
2. Check the power cord.
   - Make sure that the third-wire ground connector is in good condition. Use a meter to measure third-wire ground continuity for 0.1 ohm or less between the external ground pin and the frame ground.
   - Make sure that the power cord is the correct type.

     To view the power cords that are available for the server:

     a. Go to:

http://dcsc.lenovo.com/#/

b. Click **Preconfigured Model** or **Configure to order**.
c. Enter the machine type and model for your server to display the configurator page.
d. Click **Power → Power Cables** to see all line cords.

- Make sure that the insulation is not frayed or worn.

3. Check for any obvious non-Lenovo alterations. Use good judgment as to the safety of any non-Lenovo alterations.
4. Check inside the server for any obvious unsafe conditions, such as metal filings, contamination, water or other liquid, or signs of fire or smoke damage.
5. Check for worn, frayed, or pinched cables.
6. Make sure that the power-supply cover fasteners (screws or rivets) have not been removed or tampered with.
7. The design of the electrical distribution system must take into consideration the total grounding leakage current from all power supplies in the server.

CAUTION:



High touch current. Connect to earth before connecting to supply.

© Copyright Lenovo 2025

Chapter 1. Introduction

The ThinkSystem SR860 V4 server (Types 7DJN, 7DJR, and 7DJQ) is a 4-socket 4U rack server based on Intel® Xeon® 6 processors. This high-performance, multi-core server is ideally suited for networking environments that require superior processor performance, input/output (I/O) flexibility, and high manageability.

Figure 1. ThinkSystem SR860 V4



Features

Performance, ease of use, reliability, and expansion capabilities were key considerations in the design of your server. These design features make it possible for you to customize the system hardware to meet your needs today and provide flexible expansion capabilities for the future.

Your server implements the following features and technologies:

- **Features on Demand**

  If a Features on Demand feature is integrated in the server or in an optional device that is installed in the server, you can purchase an activation key to activate the feature. For information about Features on Demand, see:

  https://fod.lenovo.com/lkms

- **Lenovo XClarity Controller (XCC)**

  The Lenovo XClarity Controller is the common management controller for Lenovo ThinkSystem server hardware. The Lenovo XClarity Controller consolidates multiple management functions in a single chip on the server system board (system board assembly). Some of the features that are unique to the Lenovo XClarity Controller are enhanced performance, higher-resolution remote video, and expanded security options.

  The server supports Lenovo XClarity Controller 3 (XCC3). For additional information about Lenovo XClarity Controller 3 (XCC3), refer to https://pubs.lenovo.com/lxcc-overview/.

- **UEFI-compliant server firmware**

  Lenovo ThinkSystem firmware is Unified Extensible Firmware Interface (UEFI) compliant. UEFI replaces BIOS and defines a standard interface between the operating system, platform firmware, and external devices.

  Lenovo ThinkSystem servers are capable of booting UEFI-compliant operating systems and UEFI-compliant adapters.

© Copyright Lenovo 2025

Note: The server does not support Disk Operating System (DOS).

- **Active Memory**

  The Active Memory feature improves the reliability of memory through memory mirroring. Memory mirroring mode replicates and stores data on one or two DIMMs within the channel (DIMM configuration must match between the mirrored channels). If a failure occurs, the memory controller switches from the primary memory DIMMs to the backup DIMMs.

- **Large system-memory capacity**

  The server supports up to 64 TruDDR5 DIMMs and up to 16 Compute Express Link (CXL) memory expansion modules in E3.S 2T form factor. For more information about the specific types and maximum amount of memory, see "Technical specifications" on page 3.

- **Lightpath Diagnostics**

  Lightpath Diagnostics provides LEDs to help you diagnose problems. For more information about the Lightpath Diagnostics, see "Troubleshooting by system LEDs and diagnostics display" on page 397.

- **Mobile access to Lenovo Service Information website**

  The server provides a QR code on the system service information, which is on the cover of the server, that you can scan using a QR code reader and scanner with a mobile device to get quick access to the Lenovo Service Information website. The Lenovo Service Information website provides additional information for parts installation, replacement videos, and error codes for server support.

- **Active Energy Manager**

  Lenovo XClarity Energy Manager is a power and temperature management solution for data centers. You can monitor and manage the power consumption and temperature of servers, and improve energy efficiency using Lenovo XClarity Energy Manager.

- **Redundant networking connection**

  The Lenovo XClarity Controller provides failover capability to a redundant Ethernet connection with the applicable application installed. If a problem occurs with the primary Ethernet connection, all Ethernet traffic that is associated with the primary connection is automatically switched to the optional redundant Ethernet connection. If the applicable device drivers are installed, this switching occurs without data loss and without user intervention.

- **Cooling**
  - Redundant air cooling by fans, which enables continued operation if one of the fan rotors fails.
  - Liquid cooling by Processor Neptune® Core Module, which removes the heat from processors.

- **ThinkSystem RAID support**

  The ThinkSystem RAID adapter provides hardware redundant array of independent disks (RAID) support to create configurations, supporting 0, 1, 10, 5, 50, 6, and 60.

Tech Tips

Lenovo continually updates the support website with the latest tips and techniques that you can use to solve issues that your server might encounter. These Tech Tips (also called retain tips or service bulletins) provide procedures to work around issues or solve problems related to the operation of your server.

To find the Tech Tips available for your server:

1. Go to http://datacentersupport.lenovo.com and navigate to the support page for your server.
2. Click on **How To's** from the navigation pane.
3. Click **Article Type → Solution** from the drop-down menu.

Follow the on-screen instructions to choose the category for the problem that you are having.

Security advisories

Lenovo is committed to developing products and services that adhere to the highest security standards in order to protect our customers and their data. When potential vulnerabilities are reported, it is the responsibility of the Lenovo Product Security Incident Response Team (PSIRT) to investigate and provide information to our customers so they may put mitigation plans in place as we work toward providing solutions.

The list of current advisories is available at the following site:

https://datacentersupport.lenovo.com/product_security/home

Specifications

Summary of the features and specifications of the server. Depending on the model, some features might not be available, or some specifications might not apply.

Refer to the below table for specifications categories and the content of each category.

Specification category	Technical specifications	Mechanical specifications	Environmental specifications
Content	• Processor • Memory • M.2 Drive • Storage expansion • Expansion slots • Integrated functions and I/O connectors • Network • RAID adapter • Host bus adapter • System fan • Power supply • Minimal configuration for debugging • Operating systems	• Dimension • Weight	• Acoustical noise emissions • Ambient temperature management • Environmental

Technical specifications

Summary of the technical specifications of server. Depending on the model, some features might not be available, or some specifications might not apply.

Processor

Supports multi-core Intel Xeon processors, with integrated memory controller and Intel Mesh UPI (Ultra Path Interconnect) topology.

- Up to four Intel Xeon 6 processors with P-cores (Granite Rapids-SP, GNR-SP)
- Designed for the Land Grid Array (LGA) 4710 socket
- Up to 86 cores per socket
- Up to three UPI links at up to 24 GT/s
- Thermal Design Power (TDP): up to 350 watts

Note: For a list of supported processors, see https://serverproven.lenovo.com.

Memory

See "Memory module installation rules and order" on page 48 for detailed information about memory configuration and setup.

- 64 dual inline memory module (DIMM) slots that support up to 64 DRAM DIMMs
- Up to 16 Compute Express Link (CXL) memory modules in the E3.S 2T form factor
- Memory module types:
  - TruDDR5 6400 MHz 10x4 RDIMM: 32 GB (1Rx4), 64 GB (2Rx4), 96 GB (2Rx4)
  - TruDDR5 6400 MHz RDIMM: 128 GB (2Rx4)
  - TruDDR5 6400 MHz 3DS RDIMM: 256 GB (4Rx4)
  - CXL memory module (CMM): 96 GB, 128 GB

  Notes:
  - E3.S CXL memory modules are supported only by server models with E3.S 2T bays.
  - CXL memory modules are not supported with Windows Server and VMware ESXi. For specifics, see https://lenovopress.lenovo.com/osig.
  - Intel® VMD is not supported with E3.S 2T CMMs.
- Speed: The operating speed depends on processor model and UEFI settings.
  - 1 DPC: 6400 MT/s
  - 2 DPC: 5200 MT/s
- Capacity:
  - Minimum: 64 GB (2 x 32 GB RDIMMs)
  - Maximum: 16 TB (64 x 256 GB 3DS RDIMMs)

For a list of supported memory modules, see https://serverproven.lenovo.com.

M.2 Drive

Depending on the configuration, the server supports one of the following:

- Up to two internal non-hot-swap M.2 drives
- Up to two rear hot-swap M.2 drives on riser 3 assembly (slot 15 or slot 20)

For a list of supported M.2 drives, see https://serverproven.lenovo.com.

Storage expansion

Supported storage expansion varies by model.

- Server models with 2.5-inch front drive bays:
  - Up to 48 SAS/SATA hot-swap drives
  - Up to 24 NVMe hot-swap drives and 24 SAS/SATA hot-swap drives
- Server models with E3.S bays:
  - Up to 32 E3.S 1T hot-swap drives and 24 SAS/SATA hot-swap drives
  - Up to 16 E3.S 2T bays for CXL memory and 24 SAS/SATA hot-swap drives

For a list of supported drives, see https://serverproven.lenovo.com.

For information about storage configurations, see Overview of storage configurations.

Expansion slots

- Up to 18 PCIe slots (depending on the server model):
  - Riser 1: up to six full-height (FH) PCIe slots
  - Riser 2: up to six low-profile (LP) PCIe slots
  - Riser 3: up to six FH PCIe slots
- Up to two OCP slots

Graphics processing unit (GPU)

The server supports the following GPU configurations:

- Up to eight single-wide GPUs
- Up to four double-wide GPUs

For a list of supported GPUs, see https://serverproven.lenovo.com.

Integrated functions and I/O connectors

- Lenovo XClarity Controller (XCC), which provides service processor control and monitoring functions, video controller, and remote keyboard, video, mouse, and remote drive capabilities.
  - The server supports Lenovo XClarity Controller 3 (XCC3). For additional information about Lenovo XClarity Controller 3 (XCC3), refer to https://pubs.lenovo.com/lxcc-overview/.
- Front connectors:
  - One Mini DisplayPort connector (optional)[1]
  - One USB 3.2 Gen1 (5 Gbps) connector (optional)
  - One USB 3.2 Gen 1 (5Gbps) connector with USB 2.0 XCC system management (optional)
  - One external diagnostics connector
- Internal connector:
  - One internal USB 3.2 Gen1 (5 Gbps) connector (optional)
- Rear connectors:
  - One VGA connector[1]
  - One serial port (optional)
  - One XCC system management port (10/100/1000 Mbps RJ-45)
  - Two or four Ethernet connectors on each OCP module (optional)
  - Two USB 3.2 Gen1 (5 Gbps) connectors[2]

Notes:

1. The maximum video resolution is 1920 x 1200 at 60 Hz.
2. The lower USB connector at the rear functions as a USB 2.0 connector with XCC system management when there are no USB connectors at the front.

Network
• Two or four Ethernet connectors on each OCP module (optional) • One XCC system management port (10/100/1000 Mbps RJ-45)

Storage controller
Onboard NVMe ports with software RAID support (Intel VROC NVMe RAID): • Intel VROC RAID1 Only: requires an activation key and supports RAID level 1 only • Intel VROC Standard: requires an activation key and supports RAID levels 0, 1, and 10 • Intel VROC Premium: requires an activation key and supports RAID levels 0, 1, 5, and 10 RAID adapters for hardware RAID support: • RAID 545-8i adapter: RAID 0, 1, 10 • RAID 940-8i adapter: RAID 0, 1, 10, 5, 50, 6, 60 • RAID 940-16i adapter: RAID 0, 1, 10, 5, 50, 6, 60 HBA adapters support JBOD only: • HBA 440-16i adapter • HBA 440-16e adapter M.2 adapter: RAID levels 0, 1 For more information about the RAID/HBA adapters or M.2 adapters, see Lenovo ThinkSystem RAID Adapter and HBA Reference or Lenovo ThinkSystem M.2 Adapters.

System fan
The server supports one of the following fan types: • Standard fan (60 x 60 x 38 mm, single-rotor, 24000 RPM) • Performance fan (60 x 60 x 56 mm, dual-rotor, 20000 RPM) • Ultra fan (60 x 60 x 56 mm, dual-rotor, 21000 RPM) **Note:** Do not mix different fan types in the same server.

Power supplies

The server supports up to four power supplies with N+N redundancy.

Following is the list of supported types:

- CRPS Premium (CFFv5)
  - 1300W 230V/115V Titanium
  - 2000W 230V/115V Titanium
  - 2700W 230V/115V Titanium
  - 3200W 230V/115V Titanium
  - 1300W HVAC/HVDC Platinum
  - 1300W -48V DC
- CRPS
  - 1300W 230V/115V Platinum
  - 2700W 230V/115V Platinum

Supported power supply configurations:

- 4 PSUs: 2 + 2
- 2 PSUs: 1 + 1
- 1 PSU: 1+0 (only supported with 2700-watt CRPS Premium PSUs)

Important:

- Power supplies and redundant power supplies in the server must be with the same power rating, wattage or level.
- Mixing of CRPS PSUs from different vendors are not supported.

CAUTION:

- **240 Vdc input (input range: 180-300 V dc) is supported in Chinese Mainland ONLY.**
- **Power supply with 240 Vdc input cannot support hot-plugging power cord function. Before removing the power supply with dc input, please turn off server or disconnect dc power sources at the breaker panel or by turning off the power source. Then, remove the power cord.**

Notes:

- India region supports PSUs up to 2700-watt.
- The actual power efficiency depends on system configuration.
- Only CRPS Premium power supplies support Over-subscription (OVS), Virtual Reseat, Zero-Output mode.
- The following Lenovo XClarity Controller options are supported only when CRPS Premium power supplies are installed:
  - Power redundant options such as **Zero Output Mode** and **Non-redundant**
  - **AC Power Cycle Server** option under **Power Action**

Minimal configuration for debugging

- Two processors in processor socket 1 and 2
- Two DRAM DIMMs in slot 10 and 26
- Two power supplies
- One 2.5-inch drive or E3.S drive, or one M.2 drive (if OS is needed for debugging)
- Six system fan modules

Operating systems
Supported and certified operating systems: • Microsoft Windows Server • Red Hat Enterprise Linux • SUSE Linux Enterprise Server • Canonical Ubuntu References: • Complete list of available operating systems: https://lenovopress.lenovo.com/osig. • OS deployment instructions, see “Deploy the operating system” on page 392.

Mechanical specifications

Summary of the mechanical specifications of server. Depending on the model, some features might not be available, or some specifications might not apply.

Dimension
4 U server • Height: 175 mm (6.9 inches) • Width: – With rack handles: 482 mm (18.98 inches) – Without rack handles: 447 mm (17.60 inches) • Depth: – Chassis with 2.5-inch drive bays: 869 mm (34.21 inches) – Chassis with E3.S bays: 909 mm (35.79 inches)

Weight
• Chassis with 2.5-inch drive bays: Up to 59 kg (130.1 lb), depending on the server configuration • Chassis with E3.S bays: Up to 64 kg (141.1 lb), depending on the server configuration

Environmental specifications

Summary of the environmental specifications of server. Depending on the model, some features might not be available, or some specifications might not apply.

Acoustical noise emissions

The server has the following acoustic noise emissions declaration:

Table 1. Acoustic noise emissions declaration

Acoustic performance @ 25°C ambient	Working mode	Configuration	
		Typical	Max.
Declared mean A-weighted sound power level, $L_{WA,m}$ (B) Statistical adder for verification, Kv (B) = 0.4	Idle	6.8	6.8
	Operating mode 1	7.2	7.9
	Operating mode 2	7.9	8.5

Table 1. Acoustic noise emissions declaration (continued)

Acoustic performance @ 25°C ambient	**Working mode**	**Configuration**	
		Typical	**Max.**
Declared mean A-weighted emission sound pressure level, $L_{pA,m}$ (dB) Bystander position	Idle	53	53
	Operating mode 1	58	66
	Operating mode 2	66	72

Notes:

- These sound levels were measured in controlled acoustical environments according to procedures specified by ISO7779 and are reported in accordance with ISO 9296.
- Idle mode is the steady state in which the server is powered on but not operating any intended function. Operating mode 1 is 50% CPU TDP. Operating mode 2 is 100% CPU TDP.
- The declared acoustic sound levels are based on the following configurations, which may change depending on configuration or conditions.
  - **Typical**: 4 x 270W CPUs, 32 x 64 GB RDIMMs, 24 x 2.5" SAS HDDs, 1 x RAID 545-8i, 1 x Intel E610-T4 10GBASE-T 4-port OCP, 4 x 2000W PSUs
  - **Max.**: 4 x 350W CPUs, 64 x 64 GB RDIMMs, 48 x 2.5" SAS HDDs, 3 x RAID 940-16i, 2 x Intel E610-T4 10GBASE-T 4-port OCP, 4 x 3200W PSUs
- Government regulations (such as those prescribed by OSHA or European Community Directives) may govern noise level exposure in the workplace and may apply to you and your server installation. The actual sound pressure levels in your installation depend upon a variety of factors, including the number of racks in the installation; the size, materials, and configuration of the room; the noise levels from other equipment; the room ambient temperature, and employee's location in relation to the equipment. Further, compliance with such government regulations depends on a variety of additional factors, including the duration of employees' exposure and whether employees wear hearing protection. Lenovo recommends that you consult with qualified experts in this field to determine whether you are in compliance with the applicable regulations.

Ambient temperature management

Manage the ambient temperature for your server depending on the specific hardware components installed.

Note: The tables below show the temperature limits for servers without a liquid-cooling module (Processor Neptune® Core Module). When the liquid-cooling module is installed, the CPU supports temperatures up to 45°C regardless of the fan type or number of drives. However, other components like the GPU and NIC adapters still need to follow the same temperature limits as air-cooled systems, which are listed below.

Server models with 2.5-inch drive bays

System fan	Max. ambient temp.[1]	CPU TDP	DIMM capacity (per module)	Max. drive qty.	Rear M.2 drives	GPU adapter	NIC adapter
Standard fans	45°C	<= 165W	<= 32 GB	48	None	None	None
Standard fans	40°C	<= 165W	<= 32 GB	48	None	None	None
Standard fans	35°C	<=210W	<= 32 GB	48	None	None	None
Standard fans	30°C	<=270W	<= 64 GB	48[2]	2	None	None
Standard fans	25°C	<=270W	<= 64 GB	48[2]	2	None	See note[3]
Perform-ance fans	45°C	<=270W	<= 32 GB	48	None	None	None
Perform-ance fans	40°C	<=270W	<= 32 GB	48	None	None	None
Perform-ance fans	35°C	<=350W	<= 64 GB	48	None	None	See note[3,4]
Perform-ance fans	30°C	<=350W	<= 128 GB	48	2	See note[6]	See note[3,4,5]
Perform-ance fans	25°C	<=350W	<= 128 GB	48	2	See note[6]	See note[3,4,5]
Ultra fans	45°C	<=270W	<= 64 GB	48	None	None	None
Ultra fans	40°C	<=270W	<= 64 GB	48	None	None	None
Ultra fans	35°C	<=350W	<= 128 GB	48	2	None	See note[3,4]
Ultra fans	30°C	<=350W	<= 128 GB	48	2	See note[6]	See note[3,4,5]
Ultra fans	25°C	<=350W	<= 256 GB	48[7]	2	See note[6]	See note[3,4,5]

Notes:

1. The server's performance may be impacted if operated under 40°C or 45°C.
2. The 64 GB RDIMMs are supported in servers with only 24 x 2.5-inch drives.
3. NIC adapters without active optic cables (AOC) are supported.
4. NIC adapters with AOC cables are supported. When the CPU TDP is 270W or lower, the ambient temperature can be up to 35°C.
5. The Broadcom BCM57608 2x200G OCP Ethernet adapter is supported in servers with only 24 x 2.5-inch drives.

6. A maximum of four double-wide (DW) GPU adapters or eight single-wide (SW) GPU adapters are supported. When DW GPU adapters are installed, the 2U performance heat sinks must be used for processor 1 and processor 2.
7. The 256 GB RDIMMs are supported in servers with only 24 x 2.5-inch drives.

Server models with E3.S bays

System fan	Max. ambient temp.	CPU TDP	DIMM capacity (per module)	Max. drive quantity		Rear M.2 drives	GPU adapter	NIC adapter
				2.5" drive	E3.S 1T drive			
Ultra fans	35°C	<=350W	<= 128 GB	24	32	None	None	See note[1,2]
Ultra fans	30°C	<=350W	<= 128 GB	24	32	2	See note[3]	See note[1,2]
Ultra fans	25°C	<=350W	<= 128 GB	24	32	2	See note[3]	See note[1,2]

Notes:

1. NIC adapters without active optic cables (AOC) are supported.
2. NIC adapters with AOC cables are supported. When the CPU TDP is 270W or lower, the ambient temperature can be up to 35°C.
3. A maximum of four double-wide (DW) GPU adapters or eight single-wide (SW) GPU adapters are supported. When DW GPU adapters are installed, the 2U performance heat sinks must be used for processor 1 and processor 2.

Environment

Environment
ThinkSystem SR860 V4 complies with ASHRAE Class A2 specifications under most hardware configurations, and depending on specific hardware configuration, it may also comply with ASHRAE Class A3, Class A4, or Class H1 specifications. Refer to "Ambient temperature management" on page 10 for information about temperature requirement for specific hardware. The server's performance may be impacted if operated outside the specified ASHRAE temperature classes it complies with. **Note:** The server is designed for standard data center environment and recommended to be placed in industrial data center. • Air temperature: – Operating – ASHRAE Class H1: 5°C to 25°C (41°F to 77°F); the maximum ambient temperature decreases by 1°C for every 500 m (1640 ft) increase in altitude above 900 m (2,953 ft). – ASHRAE Class A2: 10°C to 35°C (50°F to 95°F); the maximum ambient temperature decreases by 1°C for every 300 m (984 ft) increase in altitude above 900 m (2,953 ft). – ASHRAE Class A3: 5°C to 40°C (41°F to 104°F); the maximum ambient temperature decreases by 1°C for every 175 m (574 ft) increase in altitude above 900 m (2,953 ft). – ASHRAE Class A4: 5°C to 45°C (41°F to 113°F); the maximum ambient temperature decreases by 1°C for every 125 m (410 ft) increase in altitude above 900 m (2,953 ft). – Server off: 5°C to 45°C (41°F to 113°F) – Shipment/storage: -40°C to 60°C (-40°F to 140°F) • Maximum altitude: 3,050 m (10,000 ft) • Relative Humidity (non-condensing): – Operating – ASHRAE Class H1: 8% to 80%; maximum dew point: 17°C (62.6°F) – ASHRAE Class A2: 8% to 80%; maximum dew point: 21°C (70°F) – ASHRAE Class A3: 8% to 85%; maximum dew point: 24°C (75°F) – ASHRAE Class A4: 8% to 90%; maximum dew point: 24°C (75°F) – Shipment/storage: 8% to 90% • Particulate contamination **Attention:** Airborne particulates and reactive gases acting alone or in combination with other environmental factors such as humidity or temperature might pose a risk to the server. For information about the limits for particulates and gases, see "Particulate contamination" on page 13.

Water requirements

Water requirements
ThinkSystem SR860 V4 is supported in the following environment: • Maximum pressure: 3 bars • Water inlet temperature and flow rates: – For servers with Processor Neptune® Core Module, the water inlet temperature and water flow rate can be as follows:

Water inlet temperature	Water flow rate
50°C (122°F)	**1.5** liters per minute (lpm) per server
45°C (113°F)	**1** liter per minute (lpm) per server
40°C (104°F) or lower	**0.5** liters per minute (lpm) per server

Attention: The water required to initially fill the system side cooling loop must be reasonably clean, bacteria-free water (<100 CFU/ml) such as de-mineralized water, reverse osmosis water, de-ionized water, or distilled water. The water must be filtered with an in-line 50 micron filter (approximately 288 mesh). The water must be treated with anti-biological and anti-corrosion measures. Environment quality must be maintained over the lifetime of the system to receive warranty and support on affecting components. For more information, see Lenovo Neptune Direct Water-Cooling Standards.

Particulate contamination

Attention: Airborne particulates (including metal flakes or particles) and reactive gases acting alone or in combination with other environmental factors such as humidity or temperature might pose a risk to the device that is described in this document.

Risks that are posed by the presence of excessive particulate levels or concentrations of harmful gases include damage that might cause the device to malfunction or cease functioning altogether. This specification sets forth limits for particulates and gases that are intended to avoid such damage. The limits must not be viewed or used as definitive limits, because numerous other factors, such as temperature or moisture content of the air, can influence the impact of particulates or environmental corrosives and gaseous contaminant transfer. In the absence of specific limits that are set forth in this document, you must implement practices that maintain particulate and gas levels that are consistent with the protection of human health and safety. If Lenovo determines that the levels of particulates or gases in your environment have caused damage to the device, Lenovo may condition provision of repair or replacement of devices or parts on implementation of appropriate remedial measures to mitigate such environmental contamination. Implementation of such remedial measures is a customer responsibility.

Table 2. Limits for particulates and gases

Contaminant	Limits
Reactive gases	Severity level G1 as per ANSI/ISA 71.04-1985[1]: • The copper reactivity level shall be less than 200 Angstroms per month (Å/month ≈ 0.0035 µg/cm^2-hour weight gain).[2] • The silver reactivity level shall be less than 200 Angstroms per month (Å/month ≈ 0.0035 µg/cm^2-hour weight gain).[3] • The reactive monitoring of gaseous corrosivity must be conducted approximately 5 cm (2 in.) in front of the rack on the air inlet side at one-quarter and three-quarter frame height off the floor or where the air velocity is much higher.
Airborne particulates	Data centers must meet the cleanliness level of ISO 14644-1 class 8. For data centers without airside economizer, the ISO 14644-1 class 8 cleanliness might be met by choosing one of the following filtration methods: • The room air might be continuously filtered with MERV 8 filters. • Air entering a data center might be filtered with MERV 11 or preferably MERV 13 filters. For data centers with airside economizers, the choice of filters to achieve ISO class 8 cleanliness depends on the specific conditions present at that data center. • The deliquescent relative humidity of the particulate contamination should be more than 60% RH.[4] • Data centers must be free of zinc whiskers.[5]

[1] ANSI/ISA-71.04-1985. *Environmental conditions for process measurement and control systems: Airborne contaminants*. Instrument Society of America, Research Triangle Park, North Carolina, U.S.A.

[2] The derivation of the equivalence between the rate of copper corrosion growth in the thickness of the corrosion product in Å/month and the rate of weight gain assumes that Cu_2S and Cu_2O grow in equal proportions.

[3] The derivation of the equivalence between the rate of silver corrosion growth in the thickness of the corrosion product in Å/month and the rate of weight gain assumes that Ag_2S is the only corrosion product.

[4] The deliquescent relative humidity of particulate contamination is the relative humidity at which the dust absorbs enough water to become wet and promote ionic conduction.

[5] Surface debris is randomly collected from 10 areas of the data center on a 1.5 cm diameter disk of sticky electrically conductive tape on a metal stub. If examination of the sticky tape in a scanning electron microscope reveals no zinc whiskers, the data center is considered free of zinc whiskers.

Management options

The XClarity portfolio and other system management options described in this section are available to help you manage the servers more conveniently and efficiently.

Overview

Options	Description
Lenovo XClarity Controller	Baseboard management controller (BMC) Consolidates the service processor functionality, Super I/O, video controller, and remote presence capabilities into a single chip on the server system board (system board assembly). **Interface** • CLI application • Web GUI interface • Mobile application • Redfish API **Usage and downloads** https://pubs.lenovo.com/lxcc-overview/
Lenovo XCC Logger Utility	Application that reports the XCC events to local OS system log. **Interface** • CLI application **Usage and downloads** • https://pubs.lenovo.com/lxcc-logger-linux/ • https://pubs.lenovo.com/lxcc-logger-windows/
Lenovo XClarity Administrator	Centralized interface for multi-server management. **Interface** • Web GUI interface • Mobile application • REST API **Usage and downloads** https://pubs.lenovo.com/lxca/

Options	Description
Lenovo XClarity Essentials toolset	Portable and light toolset for server configuration, data collection, and firmware updates. Suitable both for single-server or multi-server management contexts. **Important:** To read and configure UEFI and BMC settings, use the latest versions of OneCLI 5.x, BoMC 14.x, and UpdateXpress 5.x. **Interface** • **OneCLI**: CLI application • **Bootable Media Creator**: CLI application, GUI application • **UpdateXpress**: GUI application **Usage and downloads** https://pubs.lenovo.com/lxce-overview/
Lenovo XClarity Provisioning Manager	UEFI-based embedded GUI tool on a single server that can simplify management tasks. **Interface** • Web interface (BMC remote access) • GUI application **Usage and downloads** https://pubs.lenovo.com/lxpm-overview/ **Important:** Lenovo XClarity Provisioning Manager (LXPM) supported version varies by product. All versions of Lenovo XClarity Provisioning Manager are referred to as Lenovo XClarity Provisioning Manager and LXPM in this document, unless specified otherwise. To see the LXPM version supported by your server, go to https://pubs.lenovo.com/lxpm-overview/.
Lenovo XClarity Integrator	Series of applications that integrate the management and monitoring functionalities of the Lenovo physical servers with the software used in a certain deployment infrastructure, such as VMware vCenter, Microsoft Admin Center, or Microsoft System Center while delivering additional workload resiliency. **Interface** • GUI application **Usage and downloads** https://pubs.lenovo.com/lxci-overview/

Options	Description
Lenovo XClarity Energy Manager	Application that can manage and monitor server power and temperature. **Interface** • Web GUI Interface **Usage and downloads** https://datacentersupport.lenovo.com/solutions/lnvo-lxem
Lenovo Capacity Planner	Application that supports power consumption planning for a server or rack. **Interface** • Web GUI Interface **Usage and downloads** https://datacentersupport.lenovo.com/solutions/lnvo-lcp

Functions

Options		Functions							
		Multi-system mgmt	**OS deploy-ment**	**System configu-ration**	**Firm-ware up-dates[1]**	**Event-s/alert moni-toring**	**Inven-tory/ logs**	**Pow-er mgmt**	**Power planning**
Lenovo XClarity Controller				√	√[2]	√	√[4]		
Lenovo XCC Logger Utility						√			
Lenovo XClarity Administrator		√	√	√	√[2]	√	√[4]		
Lenovo XClarity Essen-tials toolset	OneCLI	√		√	√[2]	√	√		
	Bootable Media Creator			√	√[2]		√[4]		
	UpdateXpress			√	√[2]				
Lenovo XClarity Provisioning Manager			√	√	√[3]		√[5]		
Lenovo XClarity Integrator		√		√	√	√	√	√[6]	
Lenovo XClarity Energy Manager		√				√		√	
Lenovo Capacity Planner									√[7]

Notes:

1. Most options can be updated through the Lenovo tools. Some options, such as GPU firmware or Omni-Path firmware require the use of supplier tools.
2. The server UEFI settings for option ROM must be set to **Auto** or **UEFI** to update firmware using Lenovo XClarity Administrator, Lenovo XClarity Essentials, or Lenovo XClarity Controller.
3. Firmware updates are limited to Lenovo XClarity Provisioning Manager, Lenovo XClarity Controller, and UEFI updates only. Firmware updates for optional devices, such as adapters, are not supported.

4. The server UEFI settings for option ROM must be set to **Auto** or **UEFI** for detailed adapter card information, such as model name and firmware levels, to be displayed in Lenovo XClarity Administrator, Lenovo XClarity Controller, or Lenovo XClarity Essentials.
5. Limited inventory.
6. Power management function is supported only by Lenovo XClarity Integrator for VMware vCenter.
7. It is highly recommended that you check the power summary data for your server using Lenovo Capacity Planner before purchasing any new parts.

Chapter 2. Server components

This section contains information about each of the components associated with the server.

Front view

This section contains information about the controls, LEDs, and connectors on the front of the server.

Front view of the sever model with 2.5-inch bays

This section contains information on the front view of the sever model with 2.5-inch drives.

Front view of the sever model with 2.5-inch bays

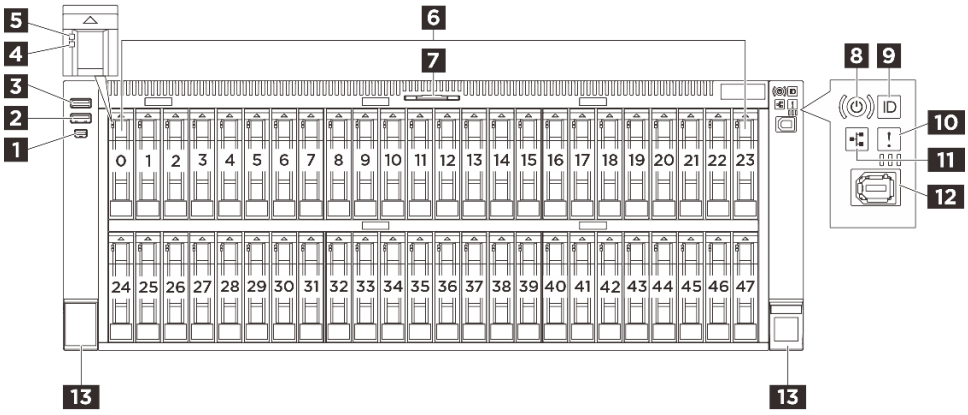

Figure 2. Front view of the sever model with 2.5-inch bays

1 Mini DisplayPort connector	2 USB 3.2 Gen 1 (5 Gbps) connector
3 USB 3.2 Gen 1 (5 Gbps) with connector USB2.0 XCC management	4 Drive status LED (yellow)
5 Drive activity LED (green)	6 2.5-inch drive bays
7 Pull-out information tab	8 Power button with LED (green)
9 System ID button with LED (blue)	10 System error LED (yellow)
11 Network activity LED (green)	12 External diagnostics connector
13 Rack release latches	

1 Mini DisplayPort connector

The Mini DisplayPort (MiniDP) connector can be used to attach a high-performance monitor and a direct-drive monitor with a video converter, or the devices that use a MiniDP connector.

2 USB 3.1 Gen 1 (5 Gbps) connector

The USB 3.1 Gen 1 (5 Gbps) connector can be used to attach a USB-compatible device, such as a USB keyboard, USB mouse, or USB storage device.

© Copyright Lenovo 2025

3 USB 3.2 Gen 1 (5 Gbps) with connector USB2.0 XCC management

The connector can function as a regular USB 3.2 Gen 1 connector to the host OS; it can be used to attach a USB-compatible device, such as a USB keyboard, USB mouse, or USB storage device.

In addition, the connector can function as a USB 2.0 Lenovo XClarity Controller management port.

4 5 2.5-inch drive LEDs

Each 2.5-inch drive comes with an activity LED and a status LED.

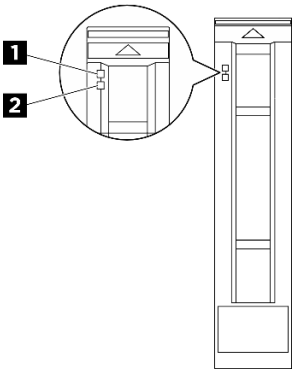

Figure 3. 2.5-inch drive LEDs

LED	Status	Description
1 Drive activity LED (green)	Solid on	The drive is powered but not active.
	Blinking	The drive is being accessed (reading or writing data).
2 Drive status LED (yellow)	Solid on	The drive has an error.
	Slow blinking (about one flash per second)	The drive is being rebuilt.
	Fast blinking (about three flashes per second)	The drive is being identified.

6 2.5-inch drive bays

The drive bays are used to install hot-swap 2.5-inch drives. When you install drives, follow the order of the drive bay numbers. The EMI integrity and cooling of the server are protected by having all drive bays occupied. The vacant drive bays must be occupied by drive bay fillers or drive fillers.

7 Pull-out information tab

This tab contains network information such as MAC address and XCC network access label.

8 Power button with LED (green)

Press this button to turn the server on and off manually. The states of the power LED are as follows:

Status	Color	Description
Solid on	Green	The server is on and running.
Slow blinking (about one flash per second)	Green	The server is off and is ready to be powered on (standby state).

Status	Color	Description
Fast blinking (about four flashes per second)	Green	• The server is off, but the XClarity Controller is initializing, and the server is not ready to be powered on. • System-board-assembly power has failed.
Off	None	Power is not present, or the power supply has failed.

9 System ID button with LED (blue)

Use this system ID button and the blue system ID LED to visually locate the server. A system ID LED is also located on the rear of the server. Each time you press the system ID button, the state of both the system ID LEDs changes. The LEDs can be changed to on, blinking, or off. You can also use the Lenovo XClarity Controller or a remote management program to change the state of the system ID LEDs to assist in visually locating the server among other servers.

10 System error LED (yellow)

The system error LED helps you to determine if there are any system errors.

Status	Color	Description	Action
On	Amber	An error has been detected on the server. Causes might include but are not limited to the following errors: • The temperature of the server reached the non-critical temperature threshold. • The voltage of the server reached the non-critical voltage threshold. • A fan has been detected to be running at low speed. • A hot-swap fan has been removed. • The power supply has a critical error. • The power supply is not connected to the power. • A processor error. • A system I/O board or processor board error. • Abnormal status is detected on the Processor Neptune® Core Module.	• Check the Lenovo XClarity Controller event log and the system event log to determine the exact cause of the error. • Check if additional LEDs in the server are lit. It will direct you to the error source. See “Troubleshooting by system LEDs and diagnostics display” on page 397. • Save the log if necessary. **Note:** For server models with Processor Neptune® Core Module installed, it is required to open the top cover to check the LED status of the leakage detection sensor module. For more instructions, see “Leakage detection sensor module LED” on page 406.
Off	None	The server is off or the server is on and is working correctly.	None.

11 Network activity LED (green)

When an OCP module is installed, the network activity LED on the front I/O assembly helps you identify the network connectivity and activity. If no OCP module is installed, this LED is off.

Status	Color	Description
On	Green	The server is connected to a network.
Blinking	Green	The network is connected and active.
Off	None	The server is disconnected from the network. **Note:** If the network activity LED is off when an OCP module is installed, check the network ports in the rear of your server to determine which port is disconnected.

12 External diagnostics connector

The connector is for connecting an external diagnostics handset. See “External diagnostics handset” on page 398 for more details.

13 Rack release latches

If your server is installed in a rack, you can use the rack latches to help you slide the server out of the rack. You also can use the rack latches and screws to secure the server in the rack so that the server cannot slide out, especially in vibration-prone areas.

Front view of the sever model with E3.S 1T bays

This section contains information on the front view of the sever model with E3.S 1T bays.

Front view of the sever model with E3.S 1T bays

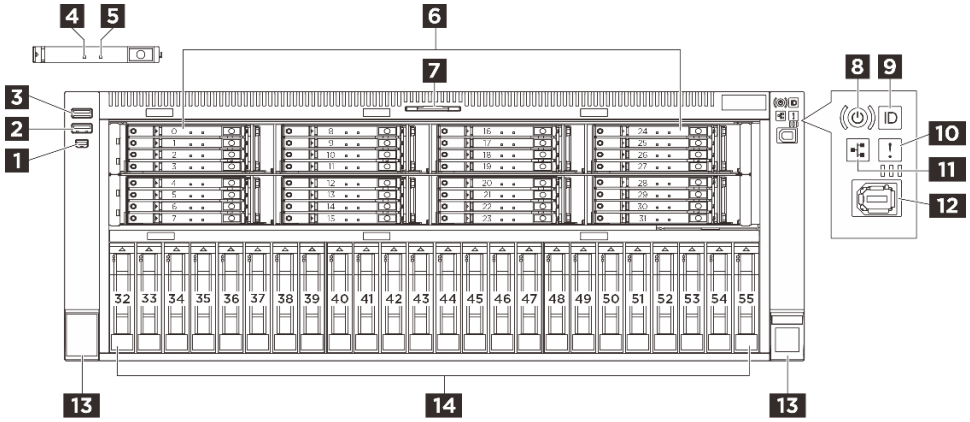

Figure 4. Front view of the sever model with E3.S 1T bays

1 Mini DisplayPort connector	2 USB 3.2 Gen 1 (5 Gbps) connector
3 USB 3.2 Gen 1 (5 Gbps) with connector USB2.0 XCC management	4 Drive status LED (yellow)
5 Drive activity LED (green)	6 E3.S bays
7 Pull-out information tab	8 Power button with LED (green)
9 System ID button with LED (blue)	10 System error LED (yellow)
11 Network activity LED (green)	12 External diagnostics connector
13 Rack release latches	14 2.5-inch drive bays

1 Mini DisplayPort connector

The Mini DisplayPort (MiniDP) connector can be used to attach a high-performance monitor and a direct-drive monitor with a video converter, or the devices that use a MiniDP connector.

2 USB 3.1 Gen 1 (5 Gbps) connector

The USB 3.1 Gen 1 (5 Gbps) connector can be used to attach a USB-compatible device, such as a USB keyboard, USB mouse, or USB storage device.

3 USB 3.2 Gen 1 (5 Gbps) with connector USB2.0 XCC management

The connector can function as a regular USB 3.2 Gen 1 connector to the host OS; it can be used to attach a USB-compatible device, such as a USB keyboard, USB mouse, or USB storage device.

In addition, the connector can function as a USB 2.0 Lenovo XClarity Controller management port.

4 5 E3.S drive LEDs

Each E3.S drive comes with an activity LED and a status LED.

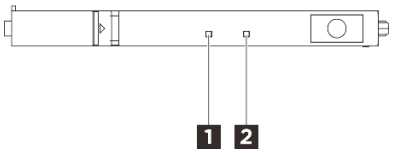

Figure 5. E3.S 1T drive LEDs

LED	Status	Description
1 Drive status LED (yellow)	Solid on	The drive has an error.
	Slow blinking (about one flash per second)	The drive is being rebuilt.
	Fast blinking (about three flashes per second)	The drive is being identified.
2 Drive activity LED (green)	Solid on	The drive is powered but not active.
	Blinking	The drive is being accessed (reading or writing data).

6 E3.S drive bays

The drive bays are used to install E3.S hot-swap drives. When you install drives, follow the order of the drive bay numbers. The EMI integrity and cooling of the server are protected by having all drive bays occupied. The vacant drive bays must be occupied by drive bay fillers or drive fillers.

7 Pull-out information tab

This tab contains network information such as MAC address and XCC network access label.

8 Power button with LED (green)

Press this button to turn the server on and off manually. The states of the power LED are as follows:

Status	Color	Description
Solid on	Green	The server is on and running.
Slow blinking (about one flash per second)	Green	The server is off and is ready to be powered on (standby state).
Fast blinking (about four flashes per second)	Green	• The server is off, but the XClarity Controller is initializing, and the server is not ready to be powered on. • System-board-assembly power has failed.
Off	None	Power is not present, or the power supply has failed.

9 System ID button with LED (blue)

Use this system ID button and the blue system ID LED to visually locate the server. A system ID LED is also located on the rear of the server. Each time you press the system ID button, the state of both the system ID LEDs changes. The LEDs can be changed to on, blinking, or off. You can also use the Lenovo XClarity

Controller or a remote management program to change the state of the system ID LEDs to assist in visually locating the server among other servers.

10 System error LED (yellow)

The system error LED helps you to determine if there are any system errors.

Status	Color	Description	Action
On	Amber	An error has been detected on the server. Causes might include but are not limited to the following errors: • The temperature of the server reached the non-critical temperature threshold. • The voltage of the server reached the non-critical voltage threshold. • A fan has been detected to be running at low speed. • A hot-swap fan has been removed. • The power supply has a critical error. • The power supply is not connected to the power. • A processor error. • A system I/O board or processor board error. • Abnormal status is detected on the Processor Neptune® Core Module.	• Check the Lenovo XClarity Controller event log and the system event log to determine the exact cause of the error. • Check if additional LEDs in the server are lit. It will direct you to the error source. See “Troubleshooting by system LEDs and diagnostics display” on page 397. • Save the log if necessary. **Note:** For server models with Processor Neptune® Core Module installed, it is required to open the top cover to check the LED status of the leakage detection sensor module. For more instructions, see “Leakage detection sensor module LED” on page 406.
Off	None	The server is off or the server is on and is working correctly.	None.

11 Network activity LED (green)

When an OCP module is installed, the network activity LED on the front I/O assembly helps you identify the network connectivity and activity. If no OCP module is installed, this LED is off.

Status	Color	Description
On	Green	The server is connected to a network.
Blinking	Green	The network is connected and active.
Off	None	The server is disconnected from the network. **Note:** If the network activity LED is off when an OCP module is installed, check the network ports in the rear of your server to determine which port is disconnected.

12 External diagnostics connector

The connector is for connecting an external diagnostics handset. See “External diagnostics handset” on page 398 for more details.

13 Rack release latches

If your server is installed in a rack, you can use the rack latches to help you slide the server out of the rack. You also can use the rack latches and screws to secure the server in the rack so that the server cannot slide out, especially in vibration-prone areas.

14 2.5-inch drive bays

The drive bays are used to install hot-swap 2.5-inch drives. When you install drives, follow the order of the drive bay numbers. The EMI integrity and cooling of the server are protected by having all drive bays occupied. The vacant drive bays must be occupied by drive bay fillers or drive fillers.

Front view of the sever model with E3.S 2T bays

This section contains information on the front view of the sever model with E3.S 2T bays for CXL memory modules (CMM).

Front view of the sever model with E3.S 2T bays

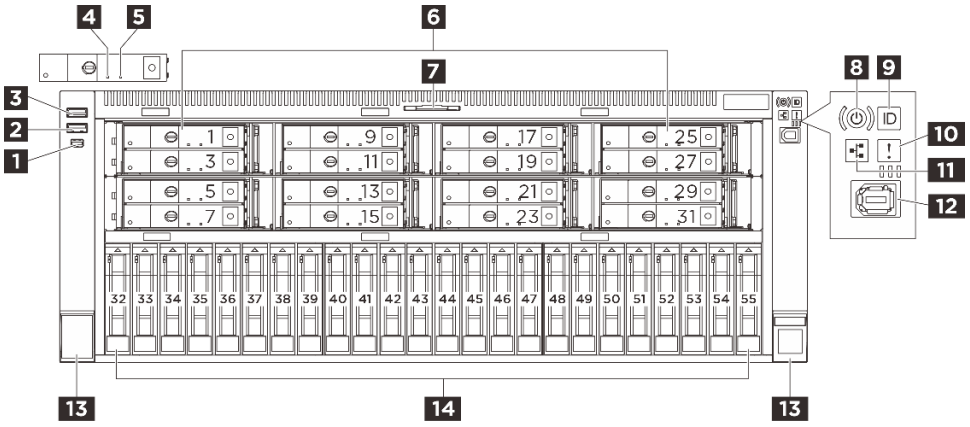

Figure 6. Front view of the sever model with E3.S 2T bays

1 Mini DisplayPort connector	2 USB 3.2 Gen 1 (5 Gbps) connector
3 USB 3.2 Gen 1 (5 Gbps) with connector USB2.0 XCC management	4 CMM fault LED (amber)
5 CMM health LED (white)	6 E3.S bays
7 Pull-out information tab	8 Power button with LED (green)
9 System ID button with LED (blue)	10 System error LED (yellow)
11 Network activity LED (green)	12 External diagnostics connector
13 Rack release latches	14 2.5-inch drive bays

1 Mini DisplayPort connector

The Mini DisplayPort (MiniDP) connector can be used to attach a high-performance monitor and a direct-drive monitor with a video converter, or the devices that use a MiniDP connector.

2 USB 3.1 Gen 1 (5 Gbps) connector

The USB 3.1 Gen 1 (5 Gbps) connector can be used to attach a USB-compatible device, such as a USB keyboard, USB mouse, or USB storage device.

3 USB 3.2 Gen 1 (5 Gbps) with connector USB2.0 XCC management

The connector can function as a regular USB 3.2 Gen 1 connector to the host OS; it can be used to attach a USB-compatible device, such as a USB keyboard, USB mouse, or USB storage device.

In addition, the connector can function as a USB 2.0 Lenovo XClarity Controller management port.

4 5 E3.S CMM LEDs

Each E3.S CMM comes with an activity LED and a status LED.

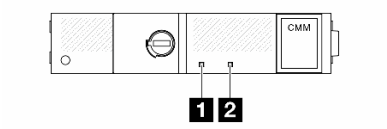

Figure 7. E3.S CMM LEDs

LED	Status	Description
1 Fault LED (amber)	Off	The CMM is healthy.
	On	The CMM is faulty.
2 Health LED (white)	On	The CMM is powered but not active. Removal is not permitted.
	Blinking	The CMM is active. Removal is not permitted.
	Off	The CMM is not powered. Removal is permitted.

6 E3.S bays

The drive bays are used to install non-hot-swap E3.S CXL memory modules (CMMs). When you install CMMs, follow the order of the bay numbers. The EMI integrity and cooling of the server are protected by having all E3.S bays occupied. The vacant bays must be occupied by drive bay fillers or drive fillers.

7 Pull-out information tab

This tab contains network information such as MAC address and XCC network access label.

8 Power button with LED (green)

Press this button to turn the server on and off manually. The states of the power LED are as follows:

Status	Color	Description
Solid on	Green	The server is on and running.
Slow blinking (about one flash per second)	Green	The server is off and is ready to be powered on (standby state).
Fast blinking (about four flashes per second)	Green	• The server is off, but the XClarity Controller is initializing, and the server is not ready to be powered on. • System-board-assembly power has failed.
Off	None	Power is not present, or the power supply has failed.

9 System ID button with LED (blue)

Use this system ID button and the blue system ID LED to visually locate the server. A system ID LED is also located on the rear of the server. Each time you press the system ID button, the state of both the system ID LEDs changes. The LEDs can be changed to on, blinking, or off. You can also use the Lenovo XClarity Controller or a remote management program to change the state of the system ID LEDs to assist in visually locating the server among other servers.

10 System error LED (yellow)

The system error LED helps you to determine if there are any system errors.

Status	Color	Description	Action
On	Amber	An error has been detected on the server. Causes might include but are not limited to the following errors: • The temperature of the server reached the non-critical temperature threshold. • The voltage of the server reached the non-critical voltage threshold. • A fan has been detected to be running at low speed. • A hot-swap fan has been removed. • The power supply has a critical error. • The power supply is not connected to the power. • A processor error. • A system I/O board or processor board error. • Abnormal status is detected on the Processor Neptune® Core Module.	• Check the Lenovo XClarity Controller event log and the system event log to determine the exact cause of the error. • Check if additional LEDs in the server are lit. It will direct you to the error source. See “Troubleshooting by system LEDs and diagnostics display” on page 397. • Save the log if necessary. **Note:** For server models with Processor Neptune® Core Module installed, it is required to open the top cover to check the LED status of the leakage detection sensor module. For more instructions, see “Leakage detection sensor module LED” on page 406.
Off	None	The server is off or the server is on and is working correctly.	None.

11 Network activity LED (green)

When an OCP module is installed, the network activity LED on the front I/O assembly helps you identify the network connectivity and activity. If no OCP module is installed, this LED is off.

Status	Color	Description
On	Green	The server is connected to a network.
Blinking	Green	The network is connected and active.
Off	None	The server is disconnected from the network. **Note:** If the network activity LED is off when an OCP module is installed, check the network ports in the rear of your server to determine which port is disconnected.

12 External diagnostics connector

The connector is for connecting an external diagnostics handset. See “External diagnostics handset” on page 398 for more details.

13 Rack release latches

If your server is installed in a rack, you can use the rack latches to help you slide the server out of the rack. You also can use the rack latches and screws to secure the server in the rack so that the server cannot slide out, especially in vibration-prone areas.

14 2.5-inch drive bays

The drive bays are used to install hot-swap 2.5-inch drives. When you install drives, follow the order of the drive bay numbers. The EMI integrity and cooling of the server are protected by having all drive bays occupied. The vacant drive bays must be occupied by drive bay fillers or drive fillers.

Rear view

The rear of the server provides access to several components, including the power supplies, PCIe adapters, serial port, and Ethernet ports.

Note: Depending on the configuration, your server might be slightly different from the image.

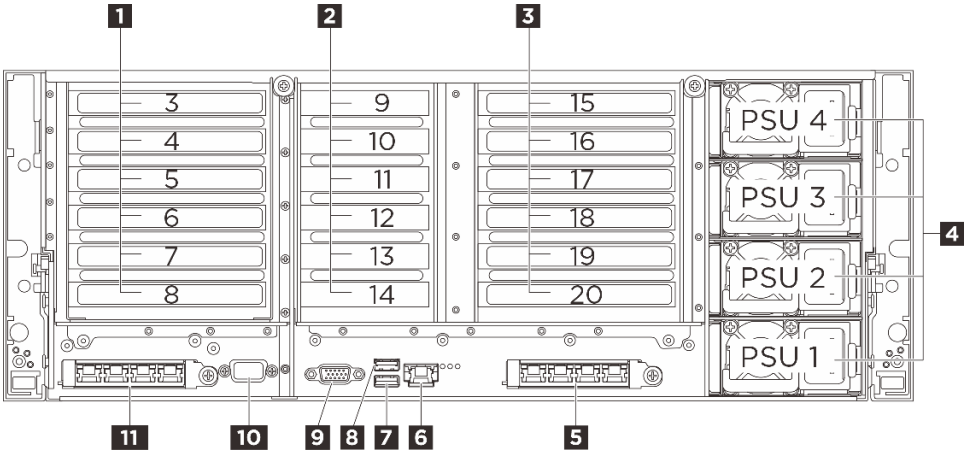

Figure 8. Rear view

1 PCIe riser 1 (PCIe slot 3-8)	2 PCIe riser 2 (PCIe slot 9-14)
3 PCIe riser 3 (PCIe slot 15-20)*	4 Power supply bays 1-4
5 OCP slot 2	6 XCC system management port (1 GB RJ-45)
7 USB 3.2 Gen 1 (5Gbps) connector with USB 2.0 XCC system management (depending on the configuration)	8 USB 3.2 Gen 1 (5 Gbps) connector
9 VGA connector	10 Serial port (optional)
11 OCP slot 1	

Note: An optional M.2 drive assembly can be installed on PCIe slot 15 or 20.

1 PCIe riser 1

See the following table for PCIe slots corresponding to the PCIe riser cards.

Table 3. PCIe riser 1 and corresponding PCIe slots

PCIe slot	x8x8 PCIe G4 riser card	x8x16x8x16x16x16 PCIe G5 riser card
Slot 3	N/A	x16 (Gen5 x8)
Slot 4	N/A	x16 (Gen5 x16)*
Slot 5	N/A	x16 (Gen4 x8)
Slot 6	N/A	x16 (Gen5 x16)*
Slot 7	x16 (Gen4 x8)	x16 (Gen5 x16)
Slot 8	x16 (Gen4 x8)	x16 (Gen5 x16)

Notes:

- * Slot 4 supports a double-wide GPU that occupies slot 3 and 4.
- * Slot 6 supports a double-wide GPU that occupies slot 5 and 6.

2 PCIe riser 2

See the following table for PCIe slots corresponding to the PCIe riser card.

Table 4. PCIe riser 2 and corresponding PCIe slots

PCIe slot	x8x8x8x8x8x8 PCIe G5 riser card
Slot 9	x16 (Gen5 x8)
Slot 10	x16 (Gen5 x8)
Slot 11	x16 (Gen5 x8)
Slot 12	x16 (Gen5 x8)
Slot 13	x16 (Gen5 x8)
Slot 14	x16 (Gen5 x8)

3 PCIe riser 3

See the following table for PCIe slots corresponding to the PCIe riser cards.

Table 5. PCIe riser 3 and corresponding PCIe slots

PCIe slot	x8x8 PCIe G4 riser card		x8x16x8x16x16x16 PCIe G5 riser card	
Slot 15	N/A	M.2 drive bays (optional)	x16 (Gen5 x8)	x16 (Gen5 x8)
Slot 16	N/A	N/A	x16 (Gen5 x16)*	x16 (Gen5 x16)*
Slot 17	N/A	N/A	x16 (Gen4 x8)	x16 (Gen4 x8)
Slot 18	N/A	N/A	x16 (Gen5 x16)*	x16 (Gen5 x16)*
Slot 19	x16 (Gen4 x8)	x16 (Gen4 x8)	x16 (Gen5 x16)	x16 (Gen5 x16)
Slot 20	x16 (Gen4 x8)	x16 (Gen4 x8)	x16 (Gen5 x16)	M.2 drive bays (optional)

Notes:

- * Slot 16 supports a double-wide GPU that occupies slot 15 and 16.
- * Slot 18 supports a double-wide GPU that occupies slot 17 and 18.

4 Power supply bays 1-4 (bottom to top)

Install power supply units to these bays, connect them to power cords. Make sure the power cords are connected properly. See “Technical specifications” on page 3 for the power supplies supported by this system.

For information about the LEDs, see “Power supply LEDs” on page 411.

5 11 OCP slots

The system may support a 2-port or a 4-port OCP module for network connections. Port numbering is shown in the illustrations below.

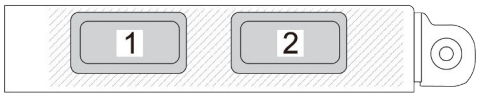

Figure 9. Port numbering — 2-port OCP module

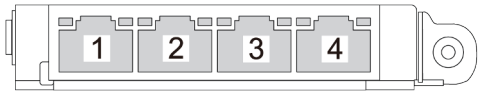

Figure 10. Port numbering — 4-port OCP 3.0 module

6 XCC system management port (1 GB RJ-45)

The server has a 1 GB RJ-45 connector dedicated to Lenovo XClarity Controller (XCC) functions. Through the system management port, you can access the Lenovo XClarity Controller directly by connecting your laptop to the management port using an Ethernet cable. Make sure that you modify the IP settings on the laptop so that it is on the same network as the server default settings. A dedicated management network provides additional security by physically separating the management network traffic from the production network.

See the following for more information:

- "Set the network connection for the Lenovo XClarity Controller" on page 385
- "XCC system management port LEDs" on page 414

7 USB 3.2 Gen 1 (5Gbps) connector with USB 2.0 XCC system management (depending on the configuration)

The connector can function as a regular USB 3.2 Gen 1 connector to the host OS; it can be used to attach a USB-compatible device, such as a USB keyboard, USB mouse, or USB storage device.

When there are no USB connectors at the front, this connector can function as a USB 2.0 Lenovo XClarity Controller management port.

8 USB 3.2 Gen 1 (5 Gbps) connectors

The connector can be used to attach a USB-compatible device, such as a USB keyboard, USB mouse, or USB storage device.

9 VGA connector

Connect a monitor to this connector.

10 Serial port (optional)

Connect a 9-pin serial device to this connector. The serial port is shared with XCC. XCC can take control of the shared serial port to redirect serial traffic, using Serial over LAN (SOL).

Rear LEDs

This topic provides information about LEDs on the rear of the server.

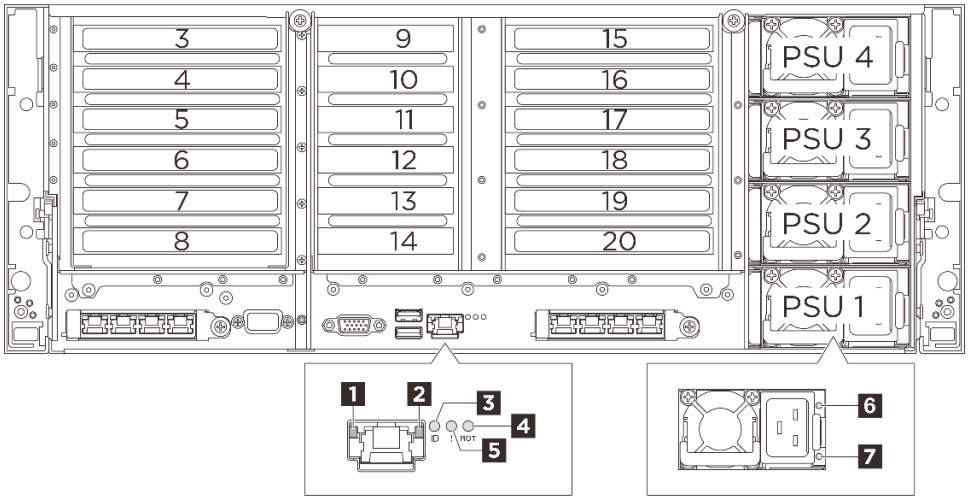

Figure 11. Rear LEDs

Table 6. LEDs on the rear view

LED	Description
1 Link LED of XCC system management port (green)	See “XCC system management port LEDs” on page 414 for more information.
2 Activity LED of XCC system management port (green)	
3 System ID LED (blue)	See “System I/O board LEDs” on page 408 for more information.
4 System error LED (yellow)	
5 RoT fault LED (yellow)	
6 7 PSU LEDs	See “Power supply LEDs” on page 411 for more information.

Top view

This section contains information on the top view of the server.

The following illustration shows the top view of the server with half-length PCIe risers installed.

Note: Depending on the server model and configuration, your server might be slightly different from the image.

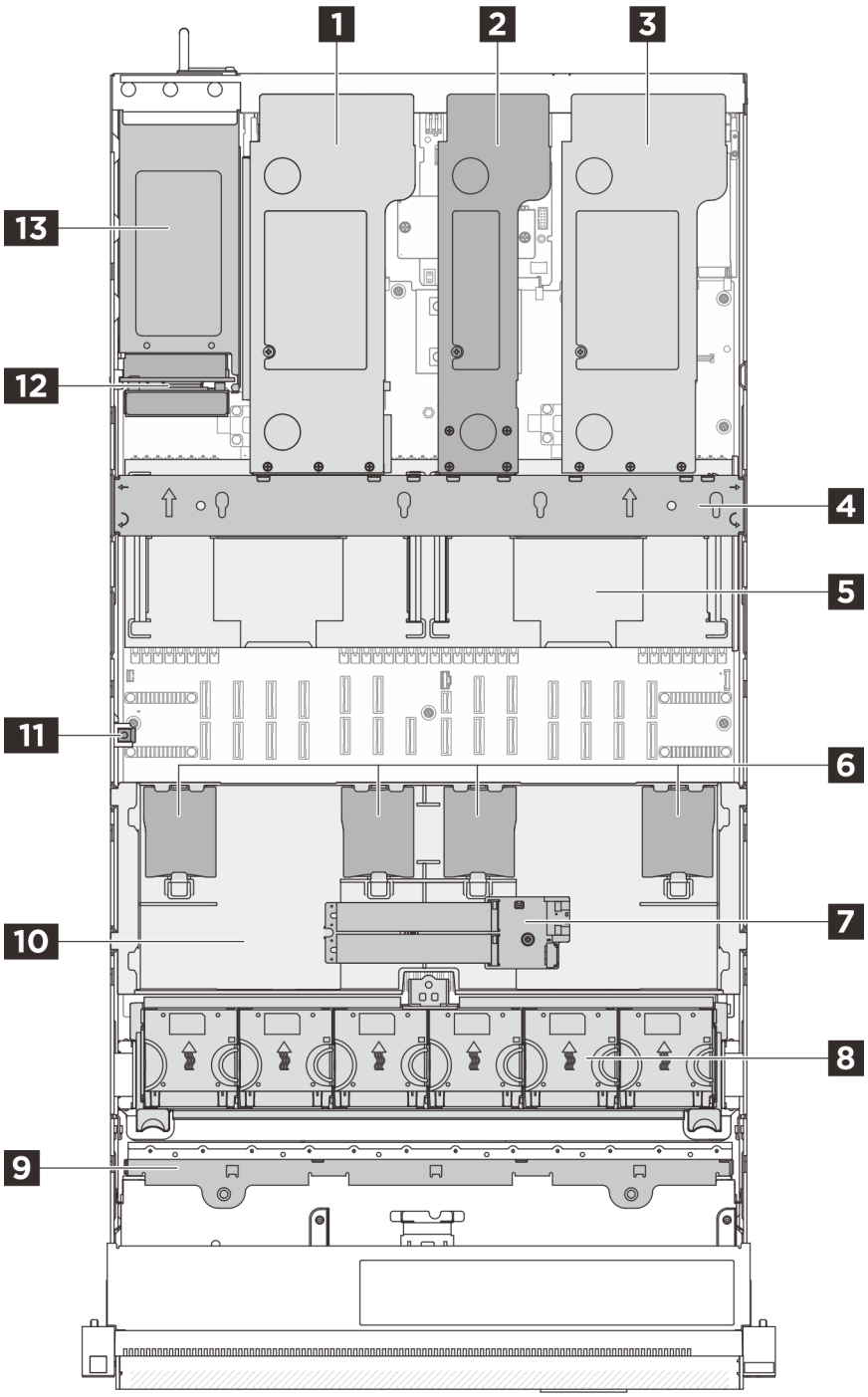

1 PCIe riser 3

2 PCIe riser 2

3 PCIe riser 1

4 Crossbar

5 Rear air baffle

6 RAID flash power modules

7 M.2 boot adapter

8 Fans and fan cages

9 Drive backplanes

10 Front air baffle

11 Intrusion switch

12 Power distribution board (PDB)

13 Power supplies

Figure 12. Server top view

System-board-assembly layout

The illustrations in this section provide information about the connectors, switches, and jumpers that are available on the system board assembly.

The following illustration shows the layout of the system board assembly which contains the system I/O board (DC-SCM) and processor board.

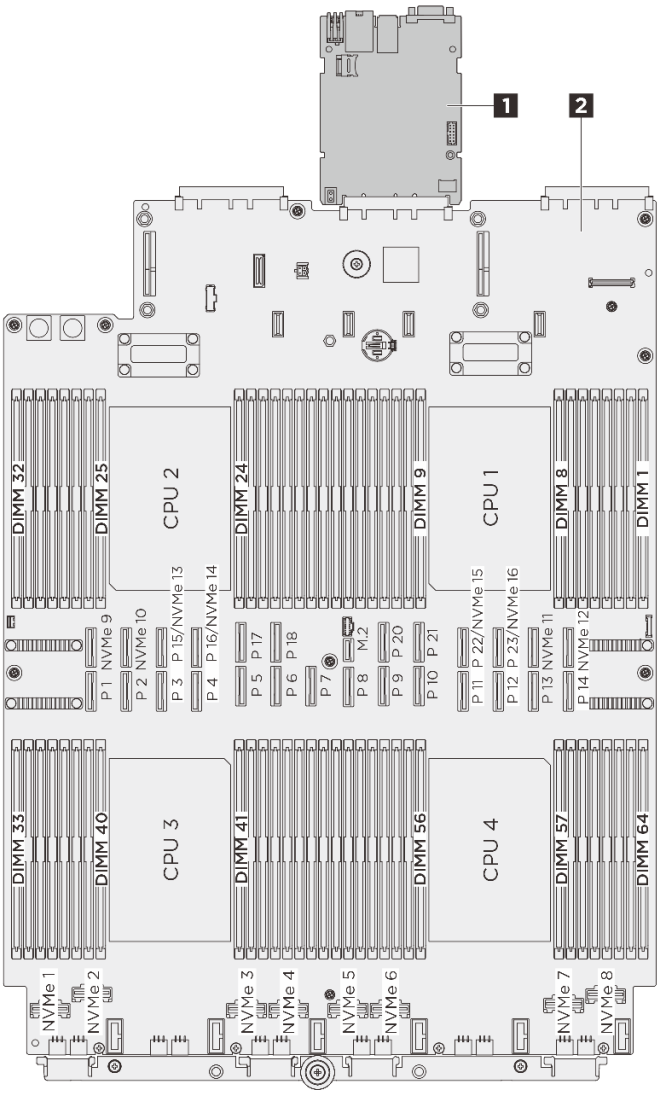

Figure 13. System-board-assembly layout

1 System I/O board (DC-SCM)	2 Processor board

For more information about the LEDs that are available on the system board assembly, see “Processor board LEDs” on page 407.

System-board-assembly connectors

The following illustrations show the internal connectors on the system board assembly.

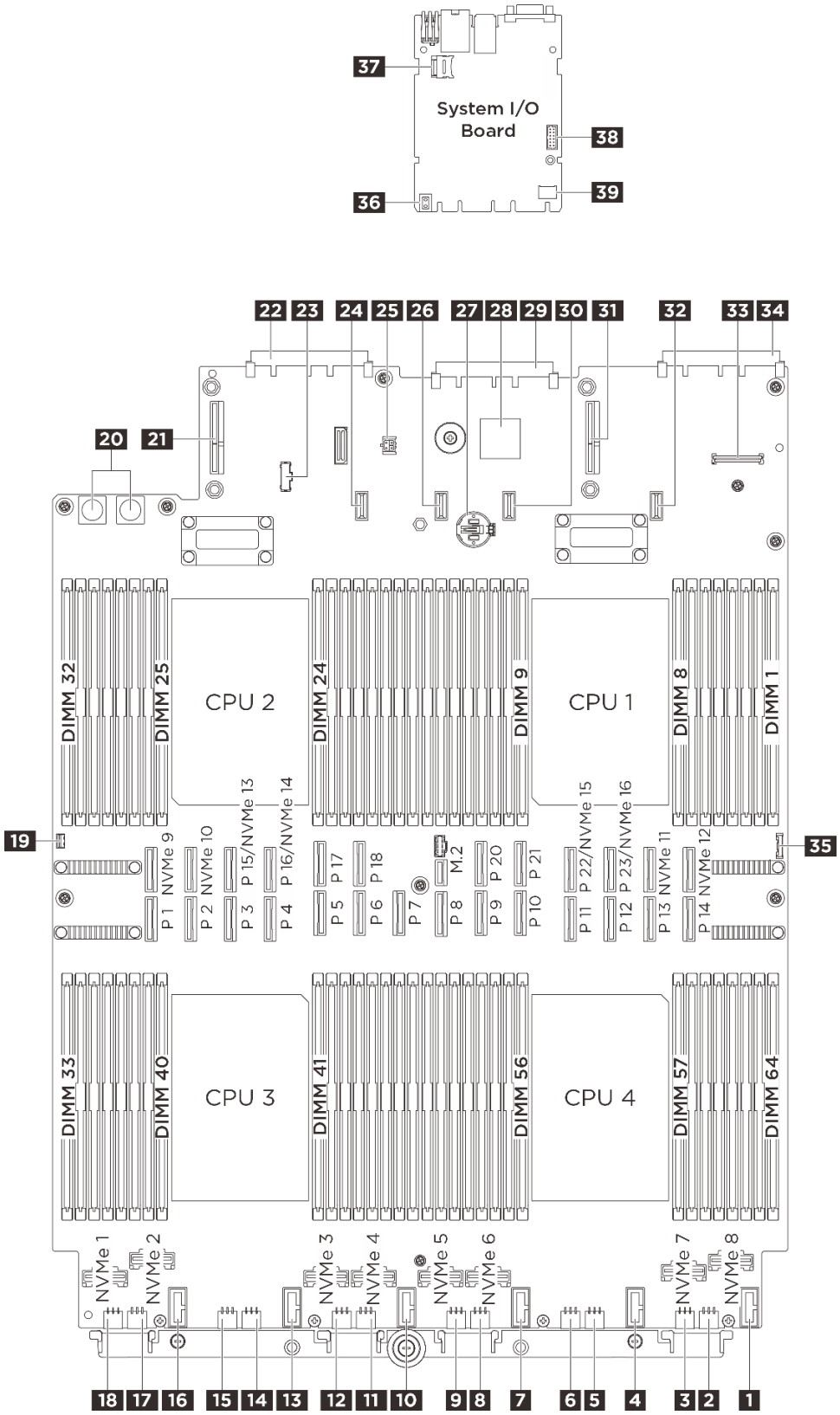

Figure 14. System-board-assembly connectors

Table 7. System-board-assembly connectors

1 Fan 6 connector	2 Backplane 12 power connector
3 Backplane 11 power connector	4 Fan 5 connector
5 Backplane 10 power connector	6 Backplane 9 power connector
7 Fan 4 connector	8 Backplane 8 power connector
9 Backplane 7 power connector	10 Fan 3 connector
11 Backplane 6 power connector	12 Backplane 5 power connector
13 Fan 2 connector	14 Backplane 4 power connector
15 Backplane 3 power connector	16 Fan 1 connector
17 Backplane 2 power connector	18 Backplane 1 power connector
19 Intrusion switch connector	20 PDB power connector
21 Riser 3 power connector	22 OCP slot 2 connector
23 PDB sideband connector	24 Riser C power connector (reserved)
25 Leakage sensor connector	26 Riser 2 power connector
27 3V battery (CR2032)	28 FPGA
29 System I/O board connector	30 Riser B power connector (reserved)
31 Riser 1 power connector	32 Riser A power connector (reserved)
33 Front panel USB connector	34 OCP slot 1 connector
35 Front I/O connector	36 Lift handle
37 MicroSD socket	38 Serial port connector
39 TCM connector	

System-board-assembly switches

The following illustrations show the location of the switches, jumpers, and buttons on the server.

Important:

1. Before you change any switch settings or move any jumpers, turn off the server; then, disconnect all power cords and external cables. Review the following information:
   - https://pubs.lenovo.com/safety_documentation/
   - “Installation Guidelines” on page 45
   - “Handling static-sensitive devices” on page 48
   - “Power off the server” on page 61
2. Any system-board-assembly switch or jumper block that is not shown in the illustrations in this document are reserved.

Note: If there is a clear protective sticker on the top of the switch blocks, remove and discard it to access the switches.

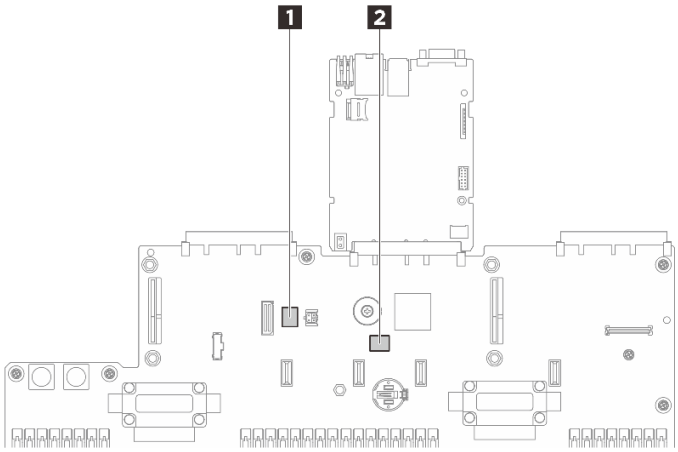

Figure 15. System-board-assembly switches

1 SW3	2 SW621

SW3 switch block

The following table describes the functions of the SW3 switch block on the system board assembly.

Table 8. System-board-assembly SW3 switch block description

Switch number	Default position	Description
1	Off	Reserved
2	Off	Reserved
3	Off	Reserved
4	Off	Clears the real-time clock (RTC) registry when switched to ON.

SW621 switch block

The following table describes the functions of the SW621 switch block on the system board assembly.

Table 9. System-board-assembly SW621 switch block description

Switch number	Default position	Description
1	Off	Reserved
2	Off	Reserved
3	Off	Reserved
4	Off	Bypasses the power-on password when switched to ON.

System LEDs and diagnostics display

See the following section for information on available system LEDs and diagnostics display.

For more information, refer to “Troubleshooting by system LEDs and diagnostics display” on page 397.

Chapter 3. Parts list

Identify each of the components that is available for your server with the parts list.

For more information about ordering parts:

1. Go to **http://datacentersupport.lenovo.com** and navigate to the support page for your server.
2. Click **Parts**.
3. Enter the serial number to view a listing of parts for your server.

It is highly recommended that you check the power summary data for your server using Lenovo Capacity Planner before purchasing any new parts.

Note: Depending on the model, your server might look slightly different from the illustration.

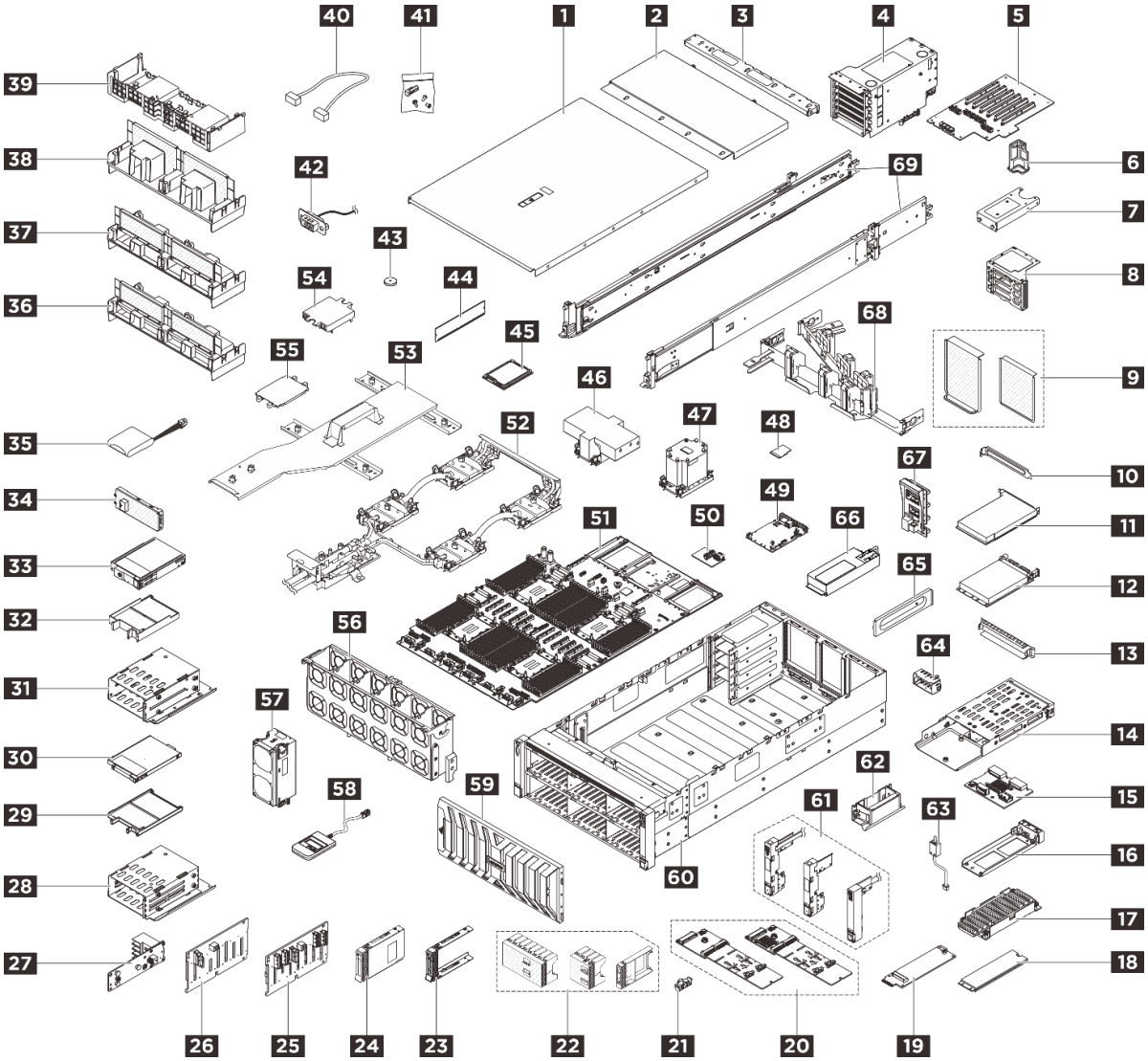

Figure 16. Server components

© Copyright Lenovo 2025

The parts listed in the following table are identified as one of the following:

- **T1:** Tier 1 customer replaceable unit (CRU). Replacement of Tier 1 CRUs is your responsibility. If Lenovo installs a Tier 1 CRU at your request with no service agreement, you will be charged for the installation.
- **T2:** Tier 2 customer replaceable unit (CRU). You may install a Tier 2 CRU yourself or request Lenovo to install it, at no additional charge, under the type of warranty service that is designated for your server.
- **F:** Field replaceable unit (FRU). FRUs must be installed only by trained service technicians.
- **C:** Consumable and Structural parts. Purchase and replacement of consumable and structural parts (components, such as a filler or bezel) is your responsibility. If Lenovo acquires or installs a structural component at your request, you will be charged for the service.

Index	Description	Type	Index	Description	Type
For more information about ordering parts: 1. Go to **http://datacentersupport.lenovo.com** and navigate to the support page for your server. 2. Click **Parts**. 3. Enter the serial number to view a listing of parts for your server.					
1	Front top cover	T1	2	Rear top cover	T1
3	Crossbar	T1	4	PCIe riser cage	T1
5	PCIe riser card	T2	6	PCIe riser cable retainer	T1
7	Riser cage extender (half height)	T2	8	Riser cage extender (full height)	T2
9	Riser cage filler	C	10	PCIe adapter bracket filler	C
11	PCIe adapter	T1/ T2*	12	OCP module	T1
13	OCP module filler	C	14	Rear M.2 drive cage	T1
15	Rear M.2 boot adapter	T2	16	Rear M.2 drive tray	T1
17	M.2 heat sink	F	18	M.2 drive	T1
19	M.2 interposer	T2	20	Internal M.2 boot adapter	T2
21	M.2 retainer	T1	22	2.5-inch drive filler	C
23	2.5-inch drive tray	T1	24	2.5-inch drive	T1
25	2.5-inch AnyBay drive backplane	T2	26	2.5-inch SAS/SATA drive backplane	T2
27	E3.S backplane	T2	28	E3.S 1T drive cage	T2
29	E3.S 1T drive filler	C	30	E3.S 1T drive	T1
31	E3.S 2T drive cage	T2	32	E3.S 2T drive filler	C
33	E3.S 2T CMM	T1	34	E3.S bezel	C
35	RAID flash power module (supercap)	T1	36	Rear air baffle with sponge (liquid cooling)	T1
37	Rear air baffle (2U performance PHM)	T1	38	Rear air baffle (3U standard PHM)	T1
39	Front air baffle	T1	40	Cable	T1
41	Miscellaneous parts kit (screws, labels, or fillers)	T1	42	Serial port module	T1
43	CMOS battery (CR2032)	C	44	Memory module	T2
45	Processor	F	46	2U performance heat sink	F

Index	Description	Type	Index	Description	Type
47	3U standard heat sink	F	48	MicroSD card	T1
49	System I/O board (DC-SCM)	F	50	USB I/O board	T1
51	Processor board	F	52	Processor Neptune® Core Module	F
53	Water loop shipping bracket	T1	54	Cold plate cover	T1
55	Processor socket cover	C	56	Fan cage	T1
57	Fan	T1	58	External diagnostics handset	T1
59	Security bezel	C	60	Chassis	F
61	Rack latch	T1	62	Chassis lift handle	T1
63	Intrusion switch	T1	64	Power supply filler	C
65	Power supply bracket	T1	66	Power supply	T1
67	PDB board	T1	68	Cable management arm	T1
69	Rail kit	T2			

Notes: *CRU type for PCIe adapter:

- PCIe Ethernet adapters: T1
- PCIe RAID/HBA adapters: T2

Power cords

Several power cords are available, depending on the country and region where the server is installed.

To view the power cords that are available for the server:

1. Go to:

   http://dcsc.lenovo.com/#/
2. Click **Preconfigured Model** or **Configure to order**.
3. Enter the machine type and model for your server to display the configurator page.
4. Click **Power → Power Cables** to see all line cords.

Notes:

- For your safety, a power cord with a grounded attachment plug is provided to use with this product. To avoid electrical shock, always use the power cord and plug with a properly grounded outlet.
- Power cords for this product that are used in the United States and Canada are listed by Underwriter's Laboratories (UL) and certified by the Canadian Standards Association (CSA).
- For units intended to be operated at 115 volts: Use a UL-listed and CSA-certified cord set consisting of a minimum 18 AWG, Type SVT or SJT, three-conductor cord, a maximum of 15 feet in length and a parallel blade, grounding-type attachment plug rated 15 amperes, 125 volts.
- For units intended to be operated at 230 volts (U.S. use): Use a UL-listed and CSA-certified cord set consisting of a minimum 18 AWG, Type SVT or SJT, three-conductor cord, a maximum of 15 feet in length and a tandem blade, grounding-type attachment plug rated 15 amperes, 250 volts.
- For units intended to be operated at 230 volts (outside the U.S.): Use a cord set with a grounding-type attachment plug. The cord set should have the appropriate safety approvals for the country in which the equipment will be installed.

- Power cords for a specific country or region are usually available only in that country or region.

Chapter 4. Unboxing and setup

Information in this section assists you on unboxing and setting up the server. When unboxing the server, check if the items in the package are correct, and learn where to find information of server serial number and Lenovo XClarity Controller access. Make sure to follow the instructions in “Server setup checklist” on page 43 when setting up the server.

Server package contents

When you receive your server, verify that the shipment contains everything that you expected to receive.

The server package includes the following items:

- Server
- Rail installation kit*. Installation guide is provided in the package.
- Cable management arm*. Installation guide is provided in the package.
- Material box, including items such as lift handles*, power cords*, accessory kit, and printed documents.

Notes:

- Some of the items listed are available on select models only.
- Items marked with asterisk (*) are optional.

If any item is missing or damaged, contact your place of purchase. Ensure that you retain your proof of purchase and packing material. They might be required to receive warranty service.

Identify the server and access the Lenovo XClarity Controller

This section contains instruction on how to identify your server and where to find the Lenovo XClarity Controller access information.

Identifying your server

When you contact Lenovo for help, the machine type, model, and serial number information help support technicians to identify your server and provide faster service.

The illustration below shows the location of the ID label which contains the model number, machine type, and serial number of the server.

© Copyright Lenovo 2025

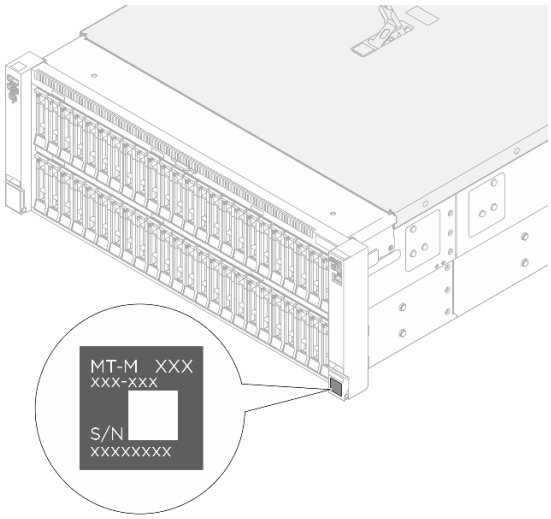

Figure 17. Location of the ID label

Lenovo XClarity Controller network access label

The Lenovo XClarity Controller network access label is attached to the pull-out information tab in the front of the chassis, with MAC address accessible with a pull.

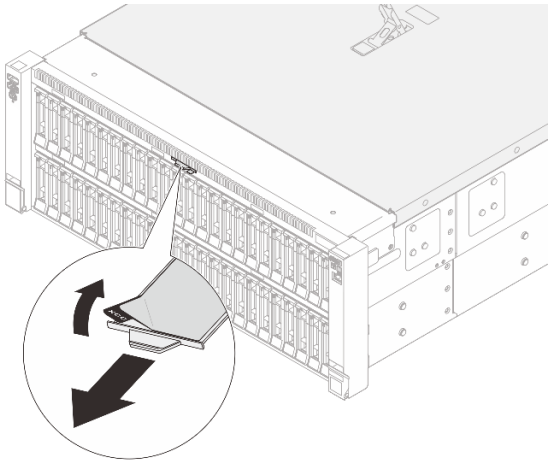

Figure 18. Lenovo XClarity Controller network access label on the pull-out information tab

Service information and QR code

On the inside surface of the front top cover, there is a quick response (QR) code that provides mobile access to service information. You can scan the QR code with a mobile device using a QR code reader application and get quick access to the Service Information web page. The Service Information web page provides additional information for parts installation and replacement videos, and error codes for server support.

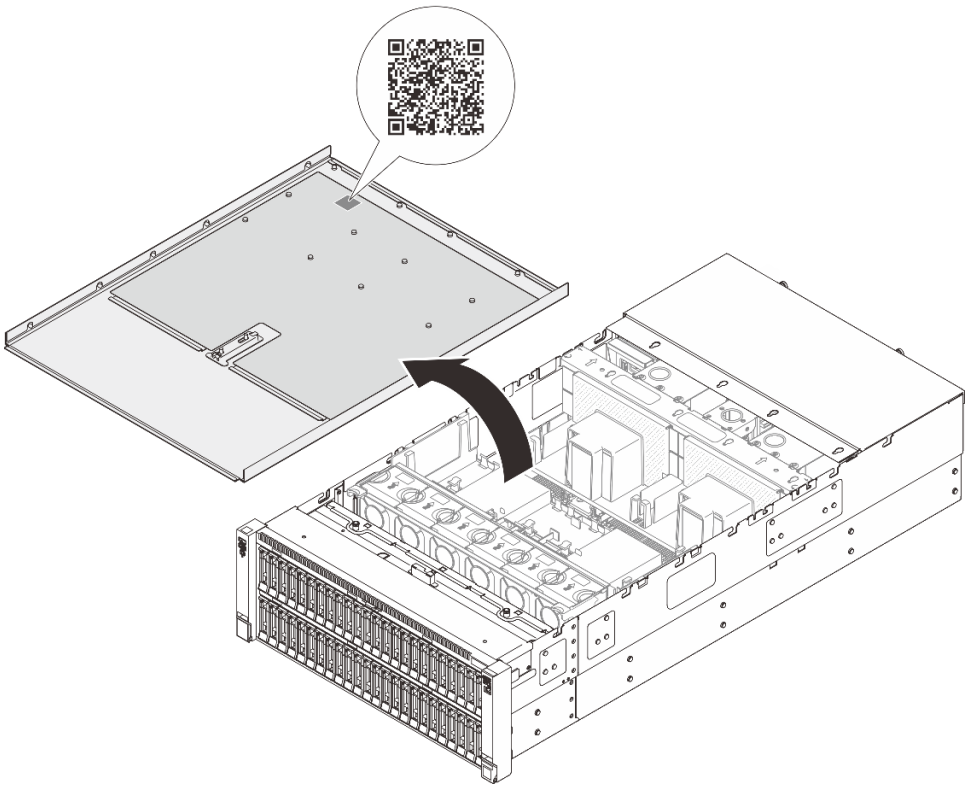

Figure 19. Service information and QR code

Server setup checklist

Use the server setup checklist to ensure that you have performed all tasks that are required to set up your server.

The server setup procedure varies depending on the configuration of the server when it was delivered. In some cases, the server is fully configured and you just need to connect the server to the network and an AC power source, and then you can power on the server. In other cases, the server needs to have hardware options installed, requires hardware and firmware configuration, and requires an operating system to be installed.

The following steps describe the general procedure for setting up a server.

Setup the server hardware

Complete the following procedures to setup the server hardware.

1. Unpack the server package. See “Server package contents” on page 41.
2. Install any required hardware or server options. See the related topics in Chapter 5 “Hardware replacement procedures” on page 45.
3. If necessary, install the rail and CMA to a standard rack cabinet. Follow the instruction in *Rail Installation Guide* and *CMA Installation Guide* that comes with the rail installation kit.
4. If necessary, install the server into a standard rack cabinet. See “Install the server to the rack (2.5-inch bay chassis)” on page 74.
5. Connect all external cables to the server. See Chapter 2 “Server components” on page 19 for connectors locations.

   Typically, you will need to connect the following cables:

- Connect server to the power source
- Connect server to the data network
- Connect the server to the storage device
- Connect the server to the management network

6. Power on the server.

   Power button location and power LED are specified in:

   - Chapter 2 “Server components” on page 19
   - “Troubleshooting by system LEDs and diagnostics display” on page 397

   The server can be turned on (power LED on) in any of the following ways:

   - You can press the power button.
   - The server can restart automatically after a power interruption.
   - The server can respond to remote power-on requests sent to the Lenovo XClarity Controller.

   Note: You can access the management processor interface to configure the system without powering on the server. Whenever the server is connected to power, the management processor interface is available. For details about accessing the management server processor, see “Opening and Using the XClarity Controller Web Interface” section in the XCC documentation compatible with your server at https://pubs.lenovo.com/lxcc-overview/.

7. Validate the server. Make sure that the power LED, Ethernet connector LED, and network LED are lit with green light, which means the server hardware was set up successfully.

   See “Troubleshooting by system LEDs and diagnostics display” on page 397 for more information on the LED indications.

Configure the system

Complete the following procedures to configure the system. For detailed instructions, refer to Chapter 6 “System configuration” on page 385.

1. Set the network connection for the Lenovo XClarity Controller to the management network.
2. Update the firmware for the server, if necessary.
3. Configure the firmware for the server.

   The following information is available for RAID configuration:

   - https://lenovopress.lenovo.com/lp0578-lenovo-raid-introduction
   - https://lenovopress.lenovo.com/lp0579-lenovo-raid-management-tools-and-resources

4. Install the operating system.
5. Back up the server configuration.
6. Install the applications and programs for which the server is intended to be used.

Chapter 5. Hardware replacement procedures

This section provides installation and removal procedures for all serviceable system components. Each component replacement procedure references any tasks that need to be performed to gain access to the component being replaced.

Installation Guidelines

Before installing components in your server, read the installation guidelines.

Before installing optional devices, read the following notices carefully:

Attention: Prevent exposure to static electricity, which might lead to system halt and loss of data, by keeping static-sensitive components in their static-protective packages until installation, and handling these devices with an electrostatic-discharge wrist strap or other grounding system.

- Read the safety information and guidelines to ensure your safety at work:
  - A complete list of safety information for all products is available at:

    https://pubs.lenovo.com/safety_documentation/
  - The following guidelines are available as well: “Working inside the server with the power on” on page 48 and “Handling static-sensitive devices” on page 48.
- Make sure the components you are installing are supported by your server.
  - For a list of supported optional components for the server, see https://serverproven.lenovo.com.
  - For the option package contents, see https://serveroption.lenovo.com/.
- For more information about ordering parts:
  1. Go to **http://datacentersupport.lenovo.com** and navigate to the support page for your server.
  2. Click **Parts**.
  3. Enter the serial number to view a listing of parts for your server.
- When you install a new server, download and apply the latest firmware. This will help ensure that any known issues are addressed, and that your server is ready to work with optimal performance. Go to https://datacentersupport.lenovo.com/products/servers/thinksystem/sr860v4/7djn/downloads/driver-list to download firmware updates for your server.

  Important: Some cluster solutions require specific code levels or coordinated code updates. If the component is part of a cluster solution, verify the latest Best Recipe code level menu for cluster supported firmware and driver before you update the code.
- If you replace a part, such as an adapter, that contains firmware, you might also need to update the firmware for that part. For more information about updating firmware, see “Update the firmware” on page 386.
- It is good practice to make sure that the server is working correctly before you install an optional component.
- Keep the working area clean, and place removed components on a flat and smooth surface that does not shake or tilt.
- Do not attempt to lift an object that might be too heavy for you. If you have to lift a heavy object, read the following precautions carefully:
  - Make sure that you can stand steadily without slipping.
  - Distribute the weight of the object equally between your feet.

© Copyright Lenovo 2025

  - Use a slow lifting force. Never move suddenly or twist when you lift a heavy object.
  - To avoid straining the muscles in your back, lift by standing or by pushing up with your leg muscles.
- Back up all important data before you make changes related to the disk drives.
- Have a small flat-blade screwdriver, a small Phillips screwdriver, and a T8 torx screwdriver available.
- To view the error LEDs on the system board (system board assembly) and internal components, leave the power on.
- You do not have to turn off the server to remove or install hot-swap power supplies, hot swap fans, or hot-plug USB devices. However, you must turn off the server before you perform any steps that involve removing or installing adapter cables, and you must disconnect the power source from the server before you perform any steps that involve removing or installing a riser card.
- When replacing power supply units or fans, make sure to refer to redundancy rules for these components.
- Blue on a component indicates touch points, where you can grip to remove a component from or install it in the server, open or close a latch, and so on.
- Except PSU, orange on a component or an orange on or near a component indicates that the component can be hot-swapped if the server and operating system support hot-swap capability, which means that you can remove or install the component while the server is still running. (Orange can also indicate touch points on hot-swap components.) See the instructions for removing or installing a specific hot-swap component for any additional procedures that you might have to perform before you remove or install the component.
- PSU with a release tab is a hot-swap PSU.
- The Red strip on the drives, adjacent to the release latch, indicates that the drive can be hot-swapped if the server and operating system support hot-swap capability. This means that you can remove or install the drive while the server is still running.

  Note: See the system specific instructions for removing or installing a hot-swap drive for any additional procedures that you might need to perform before you remove or install the drive.
- After finishing working on the server, make sure you reinstall all safety shields, guards, labels, and ground wires.

Safety inspection checklist

Use the information in this section to identify potentially unsafe conditions with your server. As each machine was designed and built, required safety items were installed to protect users and service technicians from injury.

Note: The product is not suitable for use at visual display workplaces according to §2 of the Workplace Regulations.

Note: The set-up of the server is made in the server room only.

CAUTION:
This equipment must be installed or serviced by trained personnel, as defined by the NEC, IEC 62368-1 & IEC 60950-1, the standard for Safety of Electronic Equipment within the Field of Audio/Video, Information Technology and Communication Technology. Lenovo assumes you are qualified in the servicing of equipment and trained in recognizing hazards energy levels in products. Access to the equipment is by the use of a tool, lock and key, or other means of security, and is controlled by the authority responsible for the location.

Important: Electrical grounding of the server is required for operator safety and correct system function. Proper grounding of the electrical outlet can be verified by a certified electrician.

Use the following checklist to verify that there are no potentially unsafe conditions:

1. Make sure that the power is off and the power cord is disconnected.
2. Check the power cord.
   - Make sure that the third-wire ground connector is in good condition. Use a meter to measure third-wire ground continuity for 0.1 ohm or less between the external ground pin and the frame ground.
   - Make sure that the power cord is the correct type.

     To view the power cords that are available for the server:

     a. Go to:

        http://dcsc.lenovo.com/#/

     b. Click **Preconfigured Model** or **Configure to order**.

     c. Enter the machine type and model for your server to display the configurator page.

     d. Click **Power → Power Cables** to see all line cords.
   - Make sure that the insulation is not frayed or worn.
3. Check for any obvious non-Lenovo alterations. Use good judgment as to the safety of any non-Lenovo alterations.
4. Check inside the server for any obvious unsafe conditions, such as metal filings, contamination, water or other liquid, or signs of fire or smoke damage.
5. Check for worn, frayed, or pinched cables.
6. Make sure that the power-supply cover fasteners (screws or rivets) have not been removed or tampered with.
7. The design of the electrical distribution system must take into consideration the total grounding leakage current from all power supplies in the server.

   CAUTION:

   

   High touch current. Connect to earth before connecting to supply.

System reliability guidelines

Review the system reliability guidelines to ensure proper system cooling and reliability.

Make sure the following requirements are met:

- A power supply must be installed in each power-supply bay.
- Adequate space around the server must be spared to allow server cooling system to work properly. Leave approximately 50 mm (2.0 in.) of open space around the front and rear of the server. Do not place any object in front of the fans.
- For proper cooling and airflow, refit the server cover before you turn the power on. Do not operate the server for more than 30 minutes with the server cover removed, for it might damage server components.
- Cabling instructions that come with optional components must be followed.
- A failed fan must be replaced within 48 hours after malfunction.
- A removed hot-swap fan must be replaced within 30 seconds after removal.
- A removed hot-swap drive must be replaced within two minutes after removal.
- A removed hot-swap power supply must be replaced within two minutes after removal.

- Every air baffle that comes with the server must be installed when the server starts (some servers might come with more than one air baffle). Operating the server with a missing air baffle might damage the processor.
- All processor sockets must contain either a socket cover or a processor with heat sink.
- When more than one processor is installed, fan population rules for each server must be strictly followed.

Working inside the server with the power on

You might need to keep the power on with the server cover removed to look at system information on the display panel or to replace hot-swap components. Review these guidelines before doing so.

Attention: The server might stop and data loss might occur when internal server components are exposed to static electricity. To avoid this potential problem, always use an electrostatic-discharge wrist strap or other grounding systems when working inside the server with the power on.

- Avoid loose-fitting clothing, particularly around your forearms. Button or roll up long sleeves before working inside the server.
- Prevent your necktie, scarf, badge rope, or hair from dangling into the server.
- Remove jewelry, such as bracelets, necklaces, rings, cuff links, and wrist watches.
- Remove items from your shirt pocket, such as pens and pencils, in case they fall into the server as you lean over it.
- Avoid dropping any metallic objects, such as paper clips, hairpins, and screws, into the server.

Handling static-sensitive devices

Review these guidelines before you handle static-sensitive devices to reduce the possibility of damage from electrostatic discharge.

Attention: Prevent exposure to static electricity, which might lead to system halt and loss of data, by keeping static-sensitive components in their static-protective packages until installation, and handling these devices with an electrostatic-discharge wrist strap or other grounding system.

- Limit your movement to prevent building up static electricity around you.
- Take additional care when handling devices during cold weather, for heating would reduce indoor humidity and increase static electricity.
- Always use an electrostatic-discharge wrist strap or other grounding system, particularly when working inside the server with the power on.
- While the device is still in its static-protective package, touch it to an unpainted metal surface on the outside of the server for at least two seconds. This drains static electricity from the package and from your body.
- Remove the device from the package and install it directly into the server without putting it down. If it is necessary to put the device down, put it back into the static-protective package. Never place the device on the server or on any metal surface.
- When handling a device, carefully hold it by the edges or the frame.
- Do not touch solder joints, pins, or exposed circuitry.
- Keep the device from others' reach to prevent possible damages.

Memory module installation rules and order

Memory modules must be installed in a specific order based on the memory configuration that you implement and the number of processors and memory modules installed in the server.

Supported memory types

For information on the types of memory module supported by this server, see “Memory” section in “Technical specifications” on page 3.

Information about optimizing memory performance and configuring memory is available at the Lenovo Press website:

https://lenovopress.lenovo.com/servers/options/memory

In addition, you can take advantage of a memory configurator, which is available at the following site:

https://dcsc.lenovo.com/#/memory_configuration

Specific information about the required installation order of memory modules in your server based on the system configuration and memory mode that you are implementing is shown below.

Memory modules and processors layout

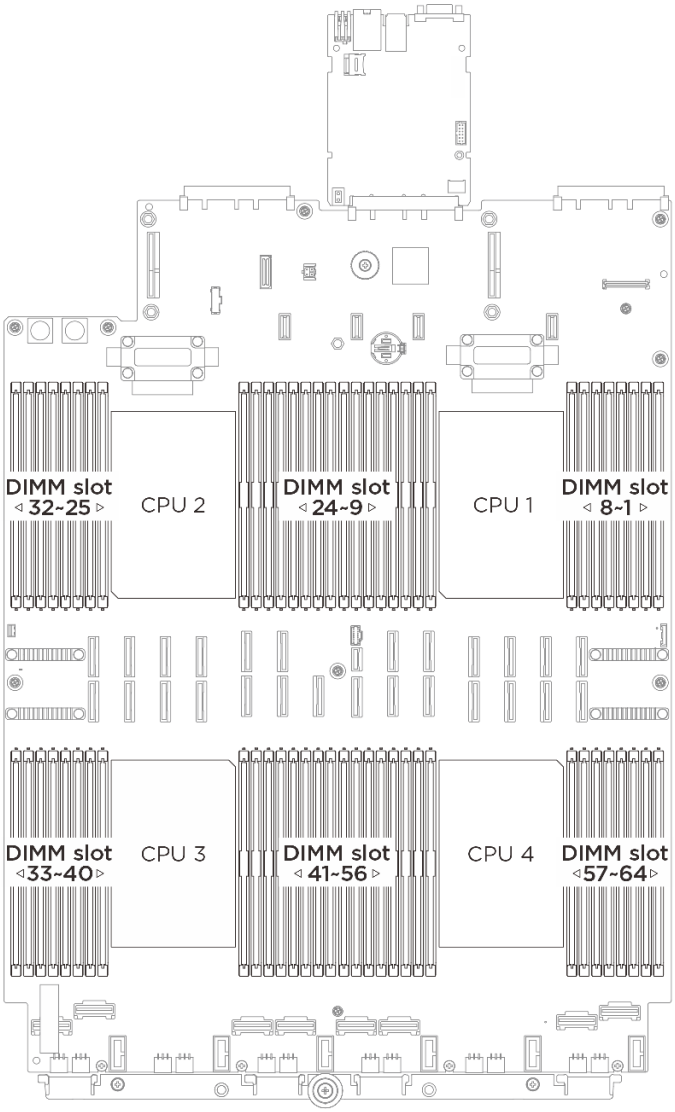

Figure 20. Memory modules and processors layout

The memory-channel configuration table below shows the relationship between the processors, memory controllers, memory channels, and memory module slot numbers.

Table 10. Memory slot and channel identification

Processor	**CPU 1**															
Controller	iMC3		iMC2		iMC1		iMC0		iMC4		iMC5		iMC6		iMC7	
Channel	CH3		CH2		CH2		CH0		CH4		CH5		CH6		CH7	
Slot No.	0	1	0	1	0	1	0	1	1	0	1	0	1	0	1	0
DIMM No.	16	15	14	13	12	11	10	9	8	7	6	5	4	3	2	1
Processor	**CPU 2**															
Controller	iMC3		iMC2		iMC1		iMC0		iMC4		iMC5		iMC6		iMC7	
Channel	CH3		CH2		CH2		CH0		CH4		CH5		CH6		CH7	
Slot No.	0	1	0	1	0	1	0	1	1	0	1	0	1	0	1	0
DIMM No.	32	31	30	29	28	27	26	25	24	23	22	21	20	19	18	17
Processor	**CPU 3**															
Controller	iMC7		iMC6		iMC5		iMC4		iMC0		iMC1		iMC2		iMC3	
Channel	CH7		CH6		CH5		CH4		CH0		CH1		CH2		CH3	
Slot No.	0	1	0	1	0	1	0	1	1	0	1	0	1	0	1	0
DIMM No.	33	34	35	36	37	38	39	40	41	42	43	44	45	46	47	48
Processor	**CPU 4**															
Controller	iMC7		iMC6		iMC5		iMC4		iMC0		iMC1		iMC2		iMC3	
Channel	CH7		CH6		CH5		CH4		CH0		CH1		CH2		CH3	
Slot No.	0	1	0	1	0	1	0	1	1	0	1	0	1	0	1	0
DIMM No.	49	50	51	52	53	54	55	56	57	58	59	60	61	62	63	64

Memory module installation guideline

- At least one DIMM is required for each processor. Install at least eight DIMMs per processor for good performance.
- When you replace a DIMM, the server provides automatic DIMM enablement capability without requiring you to use the Setup Utility to enable the new DIMM manually.

RDIMM independent memory mode installation order

Independent memory mode provides the highest level of memory performance, but lacks failover protection. The DIMM installation order for independent memory mode varies based on the number of processors and memory modules installed in the server.

Memory installation guidelines

- At least one DIMM is required for each processor.
- Memory population must be identical between processors.
- If only one DIMM is used per channel, it must be placed in the farthest slot (slot 0) from the CPU.
- All DDR5 DIMMs installed must be of the same type, capacity, density, rank, and data width.
- All DDR5 DIMMs must operate at the same speed in the same system.

With two processors

The following table shows the sequence of populating memory modules for independent mode when two processors are installed.

Table 11. Independent mode with two processors

Total DIMMs	Processor 1															
	16	**15**	**14**	**13**	**12**	**11**	**10**	**9**	**8**	**7**	**6**	**5**	**4**	**3**	**2**	**1**
2 DIMMs							10									
8 DIMMs[3]			14				10			7				3		
8 DIMMs[opt., 3]	16				12							5				1
16 DIMMs[3, 4]	16		14		12		10			7		5		3		1
32 DIMMs[3, 4]	16	15	14	13	12	11	10	9	8	7	6	5	4	3	2	1
Total DIMMs	**Processor 2**															
	32	**31**	**30**	**29**	**28**	**27**	**26**	**25**	**24**	**23**	**22**	**21**	**20**	**19**	**18**	**17**
2 DIMMs							26									
8 DIMMs[3]			30				26			23				19		
8 DIMMs[opt., 3]	32				28							21				17
16 DIMMs[3, 4]	32		30		28		26			23		21		19		17
32 DIMMs[3, 4]	32	31	30	29	28	27	26	25	24	23	22	21	20	19	18	17

Notes:

1. Supported DIMM capacities and types vary depending on the total number of DIMMs installed:
   - 2 DIMMs: 32 GB or 64 GB RDIMMs
   - 8 DIMMs: 64 GB RDIMMs
   - 16 DIMMs: 64/96/128 GB RDIMMs or 256 GB 3DS RDIMMs
   - 32 DIMMs: 64/96/128 GB RDIMMs or 256 GB 3DS RDIMMs

   All DIMMs populated must be of the same type and the same capacity.
2. [opt.]: An optional installation order for the DIMM configuration. For optimal performance, you are recommended to install DIMMs in the standard installation order. The optional installation order is used only for special requirements.
3. DIMM configurations that support the Sub NUMA Clustering (SNC) feature, which can be enabled via UEFI. SNC is not supported if DIMM population does not follow the sequence indicated by the table above.
4. DIMM configurations that support Software Guard Extensions (SGX), see "Enable Software Guard Extensions (SGX)" on page 391 to enable this feature.

With four processors

The following table shows the sequence of populating memory modules for independent mode when four processors are installed.

Table 12. Independent mode with four processors

Total DIMMs	Processor 1															
	16	**15**	**14**	**13**	**12**	**11**	**10**	**9**	**8**	**7**	**6**	**5**	**4**	**3**	**2**	**1**
4 DIMMs							10									

Table 12. Independent mode with four processors (continued)

16 DIMMs[3]			14				10			7				3		
16 DIMMs[opt., 3]	16				12							5				1
32 DIMMs[3, 4]	16		14		12		10			7		5		3		1
64 DIMMs[3, 4]	16	15	14	13	12	11	10	9	8	7	6	5	4	3	2	1
Total DIMMs	**Processor 2**															
	32	**31**	**30**	**29**	**28**	**27**	**26**	**25**	**24**	**23**	**22**	**21**	**20**	**19**	**18**	**17**
4 DIMMs							26									
16 DIMMs[3]			30				26			23				19		
16 DIMMs[opt., 3]	32				28							21				17
32 DIMMs[3, 4]	32		30		28		26			23		21		19		17
64 DIMMs[3, 4]	32	31	30	29	28	27	26	25	24	23	22	21	20	19	18	17
Total DIMMs	**Processor 3**															
	33	**34**	**35**	**36**	**37**	**38**	**39**	**40**	**41**	**42**	**43**	**44**	**45**	**46**	**47**	**48**
4 DIMMs										42						
16 DIMMs[3]			35				39			42				46		
16 DIMMs[opt., 3]	33				37							44				48
32 DIMMs[3, 4]	33		35		37		39			42		44		46		48
64 DIMMs[3, 4]	33	34	35	36	37	38	39	40	41	42	43	44	45	46	47	48
Total DIMMs	**Processor 4**															
	49	**50**	**51**	**52**	**53**	**54**	**55**	**56**	**57**	**58**	**59**	**60**	**61**	**62**	**63**	**64**
4 DIMMs										58						
16 DIMMs[3]			51				55			58				62		
16 DIMMs[opt., 3]	49				53							60				64
32 DIMMs[3, 4]	49		51		53		55			58		60		62		64
64 DIMMs[3, 4]	49	50	51	52	53	54	55	56	57	58	59	60	61	62	63	64

Notes:

1. Supported DIMM capacities and types vary depending on the total number of DIMMs installed:
   - 4 DIMMs: 32 GB or 64 GB RDIMMs
   - 16 DIMMs: 64 GB RDIMMs
   - 32 DIMMs: 32/64/96/128 GB RDIMMs or 256 GB 3DS RDIMMs
   - 64 DIMMs: 32/64/96/128 GB RDIMMs or 256 GB 3DS RDIMMs

   All DIMMs populated must be of the same type and the same capacity.
2. opt.: An optional installation order for the DIMM configuration. For optimal performance, you are recommended to install DIMMs in the standard installation order. The optional installation order is used only for special requirements.
3. DIMM configurations that support the Sub NUMA Clustering (SNC) feature, which can be enabled via UEFI. SNC is not supported if DIMM population does not follow the sequence indicated by the table above.

4. DIMM configurations that support Software Guard Extensions (SGX), see “Enable Software Guard Extensions (SGX)” on page 391 to enable this feature.

RDIMM memory mirroring mode installation order

Memory-mirroring mode provides full memory redundancy while reducing the total system memory capacity in half. Memory channels are grouped in pairs with each channel receiving the same data. If a failure occurs, the memory controller switches from the DIMMs on the primary channel to the DIMMs on the backup channel. The DIMM installation order for memory mirroring varies based on the number of processors and DIMMs installed in the server.

Memory mirroring guidelines

- Memory mirroring is supported between two memory controllers within a cluster.
- Mirroring is only supported for adjacent IMC pairs (e.g., IMC 0 & 1, IMC 2 & 3, etc.). Mirroring is not supported for non-adjacent IMC pairs (e.g., IMC 1 & 2).
- Mirroring is restricted to a pair of channels (i.e., two channels). Three-channel mirroring is not supported.
- The BIOS must configure one IMC in the pair as the primary and the other as the secondary.
- Mirroring is supported in 1LM mode.
- Mirrored memory regions must have identical densities and capacities (i.e., same size and type).

With two processors

The following table shows the DIMM population sequence for memory mirroring mode when two processors are installed.

Table 13. Memory mirroring with two processors

Total DIMMs	**Processor 1**															
	16	**15**	**14**	**13**	**12**	**11**	**10**	**9**	**8**	**7**	**6**	**5**	**4**	**3**	**2**	**1**
16 DIMMs	16		14		12		10			7		5		3		1
32 DIMMs	16	15	14	13	12	11	10	9	8	7	6	5	4	3	2	1
Total DIMMs	**Processor 2**															
	32	**31**	**30**	**29**	**28**	**27**	**26**	**25**	**24**	**23**	**22**	**21**	**20**	**19**	**18**	**17**
16 DIMMs	32		30		28		26			23		21		19		17
32 DIMMs	32	31	30	29	28	27	26	25	24	23	22	21	20	19	18	17

Notes:
- Supported DIMM capacities and types:
  - 16 DIMMs: 64/96/128 GB RDIMMs or 256 GB 3DS RDIMMs
  - 32 DIMMs: 64/96/128 GB RDIMMs or 256 GB 3DS RDIMMs

  All DIMMs populated must be of the same type and the same capacity.
- DIMM configurations that support the Sub NUMA Clustering (SNC) feature, which can be enabled via UEFI. SNC is not supported if DIMM population does not follow the sequence indicated by the table above.

With four processors

The following table shows the DIMM population sequence for memory mirroring mode when four processors are installed.

Table 14. Memory mirroring with four processors

Total DIMMs	**Processor 1**															
	16	**15**	**14**	**13**	**12**	**11**	**10**	**9**	**8**	**7**	**6**	**5**	**4**	**3**	**2**	**1**

Table 14. Memory mirroring with four processors (continued)

32 DIMMs	16		14		12		10			7		5		3		1
64 DIMMs	16	15	14	13	12	11	10	9	8	7	6	5	4	3	2	1
Total DIMMs	**Processor 2**															
	32	**31**	**30**	**29**	**28**	**27**	**26**	**25**	**24**	**23**	**22**	**21**	**20**	**19**	**18**	**17**
32 DIMMs	32		30		28		26			23		21		19		17
64 DIMMs	32	31	30	29	28	27	26	25	24	23	22	21	20	19	18	17
Total DIMMs	**Processor 3**															
	33	**34**	**35**	**36**	**37**	**38**	**39**	**40**	**41**	**42**	**43**	**44**	**45**	**46**	**47**	**48**
32 DIMMs	33		35		37		39			42		44		46		48
64 DIMMs	33	34	35	36	37	38	39	40	41	42	43	44	45	46	47	48
Total DIMMs	**Processor 4**															
	49	**50**	**51**	**52**	**53**	**54**	**55**	**56**	**57**	**58**	**59**	**60**	**61**	**62**	**63**	**64**
32 DIMMs	49		51		53		55			58		60		62		64
64 DIMMs	49	50	51	52	53	54	55	56	57	58	59	60	61	62	63	64

Notes:
- Supported DIMM capacities and types:
  - 32 DIMMs: 32/64/96/128 GB RDIMMs or 256 GB 3DS RDIMMs
  - 64 DIMMs: 32/64/96/128 GB RDIMMs or 256 GB 3DS RDIMMs

  All DIMMs populated must be of the same type and the same capacity.
- DIMM configurations that support the Sub NUMA Clustering (SNC) feature, which can be enabled via UEFI. SNC is not supported if DIMM population does not follow the sequence indicated by the table above.

RDIMM and CMM installation order

This section provides information about the installation order of DDR5 RDIMMs mixed with CXL memory modules (CMMs).

Memory installation guidelines

- CMMs are only supported in server configurations with **four** processors.
- CMM channel: number of devices per root port, with root ports separated by “+”, e.g. 2+2+2+2 = four root ports populated with two devices per root port
- CMM modes:
  - 1LM+Vol = Native DDR5 (1LM) and (volatile) CMM visible to software (SW) as separate tiers, separately interleaved
  - Hetero x12 = DDR5 and (volatile) CMM interleaved together in one 12-way set

    Note: The Hetero mode is not supported with LCC processors. For specific models of LCC processors, see the “Processors” section in https://lenovopress.lenovo.com/.
- To set the CMM mode, go to **UEFI Setup → System Settings → Memory → CXL Memory Module → Memory Mode**.

Table 15. Installation rule for each processor

DDR5 RDIMMs per socket				CMM per socket		
Total DIMMs	**Slot 0**	**Slot 1**	**RDIMM mode**	**CMM mode**	**Total CMMs**	**CMM channels**
8 x 96 GB (2Rx4)	√	N/A	Independent/Mirroring	1LM+Vol	4 x 96 GB	2+2
8 x 128 GB (2Rx4)	√	N/A	Independent/Mirroring	1LM+Vol	4 x 128 GB	2+2
8 x 128 GB (2Rx4)	√	N/A	Independent	Hetero	4 x 128 GB	2+2

Drive backplane installation rules and order

This section contains information on the drive backplane installation rules and order.

Server models with 2.5-inch drive bays

The server supports up to six 2.5-inch drive backplanes.

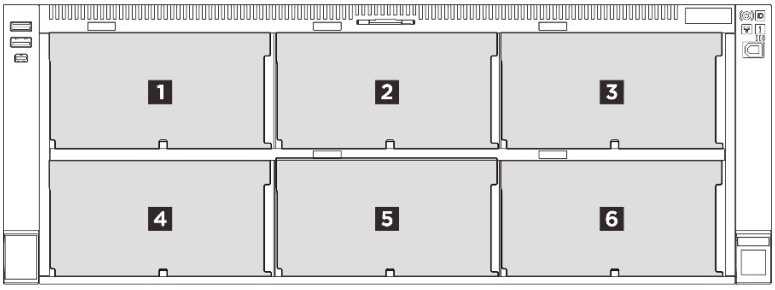

Figure 21. Backplane numbering

Table 16. Drive backplane and corresponding drive bays

Drive backplane	Drive bay	Supported drive backplanes	Supported drives
1 Backplane 1	0 to 7	• 2.5-inch AnyBay 8-bay drive backplane • 2.5-inch SAS/SATA 8-bay drive backplane	• 2.5-inch NVMe drives • 2.5-inch SAS/SATA drives
2 Backplane 2	8 to 15		
3 Backplane 3	16 to 23		
4 Backplane 4	24 to 31	• 2.5-inch SAS/SATA 8-bay drive backplane	• 2.5-inch SAS/SATA drives
5 Backplane 5	32 to 39		
6 Backplane 6	40 to 47		

Note: The AnyBay backplane currently supports NVMe drives only. Support for SAS/SATA drives or NVMe + SAS/SATA drives will be enabled via a firmware update in Q4 of 2025.

Table 17. Drive backplane installation order

Installation priority	Backplane type	Backplane placement priority
1	2.5-inch AnyBay 8-bay drive backplane	1, 3, 2
2	2.5-inch SAS/SATA 8-bay drive backplane	1, 2, 3, 4, 5, 6

Notes: The server supports the following backplane combinations:

- 1 backplane: 1 x SAS/SATA backplane or 1 x AnyBay backplane
- 2 backplanes: 2 x SAS/SATA backplanes, 2 x AnyBay backplanes, or combination of both
- 3 backplanes: 3 x SAS/SATA backplanes, 3 x AnyBay backplanes, or combinations of both
- 6 backplanes: 6 x SAS/SATA backplanes, or combinations of both

  A maximum of 3 AnyBay backplanes are supported.

Server models with E3.S bays

The server supports up to eight E3.S backplanes (backplanes 1 to 8) and three 2.5-inch drive backplanes (backplanes 9 to 11).

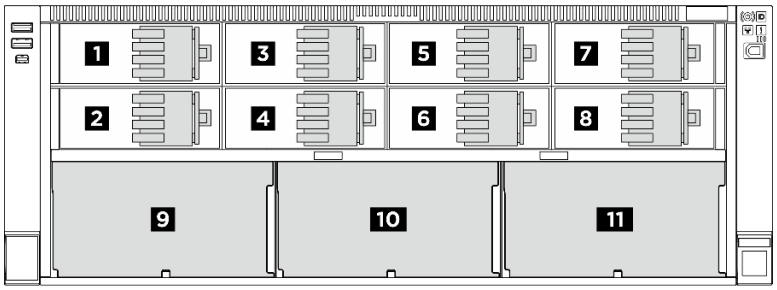

Figure 22. Backplane numbering

Table 18. Drive backplane and corresponding drive bays

Drive backplane	E3.S 1T bay	E3.S 2T bay	2.5-inch SAS/SATA bay
1 Backplane 1	0 to 3	1, 3	
2 Backplane 2	4 to 7	5, 7	
3 Backplane 3	8 to 11	9, 11	
4 Backplane 4	12 to 15	13, 15	
5 Backplane 5	16 to 19	17, 19	
6 Backplane 6	20 to 23	21, 23	
7 Backplane 7	24 to 27	25, 27	
8 Backplane 8	28 to 31	29, 31	
9 Backplane 9			32 to 39
10 Backplane 10			40 to 47
11 Backplane 11			48 to 55

Notes:
- E3.S 1T bays support E3.S 1T drives.
- E3.S 2T bays support CXL memory modules (CMMs).

Table 19. Drive backplane installation order

Backplane type	Backplane placement priority
E3.S backplane for E3.S 1T bays	1+2, 1+2+3+4, 1+2+3+4+5+6, 1+2+3+4+5+6+7+8
E3.S backplane for E3.S 2T bays	1+2+3+4+5+6+7+8
2.5-inch SAS/SATA 8-bay drive backplane	9, 10, 11

PCIe riser and adapter installation rules and order

PCIe risers and adapters must be installed in a specific order in your server.

The following illustration shows the server rear view with PCIe slots numbering.

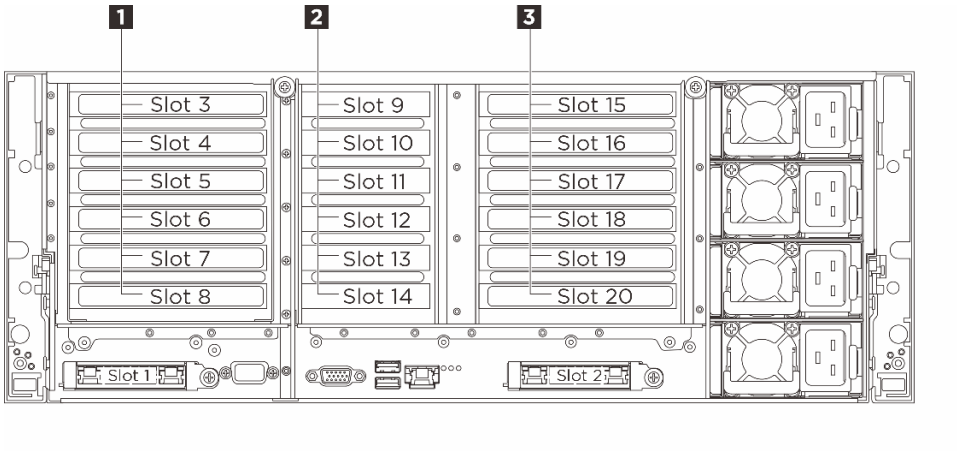

Figure 23. PCIe slots

The available PCIe slots depend on the riser and number of processors installed.
- Riser card A: x8x8 PCIe G4 riser card
- Riser card B: x8x16x8x16x16x16 PCIe G5 riser card
- Riser card C: x8x8x8x8x8x8 PCIe G5 riser card

Table 20. PCIe slot availability

Processor installed	1 Riser 1 (A or B)	2 Riser 2 (C)	3 Riser 3 (A or B)
Two processors	• A: slots 7, 8 • B: slots 3, 6, 8	• slots 11, 14	• A: slots 19, 20 • B: slots 15, 18, 20
Four processors	• A: slots 7, 8 • B: slots 3, 4, 5, 6, 7, 8	• slots 9, 10, 11, 12, 13, 14	• A: slots 19, 20 • B: slots 15, 16, 17, 18, 19, 20

Notes:
- PCIe slot 20 on riser card B is unavailable when an M.2 drive assembly is installed.
- PCIe slots 6 and 18 are unavailable for server models with E3.S bays.
- Riser 2 is unavailable when the Processor Neptune® Core Module is installed.
- PCIe slots 5 and 17 are unavailable for server models with E3.S bays and Processor Neptune® Core Module.
- Performance may degrade when a x16 PCIe card is installed in a x8 lane PCIe slot.

PCIe riser installation rules and order

Installation priority	PCIe riser card type	Riser location priority
1	x8x8 PCIe G4 riser card (with M.2 drive bays)	Riser 3
2	x8x16x8x16x16x16 PCIe G5 riser card (with M.2 drive bays)	Riser 3
3	x8x16x8x16x16x16 PCIe G5 riser card	Riser 3, then riser 1
4	x8x8 PCIe G4 riser card	Riser 3, then riser 1
5	x8x8x8x8x8x8 PCIe G5 riser card	Riser 2

PCIe adapter installation rules and order

The following table lists the recommended slot installation priority for common PCIe adapters.

Installation priority	Component	PCIe slot priority
1	1. 16i RAID adapter 2. 16i HBA adapter 3. 8i RAID adapter	20, 8, 14, 11, 12, 18, 6, 15, 19
2	ThinkSystem NVIDIA ConnectX-7 NDR400 OSFP 1-Port PCIe Gen5 Adapter	7, 19, 18, 6, 16, 4
3	Double-wide GPU	18, 6, 16, 4
	Single-wide GPU	18, 6, 16, 4, 3, 15, 5, 17
4	• ThinkSystem Broadcom 57504 10/25GbE SFP28 4-Port PCIe Ethernet Adapter • ThinkSystem Mellanox ConnectX-6 Dx 100GbE QSFP56 2-port PCIe Ethernet Adapter • ThinkSystem Nvidia ConnectX-7 NDR200/HDR QSFP112 2-Port PCIe Gen5 x16 InfiniBand Adapter • ThinkSystem Nvidia ConnectX-7 10/25GbE SFP28 4-Port PCIe Ethernet Adapter(Generic)	20, 8, 18, 6, 16, 4, 19, 7
5	• ThinkSystem Broadcom 5719 1GbE RJ45 4-Port PCIe Ethernet Adapter • ThinkSystem QLogic QLE2772 32Gb 2-Port PCIe Fibre Channel Adapter • ThinkSystem Mellanox ConnectX-6 Lx 10/25GbE SFP28 2-Port PCIe Ethernet Adapter • ThinkSystem QLogic QLE2872 64Gb 2-Port PCIe Fibre Channel Adapter(Generic FW) • ThinkSystem Emulex LPe38102 64Gb 2-port PCIe Fibre Channel Adapter • ThinkSystem Emulex LPe37102 32Gb 2-port PCIe Fibre Channel Adapter • ThinkSystem Intel E610-T4 10GBASE-T 4-port PCIe Ethernet Adapter(Generic FW)	20, 8, 14, 11, 18, 6, 19, 12, 13, 7, 9, 10, 16, 4, 15, 3, 17, 5
6	External HBA adapter	20, 8, 14, 11, 18, 6, 19, 12, 13, 7, 9, 10, 16, 4, 15, 3, 17, 5
7	OCP module	1, 2

Power on and power off the server

Follow the instructions in this section to power on and power off the server.

Power on the server

After the server performs a short self-test (power status LED flashes quickly) when connected to input power, it enters a standby state (power status LED flashes once per second).

Power button location and power LED are specified in:

- Chapter 2 “Server components” on page 19
- “Troubleshooting by system LEDs and diagnostics display” on page 397

The server can be turned on (power LED on) in any of the following ways:

- You can press the power button.
- The server can restart automatically after a power interruption.
- The server can respond to remote power-on requests sent to the Lenovo XClarity Controller.

For information about powering off the server, see “Power off the server” on page 61.

Power off the server

The server remains in a standby state when it is connected to a power source, allowing the Lenovo XClarity Controller to respond to remote power-on requests. To remove all power from the server (power status LED off), you must disconnect all power cables.

Power button location and power LED are specified in:

- Chapter 2 “Server components” on page 19
- “Troubleshooting by system LEDs and diagnostics display” on page 397

To place the server in a standby state (power status LED flashes once per second):

Note: The Lenovo XClarity Controller can place the server in a standby state as an automatic response to a critical system failure.

- Start an orderly shutdown using the operating system (if supported by your operating system).
- Press the power button to start an orderly shutdown (if supported by your operating system).
- Press and hold the power button for more than 4 seconds to force a shutdown.

When in a standby state, the server can respond to remote power-on requests sent to the Lenovo XClarity Controller. For information about powering on the server, see “Power on the server” on page 60.

Rail replacement

Follow the instructions in this section to remove and install the rails.

The rail kit for the server varies by the server model:

- Server models with 2.5-inch front drive bays: ThinkSystem SR860 V3/SR860 V4 Slide Rail
  - “Remove the rails from the rack (2.5-inch bay chassis)” on page 61
  - “Install the rail kit to the rack (2.5-inch bay chassis)” on page 62
- Server models with E3.S front bays: ThinkSystem SR860 V4 E3.S Chassis Slide Rail
  - “Remove the rails from the rack (E3.S bay chassis)” on page 64
  - “Install the rails from the rack (E3.S bay chassis)” on page 65

Remove the rails from the rack (2.5-inch bay chassis)

Procedure

Step 1. Remove the server from rails. See “Remove the server from the rack (2.5-inch bay chassis)” on page 68.

Step 2. Remove the rails from the rack.

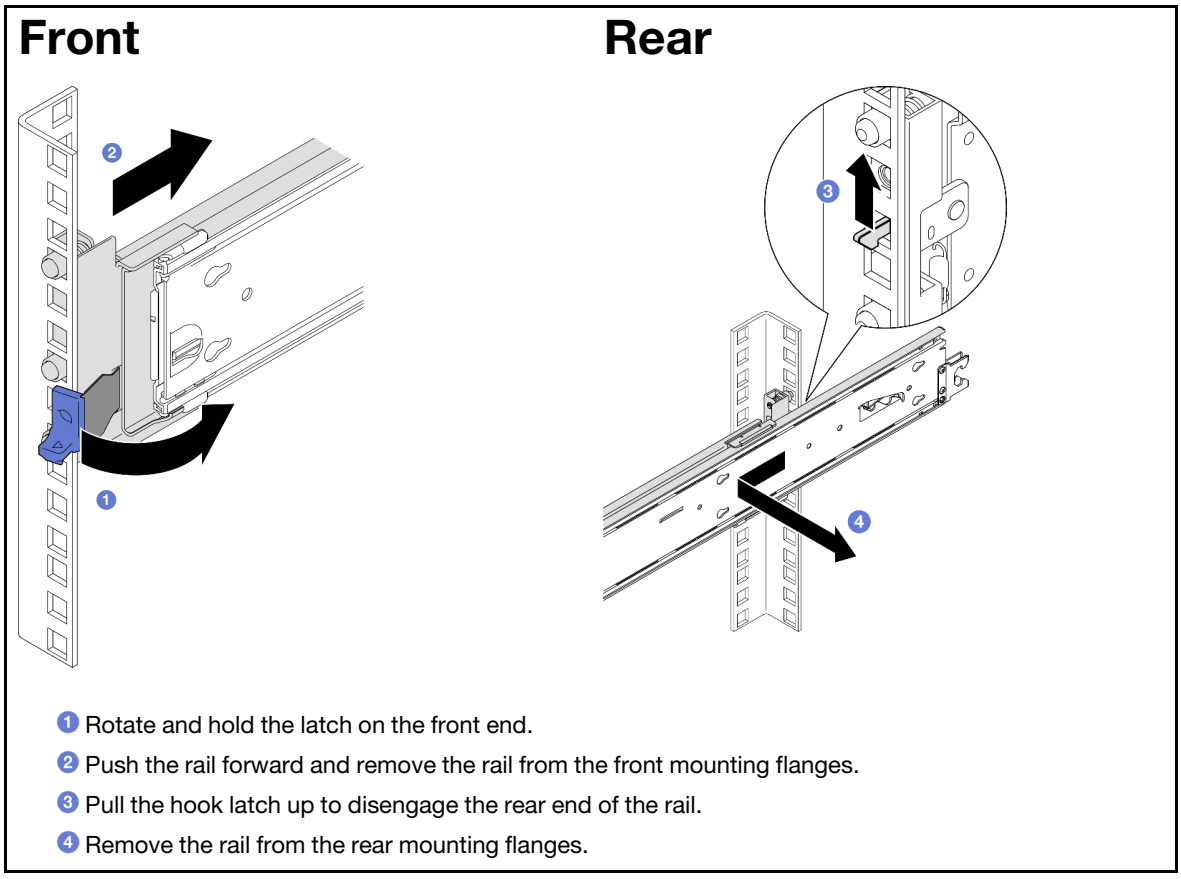

1 Rotate and hold the latch on the front end.
2 Push the rail forward and remove the rail from the front mounting flanges.
3 Pull the hook latch up to disengage the rear end of the rail.
4 Remove the rail from the rear mounting flanges.

Install the rail kit to the rack (2.5-inch bay chassis)

Notes:

- The rails are extensible as shown in the following illustration.

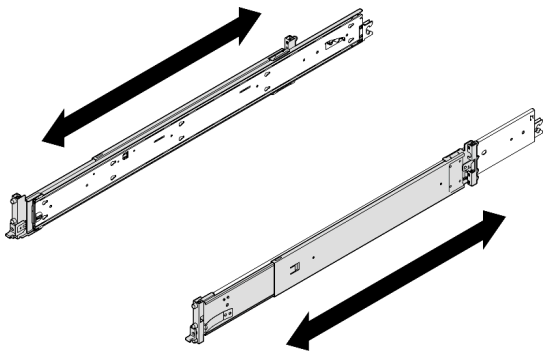

- Install the rail to the rack, starting from the rear and proceeding to the front.
- Make sure the rail is shortened to the shortest position.
- The rail mounting pins take up 2U space. Follow the U space marking on the rack when installing the rail kit.

Procedure

Step 1. Install the rear mounting pins to the rack.

Note: There are two rails, left rail (marked with L) and right rail (marked with R). Make sure that you install each rail to the corresponding side of the rack.

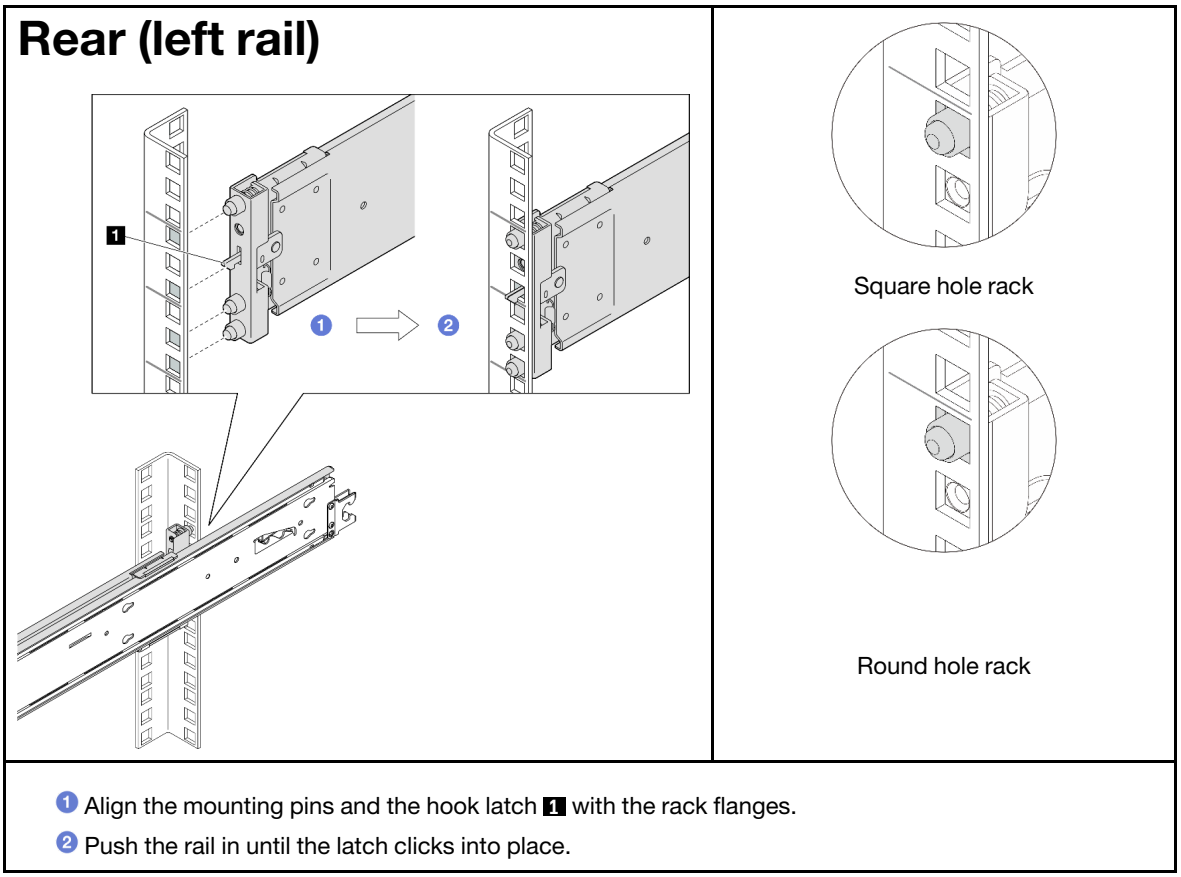

1 Align the mounting pins and the hook latch 1 with the rack flanges.

2 Push the rail in until the latch clicks into place.

Step 2. Install the front mounting pins to the rack.

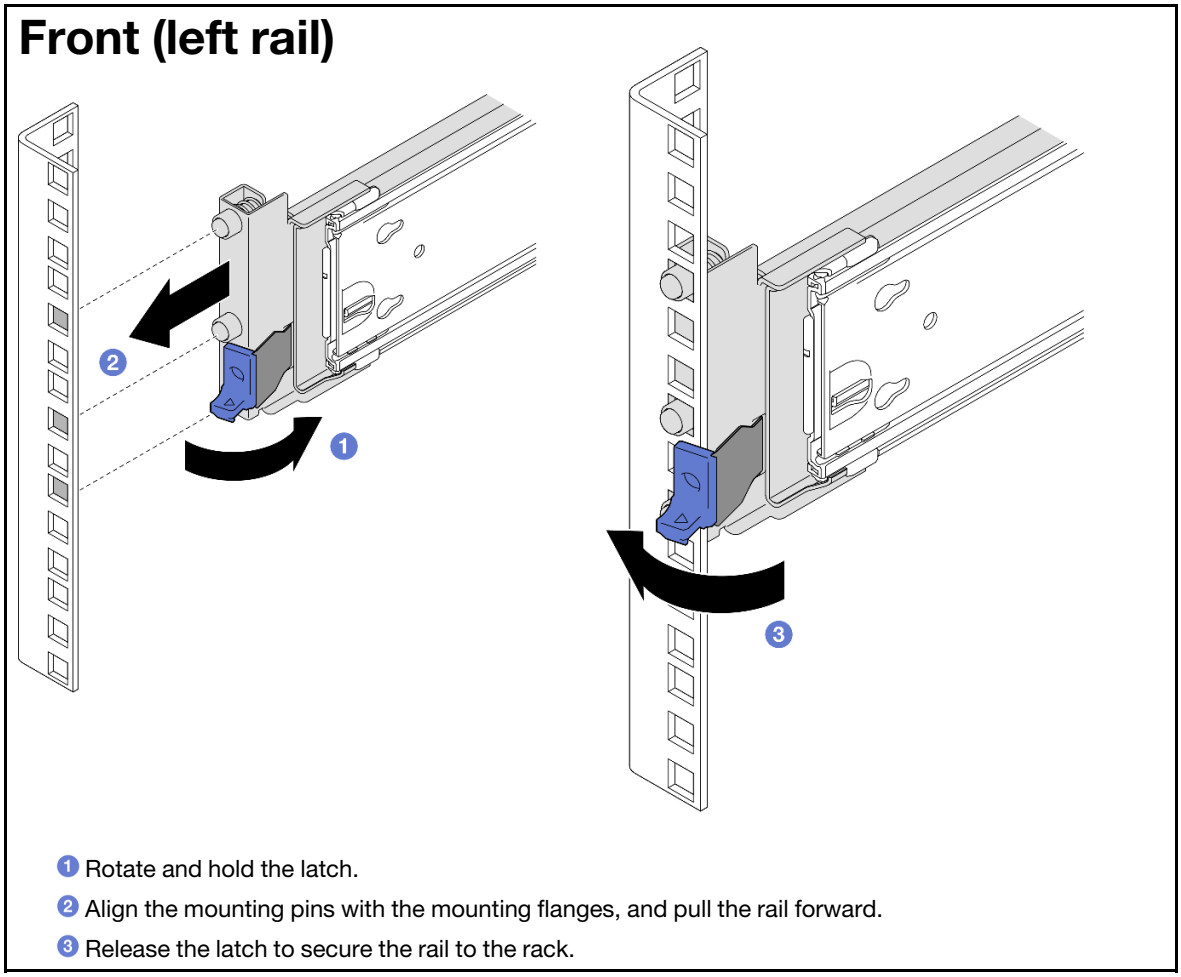

Step 3. Make sure that the rail is securely engaged in the flange holes by inspecting that the hook has caught and by sliding back and forward to ensure the rail does not pop out.

Important: Make sure both ends of the rail are seated at the same height.

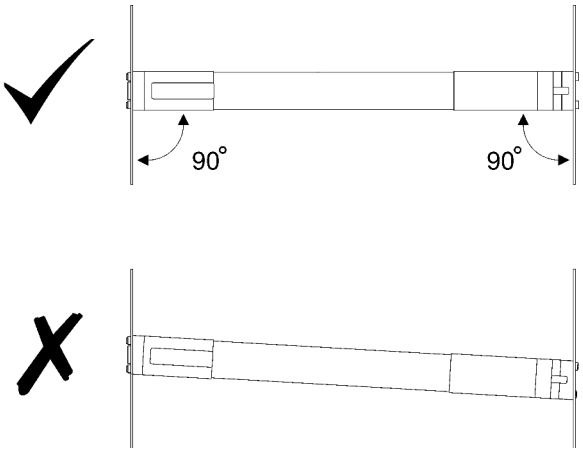

Step 4. Repeat the previous two steps on the other rail.

Remove the rails from the rack (E3.S bay chassis)

Procedure

Step 1. Remove the server from rails. See “Remove the server from the rack (E3.S bay chassis)” on page 82.

Step 2. Remove the rails from the rack.

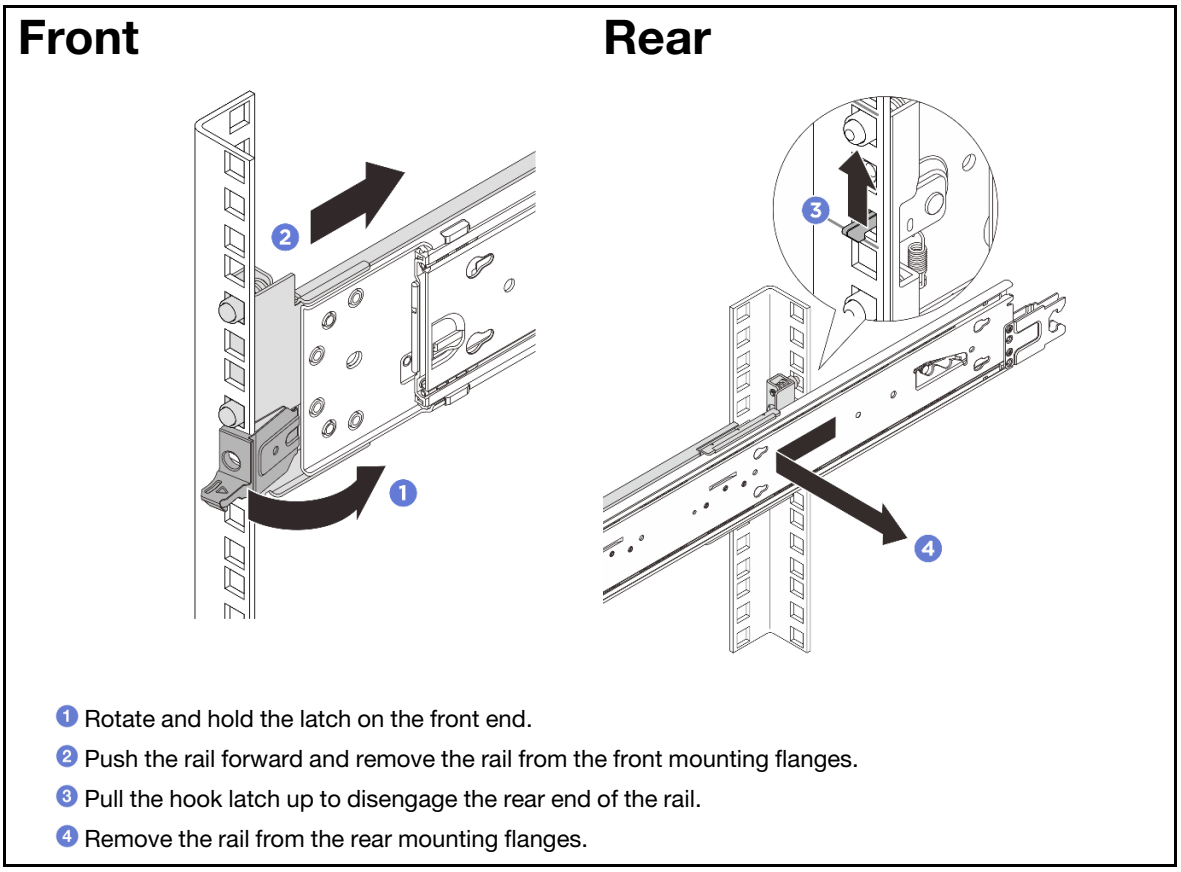

1 Rotate and hold the latch on the front end.
2 Push the rail forward and remove the rail from the front mounting flanges.
3 Pull the hook latch up to disengage the rear end of the rail.
4 Remove the rail from the rear mounting flanges.

Install the rails from the rack (E3.S bay chassis)

Notes:

- The rails are extensible as shown in the following illustration.

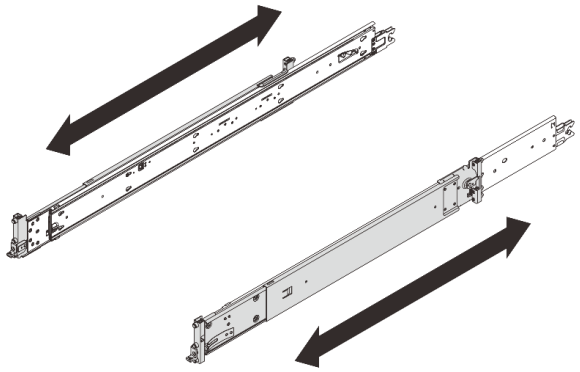

- Install the rail to the rack, starting from the rear and proceeding to the front.
- Make sure the rail is shortened to the shortest position.

- The rail mounting pins take up 2U space. Follow the U space marking on the rack when installing the rail kit.

Procedure

Step 1. Install the rear mounting pins to the rack.

Note: There are two rails, left rail (marked with L) and right rail (marked with R). Make sure that you install each rail to the corresponding side of the rack.

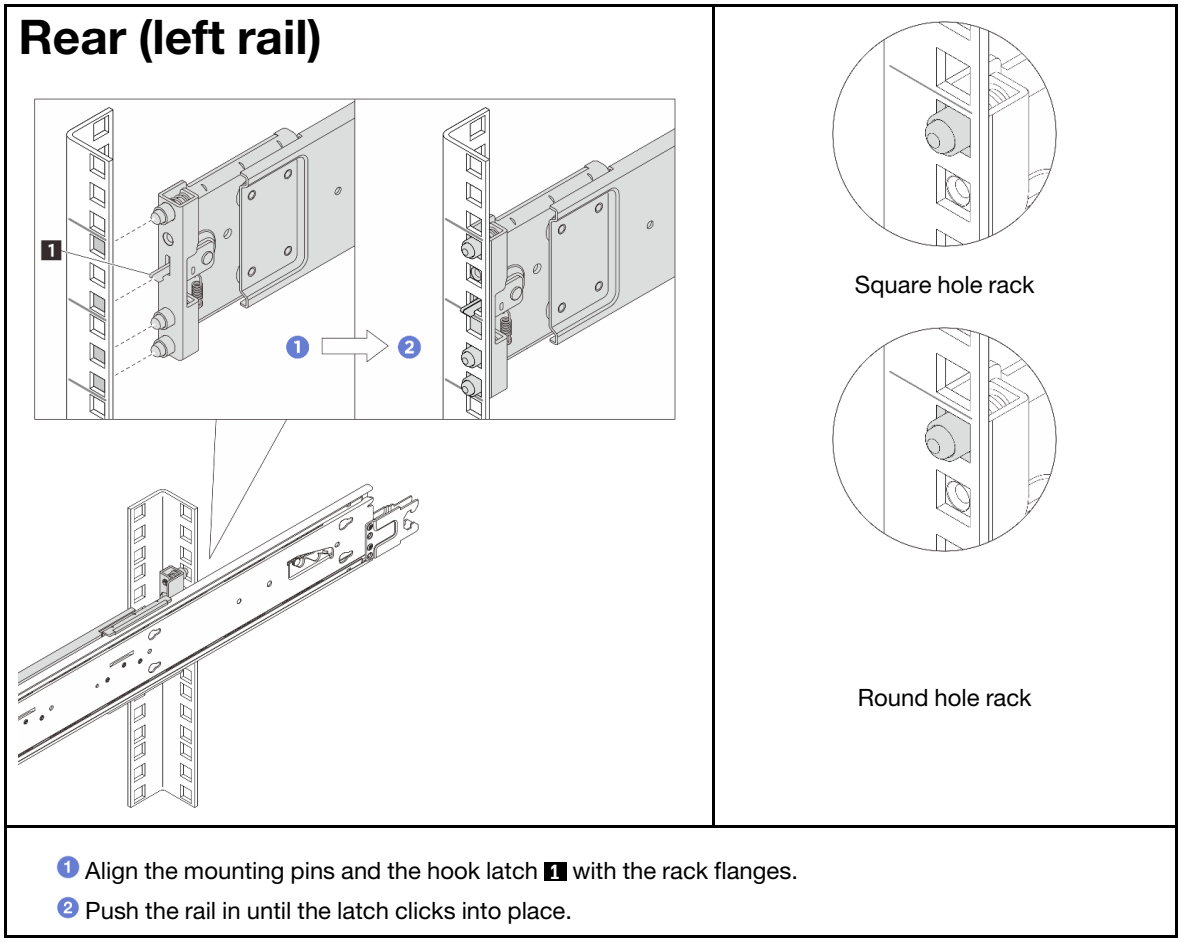

1 Align the mounting pins and the hook latch 1 with the rack flanges.

2 Push the rail in until the latch clicks into place.

Step 2. Install the front mounting pins to the rack.

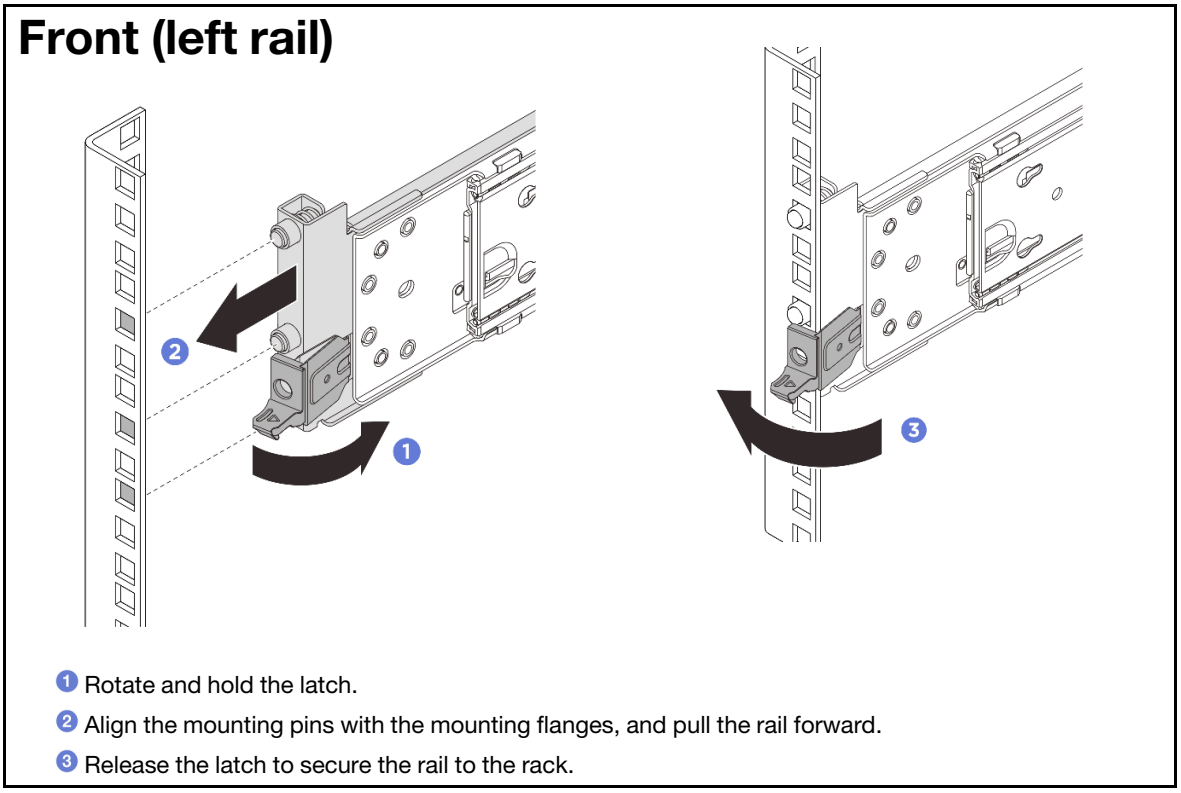

Step 3. Make sure that the rail is securely engaged in the flange holes by inspecting that the hook has caught and by sliding back and forward to ensure the rail does not pop out.

Important: Make sure both ends of the rail are seated at the same height.

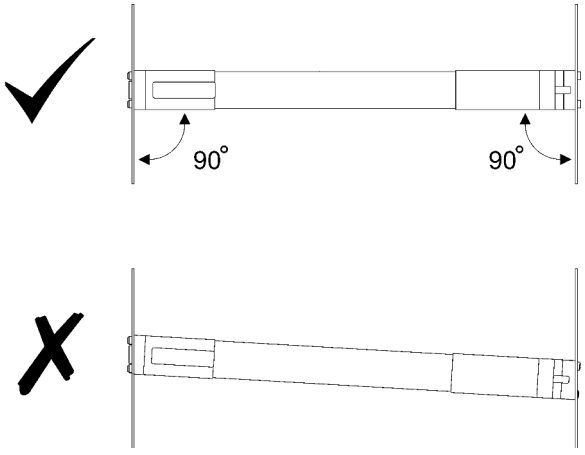

Step 4. Repeat the previous two steps on the other rail.

Server replacement

Follow instructions in this section to remove and install the server.

- Server models with 2.5-inch front drive bays:
  - “Remove the server from the rack (2.5-inch bay chassis)” on page 68
  - “Install the server to the rack (2.5-inch bay chassis)” on page 74

- Server models with E3.S front bays:
  - “Remove the server from the rack (E3.S bay chassis)” on page 82
  - “Install the server to the rack (E3.S bay chassis)” on page 89

Remove the server from the rack (2.5-inch bay chassis)

About this task

S036



18 - 32 kg (39 - 70 lb)



32 - 55 kg (70 - 121 lb)

CAUTION:
Use safe practices when lifting.

R006



CAUTION:
Do not place any object on top of a rack-mounted device unless that rack-mounted device is intended for use as a shelf.

S037



CAUTION:
The weight of this part or unit is more than 55 kg (121.2 lb). It takes specially trained persons, a lifting device, or both to safely lift this part or unit.

Attention:

- Read “Installation Guidelines” on page 45 and “Safety inspection checklist” on page 46 to ensure that you work safely.
- Power off the server and peripheral devices and disconnect the power cords and all external cables. See “Power off the server” on page 61.
- Prevent exposure to static electricity, which might lead to system halt and loss of data, by keeping static-sensitive components in their static-protective packages until installation, and handling these devices with an electrostatic-discharge wrist strap or other grounding system.

Procedure

Step 1. Disengage the sever if it has been secured to the rack.

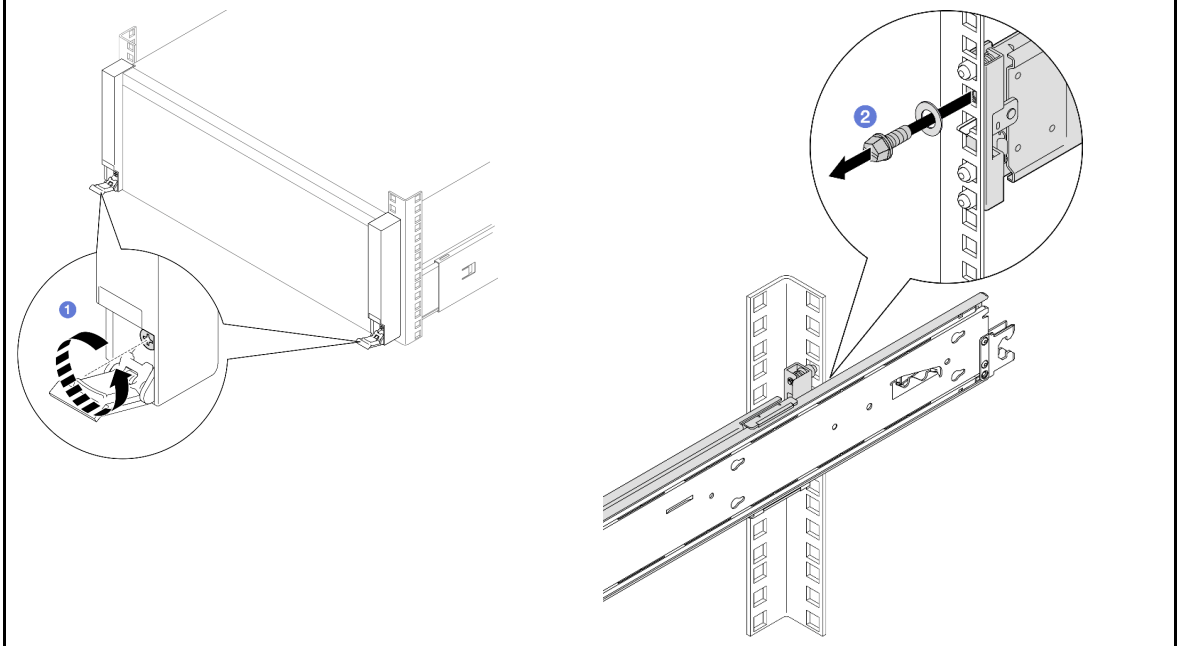

1 Open the rack release latches, and loosen the captive screws counterclockwise with a Phillips screwdriver.

Note: Use either flat-head, hex socket, or Phillips driver for the following instruction.

2 Remove the washer and the M5 screw on both sides.

Step 2. Determine the lifting method. Two lifting options are available:



For two-person lift, remove the following components beforehand:

- All the power supply units
- All the storage drives
- Both front and rear covers





Otherwise, lift the server with three people or a lifting device.

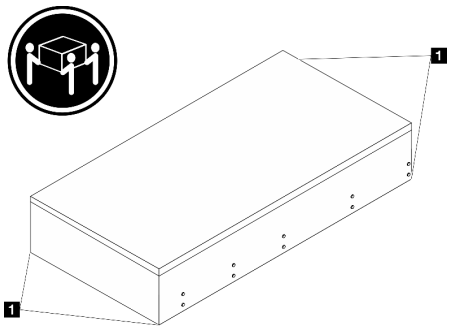

CAUTION:
Make sure to lift the server by holding the lift points 1.

Step 3. Remove the server along with the inner rails from rack.

a. Install the front lift handle.

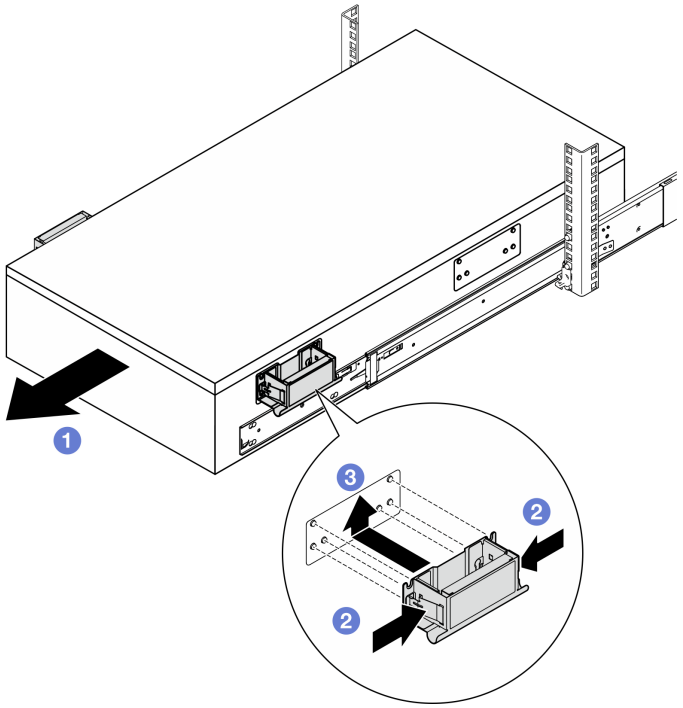

1 Slide the server out until it stops.

2 Pinch both flaps on the side of the handles.

3 Align the handles with the 6 posts on the sides of the server; then slide the handles up to secure them to the chassis.

CAUTION:
Make sure to install both front lift handles first before proceeding sliding out.

b. Lift the first lock latches up to proceed sliding out.

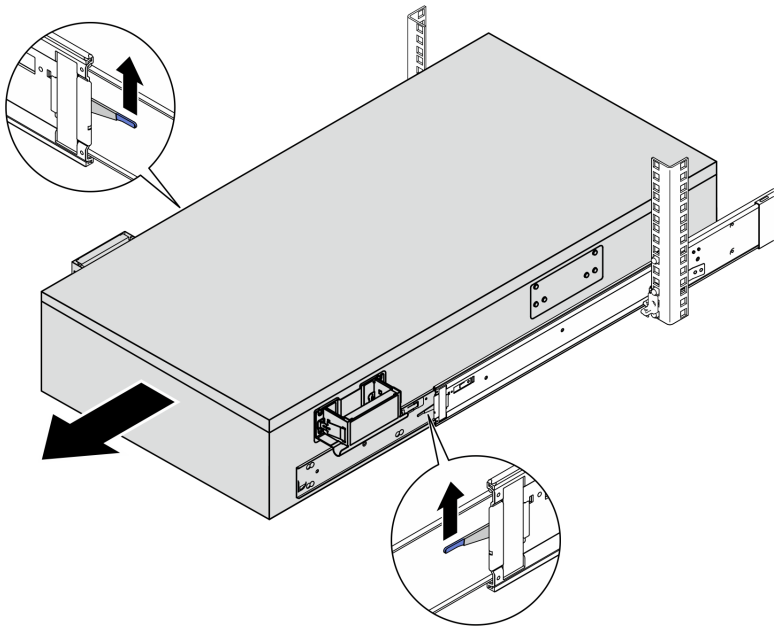

c. Attach the rear handles.

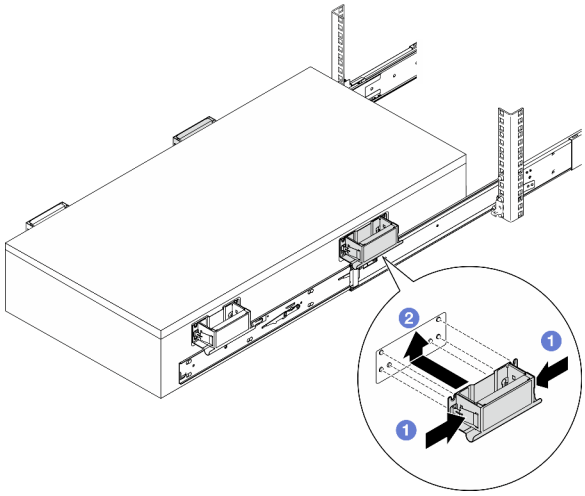

1 Pinch both flaps on the side of the handles.

2 Align the handles with the 6 posts on the sides of the server; then slide the handles up to secure them to the chassis.

CAUTION:
Make sure to install both rear lift handles first before proceeding sliding out.

d. Lift the second lock latches up and remove the server completely from the rack; then place it on a table.

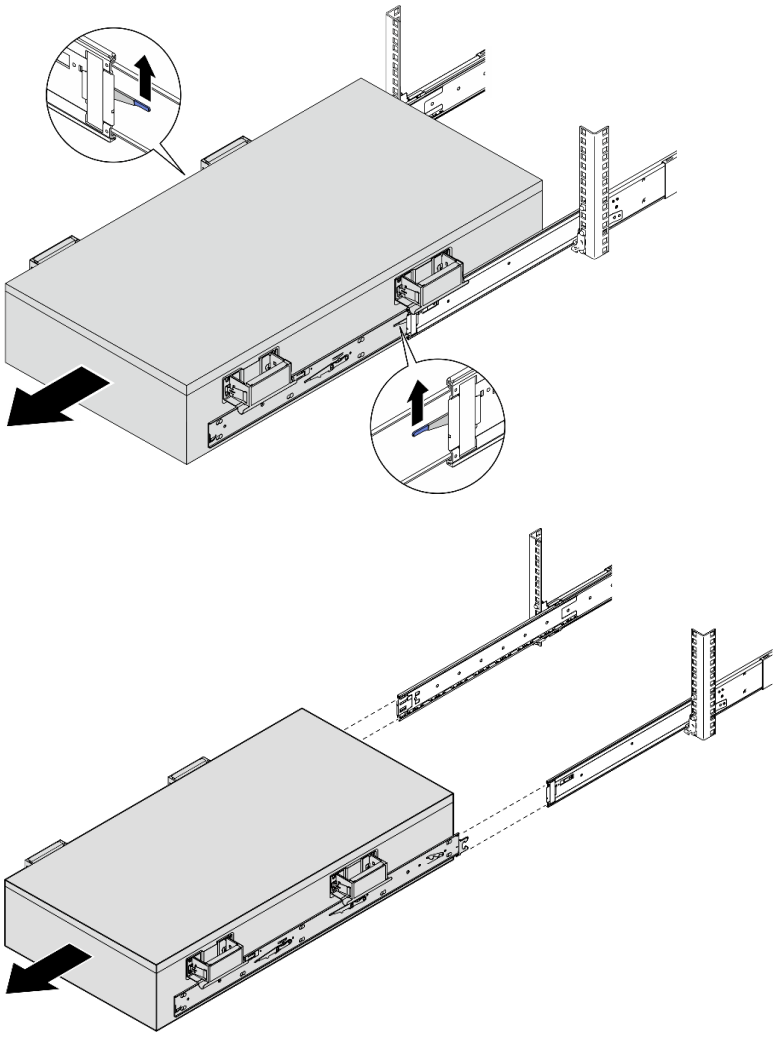

Step 4. Remove the lift handles.

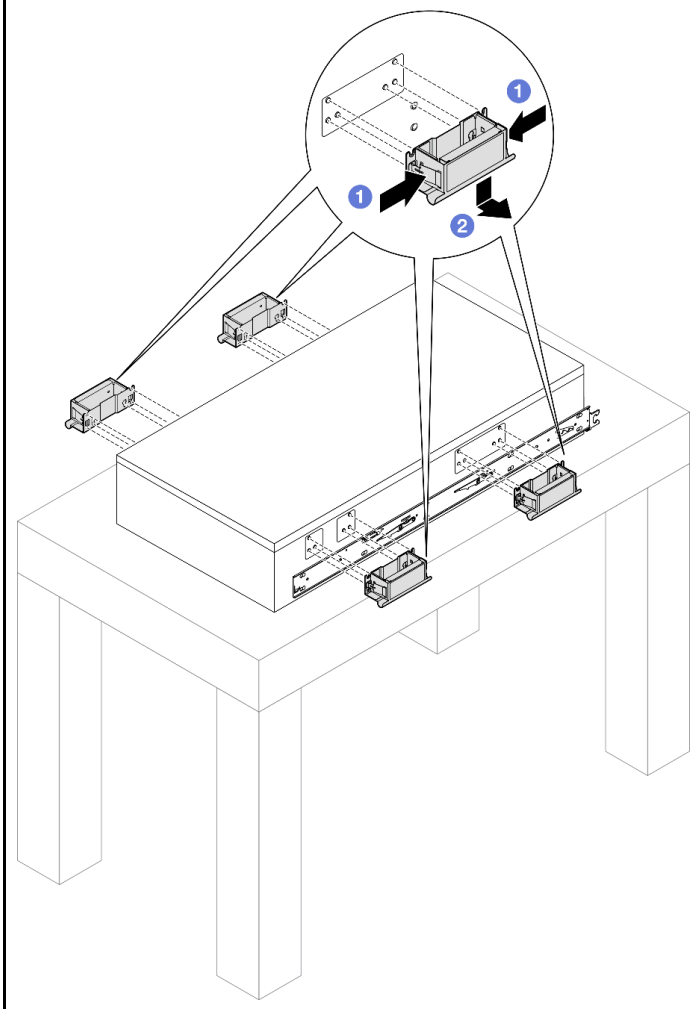

1 Pinch both flaps on the side of the handles.

2 Slide the handles down to remove them from the server.

Note: Make sure to remove all 4 lift handles.

Step 5. Loosen and remove an M4 screw in the corresponding hole on both inner rails as shown.

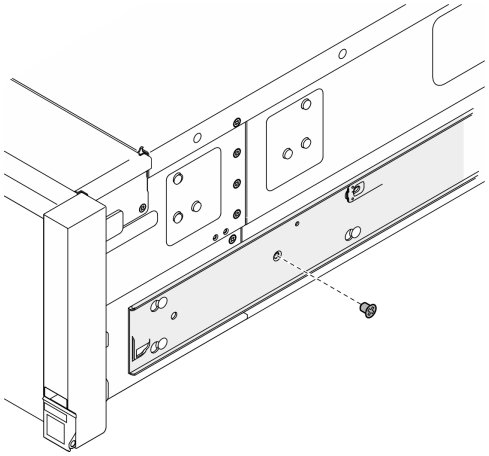

Step 6. Remove the inner rail from the server.

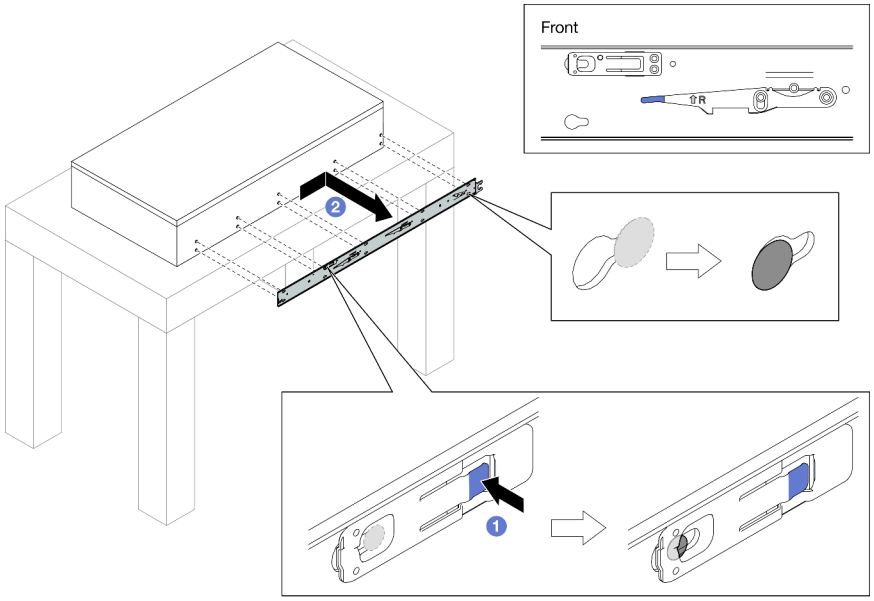

1 Press the release tab.

2 Push the inner rail backwards until the T-pins on the server disengaged from the inner rail.

Step 7. Repeat the previous two steps on the other rail.

Install the server to the rack (2.5-inch bay chassis)

About this task

S036



18 - 32 kg (39 - 70 lb)



32 - 55 kg (70 - 121 lb)

CAUTION:
Use safe practices when lifting.

R006



CAUTION:
Do not place any object on top of a rack-mounted device unless that rack-mounted device is intended for use as a shelf.

S037



CAUTION:
The weight of this part or unit is more than 55 kg (121.2 lb). It takes specially trained persons, a lifting device, or both to safely lift this part or unit.

Attention:

- Read “Installation Guidelines” on page 45 and “Safety inspection checklist” on page 46 to ensure that you work safely.
- Power off the server and peripheral devices and disconnect the power cords and all external cables. See “Power off the server” on page 61.
- Prevent exposure to static electricity, which might lead to system halt and loss of data, by keeping static-sensitive components in their static-protective packages until installation, and handling these devices with an electrostatic-discharge wrist strap or other grounding system.

Procedure

Step 1. Lift the server and place it on a table. Two lifting options are available:

<table>
<tr>
<td>

For two-person lift, remove the following components beforehand:

All the power supply units
All the storage drives
Both front and rear covers

</td>
<td>



Otherwise, lift the server with three people or a lifting device.</td>
</tr>
<tr>
<td colspan="2">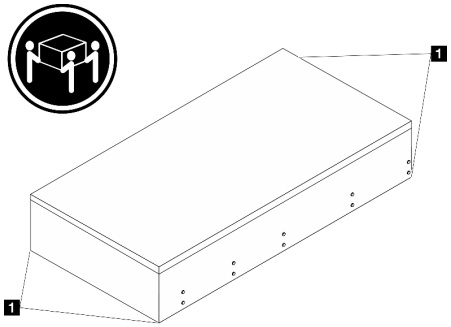

CAUTION:
Make sure to lift the server by holding the lift points 1.</td>
</tr>
</table>

Step 2. Remove the inner rails from the intermediate rails.

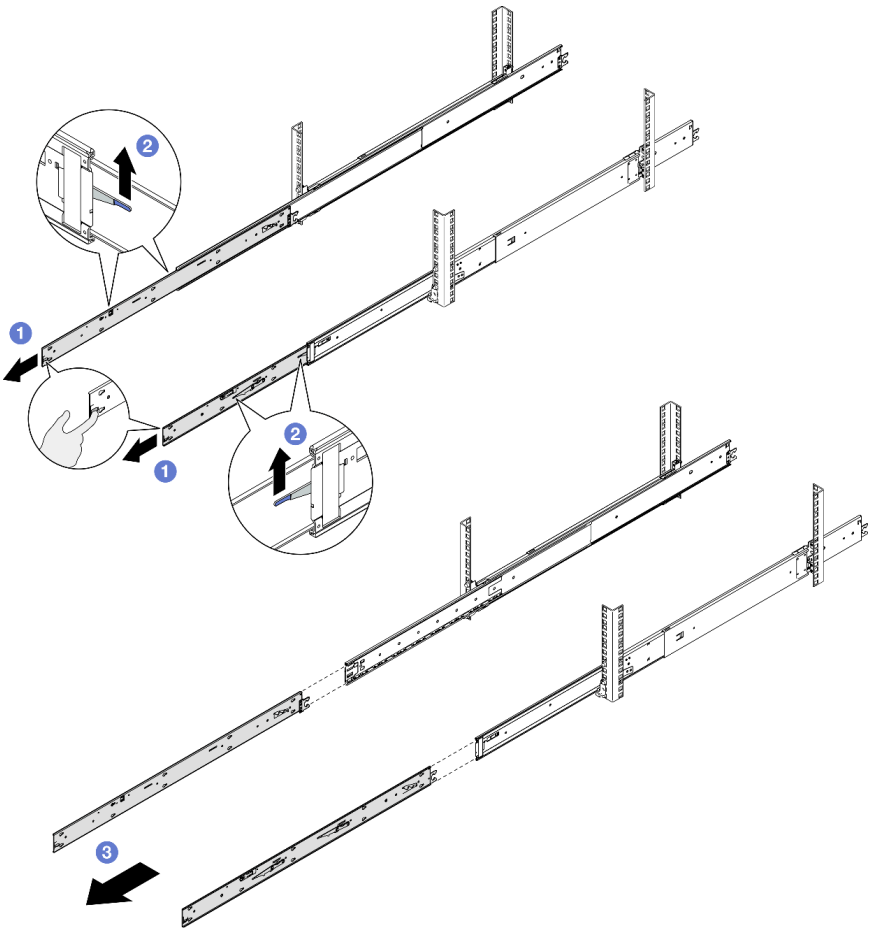

1 Pull the inner rails all the way out until they stop.

2 Lift the lock latches, and pull the inner rails to disengage them from the intermediate rails.

Attention: There are two pairs of lock latches on the rails. Lift the second pair of latches to proceed to slide the inner rails out.

3 Remove the inner rails.

Step 3. Align the slots on the inner rail with the corresponding T-pins on the side of the server; then, slide the inner rail forwards until the T-pins lock into place with the inner rail.

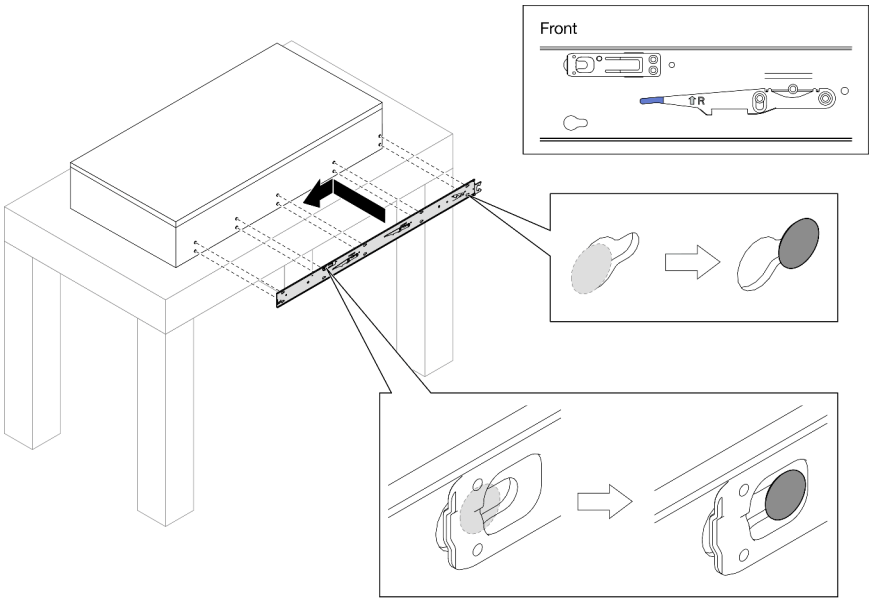

Step 4. Insert and tighten an M4 screw to secure the inner rail as shown.

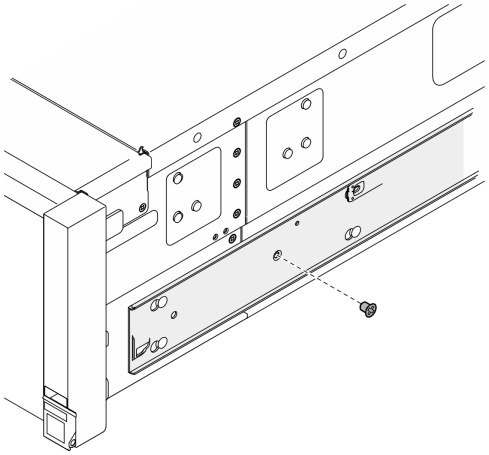

Step 5. Repeat the previous two steps on the other rail.

Step 6. Attach the lift handle.

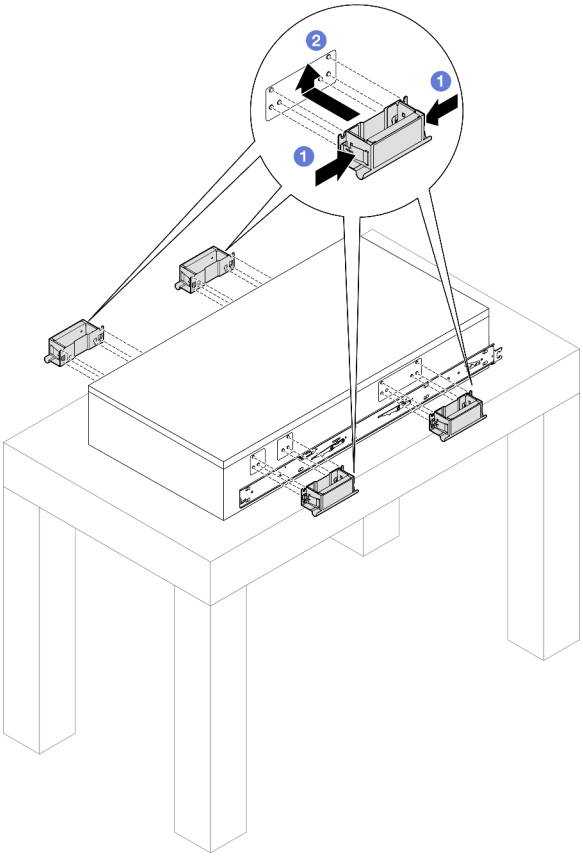

1 Pinch both flaps on the side of the handles.

2 Align the handles with the 6 posts on the sides of the server; then slide the handles up to secure them to the chassis.

Notes:

- Make sure all 6 posts are secured.
- There are 4 lift handles in total. Make sure to install them all properly before lifting the server.

Step 7. Install the server to the rack.

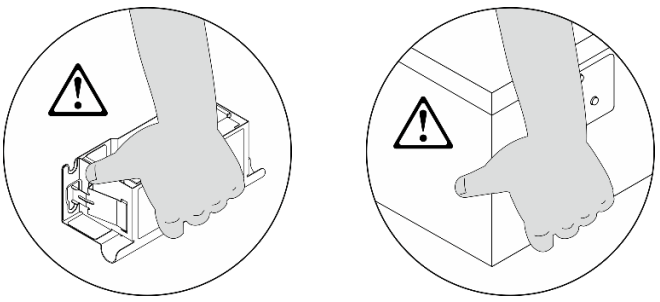

Attention: When moving the server, hold the server by its lift points or the lift handles at all time.

a. Align both rear ends of the inner rails with the openings in the intermediate rails, and make sure the two pairs of rails mate correctly. Then, carefully slide the server into the rack.

Attention: Before inserting the inner rails into the intermediate rails, make sure that the ball retainers on both sides of the intermediate rails reach the outmost position.

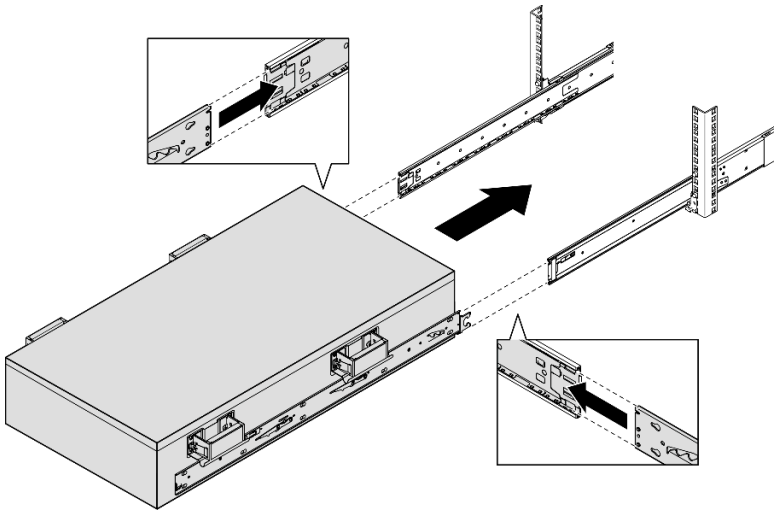

b. Remove the rear lift handles.

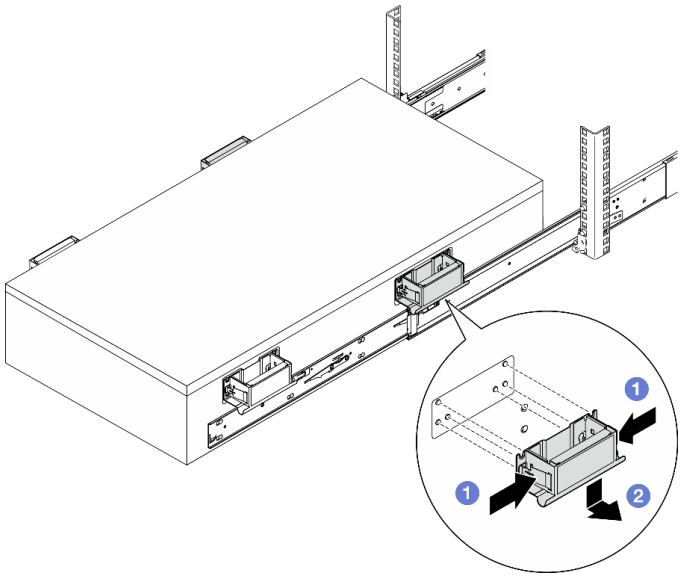

1 Pinch both flaps on the side of the handles.

2 Slide the handles down to remove them.

Note: Make sure to remove both rear lift handles before proceeding sliding in.

c. Lift the first pair of lock latches to proceed to slide the server in until the rails snap into place.

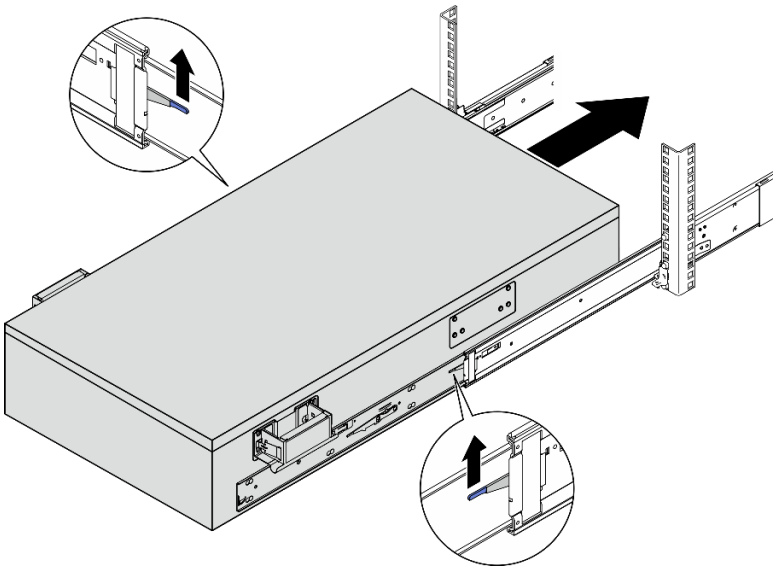

d. Remove the front lift handles.

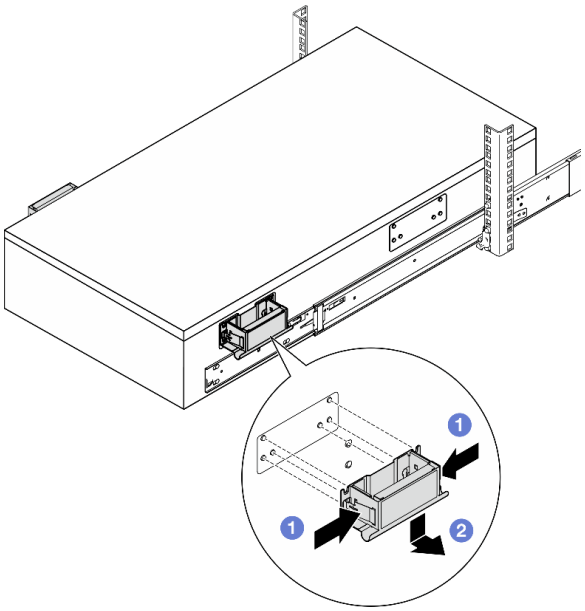

1 Pinch both flaps on the side of the handles.

2 Slide the handles down to remove them from the server.

Note: Make sure to remove both front lift handles before proceeding to slide the server in.

CAUTION:
Do not lift the second lock latches until all handles are properly removed.

e. Lift the second pair of lock latches to proceed to slide the server in.

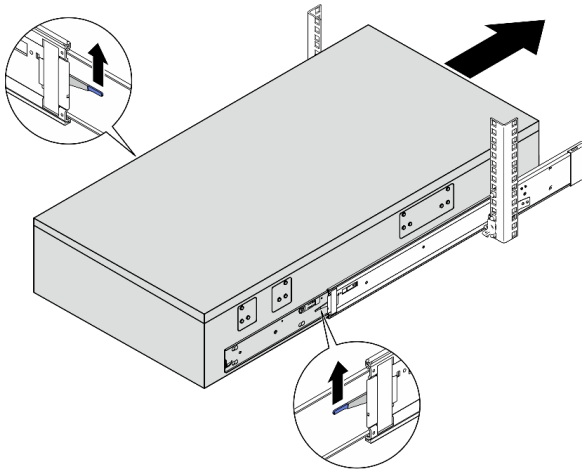

Attention: Slide the server all the way out and all the way back in to make sure the rails are working smoothly.

Step 8. Reinstall all the components that were removed previously.

Step 9. (Optional) Secure the server to the rack.

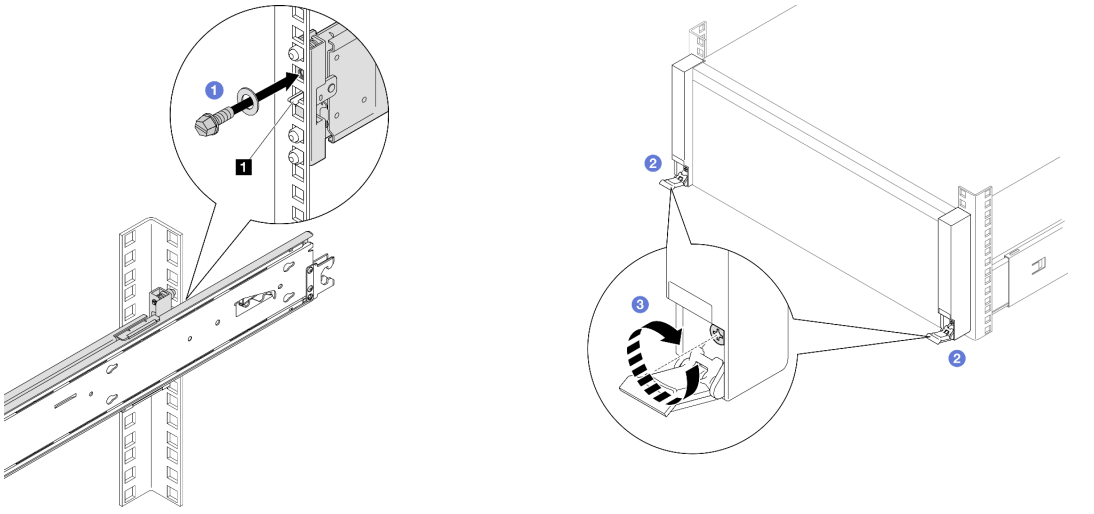

Note: Use either flat-head, hex socket, or Phillips driver for the following instruction.

1. Insert and tighten an M5 screw along with a washer to the hole below each hook latch **1**.
2. Open the rack release latches.
3. Tighten the captive screws clockwise with a Phillips screwdriver.

After you finish

Complete the parts replacement. See "Complete the parts replacement" on page 382.

Remove the server from the rack (E3.S bay chassis)

About this task

S037



CAUTION:
The weight of this part or unit is more than 55 kg (121.2 lb). It takes specially trained persons, a lifting device, or both to safely lift this part or unit.



CAUTION:
Use safe practices when lifting.



CAUTION:
Drop hazard.



CAUTION:
Do not place any object on top of a rack-mounted device unless that rack-mounted device is intended for use as a shelf.

Attention:

- Read “Installation Guidelines” on page 45 and “Safety inspection checklist” on page 46 to ensure that you work safely.
- Power off the server and peripheral devices and disconnect the power cords and all external cables. See “Power off the server” on page 61.
- Prevent exposure to static electricity, which might lead to system halt and loss of data, by keeping static-sensitive components in their static-protective packages until installation, and handling these devices with an electrostatic-discharge wrist strap or other grounding system.

Procedure

Step 1. Disengage the sever if it has been secured to the rack.

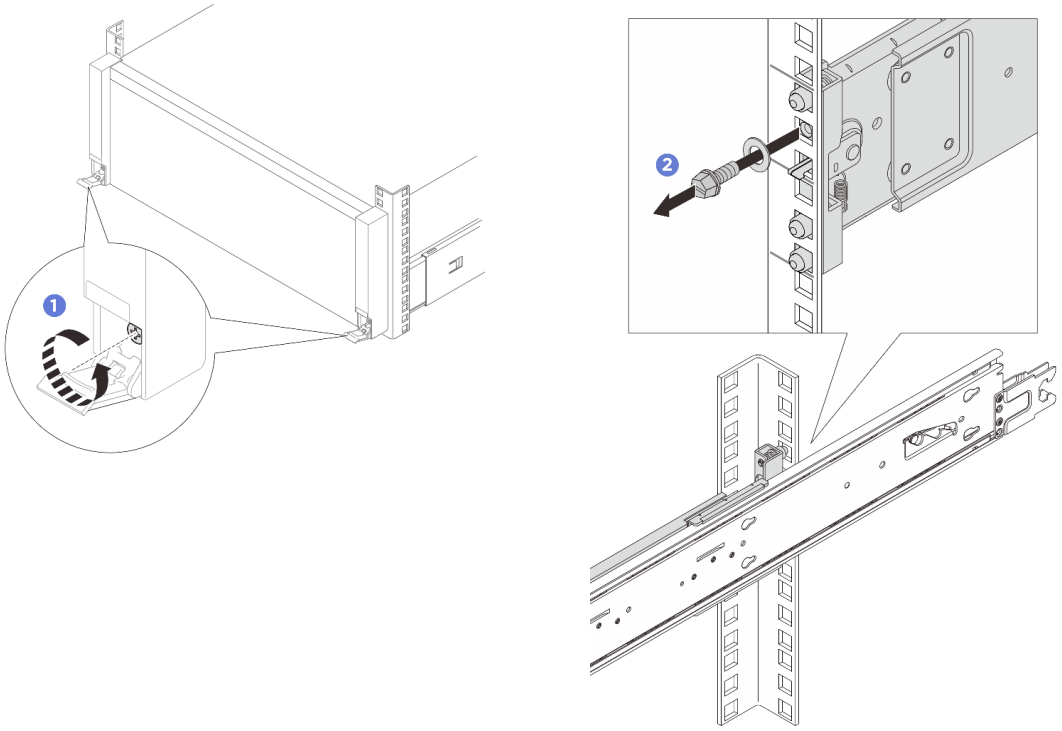

1 Open the rack release latches, and loosen the captive screws counterclockwise with a Phillips screwdriver.

Note: Use either flat-head, hex socket, or Phillips driver for the following instruction.

2 Remove the washer and the M5 screw on both sides.

Step 2. Determine the lifting method.

Using a lift device: (recommended)



CAUTION:
The weight of this part or unit is more than 55 kg (121.2 lb). It takes specially trained persons, a lifting device, or both to safely lift this part or unit.

Manual lift: (not recommended)

Attention: Before lifting the server, remove all power supply units and all storage drives.



CAUTION:
Use safe practices when lifting.



CAUTION:
Drop hazard.

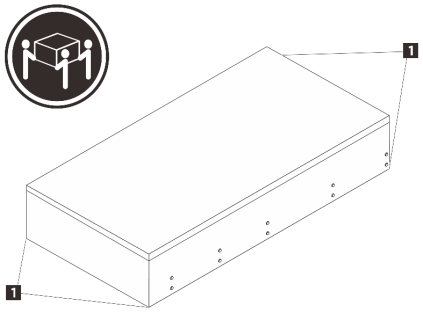

CAUTION:
Make sure three people are lifting the server by holding the lift points 1.

Step 3. Remove the server along with the inner rails from rack.

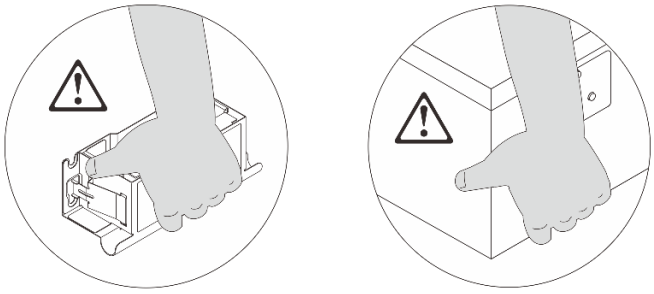

Attention: When moving the serve manually, hold the server by its lift points or the lift handles at all time.

a. Install the front lift handle if you need to lift the server manually.

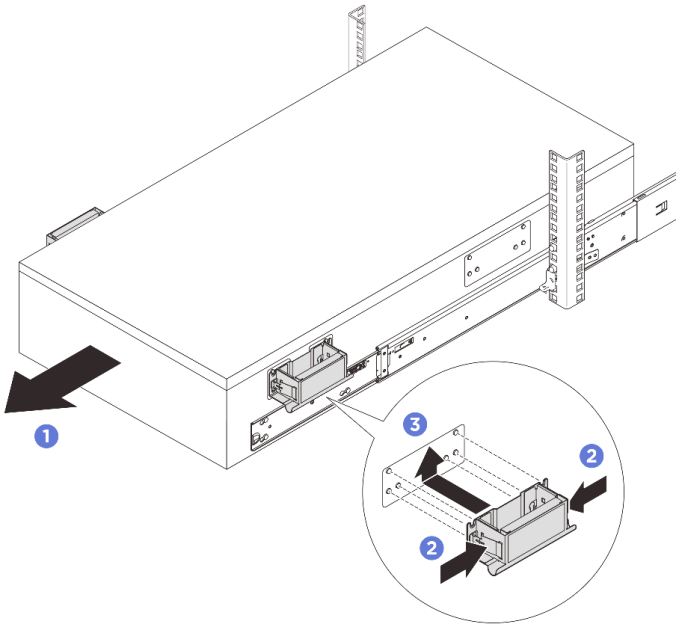

1 Slide the server out until it stops.

2 Pinch both flaps on the side of the handles.

3 Align the handles with the 6 posts on the sides of the server; then slide the handles up to secure them to the chassis.

CAUTION:
Make sure to install both front lift handles first before proceeding sliding out.

b. Lift the first lock latches up to proceed sliding out.

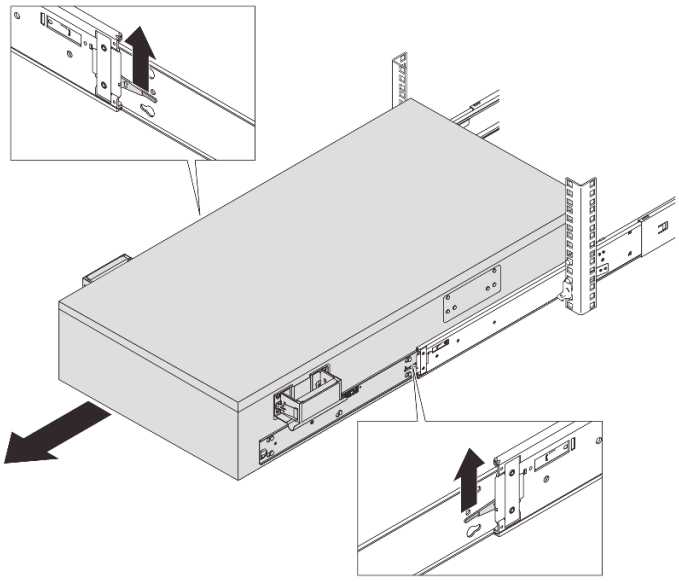

c. Attach the rear handles if you need to lift the server manually.

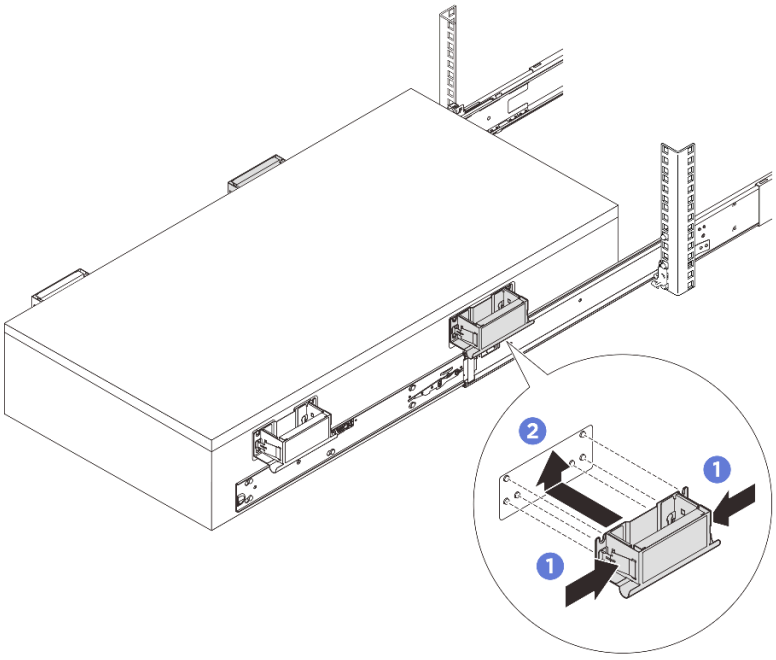

1 Pinch both flaps on the side of the handles.

2 Align the handles with the 6 posts on the sides of the server; then slide the handles up to secure them to the chassis.

CAUTION:
Make sure to install both rear lift handles first before proceeding sliding out.

d. Lift the second lock latches up and remove the server completely from the rack; then place it on a flat and stable surface.

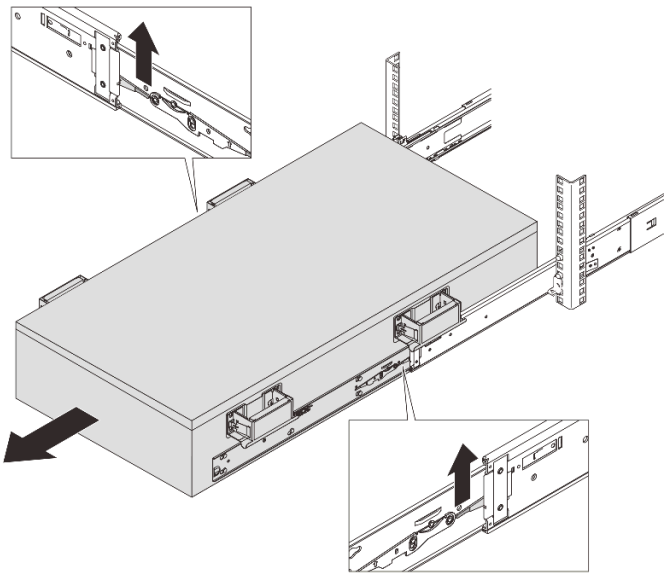

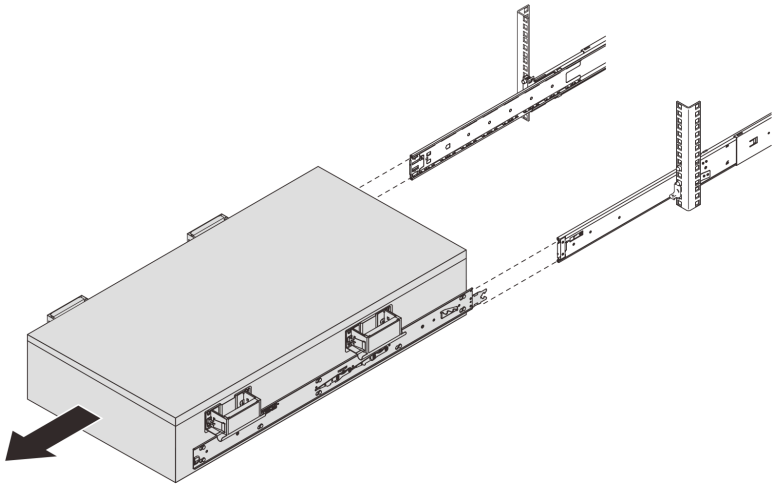

Step 4. Remove the lift handles if installed.

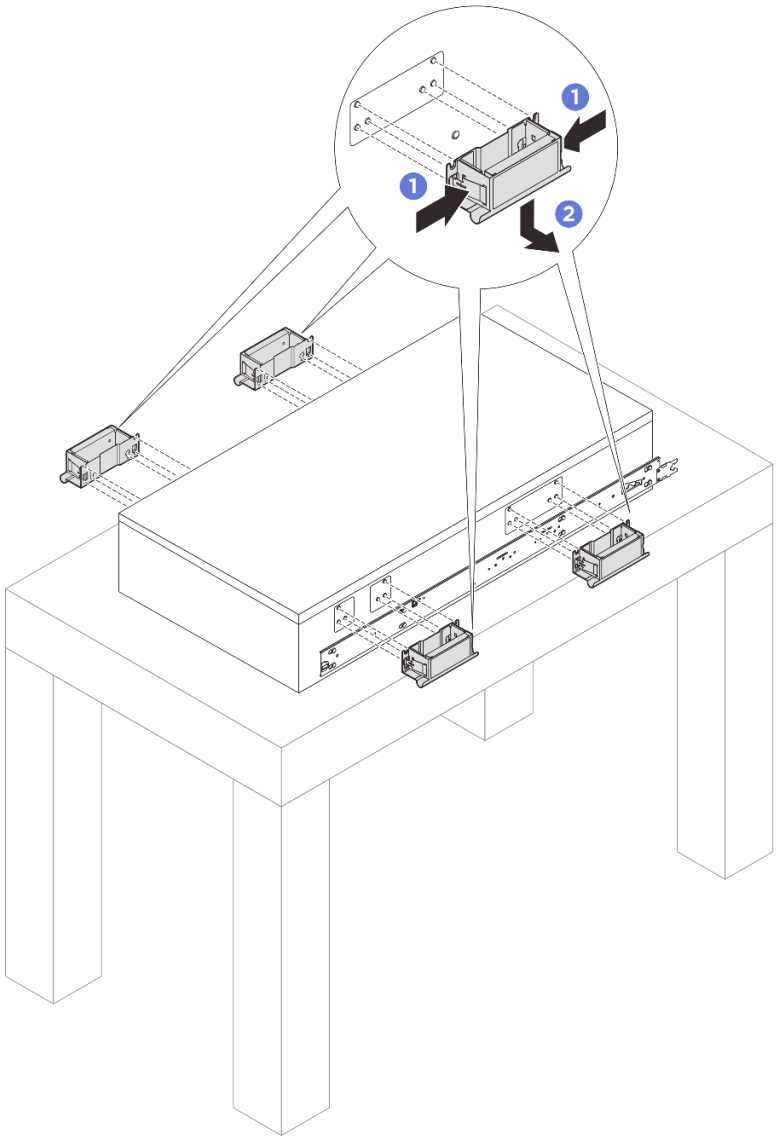

1 Pinch both flaps on the side of the handles.

2 Slide the handles down to remove them from the server.

Note: Make sure to remove all 4 lift handles.

Step 5. Loosen and remove an M4 screw in the corresponding hole on both inner rails as shown.

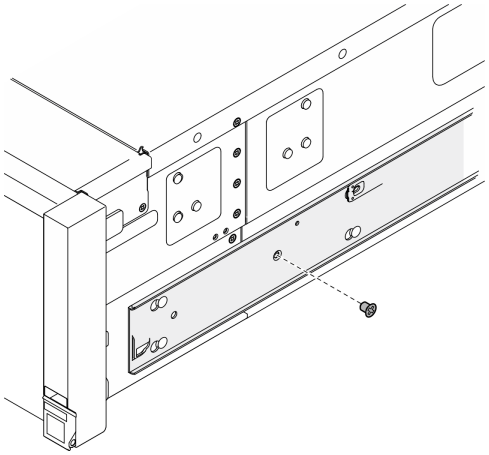

Step 6. Remove the inner rail from the server.

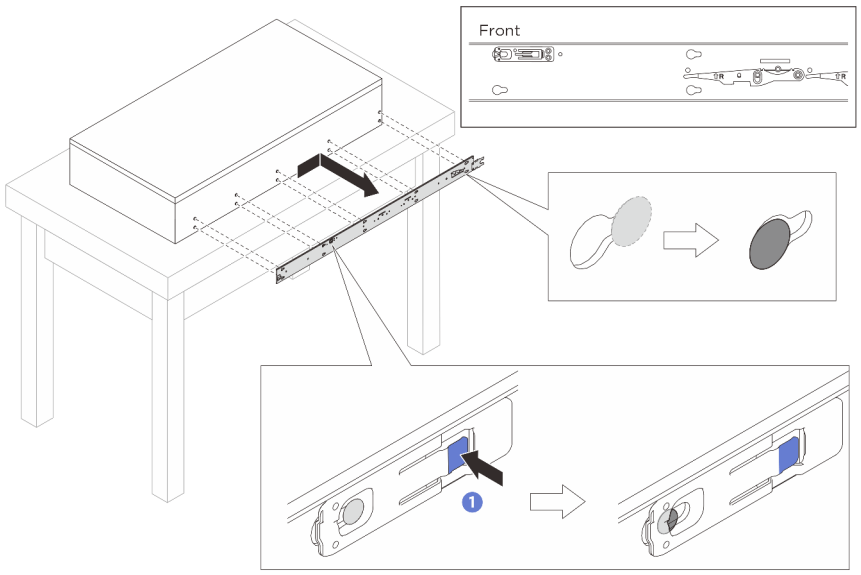

1 Press the release tab.

2 Push the inner rail backwards until the T-pins on the server disengaged from the inner rail.

Step 7. Repeat the previous step on the other rail.

Install the server to the rack (E3.S bay chassis)

About this task

S037



CAUTION:
The weight of this part or unit is more than 55 kg (121.2 lb). It takes specially trained persons, a lifting device, or both to safely lift this part or unit.



CAUTION:
Use safe practices when lifting.



CAUTION:
Drop hazard.



CAUTION:
Do not place any object on top of a rack-mounted device unless that rack-mounted device is intended for use as a shelf.

Attention:

- Read “Installation Guidelines” on page 45 and “Safety inspection checklist” on page 46 to ensure that you work safely.
- Power off the server and peripheral devices and disconnect the power cords and all external cables. See “Power off the server” on page 61.
- Prevent exposure to static electricity, which might lead to system halt and loss of data, by keeping static-sensitive components in their static-protective packages until installation, and handling these devices with an electrostatic-discharge wrist strap or other grounding system.

Procedure

Step 1. Lift the server and place it on a flat and stable surface.

Using a lift device: (recommended)



CAUTION:
The weight of this part or unit is more than 55 kg (121.2 lb). It takes specially trained persons, a lifting device, or both to safely lift this part or unit.

Manual lift: (not recommended)

Attention: Before lifting the server, remove all power supply units and all storage drives.



CAUTION:
Use safe practices when lifting.



CAUTION:
Drop hazard.

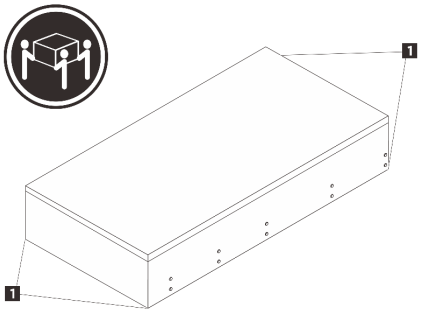

CAUTION:
Make sure three people are lifting the server by holding the lift points 1.

Step 2. Remove the inner rails from the intermediate rails.

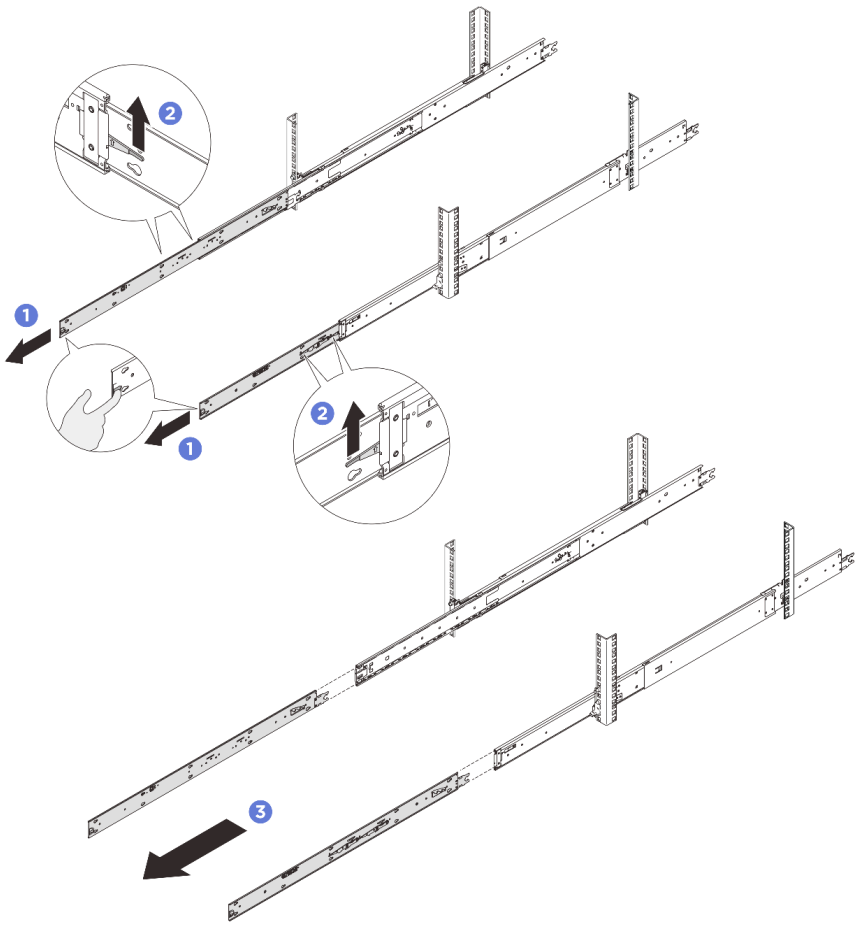

1 Pull the inner rails all the way out until they stop.

2 Lift the lock latches and pull the inner rails to disengage them from the intermediate rails.

Note: There are two pairs of lock latches on the rails. Lift both pairs of latches to proceed to slide the inner rails out.

3 Remove the inner rails.

Step 3. Align the slots on the inner rail with the corresponding T-pins on the side of the server; then, slide the inner rail forwards until the T-pins lock into place with the inner rail. Make sure all T-pins are engaged with the inner rail.

Attention:

- There are two inner rails, left rail (marked with L) and right rail (marked with R). Ensure that each rail is installed to the corresponding side of the server.
- Make sure that the stamp “Front” always faces toward the front when assembling the inner rails to the server.

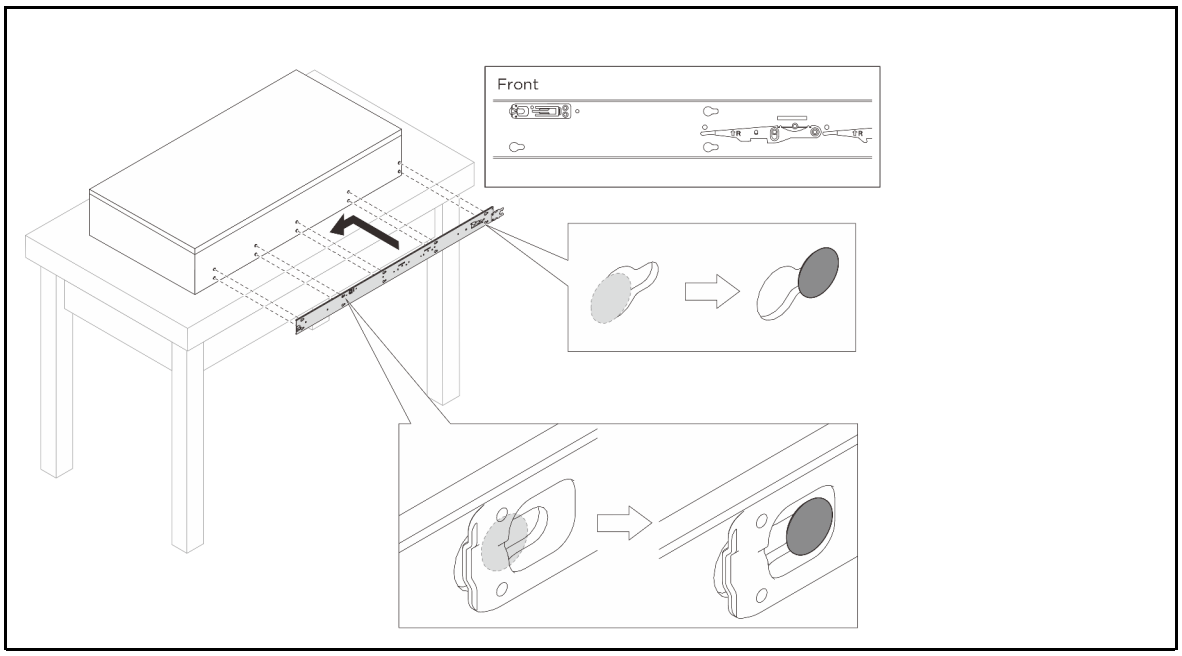

Step 4. Insert and tighten an M4 screw to secure the inner rail as shown.

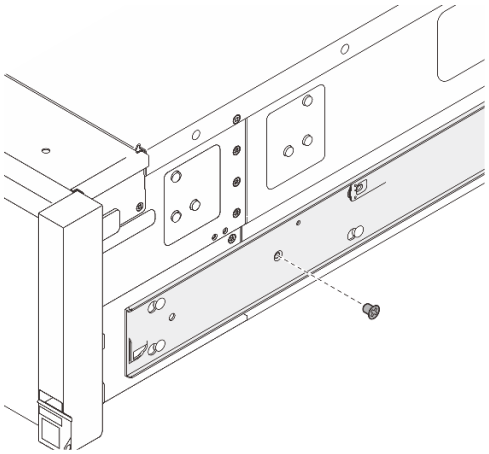

Step 5. Repeat the previous two steps on the other rail.

Step 6. Attach the lift handles if you need to lift the server manually.

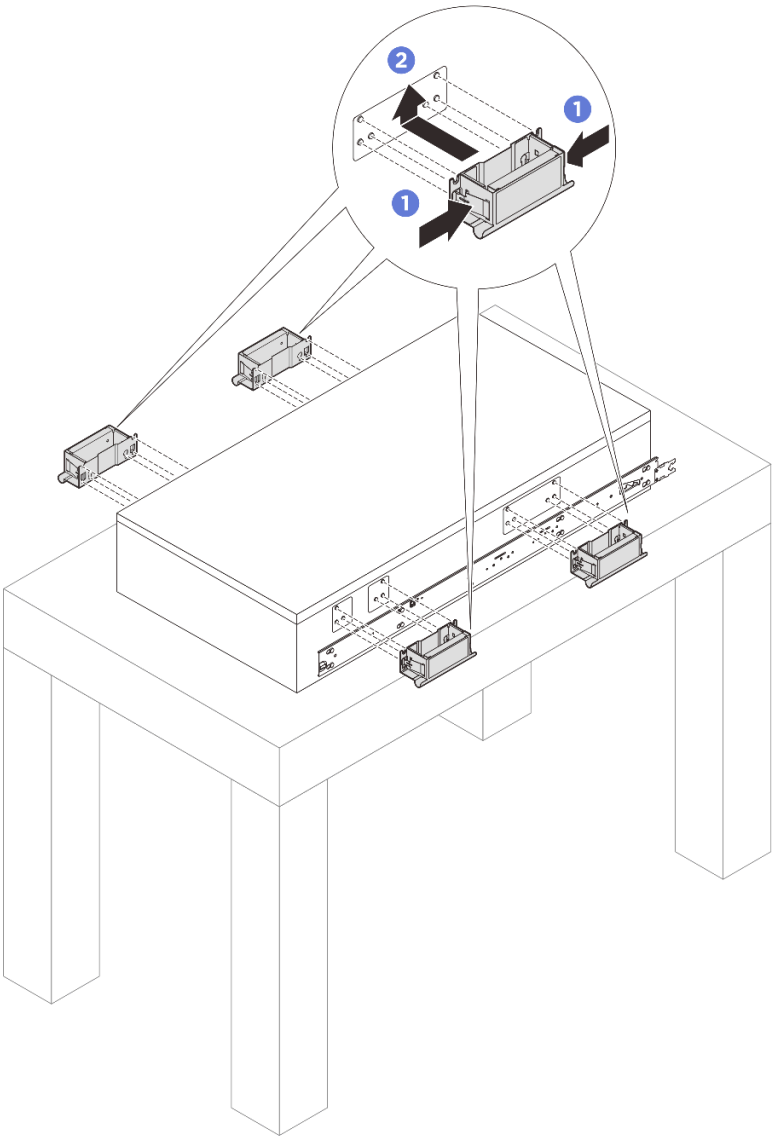

1 Pinch both flaps on the side of the handles.

2 Align the handles with the 6 posts on the sides of the server; then slide the handles up to secure them to the chassis.

Notes:

- Make sure all 6 posts are secured.
- There are 4 lift handles in total. Make sure to install them all properly before lifting the server.

Step 7. Install the server to the rack.

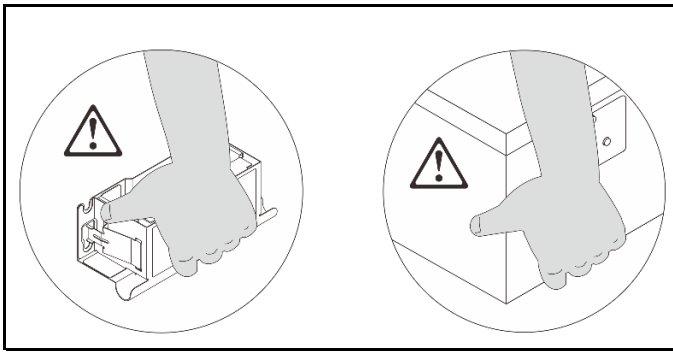

Attention: When moving the serve manually, hold the server by its lift points or the lift handles all the time.

a. Align both rear ends of the inner rails with the openings in the intermediate rails, and make sure the two pairs of rails mate correctly. Then, carefully slide the server into the rack until the rails stop.

Attention: Before inserting the inner rails into the intermediate rails, make sure that the ball retainers on both sides of the intermediate rails reach the outmost position.

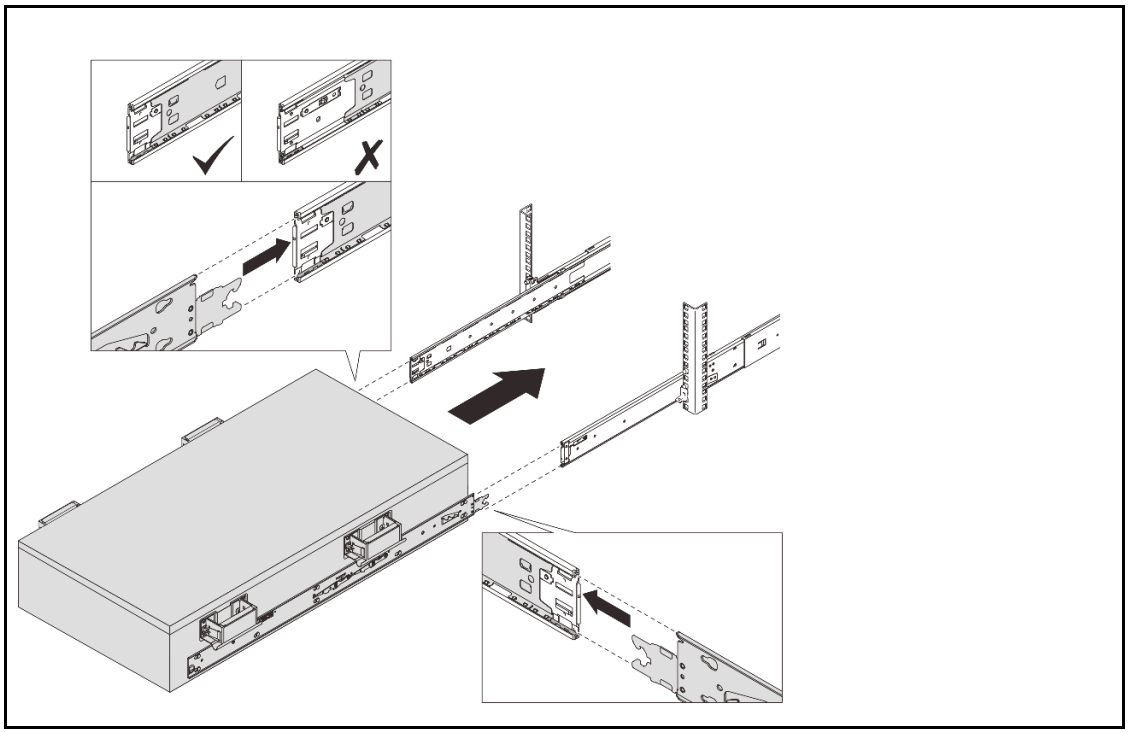

b. Remove the front and rear lift handles at both sides if installed.

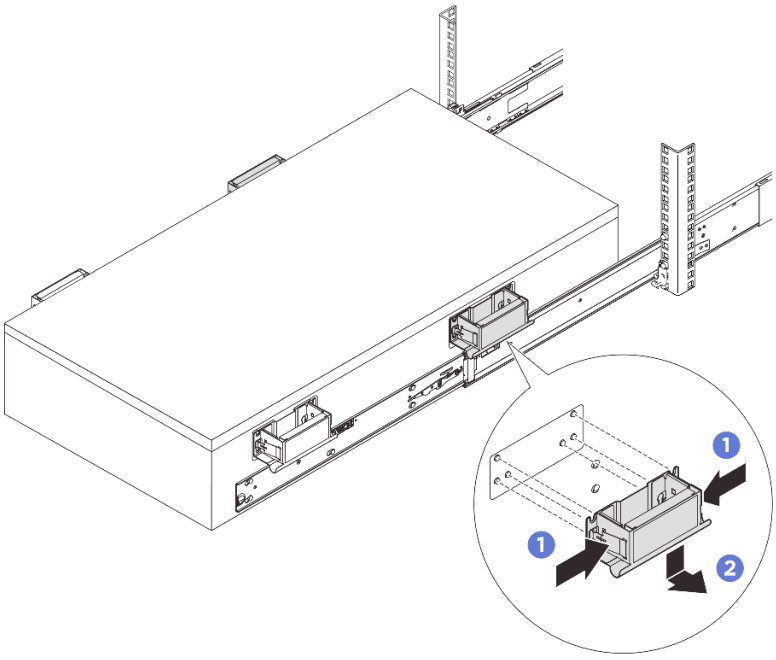

1 Pinch both flaps on the side of the handles.

2 Slide the handles down to remove them from the server.

Note: Make sure to remove all the lift handles before proceeding sliding in.

c. Lift the lock latches as shown to slide the server into the rack until it goes into place.

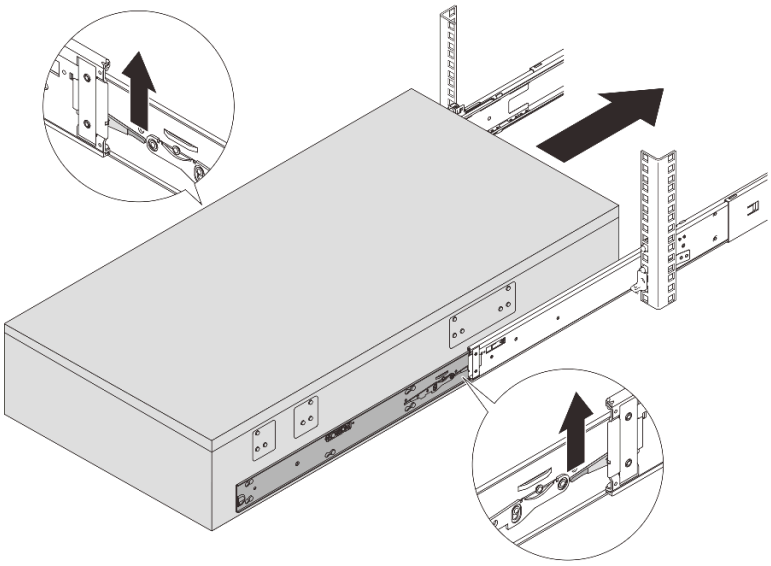

Attention: Slide the server all the way out and all the way back in to make sure the rails are working smoothly.

Step 8. Reinstall all the components that were removed previously.

Step 9. (Optional) Secure the server to the rack.

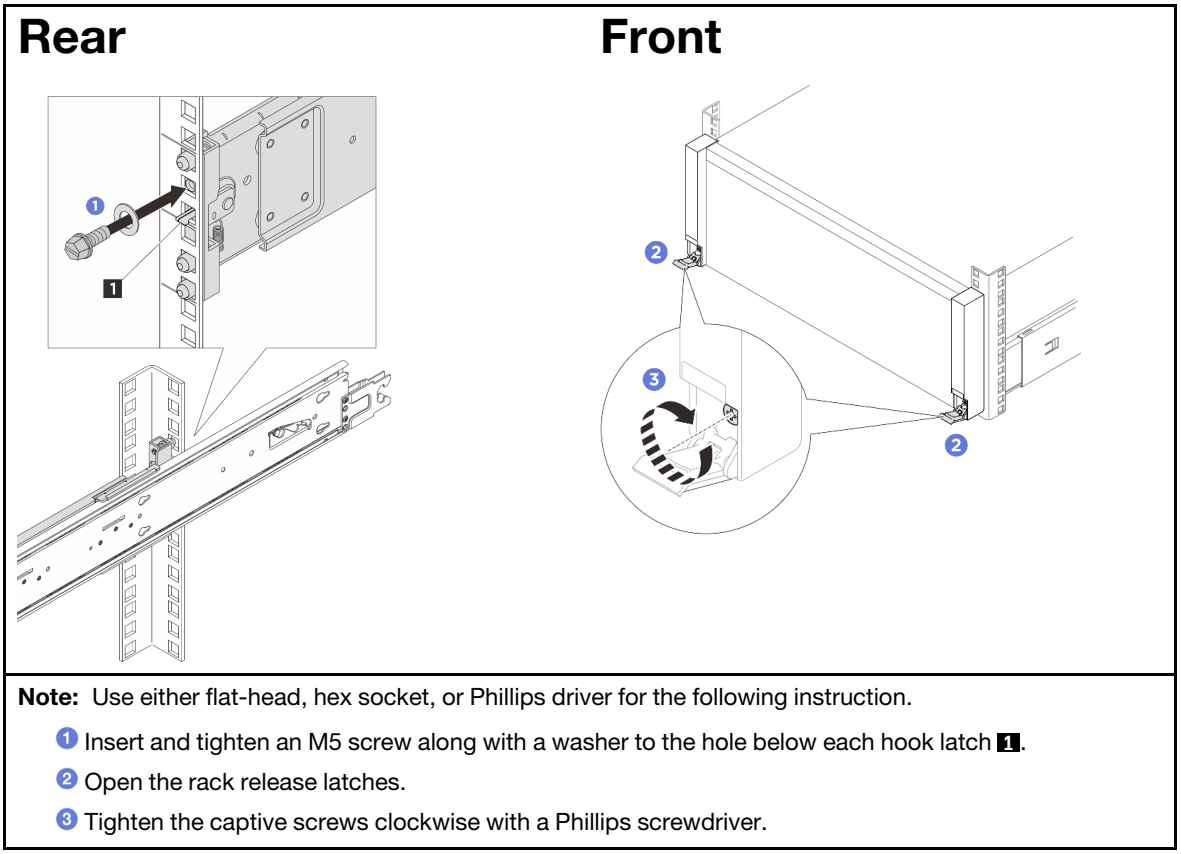

Note: Use either flat-head, hex socket, or Phillips driver for the following instruction.

1. Insert and tighten an M5 screw along with a washer to the hole below each hook latch 1.
2. Open the rack release latches.
3. Tighten the captive screws clockwise with a Phillips screwdriver.

After you finish

Complete the parts replacement. See “Complete the parts replacement” on page 382.

2.5-inch hot-swap drive replacement

Follow instructions in this section to remove and install a 2.5-inch hot-swap drive.

Remove a 2.5-inch hot-swap drive

Follow the instructions in this section to remove a 2.5-inch hot-swap drive.

About this task

Attention:

- Read “Installation Guidelines” on page 45 and “Safety inspection checklist” on page 46 to ensure that you work safely.
- Prevent exposure to static electricity, which might lead to system halt and loss of data, by keeping static-sensitive components in their static-protective packages until installation, and handling these devices with an electrostatic-discharge wrist strap or other grounding system.
- To make sure that there is adequate system cooling, do not operate the server for more than two minutes without either a drive or a filler installed in each bay.

- If one or more NVMe solid-state drives are to be removed, it is recommended to disable them beforehand via the operating system.
- Before you remove or make changes to drives, drive controllers (including controllers that are integrated on the system board), drive backplanes or drive cables, back up all important data that is stored on the drives.
- Before you remove any component of a RAID array (drive, RAID card, etc.), back up all RAID configuration information.

Note: Make sure you have the drive bay fillers available if some drive bays will be left empty after the removal.

Procedure

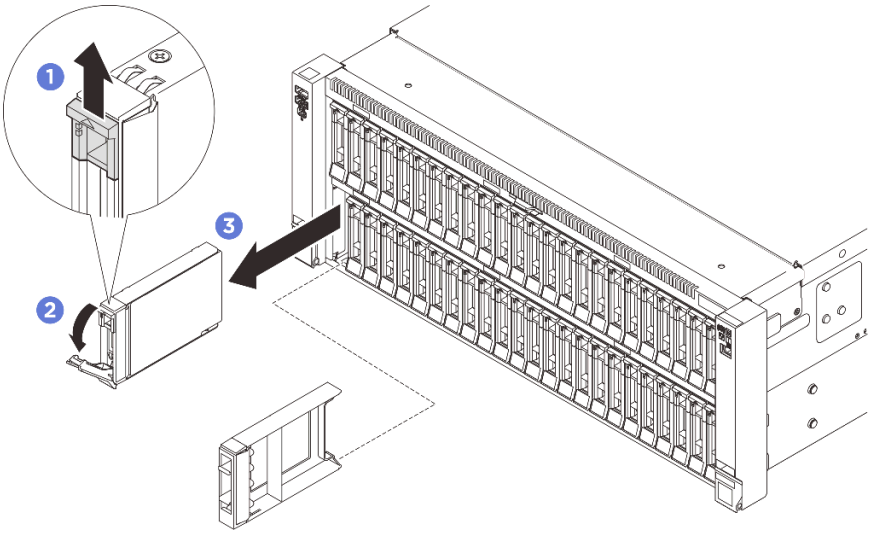

Figure 24. Removing a 2.5-inch drive

Step 1. Slide the release latch to open the tray handle.

Step 2. The tray handle opens automatically.

Step 3. Grasp and pull the handle to remove the drive from the drive bay.

After you finish

1. Install a replacement unit or filler. See “Install a 2.5-inch hot-swap drive” on page 98.
2. If you are instructed to return the component or optional device, follow all packaging instructions, and use any packaging materials for shipping that are supplied to you.

Demo video

Watch the procedure on YouTube

Install a 2.5-inch hot-swap drive

Follow the instructions in this section to install a 2.5-inch hot-swap drive.

About this task

Attention:

- Read “Installation Guidelines” on page 45 and “Safety inspection checklist” on page 46 to ensure that you work safely.
- Prevent exposure to static electricity, which might lead to system halt and loss of data, by keeping static-sensitive components in their static-protective packages until installation, and handling these devices with an electrostatic-discharge wrist strap or other grounding system.
- To make sure that there is adequate system cooling, do not operate the server for more than two minutes without either a drive or a drive bay filler installed in each bay.
- Before you make changes to drives, drive controllers (including controllers that are integrated on the system board assembly), drive backplanes, or drive cables, back up all important data that is stored on drives.
- Before you remove any component of a RAID array (drive, RAID card, etc.), back up all RAID configuration information.

Note: For a complete list of supported optional device for this server, see https://serverproven.lenovo.com.

Firmware and driver download: You might need to update the firmware or driver after replacing a component.

- Go to https://datacentersupport.lenovo.com/products/servers/thinksystem/sr860v4/7djn/downloads/driver-list to see the latest firmware and driver updates for your server.
- Go to “Update the firmware” on page 386 for more information on firmware updating tools.

Procedure

Step 1. Touch the static-protective package that contains the new part to any unpainted surface on the outside of the server; then, take the new part out of the package and place it on a static-protective surface.

Step 2. If a drive filler has been installed in the drive bay, remove it.

Step 3. Install the 2.5-inch drive.

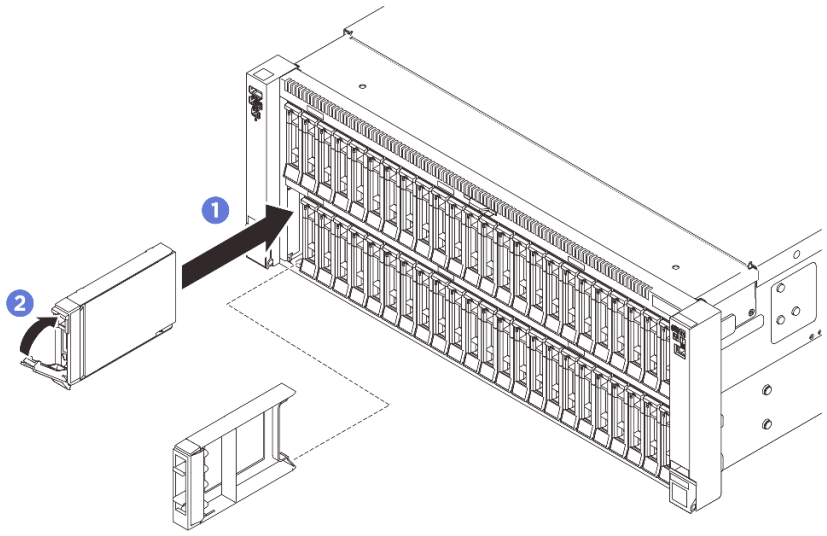

Figure 25. Installing a 2.5-inch drive

a. 1 Ensure that the tray handle is in the open position. Slide the drive into the drive bay, and push it until it stops.

b. 2 Rotate the handle back to the locked position.

After you finish

1. Check the drive status LED to verify if the drive is operating correctly.
   - If the yellow LED is lit continuously, it is malfunctioning and must be replaced.
   - If the green LED is flashing, the drive is functioning.

   Note: If the server is configured for RAID operation through a ThinkSystem RAID adapter, you might have to reconfigure your disk arrays after you install drives. See the ThinkSystem RAID adapter documentation for additional information about RAID operation and complete instructions for using ThinkSystem RAID adapter.
2. If any of the drive bays are left empty, fill them with drive bay fillers.
3. If you have installed a 2.5-inch drive backplane with U.3 NVMe drives for Trimode. Enable U.3 x1 mode for the selected drive slots on the backplane through the XCC web GUI. See “U.3 NVMe drive can be detected in NVMe connection, but cannot be detected in Tri-mode” on page 434.

Demo video

Watch the procedure on YouTube

2.5-inch drive backplane replacement

Follow the instructions in this section to install or remove a 2.5-inch drive backplane.

Remove a 2.5-inch drive backplane

Follow the instructions in this section to remove a 2.5-inch drive backplane.

About this task

Attention:

- Read “Installation Guidelines” on page 45 and “Safety inspection checklist” on page 46 to ensure that you work safely.
- Power off the server and peripheral devices and disconnect the power cords and all external cables. See “Power off the server” on page 61.
- Prevent exposure to static electricity, which might lead to system halt and loss of data, by keeping static-sensitive components in their static-protective packages until installation, and handling these devices with an electrostatic-discharge wrist strap or other grounding system.

Procedure

Step 1. If the server is installed in a rack, slide the server out on its rack slide rails to gain access to the top covers, or remove the server from the rack. See “Server replacement” on page 67.

Step 2. Remove the front top cover. See “Remove the front top cover” on page 369.

Step 3. Remove the front air baffle. See “Remove the front air baffle” on page 107.

Step 4. Remove the fans and the fan cage. See “Remove a fan” on page 150 and “Remove the fan cage” on page 152.

Step 5. Remove all the 2.5-inch hot-swap drives and drive fillers. See “Remove a 2.5-inch hot-swap drive” on page 97.

Step 6. Record the cable connections first; then, disconnect the power and signal cables from all the backplanes.

Step 7. Remove the drive backplane carrier assembly.

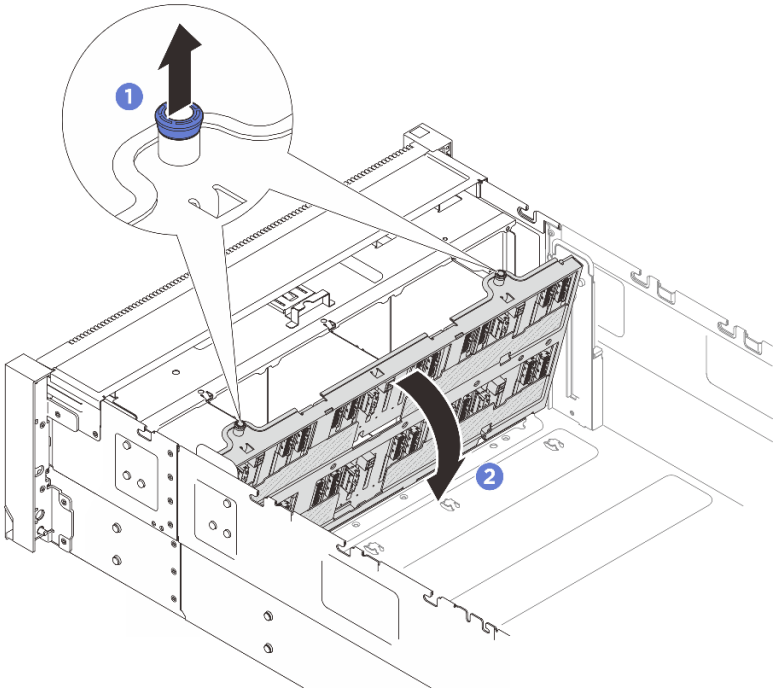

Figure 26. Removing drive backplane carrier assembly (2.5-inch bay chassis)

a. 1 Pull the plunger up to disengage the backplane carrier.
b. 2 Pivot the top of the backplane carrier away to remove it from the server.

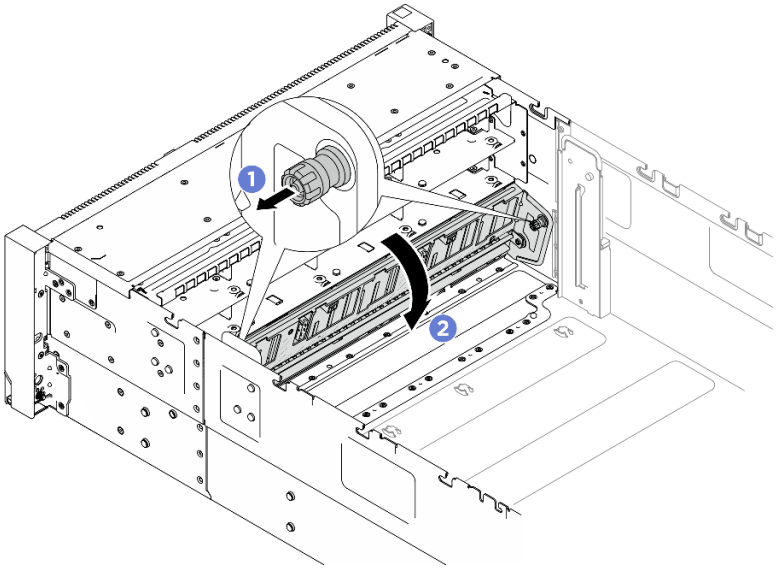

Figure 27. Removing drive backplane carrier assembly (E3.S bay chassis)

a. 1 Pull the plunger out to disengage the backplane carrier.
b. 2 Pivot the top of the backplane carrier away to remove it from the server.

Step 8. Remove the two screws that secure the backplane; then, remove the backplane from the drive backplane carrier.

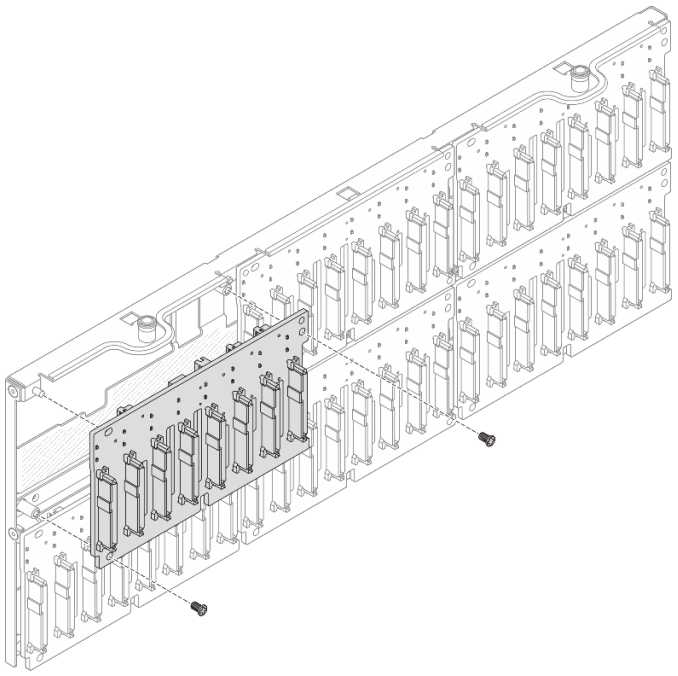

Figure 28. Removing backplane from carrier (2.5-inch bay chassis)

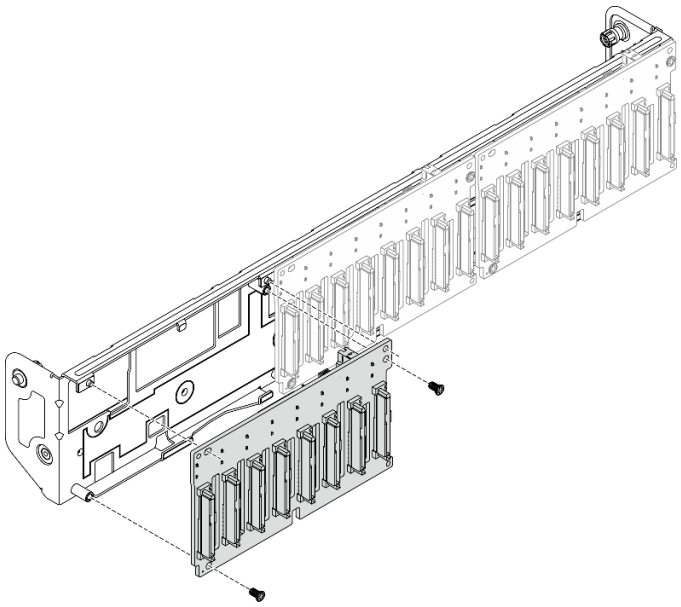

Figure 29. Removing backplane from carrier (E3.S bay chassis)

Step 9. If necessary, store the two screws back in the backplane carrier.

After you finish

1. Install a replacement unit or fill the corresponding drive bays with drive fillers. See “Install a 2.5-inch drive backplane” on page 103.

2. If you are instructed to return the component or optional device, follow all packaging instructions, and use any packaging materials for shipping that are supplied to you.

Demo video

Watch the procedure on YouTube

Install a 2.5-inch drive backplane

Follow instruction in this section to install a 2.5-inch drive backplane.

About this task

Attention:

- Read “Installation Guidelines” on page 45 and “Safety inspection checklist” on page 46 to ensure that you work safely.
- Power off the server and peripheral devices and disconnect the power cords and all external cables. See “Power off the server” on page 61.
- Prevent exposure to static electricity, which might lead to system halt and loss of data, by keeping static-sensitive components in their static-protective packages until installation, and handling these devices with an electrostatic-discharge wrist strap or other grounding system.
- Follow the backplane installation rules and order in “Drive backplane installation rules and order” on page 56.

Firmware and driver download: You might need to update the firmware or driver after replacing a component.

- Go to https://datacentersupport.lenovo.com/products/servers/thinksystem/sr860v4/7djn/downloads/driver-list to see the latest firmware and driver updates for your server.
- Go to “Update the firmware” on page 386 for more information on firmware updating tools.

Procedure

Step 1. If necessary, remove the two screws from the backplane carrier.

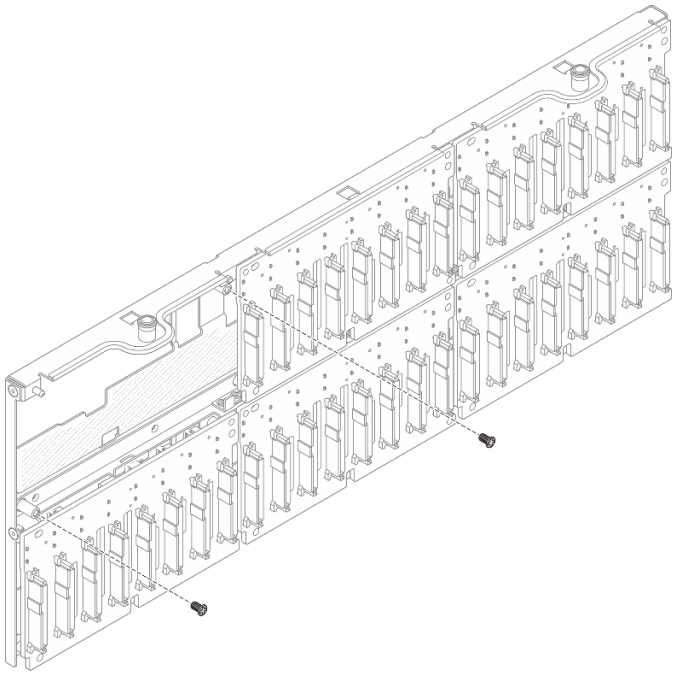

Figure 30. Spare screws on backplane carrier (2.5-inch bay chassis)

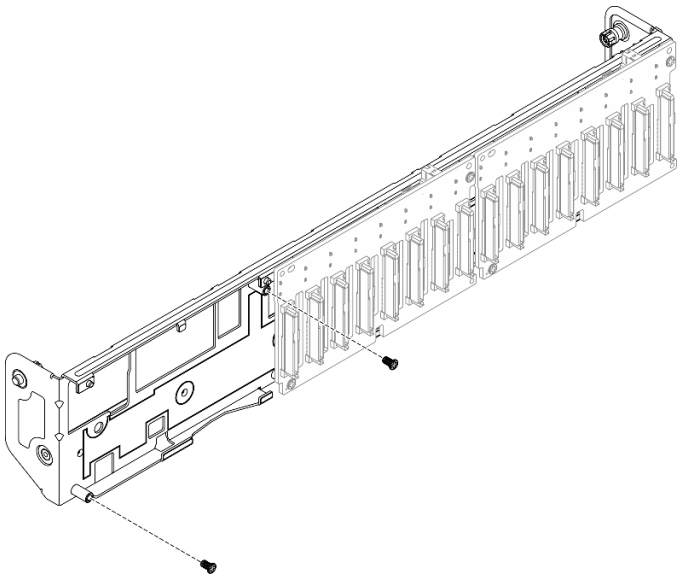

Figure 31. Spare screws on backplane carrier (E3.S bay chassis)

Step 2. Install backplane to carrier and secure with two screws.

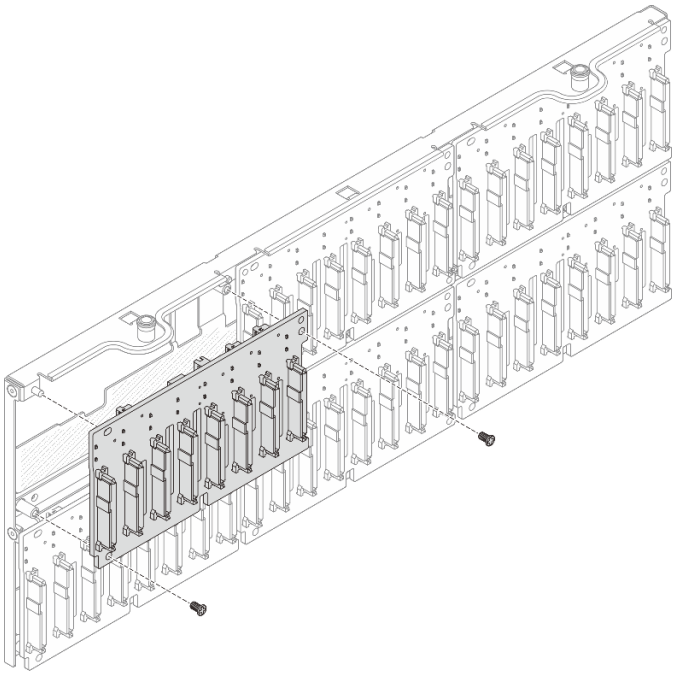

Figure 32. Installing backplane to carrier (2.5-inch bay chassis)

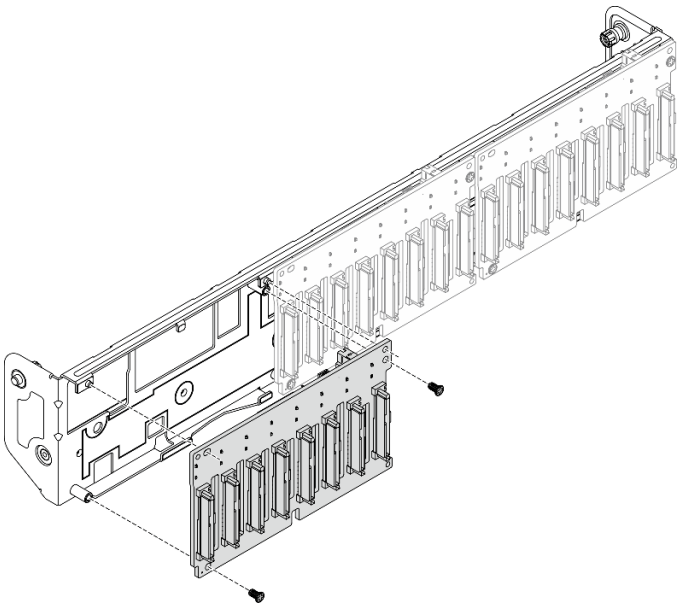

Figure 33. Installing backplane to carrier (E3.S bay chassis)

Step 3. Install the drive backplane carrier assembly.

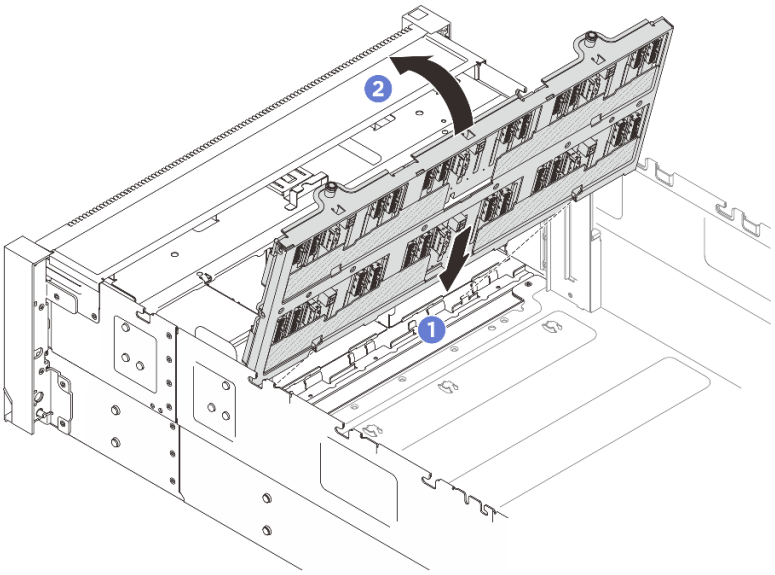

Figure 34. Installing drive backplane carrier assembly (2.5-inch bay chassis)

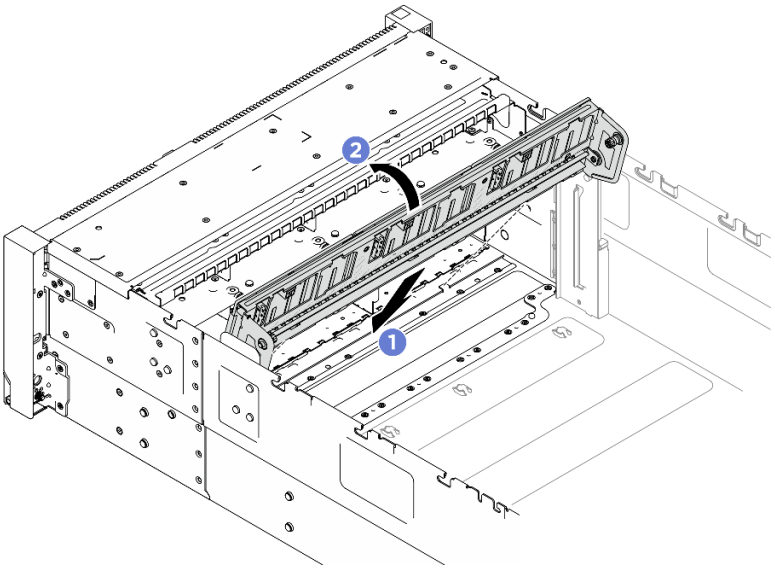

Figure 35. Installing drive backplane carrier assembly (E3.S bay chassis)

a. 1 Align the bottom of the carrier to the slots in the server.

b. 2 Pivot the top of the carrier until it clicks into place.

Step 4. Connect the power and signal cables to all the backplanes. See ***Internal Cable Routing Guide*** for more information on the internal cable routing.

After you finish

1. Reinstall all the 2.5-inch hot-swap drive and drive fillers. See "Install a 2.5-inch hot-swap drive" on page 98.
2. Reinstall the fans and the fan cage assembly. See "Install a fan" on page 155 and "Install the fan cage" on page 154.
3. Reinstall the front air baffle. See "Install the front air baffle" on page 109.

4. Reinstall the front top cover. See “Install the front top cover” on page 375.
5. Complete the parts replacement. See “Complete the parts replacement” on page 382.
6. If you have installed a 2.5-inch drive backplane with U.3 NVMe drives for Trimode. Enable U.3 x1 mode for the selected drive slots on the backplane through the XCC web GUI. See “U.3 NVMe drive can be detected in NVMe connection, but cannot be detected in Tri-mode” on page 434.

Demo video

Watch the procedure on YouTube

Air baffle replacement

Follow the instructions in this section to remove and install the air baffle.

Remove the front air baffle

Follow the instructions in this section to remove the front air baffle.

About this task

Attention:

- Read “Installation Guidelines” on page 45 and “Safety inspection checklist” on page 46 to ensure that you work safely.
- Power off the server and peripheral devices and disconnect the power cords and all external cables. See “Power off the server” on page 61.
- If you intend to install memory modules in the server, you must first remove the air baffle from the server.

Procedure

Step 1. If the server is installed in a rack, slide the server out on its rack slide rails to gain access to the top covers, or remove the server from the rack. See “Server replacement” on page 67.

Step 2. Remove the front top cover. See “Remove the front top cover” on page 369.

Step 3. If a flash power module is installed, disconnect the cable of the RAID flash power module from the extension cable.

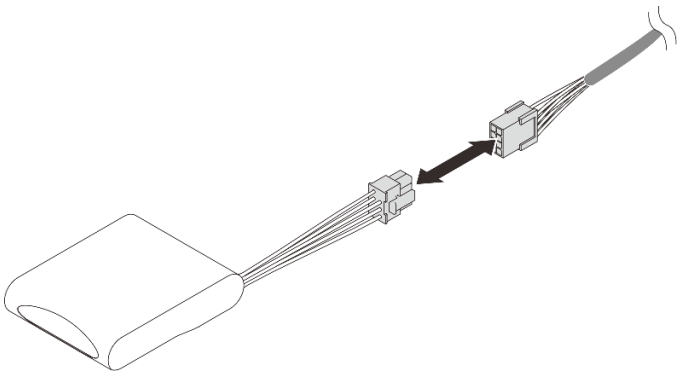

Figure 36. Disconnecting cable from flash power module

Step 4. If the M.2 boot adapter is installed on the front air baffle, disconnect the M.2 boot adapter cables from the M.2 boot adapter.

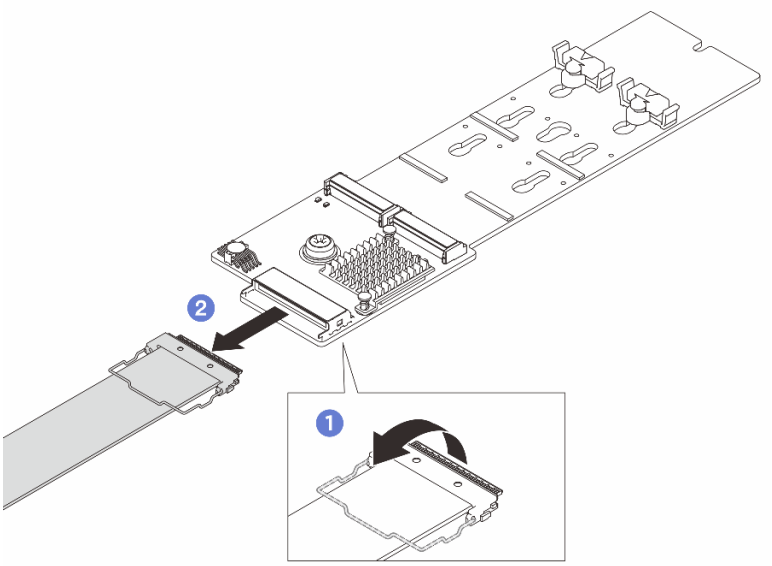

Figure 37. M.2 boot adapter cable disconnection

a. 1 Unhook the wire bail on the cable from the connector.

b. 2 Disconnect the cables from the M.2 boot adapter.

Step 5. Lift the cables routed through the front air baffle and set them aside.

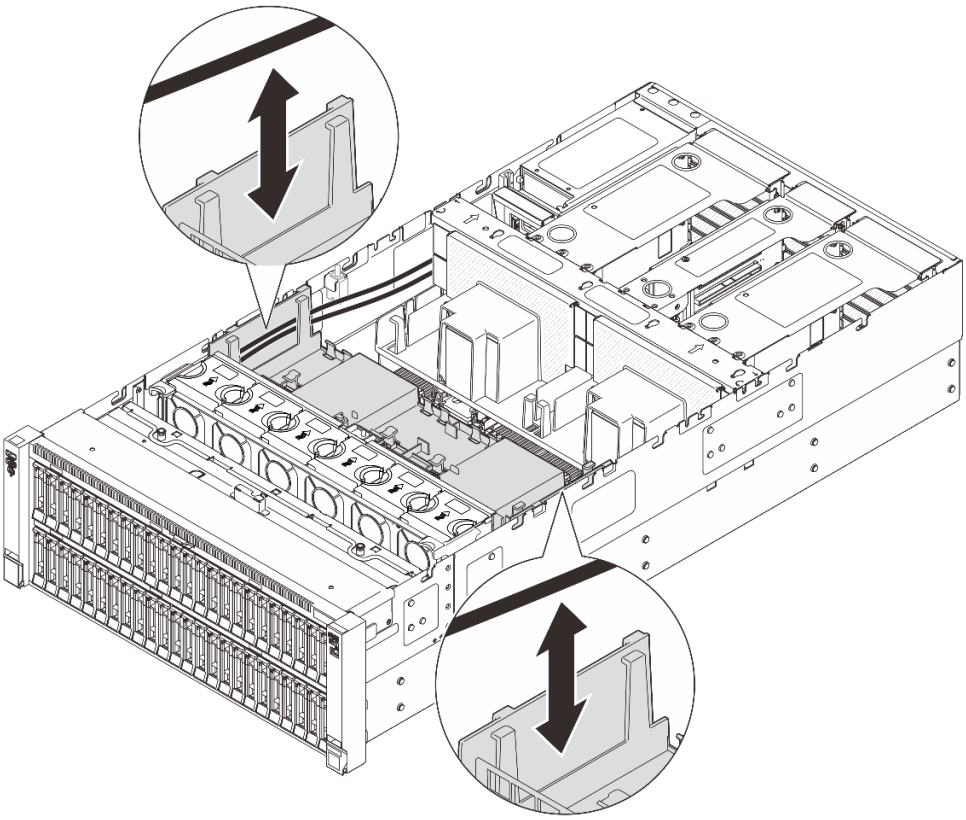

Figure 38. Lifting cable out of front air baffle

Step 6. Grasp the front air baffle and carefully lift it out of the chassis.

Attention: For proper cooling and airflow, reinstall the front and rear air baffles before you turn on the server. Operating the server with the air baffle removed might damage server components.

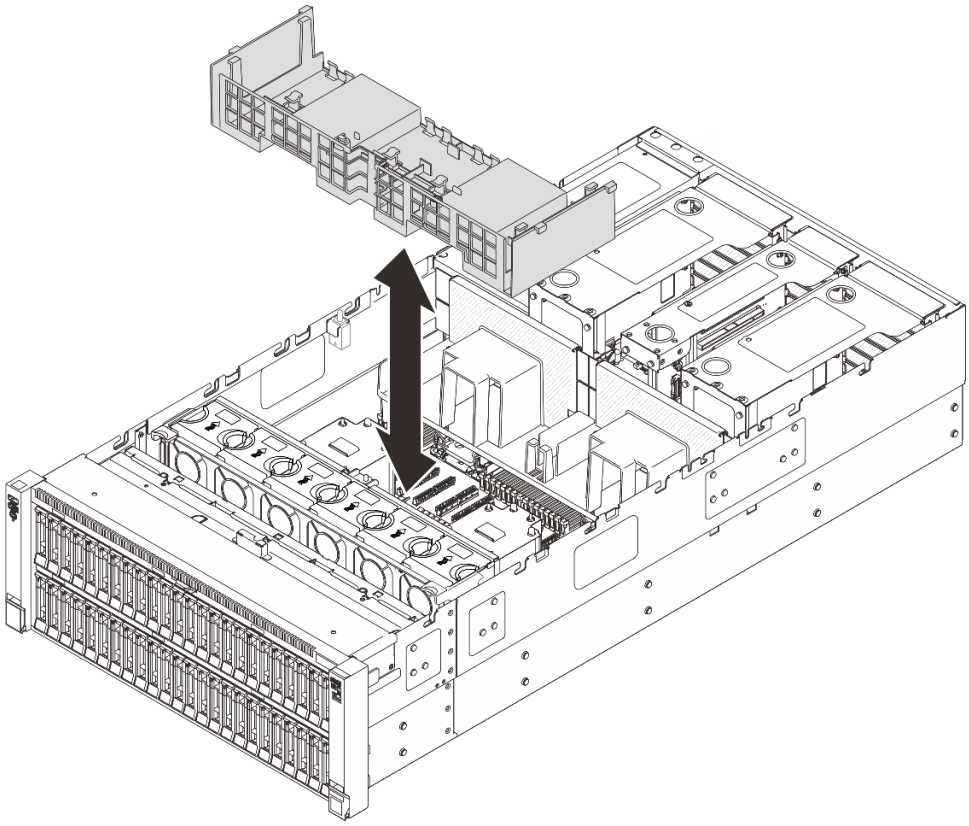

Figure 39. Removing front air baffle

After you finish

1. If you plan to replace the front air baffle, remove the following.
   a. Remove all flash power modules. See “Remove a flash power module” on page 157.
   b. Remove the M.2 boot adapter. See “Remove the M.2 boot adapter” on page 175.
2. Install a replacement unit. See “Install the front air baffle” on page 109.
3. If you are instructed to return the component or optional device, follow all packaging instructions, and use any packaging materials for shipping that are supplied to you.

Demo video

Watch the procedure on YouTube

Install the front air baffle

Follow the instructions in this section to install the front air baffle.

About this task

Attention:

- Read “Installation Guidelines” on page 45 and “Safety inspection checklist” on page 46 to ensure that you work safely.
- Power off the server and peripheral devices and disconnect the power cords and all external cables. See “Power off the server” on page 61.
- If you intend to install memory modules in the server, you must first remove the air baffle from the server.
- For proper cooling and airflow, reinstall the front and rear air baffles before you turn on the server. Operating the server with the air baffle removed might damage server components.

Procedure

Step 1. Align the front air baffle tabs with the front air baffle slots on both sides of the chassis; then, lower the front air baffle into the server.

Note: Close the retaining clip on each end of the memory module connector before installing the air baffle for proper cooling.

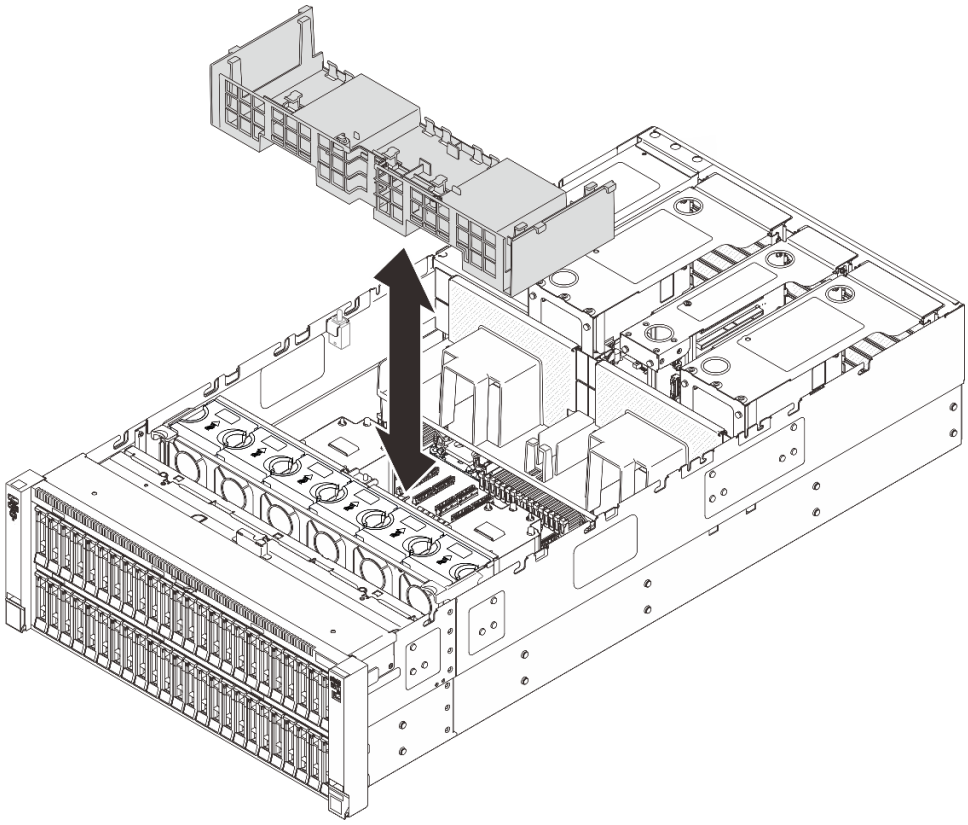

Figure 40. Installing front air baffle

Step 2. Slightly press the front air baffle down until it is securely seated.

Step 3. Route the cables through the front air baffle.

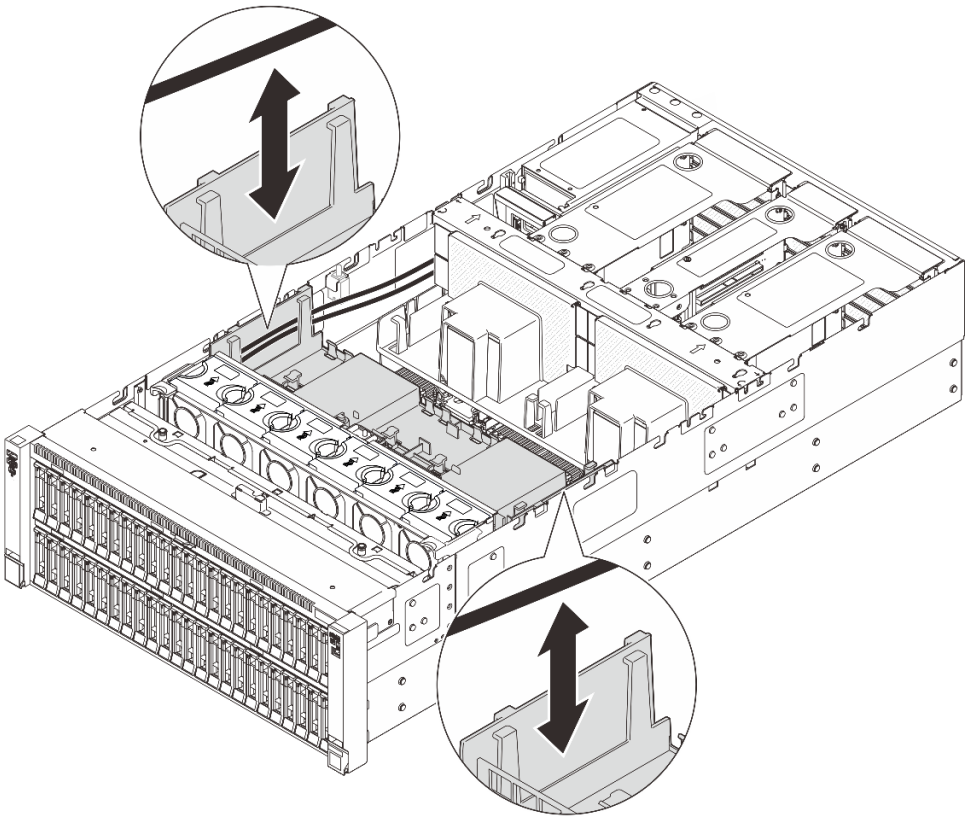

Figure 41. Routing cable through front air baffle

Step 4. If needed, reconnect the M.2 boot adapter cable to the M.2 backplane.

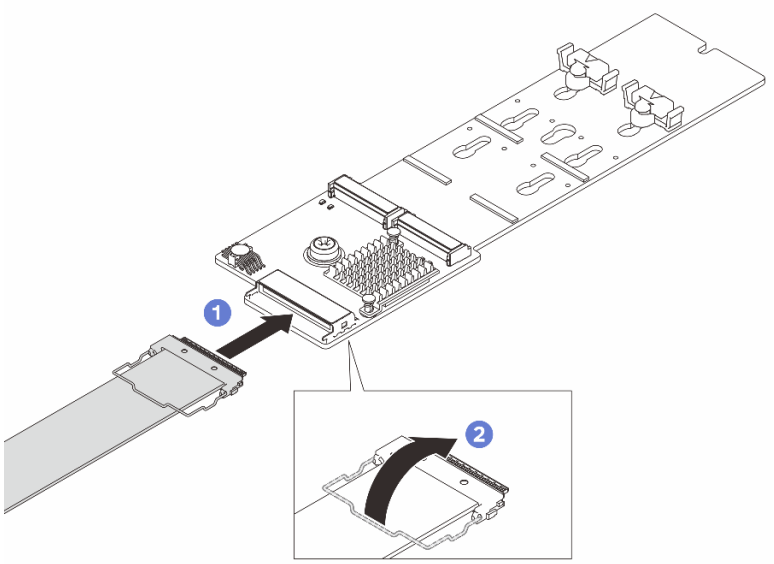

Figure 42. M.2 boot adapter cable connection

a. 1 Connect the cable to the M.2 boot adapter.

b. 2 Hook the wire bail on the cable onto the connector.

Step 5. If needed, connect the flash power module to an adapter with the extension cable that comes with the flash power module. See ***Internal Cable Routing Guide*** for more information on the internal cable routing.

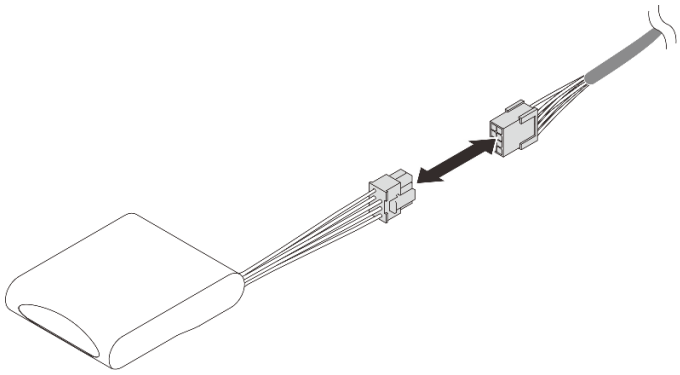

Figure 43. Connecting cable to flash power module

After you finish

1. If you replaced the front air baffle, reinstall the following.
   a. Reinstall the M.2 boot adapter. See "Install the M.2 boot adapter" on page 177.
   b. Reinstall all flash power modules. See "Install a flash power module" on page 159.
2. Reinstall the front top cover. See "Install the front top cover" on page 375.
3. Complete the parts replacement. See "Complete the parts replacement" on page 382.

Demo video

Watch the procedure on YouTube

Remove the rear air baffle

Follow the instructions in this section to remove the rear air baffle.

About this task

Attention:

- Read "Installation Guidelines" on page 45 and "Safety inspection checklist" on page 46 to ensure that you work safely.
- Power off the server and peripheral devices and disconnect the power cords and all external cables. See "Power off the server" on page 61.
- If you intend to install memory modules in the server, you must first remove the air baffle from the server.

Procedure

Step 1. If the server is installed in a rack, slide the server out on its rack slide rails to gain access to the top covers, or remove the server from the rack. See "Server replacement" on page 67.

Step 2. Remove the front top cover. See "Remove the front top cover" on page 369.

Step 3. Remove the rear top cover. See "Remove the rear top cover" on page 371.

Step 4. Remove the crossbar. See "Remove the crossbar" on page 125.

Step 5. Remove all PCIe risers. See “Remove the PCIe riser” on page 249.

Step 6. Remove the power cable routed through the rear air baffle and set it aside.

Step 7. Record the cable connections first; then, lift the cables routed through the rear air baffle and set them aside.

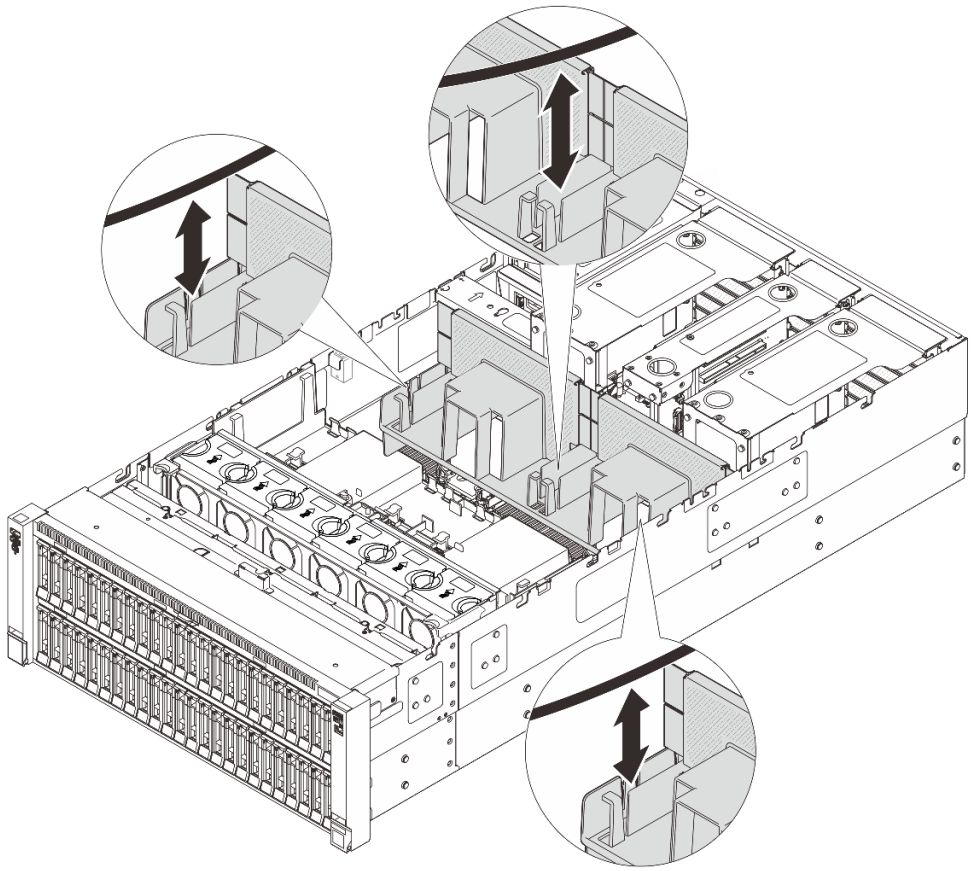

Figure 44. Lifting cable out of rear air baffle

Step 8. Grasp the rear air baffle and carefully lift it out of the chassis.

Note: For proper cooling and airflow, reinstall the front and rear air baffles before you turn on the server. Operating the server with the air baffle removed might damage server components.

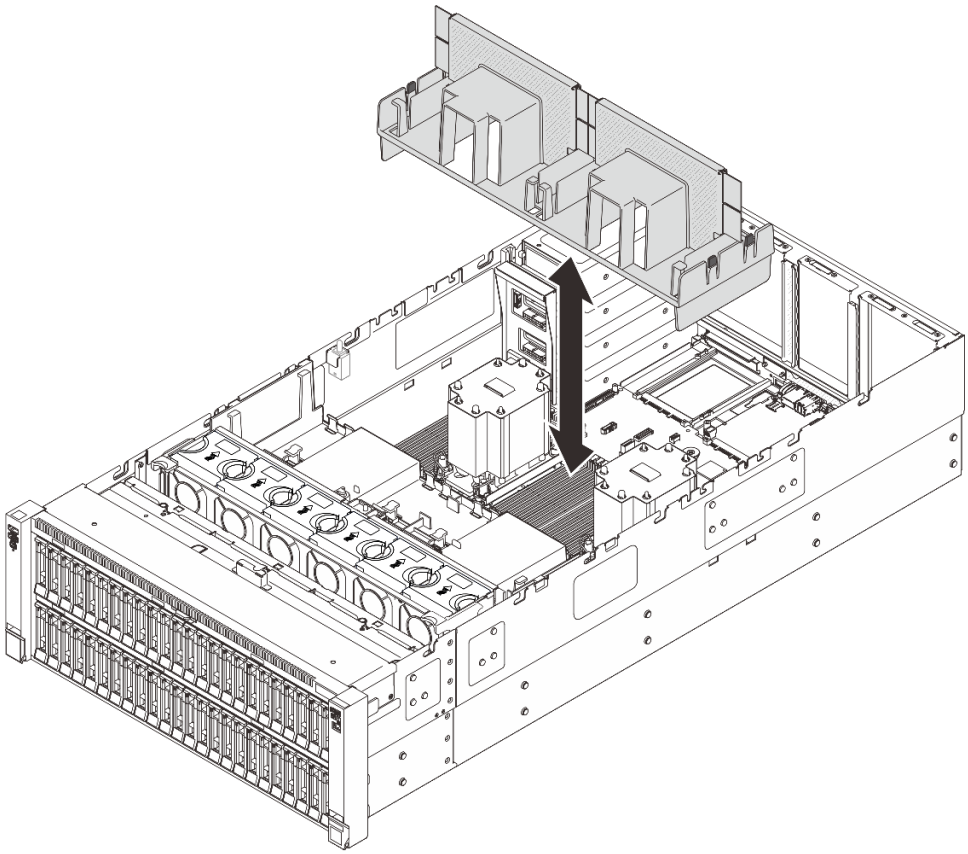

Figure 45. Removing rear air baffle for 3U standard PHM

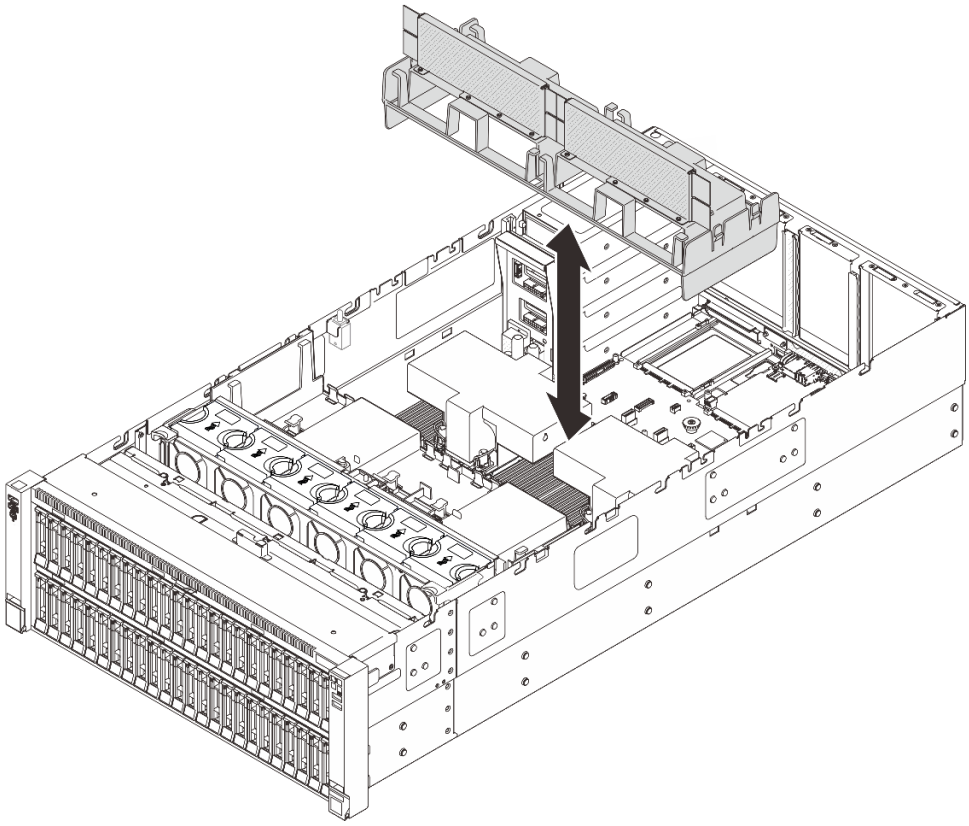

Figure 46. Removing rear air baffle for 2U performance PHM

After you finish

1. Install a replacement unit. See “Install the rear air baffle” on page 115.
2. If you are instructed to return the component or optional device, follow all packaging instructions, and use any packaging materials for shipping that are supplied to you.

Demo video

Watch the procedure on YouTube

Install the rear air baffle

Follow the instructions in this section to install the rear air baffle.

About this task

Attention:

- Read “Installation Guidelines” on page 45 and “Safety inspection checklist” on page 46 to ensure that you work safely.
- Power off the server and peripheral devices and disconnect the power cords and all external cables. See “Power off the server” on page 61.
- If you intend to install memory modules in the server, you must first remove the air baffle from the server.

- For proper cooling and airflow, reinstall the front and rear air baffles before you turn on the server. Operating the server with the air baffle removed might damage server components.

Procedure

Step 1. Align the rear air baffle tabs with the rear air baffle slots on both sides of the chassis; then, lower the rear air baffle into the server.

Note: Close the retaining clip on each end of the memory module connector before installing the air baffle for proper cooling.

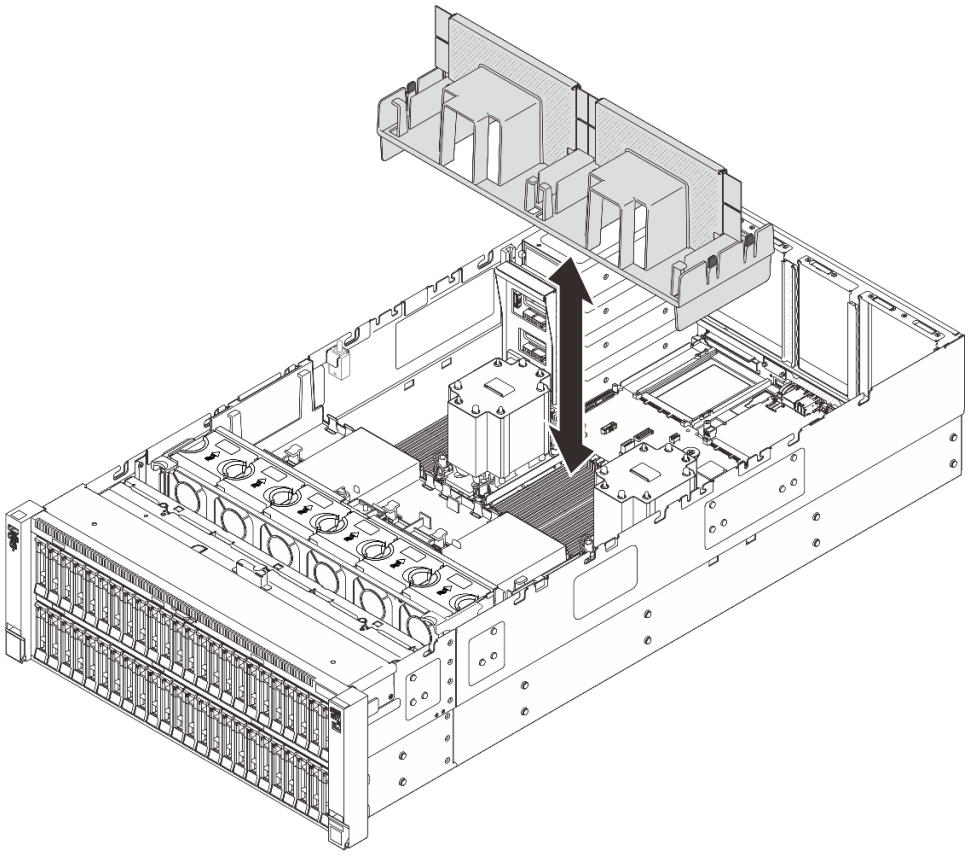

Figure 47. Installing rear air baffle for 3U standard PHM

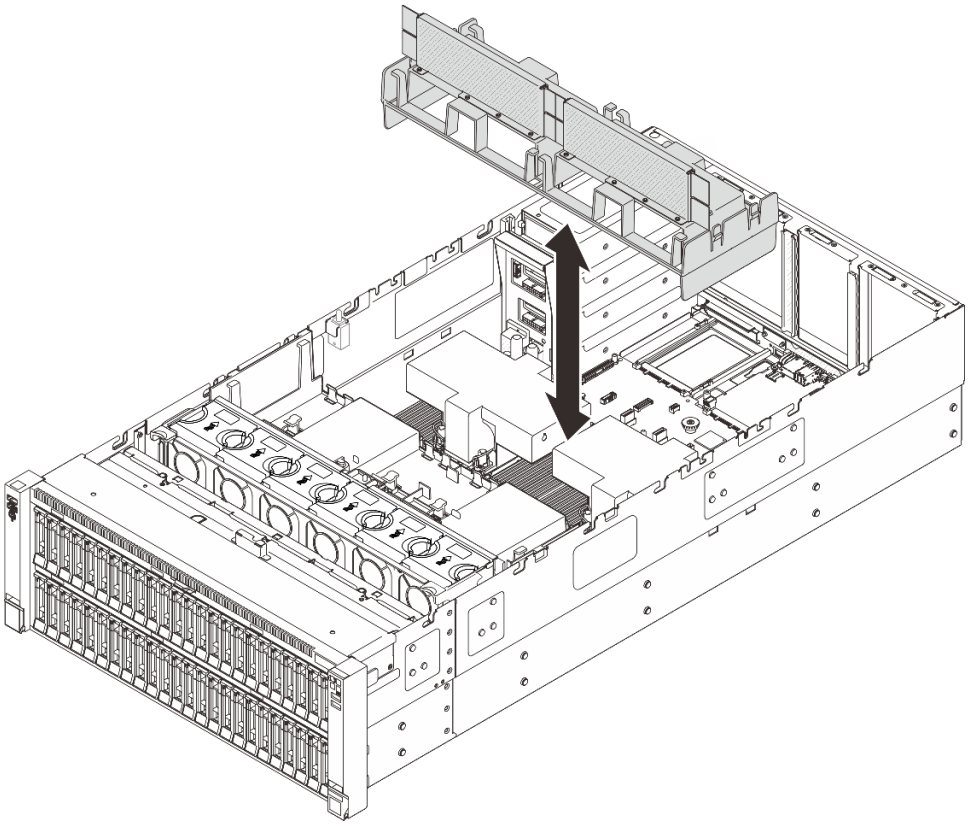

Figure 48. Installing rear air baffle for 2U performance PHM

Step 2. Slightly press the rear air baffle down until it is securely seated.

Step 3. Route the cables through the rear air baffle.

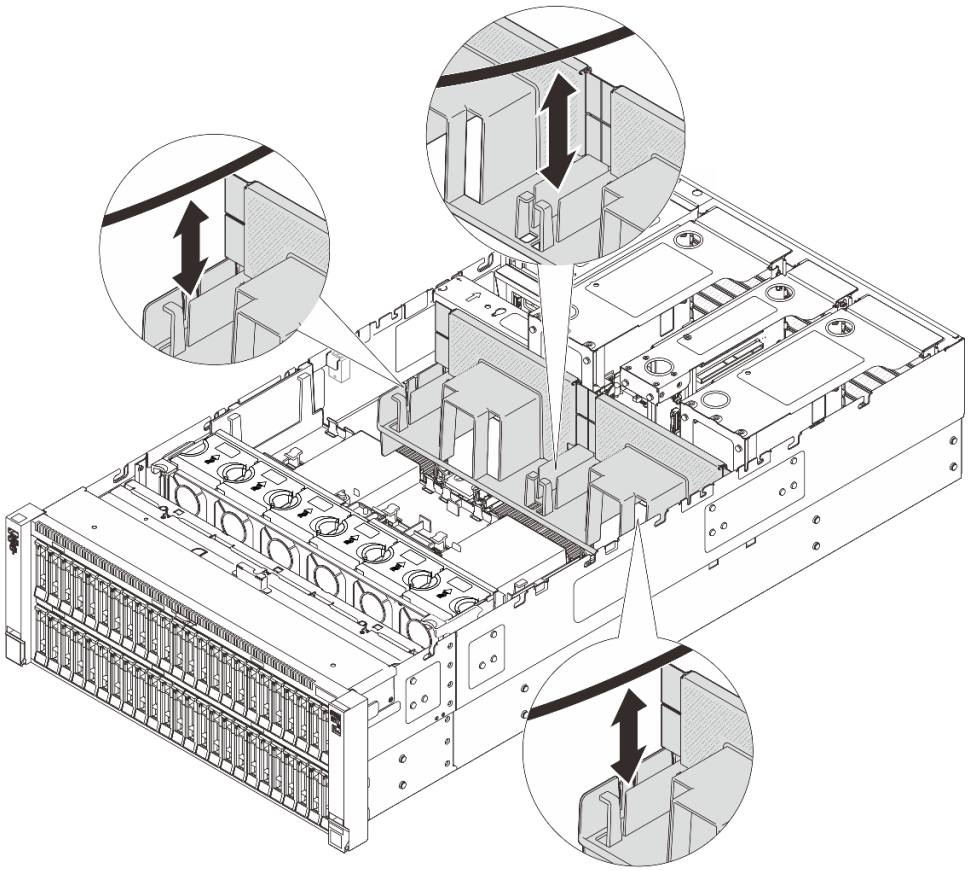

Figure 49. Routing cable through rear air baffle

Step 4. Route the power cable through the rear air baffle. See ***Internal Cable Routing Guide*** for more information on the internal cable routing.

After you finish

1. Reinstall the PCIe risers. See “Install the PCIe riser” on page 261.
2. Reinstall the crossbar. See “Install the crossbar” on page 128.
3. Reinstall the rear top cover. See “Install the rear top cover” on page 373.
4. Reinstall the front top cover. See “Install the front top cover” on page 375.
5. Complete the parts replacement. See “Complete the parts replacement” on page 382.

Demo video

Watch the procedure on YouTube

CMOS battery (CR2032) replacement

Follow the instructions in this section to remove or install the CMOS battery.

Remove the CMOS battery (CR2032)

Follow the instructions in this section to remove the CMOS battery.

About this task

The following notes describe information that you must consider when replacing the battery:

- Lenovo has designed this product with your safety in mind. The lithium CMOS battery must be handled correctly to avoid possible danger. If you replace the CMOS battery, you must adhere to local ordinances or regulations for battery disposal.
- If you replace the original lithium battery with a heavy-metal battery or a battery with heavy-metal components, be aware of the following environmental consideration. Batteries and accumulators that contain heavy metals must not be disposed of with normal domestic waste. They will be taken back free of charge by the manufacturer, distributor, or representative, to be recycled or disposed of in a proper manner.
- After you replace the CMOS battery, you must reconfigure the server and reset the system date and time.

S002

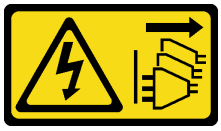

CAUTION:
The power-control button on the device and the power switch on the power supply do not turn off the electrical current supplied to the device. The device also might have more than one power cord. To remove all electrical current from the device, ensure that all power cords are disconnected from the power source.

S004



CAUTION:
When replacing the lithium battery, use only Lenovo specified part number or an equivalent type of battery recommended by the manufacturer. If your system has a module containing a lithium battery, replace it only with the same module type made by the same manufacturer. The battery contains lithium and can explode if not properly used, handled, or disposed of.

Do not:

- **Throw or immerse into water**
- **Heat to more than 100°C (212°F)**
- **Repair or disassemble**

Dispose of the battery as required by local ordinances or regulations.

S005



CAUTION:
The battery is a lithium ion battery. To avoid possible explosion, do not burn the battery. Exchange it only with the approved part. Recycle or discard the battery as instructed by local regulations.

Attention:

- Read "Installation Guidelines" on page 45 and "Safety inspection checklist" on page 46 to ensure that you work safely.
- Power off the server and peripheral devices and disconnect the power cords and all external cables. See "Power off the server" on page 61.
- Prevent exposure to static electricity, which might lead to system halt and loss of data, by keeping static-sensitive components in their static-protective packages until installation, and handling these devices with an electrostatic-discharge wrist strap or other grounding system.

Procedure

Step 1. If the server is installed in a rack, slide the server out on its rack slide rails to gain access to the top covers, or remove the server from the rack. See "Server replacement" on page 67.

Step 2. Remove the front top cover. See "Remove the front top cover" on page 369.

Step 3. Remove the rear top cover. See "Remove the rear top cover" on page 371.

Step 4. Remove the crossbar. See "Remove the crossbar" on page 125.

Step 5. Remove the PCIe risers. See "Remove the PCIe riser" on page 249.

Step 6. Locate the CMOS battery 1 on the system board assembly.

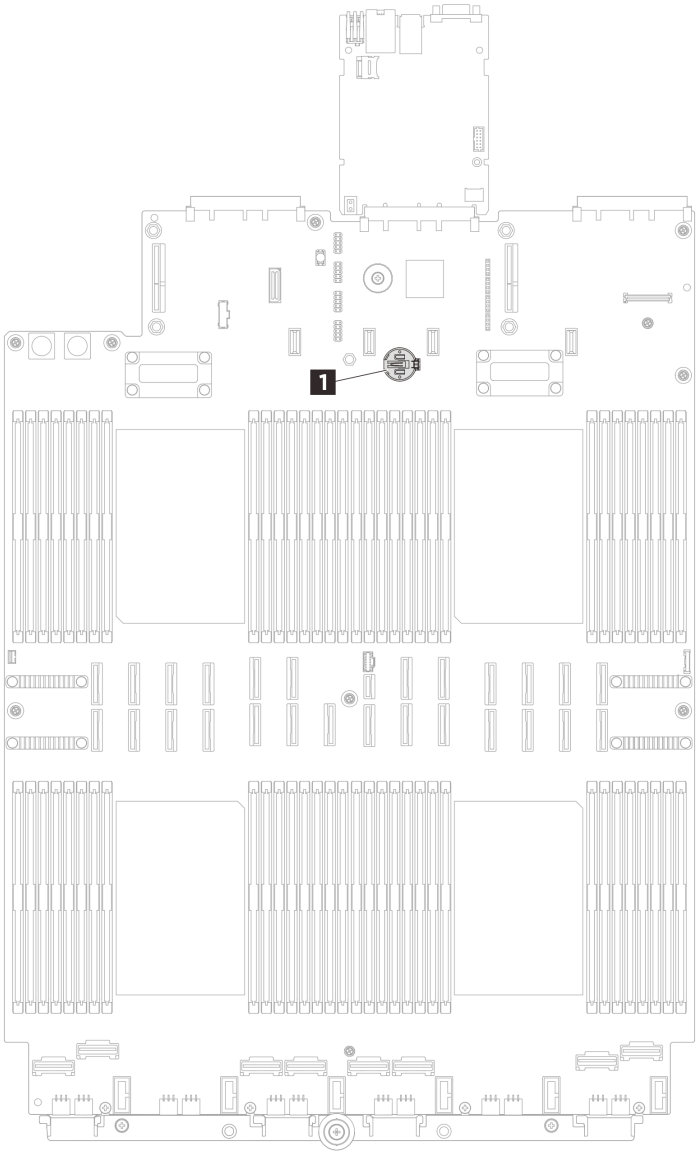

Figure 50. CMOS battery location

Step 7. Open the battery clip as shown and carefully take the CMOS battery out of the socket.

Attention:

- Failing to remove the CMOS battery properly might damage the socket on the system board assembly. Any damage to the socket might require replacing the system board assembly.
- Do not tilt or push the CMOS battery by using excessive force.

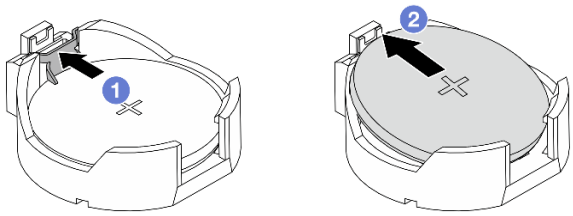

Figure 51. CMOS battery removal

a. 1 Press the clip on the CMOS battery socket.
b. 2 Remove the CMOS battery.

After you finish

1. Install a replacement unit. See "Install the CMOS battery (CR2032)" on page 122.
2. Dispose of the CMOS battery as required by local ordinances or regulations.

Demo video

Watch the procedure on YouTube

Install the CMOS battery (CR2032)

Follow the instructions in this section to install the CMOS battery.

About this task

- When replacing the CMOS battery, you must replace it with another CMOS battery of the same type from the same manufacturer.
- After you replace the CMOS battery, you must reconfigure the server and reset the system date and time.
- To avoid possible danger, read and follow the following safety statement.

S002

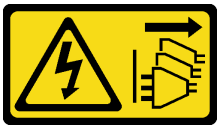

CAUTION:
The power-control button on the device and the power switch on the power supply do not turn off the electrical current supplied to the device. The device also might have more than one power cord. To remove all electrical current from the device, ensure that all power cords are disconnected from the power source.

S004



CAUTION:

When replacing the lithium battery, use only Lenovo specified part number or an equivalent type of battery recommended by the manufacturer. If your system has a module containing a lithium battery, replace it only with the same module type made by the same manufacturer. The battery contains lithium and can explode if not properly used, handled, or disposed of.

Do not:

- **Throw or immerse into water**
- **Heat to more than 100°C (212°F)**
- **Repair or disassemble**

Dispose of the battery as required by local ordinances or regulations.

S005



CAUTION:
The battery is a lithium ion battery. To avoid possible explosion, do not burn the battery. Exchange it only with the approved part. Recycle or discard the battery as instructed by local regulations.

Attention:

- Read "Installation Guidelines" on page 45 and "Safety inspection checklist" on page 46 to ensure that you work safely.
- Power off the server and peripheral devices and disconnect the power cords and all external cables. See "Power off the server" on page 61.
- Prevent exposure to static electricity, which might lead to system halt and loss of data, by keeping static-sensitive components in their static-protective packages until installation, and handling these devices with an electrostatic-discharge wrist strap or other grounding system.

Note: Follow any special handling and installation instructions that come with the replacement battery.

Procedure

Step 1. Touch the static-protective package that contains the new part to any unpainted surface on the outside of the server; then, take the new part out of the package and place it on a static-protective surface.

Step 2. Locate the CMOS battery 1 on the system board assembly.

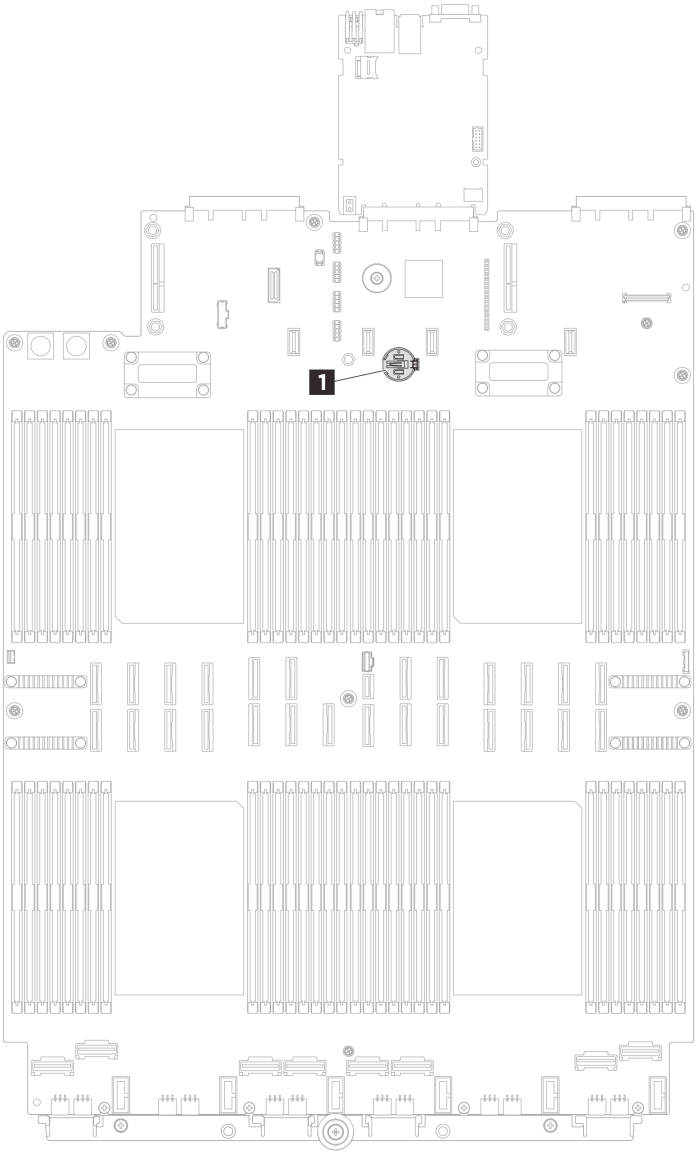

Figure 52. CMOS battery location

Step 3. Install the CMOS battery. Ensure that the CMOS battery is seated in place.

Note: Before you install the battery into the socket, make sure that the positive side faces upward.

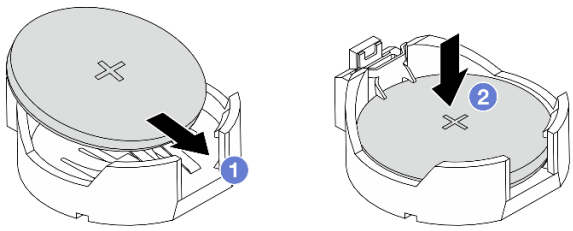

Figure 53. CMOS battery installation

a. 1 Tilt the battery and insert it to the socket.

b. ❷ Press the battery down until it clicks into the socket.

After you finish

1. Reinstall the PCIe risers. See “Install the PCIe riser” on page 261.
2. Reinstall the crossbar. See “Install the crossbar” on page 128.
3. Reinstall the rear top cover. See “Install the rear top cover” on page 373.
4. Reinstall the front top cover. See “Install the front top cover” on page 375.
5. Complete the parts replacement. See “Complete the parts replacement” on page 382.
6. Use the Setup utility to set the date, time, and any passwords.

   Note: After you install the CMOS battery, you must reconfigure the server and reset the system date and time.

Demo video

Watch the procedure on YouTube

Crossbar replacement

Follow the instructions in this section to remove and install a crossbar.

Remove the crossbar

Follow the instructions in this section to remove the crossbar.

About this task

Attention:

- Read “Installation Guidelines” on page 45 and “Safety inspection checklist” on page 46 to ensure that you work safely.
- Power off the server and peripheral devices and disconnect the power cords and all external cables. See “Power off the server” on page 61.
- Prevent exposure to static electricity, which might lead to system halt and loss of data, by keeping static-sensitive components in their static-protective packages until installation, and handling these devices with an electrostatic-discharge wrist strap or other grounding system.
- If the server is installed in a rack, slide the server out on its rack slide rails to gain access to the top covers, or remove the server from the rack. See “Server replacement” on page 67.



Figure 54. Crossbar location

1 Crossbar location for full-length PCIe risers	2 Crossbar location for half-length PCIe risers

Note: The illustrations show how to remove a crossbar from a chassis with half-length PCIe risers. The removal procedure is similar for full-length PCIe risers.

Procedure

Step 1. If the server is installed in a rack, slide the server out on its rack slide rails to gain access to the top covers, or remove the server from the rack. See “Server replacement” on page 67.

Step 2. Remove the front top cover. See “Remove the front top cover” on page 369.

Step 3. Remove the rear top cover. See “Remove the rear top cover” on page 371.

Step 4. Disconnect all external cables from the PCIe adapters.

Step 5. Disengage PCIe riser 1 from the crossbar.

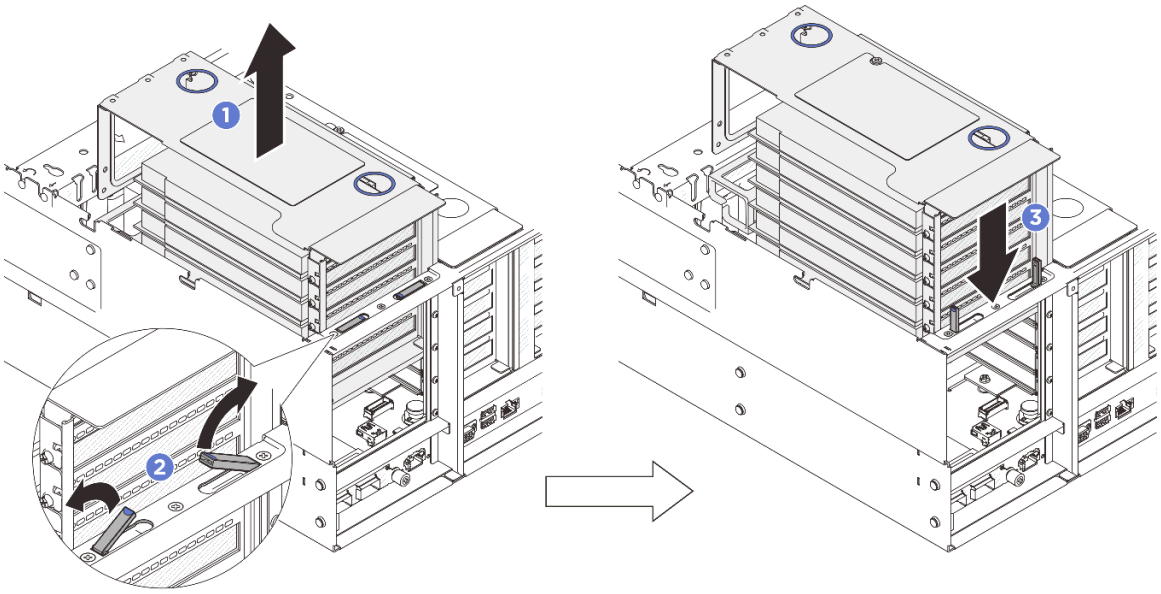

Figure 55. Disengaging PCIe riser

a. 1 Slightly lift the PCIe riser out of the chassis.
b. 2 Lift the kickstand(s) outward.
c. 3 Place the PCIe riser on top of the kickstand(s).

Step 6. Repeat Step 5 on page 126 to disengage the other two PCIe risers.

Step 7. Remove the crossbar.

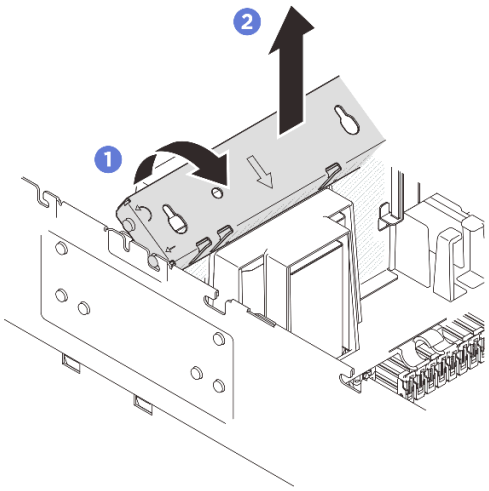

Figure 56. Removing crossbar

a. 1 Rotate the crossbar towards the rear of the server.
b. 2 Grasp and lift the crossbar to remove it from the chassis.

After you finish

1. Install a replacement unit. See "Install the crossbar" on page 128.

2. If you are instructed to return the component or optional device, follow all packaging instructions, and use any packaging materials for shipping that are supplied to you.

Demo video

Watch the procedure on YouTube

Install the crossbar

Follow the instructions in this section to install the crossbar.

About this task

Attention:

- Read “Installation Guidelines” on page 45 and “Safety inspection checklist” on page 46 to ensure that you work safely.
- Power off the server and peripheral devices and disconnect the power cords and all external cables. See “Power off the server” on page 61.
- Prevent exposure to static electricity, which might lead to system halt and loss of data, by keeping static-sensitive components in their static-protective packages until installation, and handling these devices with an electrostatic-discharge wrist strap or other grounding system.



Figure 57. Crossbar location

1 Crossbar location for full-length PCIe risers	2 Crossbar location for half-length PCIe risers

Note: The illustrations show how to install a crossbar into a chassis with half-length PCIe risers. The installation procedure is similar for full-length PCIe risers.

Procedure

Step 1. Install the crossbar.

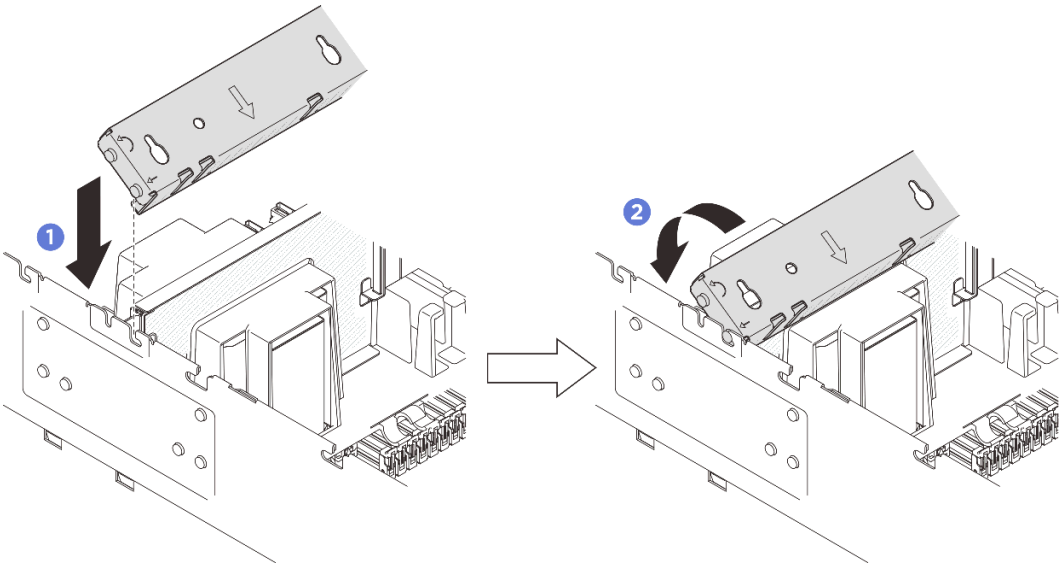

Figure 58. Installing crossbar

a. 1 Align the rear guide pins on the crossbar and install it into the openings on the sides of the chassis.

b. 2 Rotate the crossbar towards the front of the server to secure it in place.

Step 2. Secure PCIe riser 1 to the crossbar.

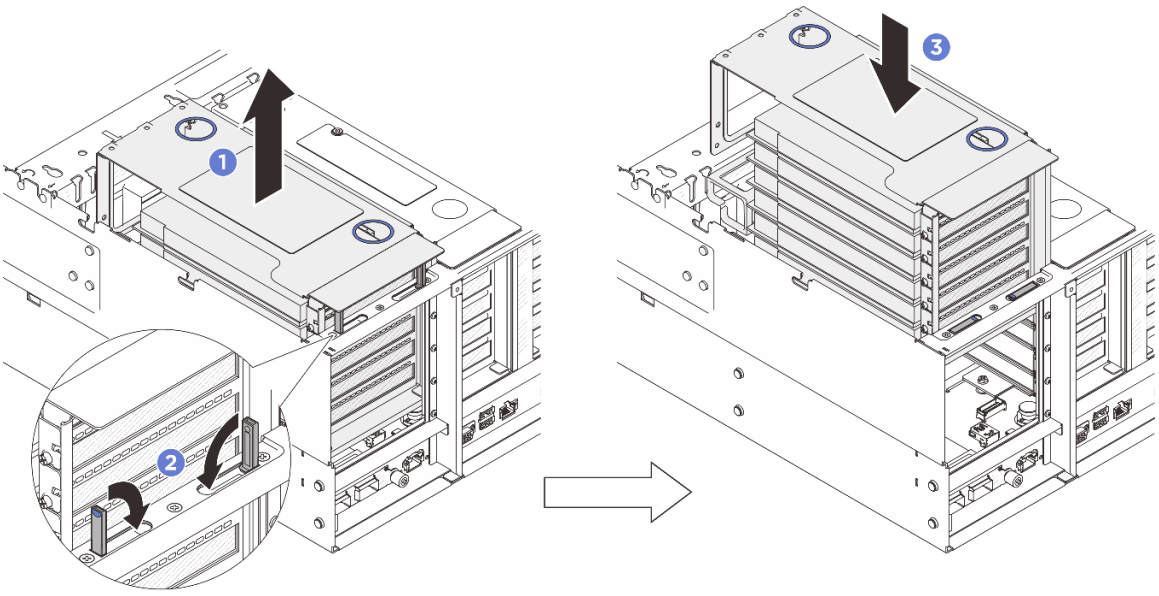

Figure 59. Securing PCIe riser

a. 1 Slightly lift the PCIe riser.

b. 2 Close the kickstand(s).

c. 3 Push the PCIe riser into the chassis until it is fully seated.

Step 3. Repeat Step 2 on page 130 to secure the other two PCIe risers.

Step 4. Connect all external cables to the PCIe adapters.

After you finish

1. Reinstall the front top cover. See “Install the front top cover” on page 375.
2. Reinstall the rear top cover. See “Install the rear top cover” on page 373.
3. Complete the parts replacement. See “Complete the parts replacement” on page 382.

Demo video

Watch the procedure on YouTube

E3.S hot-swap drive replacement

Follow the instructions in this section to remove and install an E3.S hot-swap drive.

Remove an E3.S hot-swap drive

Follow the instructions in this section to remove an E3.S hot-swap drive.

About this task

Attention:

- Read “Installation Guidelines” on page 45 and “Safety inspection checklist” on page 46 to ensure that you work safely.
- To make sure that there is adequate system cooling, do not operate the server for more than two minutes without either a drive or a filler installed in each bay.
- If one or more EDSFF drives are to be removed, it is recommended to disable them beforehand via the operating system.
- Before you remove or make changes to drives, drive controllers (including controllers that are integrated on the system board), drive backplanes or drive cables, back up all important data that is stored on drives.
- Before you remove any component of a RAID array (drive, RAID card, etc.), back up all RAID configuration information.

Note: Make sure you have the drive bay fillers available if some drive bays will be left empty after the removal.

Procedure

Step 1. Remove the E3.S bezel.

a. 1 Press the button on the E3.S bezel to disengage the cover.

b. 2 Remove the E3.S bezel from the server.

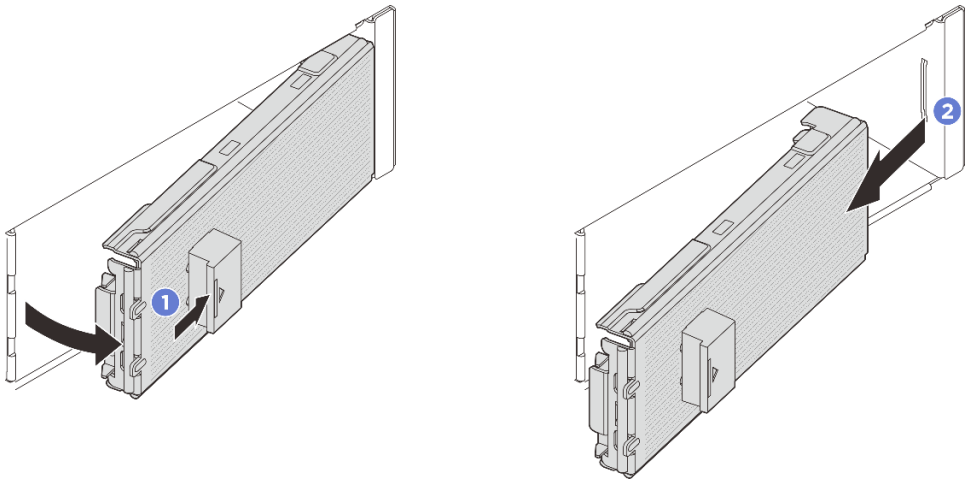

Figure 60. Removing the E3.S bezel

Step 2. Remove an E3.S hot-swap drive.

a. ❶ Slide the release latch to unlock the drive handle.

b. ❷ Rotate the drive handle to the open position.

c. ❸ Grasp the handle and slide the drive out of the drive bay.

Note: Install a bay filler or replacement unit as soon as possible. See “Install an E3.S hot-swap drive” on page 133.

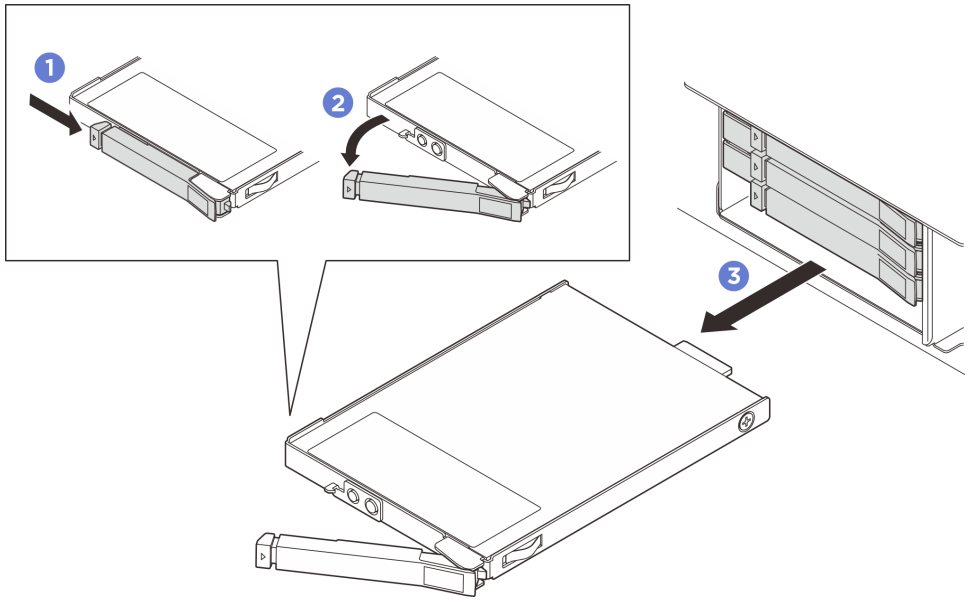

Figure 61. Removing an E3.S hot-swap drive

After you finish

If you are instructed to return the component or optional device, follow all packaging instructions, and use any packaging materials for shipping that are supplied to you.

Demo video

Watch the procedure on YouTube

Install an E3.S hot-swap drive

Follow the instructions in this section to install an E3.S hot-swap drive.

About this task

Attention:
- Read “Installation Guidelines” on page 45 and “Safety inspection checklist” on page 46 to ensure that you work safely.
- Touch the static-protective package that contains the drive to any unpainted metal surface on the solution; then, remove the drive from the package and place it on a static-protective surface.
- Make sure you save the data on your drive, especially if it is part of a RAID array, before you remove it from the server.
- To avoid damage to the drive connectors, make sure that the server top cover is in place and fully closed whenever you install or remove a drive.
- To make sure that there is adequate system cooling, do not operate the server for more than two minutes without either a drive or a drive bay filler installed in each bay.
- Before you make changes to drives, drive controllers (including controllers that are integrated on the system board), drive backplanes, or drive cables, back up all important data that is stored on drives.
- Before you remove any component of a RAID array (drive, RAID card, etc.), back up all RAID configuration information.

The following notes describe the type of drives that the server supports and other information that you must consider when you install a drive. For a list of supported drives, see https://serverproven.lenovo.com.
- Locate the documentation that comes with the drive and follow those instructions in addition to the instructions in this chapter.
- The electromagnetic interference (EMI) integrity and cooling of the solution are protected by having all bays and PCI and PCIe slots covered or occupied. When you install a drive, PCI, or PCIe adapter, save the EMC shield and filler panel from the bay or PCI or PCIe adapter slot cover in the event that you later remove the device.
- For a complete list of supported optional devices for the server, see https://serverproven.lenovo.com.
- The drive bays are numbered to indicate the installation order (starting from number “0”). See “Front view” on page 19 for the drive bay numbering.

Firmware and driver download: You might need to update the firmware or driver after replacing a component.

- Go to https://datacentersupport.lenovo.com/products/servers/thinksystem/sr860v4/7djn/downloads/driver-list to see the latest firmware and driver updates for your server.
- Go to “Update the firmware” on page 386 for more information on firmware updating tools.

Procedure

Step 1. If the E3.S bezel is installed, remove the E3.S bezel.

a. ❶ Press the button on the E3.S bezel to disengage the cover.

b. ❷ Remove the E3.S bezel from the server.

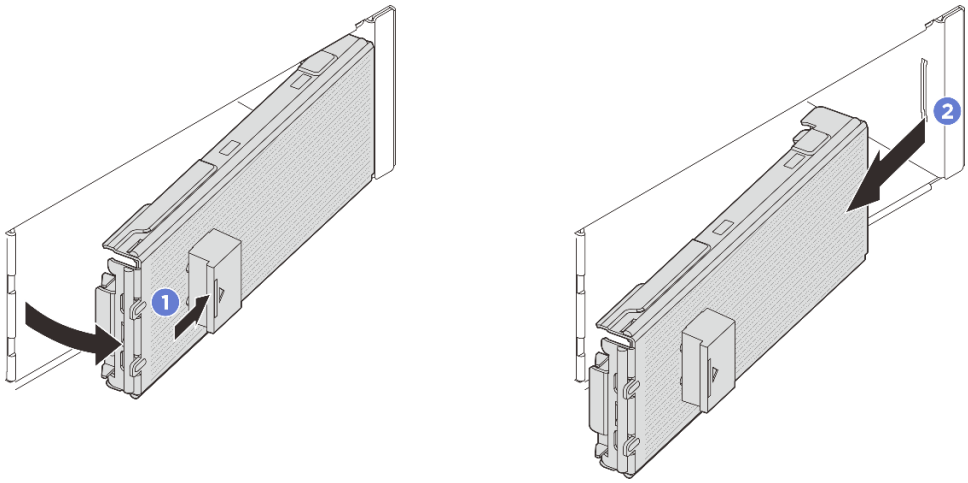

Figure 62. Removing the E3.S bezel

Step 2. If a bay filler is installed in the bay, remove the bay filler. Pull the release lever on the filler and slide it out of the server.

a. ❶ Pinch the release tabs on the filler.

b. ❷ Slide the filler out of the bay.

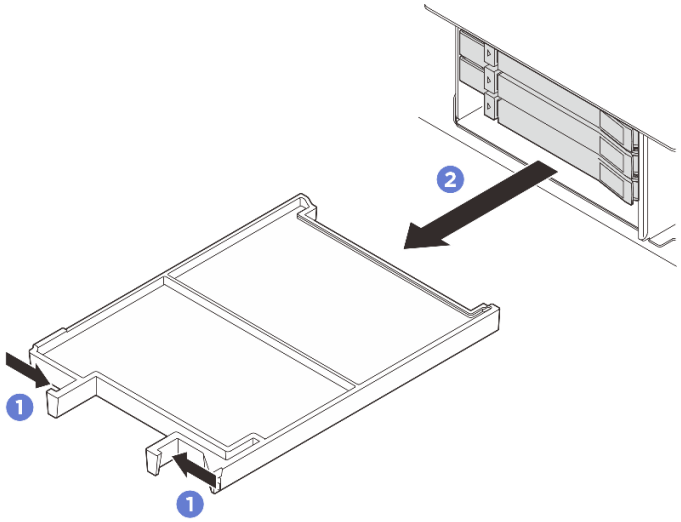

Figure 63. Removing a bay filler

Step 3. Install the E3.S hot-swap drive.

a. ❶ Make sure that the drive handle is in the open position. Then, align the drive with the guide rails in the bay and gently push the drive into the bay until the drive stops.

b. ❷ Rotate the drive handle to the fully closed position until the handle latch clicks.

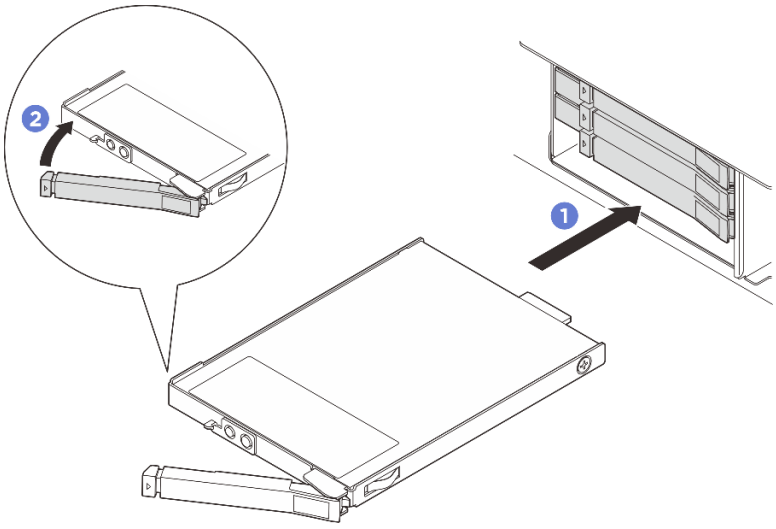

Figure 64. Installing an E3.S hot-swap drive

Step 4. If there are additional drives to install, do so now; if any of the bays is left empty, fill it with a bay filler.

- To install a bay filler, insert it into the empty bay until it is firmly seated.

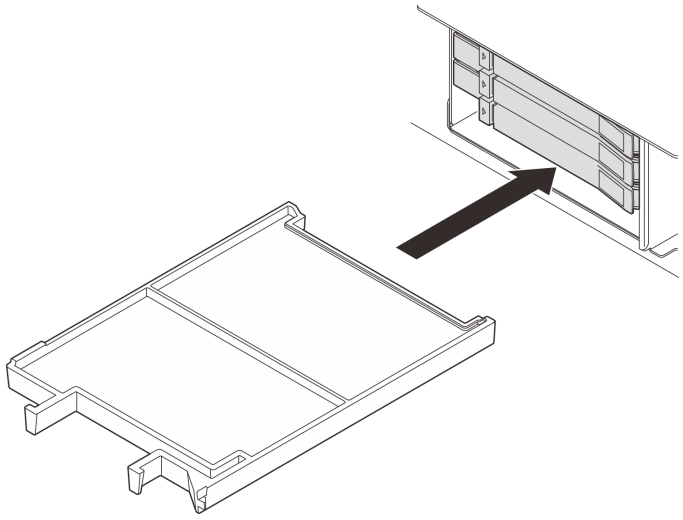

Figure 65. Installing a bay filler

Step 5. Check the drive LEDs to verify that the drive is operating correctly.

- If the yellow drive status LED is lit continuously, the drive is malfunctioning and must be replaced.
- If the green drive activity LED is flashing, the drive is functioning.

Step 6. Depending on the configuration, remove the inner plate of the E3.S bezel if necessary.

Notes:

- When the space to be covered is with E3.S 1T cage installed, the inner plate of E3.S bezel should be removed.

- For proper cooling and airflow, when the space to be covered is without E3.S 1T cage installed, the inner plate of E3.S bezel is required.

a. ① Press the tabs to disengage the inner plate.

b. ② Rotate the inner plate away from the E3.S bezel to remove it.

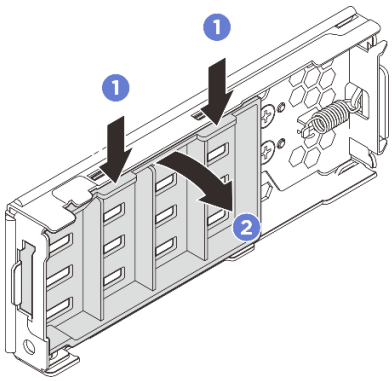

Figure 66. Removing the inner plate

Step 7. Reinstall the E3.S bezel back to the server.

a. ① Insert the E3.S bezel into the slot.

b. ② Rotate the E3.S bezel toward the server until it clicks into place.

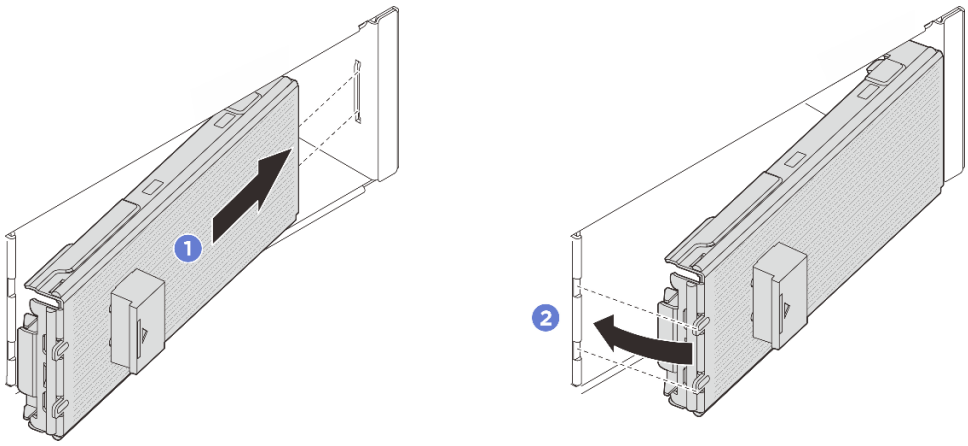

Figure 67. Installing the E3.S bezel

Important: The E3.S bezel is designed for proper EMI integrity of the server. The server models with E3.S drives should always operate with all E3.S bezels installed.

After you finish

If the server is configured for RAID operation through a ThinkSystem RAID adapter, you might have to reconfigure your disk arrays after you install drives. See the ThinkSystem RAID adapter documentation for additional information about RAID operation and complete instructions for using ThinkSystem RAID adapter.

Demo video

Watch the procedure on YouTube

E3.S drive cage and backplane replacement

Follow the instructions in this section to remove and install an E3.S drive cage and an E3.S drive backplane.

Remove an E3.S drive cage and backplane

Follow the instructions in this section to remove an E3.S drive cage and backplane.

About this task

Attention:

- Read "Installation Guidelines" on page 45 and "Safety inspection checklist" on page 46 to ensure that you work safely.
- Power off the server and peripheral devices and disconnect the power cords and all external cables. See "Power off the server" on page 61.
- Prevent exposure to static electricity, which might lead to system halt and loss of data, by keeping static-sensitive components in their static-protective packages until installation, and handling these devices with an electrostatic-discharge wrist strap or other grounding system.

Procedure

Step 1. Remove all E3.S hot-swap drives installed in the cage. See "Remove an E3.S hot-swap drive" on page 131.

Step 2. If the server is installed in a rack, slide the server out on its rack slide rails to gain access to the top covers, or remove the server from the rack. See "Server replacement" on page 67.

Step 3. Remove the front top cover. See "Remove the front top cover" on page 369.

Step 4. If necessary, remove the fans and the fan cage. See "Remove a fan" on page 150 and "Remove the fan cage" on page 152.

Step 5. Disconnect the power and signal cables from the processor board.

Attention: To avoid damaging the system board assembly, make sure to follow the instructions in ***Internal Cable Routing Guide*** when disconnecting cables from the system board assembly.

Step 6. Remove the E3.S 1T cage.

Note: An E3.S bezel without inner plate is used to cover a space with E3.S 1T cage installed. For proper cooling and airflow, make sure to reinstall an E3.S 1T cage and corresponding E3.S bezel before turning on the server. If you use an E3.S bezel without inner plate to cover a space without E3.S 1T cage, server components might be damaged during operation.

a. ❶ Open the latch to disengage the cage.

b. ❷ Slide the cage out of the chassis.

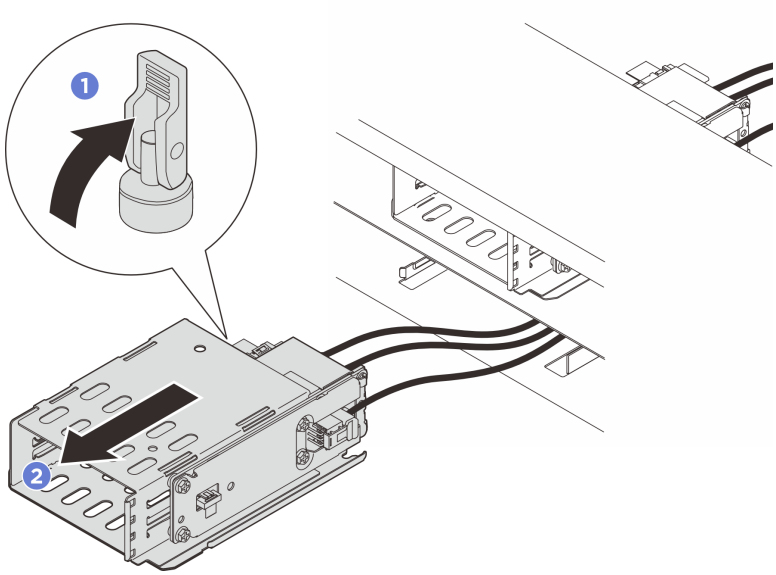

Figure 68. Removing the E3.S 1T cage

Step 7. Disconnect power and signal cables from the backplane.

Step 8. Remove the backplane assembly from the E3.S 1T cage.

a. 1 Loosen the four screws that secure the backplane assembly.

b. 2 Slide the backplane assembly away from the cage.

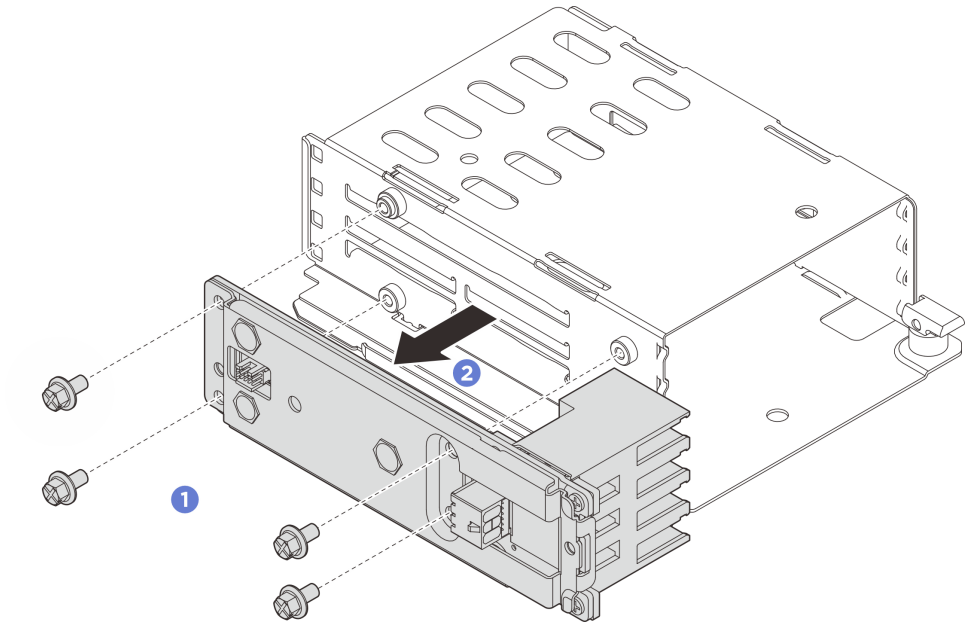

Figure 69. Removing the backplane assembly

After you finish

If you are instructed to return the component or optional device, follow all packaging instructions, and use any packaging materials for shipping that are supplied to you.

Demo video

Watch the procedure on YouTube

Install an E3.S drive cage and backplane

Follow the instructions in this section to install an E3.S drive cage and backplane.

About this task

Attention:

- Read “Installation Guidelines” on page 45 and “Safety inspection checklist” on page 46 to ensure that you work safely.
- Power off the server and peripheral devices and disconnect the power cords and all external cables. See “Power off the server” on page 61.
- Prevent exposure to static electricity, which might lead to system halt and loss of data, by keeping static-sensitive components in their static-protective packages until installation, and handling these devices with an electrostatic-discharge wrist strap or other grounding system.
- Follow the backplane installation rules and order in “Drive backplane installation rules and order” on page 56.

Procedure

Step 1. Install the backplane assembly to the E3.S 1T cage.

a. ❶ Install the backplane assembly to the cage.

b. ❷ Fasten four screws to secure the backplane assembly.

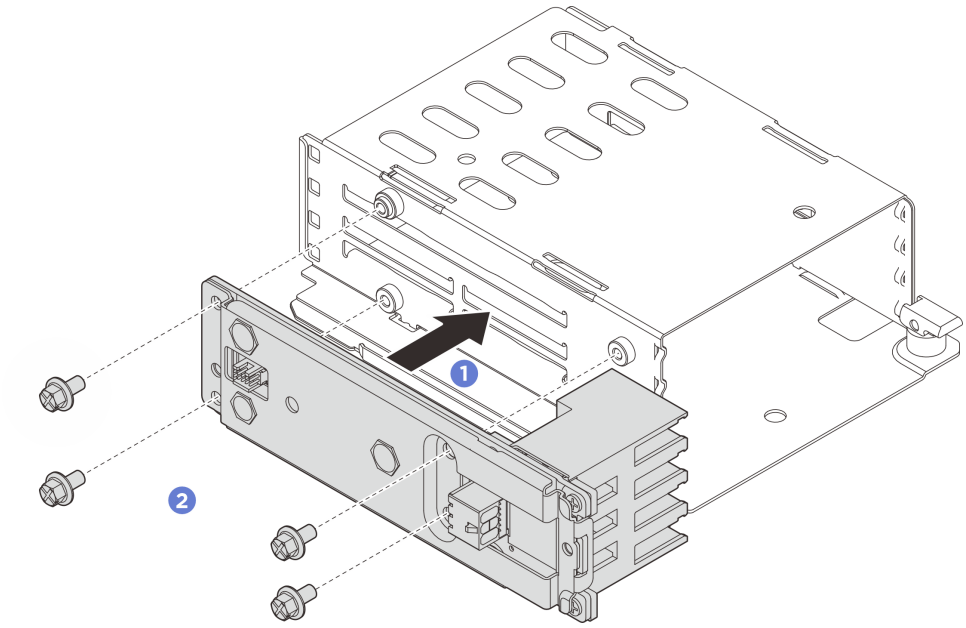

Figure 70. Installing the backplane assembly

Step 2. Connect power and signal cables to the backplane.

Step 3. Install the E3.S 1T cage.

a. ❶ Make sure that the latch is in the open position.

b. ❷ Slide the cage into the chassis until the guide pin on the chassis is seated into place.

c. ❸ Press the latch down to secure the cage.

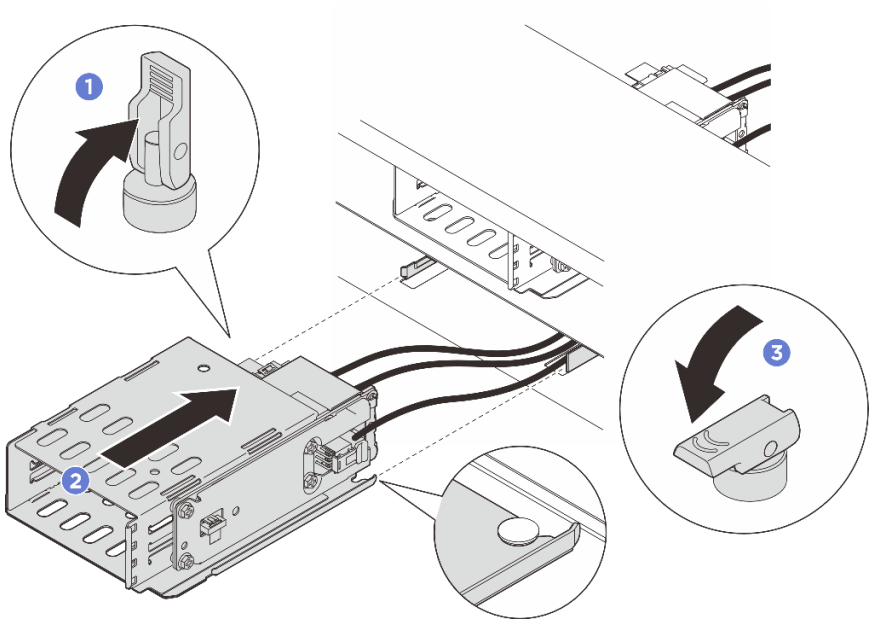

Figure 71. Installing the E3.S 1T cage

Step 4. Connect the power and signal cables to the processor board. See ***Internal Cable Routing Guide***.

After you finish

1. Reinstall the drives or drive fillers and E3.S bezel. See "Install an E3.S hot-swap drive" on page 133.
2. Reinstall the fans and the fan cage assembly if you have removed them. See "Install a fan" on page 155 and "Install the fan cage" on page 154.
3. Reinstall the front top cover. See "Install the front top cover" on page 375.
4. Complete the parts replacement. See "Complete the parts replacement" on page 382.

Demo video

Watch the procedure on YouTube

E3.S non-hot-swap CMM replacement

Follow the instructions in this section to remove and install an E3.S non-hot-swap CXL memory module (CMM).

Remove an E3.S non-hot-swap CMM

Follow the instructions in this section to remove an E3.S non-hot-swap CXL memory module (CMM).

About this task

Attention:

- Read "Installation Guidelines" on page 45 and "Safety inspection checklist" on page 46 to ensure that you work safely.
- Power off the server and peripheral devices and disconnect the power cords and all external cables. See "Power off the server" on page 61.

- Prevent exposure to static electricity, which might lead to system halt and loss of data, by keeping static-sensitive components in their static-protective packages until installation, and handling these devices with an electrostatic-discharge wrist strap or other grounding system.

Note: Make sure you have the CMM bay fillers available if some CMM bays will be left empty after the removal.

Procedure

Step 1. Remove the E3.S bezel.

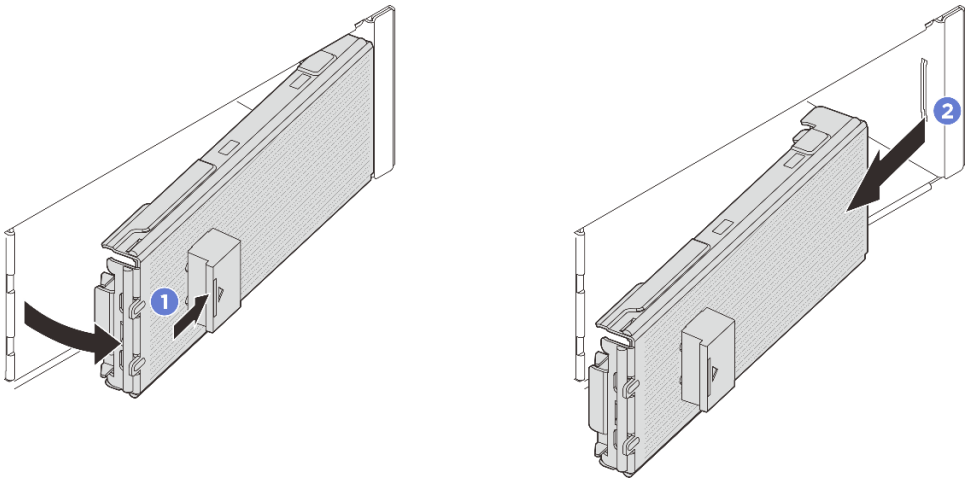

Figure 72. Removing the E3.S bezel

a. 1 Press the button on the E3.S bezel to disengage the bezel.

b. 2 Remove the E3.S bezel from the server.

Step 2. Check whether the health LED of the CMM is off, which means removal is permitted. See "E3.S CMM LEDs" on page 398.

Step 3. Remove the CMM.

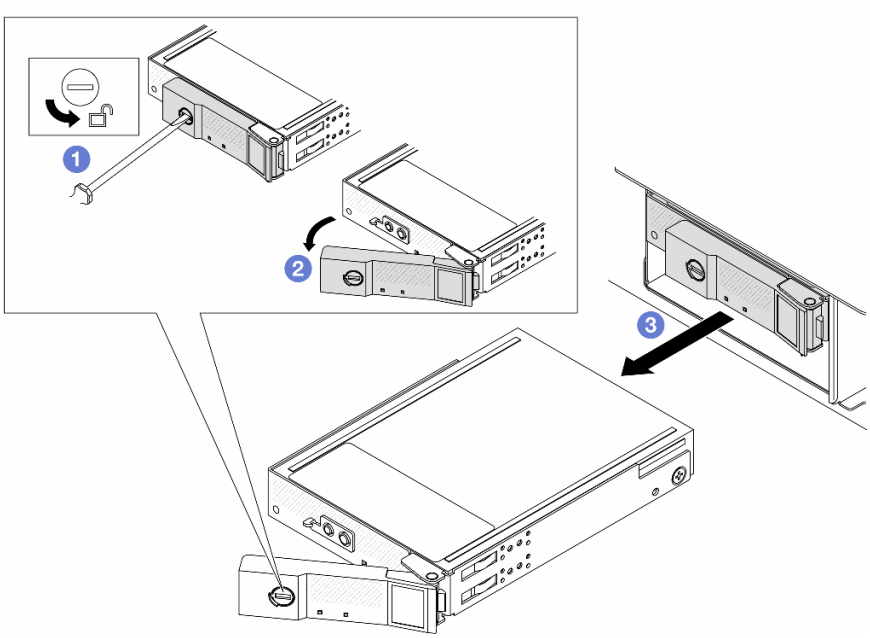

Figure 73. Removing the CMM

a. 1 Rotate the release latch to the open position by using a 3 mm flat-head screwdriver to unlock the handle.

b. 2 Rotate the handle to the open position.

c. 3 Grasp the handle and slide the CMM out of the bay.

Note: Install a bay filler (see the figure below) or a replacement unit (see “Install an E3.S non-hot-swap CMM” on page 143) as soon as possible.

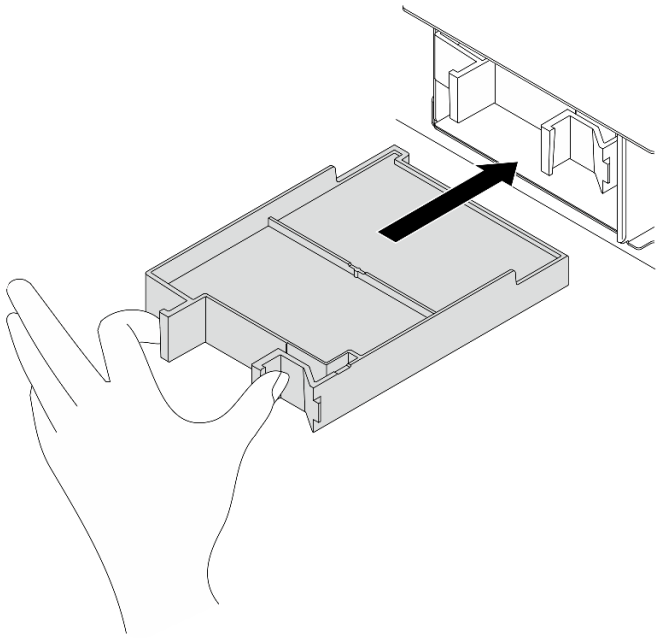

Figure 74. Installing a CMM bay filler

After you finish

If you are instructed to return the component or optional device, follow all packaging instructions, and use any packaging materials for shipping that are supplied to you.

Demo video

Watch the procedure on YouTube

Install an E3.S non-hot-swap CMM

Follow the instructions in this section to install an E3.S non-hot-swap CXL memory module (CMM).

About this task

Attention:

- Read “Installation Guidelines” on page 45 and “Safety inspection checklist” on page 46 to ensure that you work safely.
- Power off the server and peripheral devices and disconnect the power cords and all external cables. See “Power off the server” on page 61.
- Prevent exposure to static electricity, which might lead to system halt and loss of data, by keeping static-sensitive components in their static-protective packages until installation, and handling these devices with an electrostatic-discharge wrist strap or other grounding system.

Procedure

Step 1. If the E3.S bezel is installed, remove the E3.S bezel.

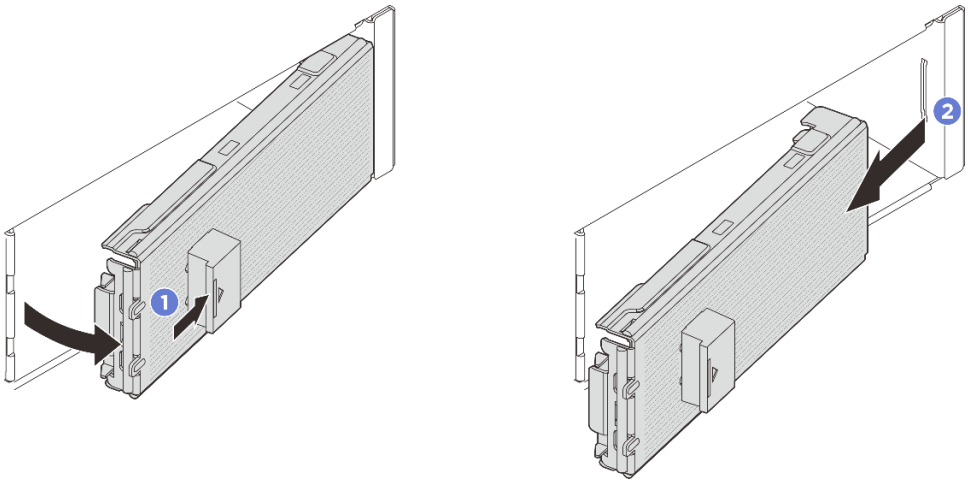

Figure 75. Removing the E3.S bezel

a. 1 Press the button on the E3.S bezel to disengage the cover.

b. 2 Remove the E3.S bezel from the server.

Step 2. If a bay filler is installed in the bay, pull the release lever on the filler and slide it out of the server.

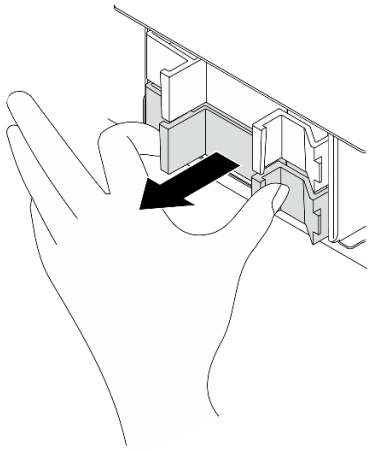

Figure 76. Removing a bay filler

Step 3. Install the E3.S CMM.

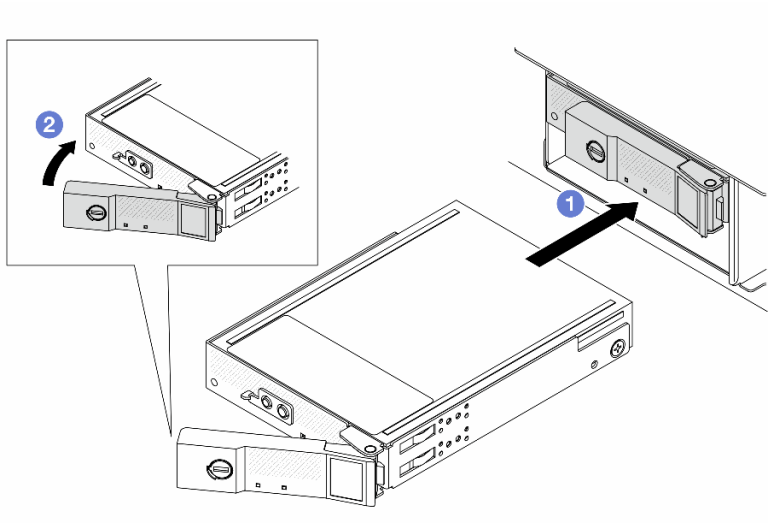

Figure 77. Installing an E3.S CMM

a. 1 Make sure that the handle is in the open position. Then, align the CMM with the guide rails in the bay and gently push the CMM into the bay until the CMM stops.

b. 2 Rotate the handle to the fully closed position until the handle latch clicks.

Step 4. If there are additional CMMs to install, do so now; if any of the bays is left empty, fill it with a bay filler.

Figure 78. Installing a CMM bay filler

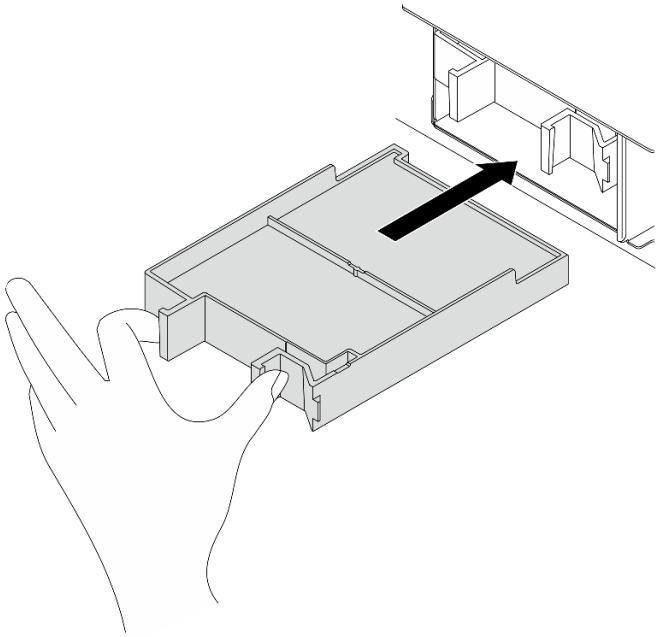

Step 5. Check the CMM LEDs to verify that the drive is operating correctly. See “E3.S CMM LEDs” on page 398.

- If the amber fault LED is lit continuously, the CMM is malfunctioning and must be replaced.
- If the white health LED is flashing, the CMM is functioning.

Step 6. Depending on the configuration, remove the inner plate of the E3.S bezel if necessary.

Notes:

- When the space to be covered is with E3.S 2T cage installed, the inner plate of the E3.S bezel should be removed.
- For proper cooling and airflow, when the space to be covered is without E3.S 2T cage installed, the inner plate of the E3.S bezel is required.

a. ❶ Press the tabs to disengage the inner plate.

b. ❷ Rotate the inner plate away from the bezel to remove it.

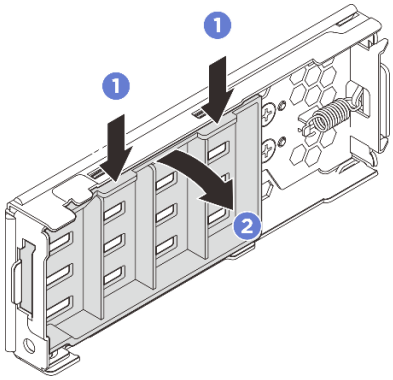

Figure 79. Removing the inner plate

Step 7. Reinstall the E3.S bezel back to the server.

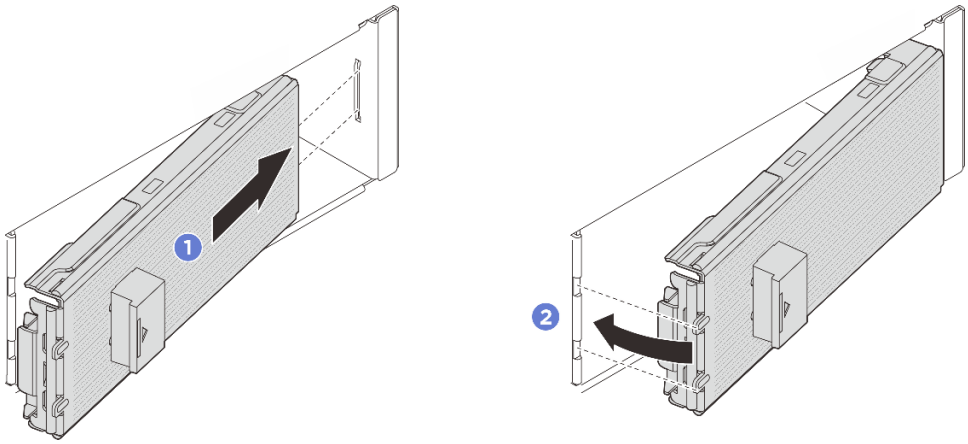

Figure 80. Installing the E3.S bezel

a. 1 Insert the bezel into the slot.

b. 2 Rotate the bezel toward the server until it clicks into place.

Important: The E3.S bezel is designed for proper EMI integrity of the server. The server models with E3.S chassis should always operate with the E3.S bezel installed for every E3.S slot.

After you finish

Complete the parts replacement. See "Complete the parts replacement" on page 382.

Demo video

Watch the procedure on YouTube

E3.S CMM cage and backplane replacement

Follow the instructions in this section to remove and install an E3.S CXL memory module (CMM) cage and backplane.

Remove an E3.S CMM cage and backplane

Follow the instructions in this section to remove an E3.S CMM cage and backplane.

About this task

Attention:

- Read "Installation Guidelines" on page 45 and "Safety inspection checklist" on page 46 to ensure that you work safely.
- Power off the server and peripheral devices and disconnect the power cords and all external cables. See "Power off the server" on page 61.
- Prevent exposure to static electricity, which might lead to system halt and loss of data, by keeping static-sensitive components in their static-protective packages until installation, and handling these devices with an electrostatic-discharge wrist strap or other grounding system.

Procedure

Step 1. If the server is installed in a rack, slide the server out on its rack slide rails to gain access to the top covers, or remove the server from the rack. See "Server replacement" on page 67.

Step 2. Remove all E3.S CMMs installed in the cage. See “Remove an E3.S non-hot-swap CMM” on page 140.

Step 3. Remove the front top cover. See “Remove the front top cover” on page 369.

Step 4. Remove the fans and the fan cage. See “Remove a fan” on page 150 and “Remove the fan cage” on page 152.

Step 5. Disconnect the power and signal cables from the processor board.

Attention: To avoid damaging the system board assembly, make sure to follow the instructions in ***Internal Cable Routing Guide*** when disconnecting cables from the system board assembly.

Step 6. Remove the E3.S 2T cage.

Note: An E3.S bezel without inner plate is used to cover a space with E3.S 2T cage installed. For proper cooling and airflow, make sure to reinstall an E3.S 2T cage and corresponding E3.S bezel before turning on the server. If you use an E3.S bezel without inner plate to cover a space without E3.S 2T cage, server components might be damaged during operation.

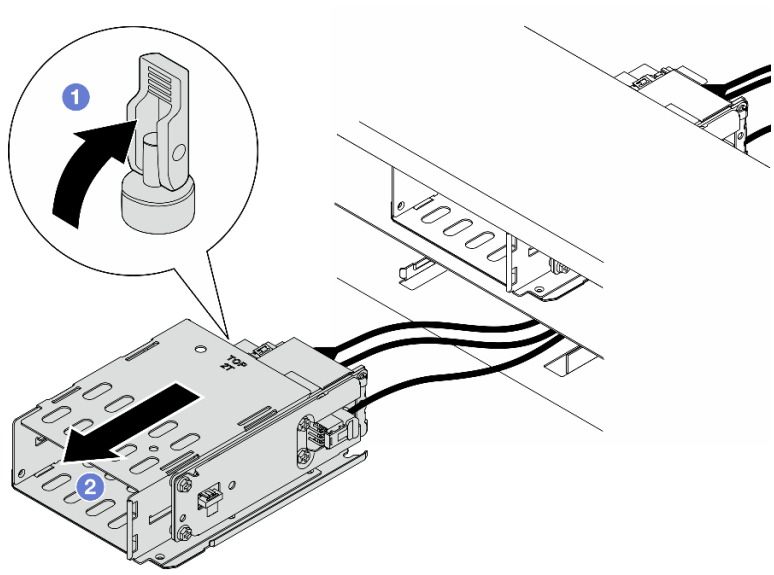

Figure 81. Removing the E3.S 2T cage

a. 1 Open the latch to disengage the cage.

b. 2 Slide the cage out of the chassis.

Step 7. Disconnect the power cable from the backplane.

Step 8. Remove the backplane from the cage.

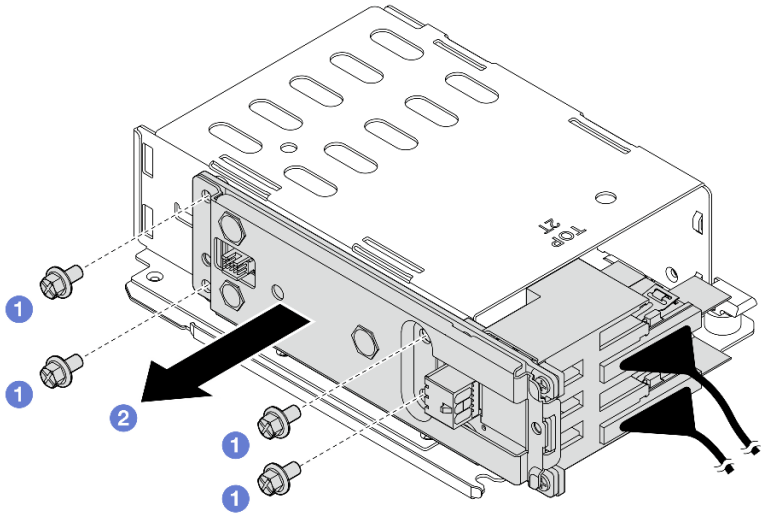

Figure 82. Removing the backplane

a. 1 Loosen the four screws that secure the backplane.
b. 2 Slide the backplane away from the cage.

Step 9. Disconnect the signal cables from the backplane.

After you finish

If you are instructed to return the component or optional device, follow all packaging instructions, and use any packaging materials for shipping that are supplied to you.

Demo video

Watch the procedure on YouTube

Install an E3.S CMM cage and backplane

Follow the instructions in this section to install an E3.S CMM cage and backplane.

About this task

Attention:
- Read “Installation Guidelines” on page 45 and “Safety inspection checklist” on page 46 to ensure that you work safely.
- Power off the server and peripheral devices and disconnect the power cords and all external cables. See “Power off the server” on page 61.
- Prevent exposure to static electricity, which might lead to system halt and loss of data, by keeping static-sensitive components in their static-protective packages until installation, and handling these devices with an electrostatic-discharge wrist strap or other grounding system.
- Follow the backplane installation rules and order in “Drive backplane installation rules and order” on page 56.

Procedure

Step 1. Connect the signal cables to the backplane.

Step 2. Install the backplane to the E3.S 2T cage.

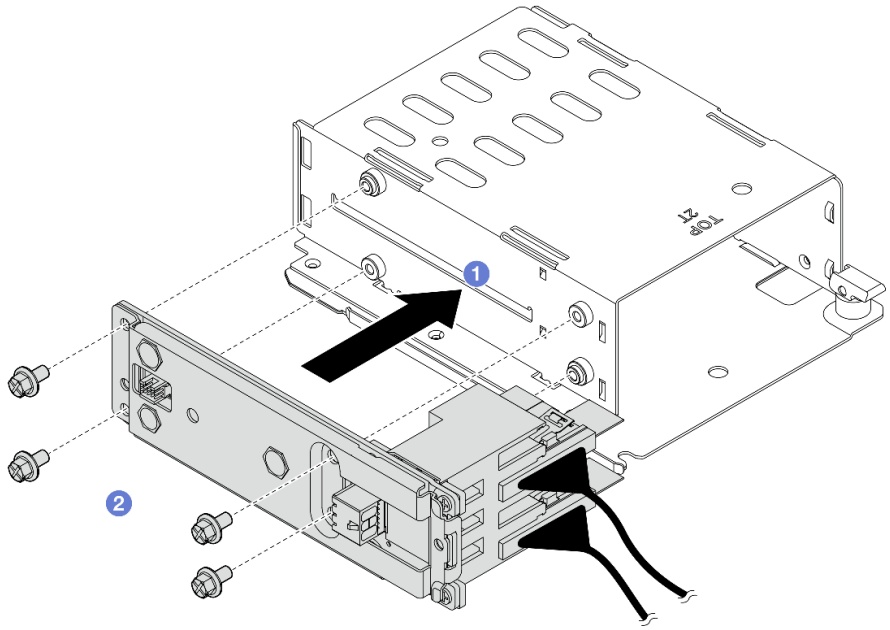

Figure 83. Installing the backplane

a. ❶ Install the backplane to the cage.

b. ❷ Fasten four screws to secure the backplane.

Step 3. Connect the power cable to the backplane.

Step 4. Install the E3.S 2T cage.

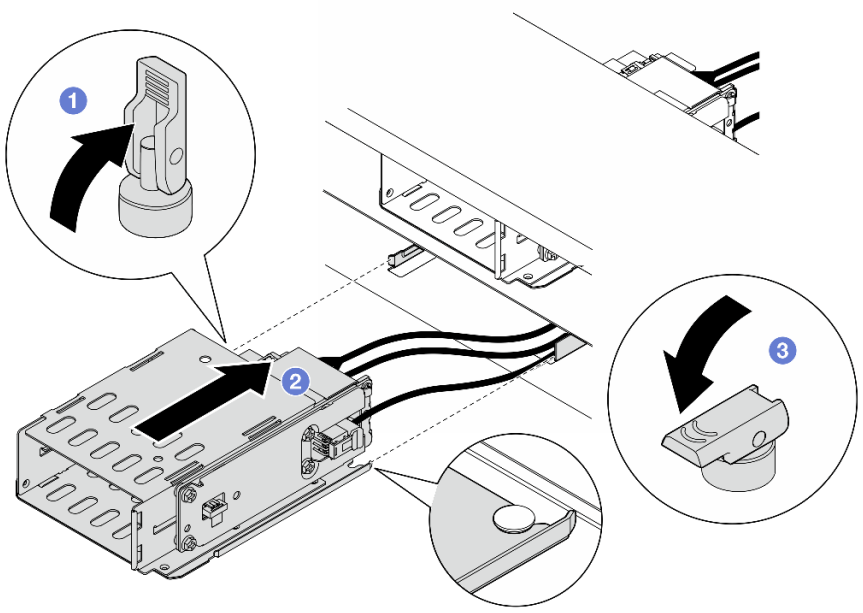

Figure 84. Installing the E3.S 2T cage

a. Make sure that the latch is in the open position.

b. Slide the cage into the chassis until the guide pin on the chassis is seated into place.

c. Press the latch down to secure the cage.

Step 5. Connect the power and signal cables to the system board assembly. See ***Internal Cable Routing Guide***.

After you finish

1. Reinstall the CMM or CMM fillers and E3.S bezel. See "Install an E3.S non-hot-swap CMM" on page 143.
2. Reinstall the fan cage. See "Install the fan cage" on page 154.
3. Reinstall the fans. See "Install a fan" on page 155.
4. Reinstall the front top cover. See "Install the front top cover" on page 375.
5. Complete the parts replacement. See "Complete the parts replacement" on page 382.

Demo video

Watch the procedure on YouTube

Fan and fan cage replacement

Follow instructions in this section to remove or install a fan and the fan cage.

Remove a fan

Follow instructions in this section to remove a fan.

About this task

S002

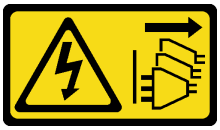

CAUTION:
The power-control button on the device and the power switch on the power supply do not turn off the electrical current supplied to the device. The device also might have more than one power cord. To remove all electrical current from the device, ensure that all power cords are disconnected from the power source.

S014



CAUTION:
Hazardous voltage, current, and energy levels might be present. Only a qualified service technician is authorized to remove the covers where the label is attached.

S017



CAUTION:
Hazardous moving fan blades nearby. Keep fingers and other body parts away.

S033



CAUTION:
Hazardous energy present. Voltages with hazardous energy might cause heating when shorted with metal, which might result in spattered metal, burns, or both.

Attention:

- Read “Installation Guidelines” on page 45 and “Safety inspection checklist” on page 46 to ensure that you work safely.
- Power off the server and peripheral devices and disconnect the power cords and all external cables. See “Power off the server” on page 61.

Procedure

Step 1. If the server is installed in a rack, slide the server out on its rack slide rails to gain access to the top covers, or remove the server from the rack. See “Server replacement” on page 67.

Step 2. Remove the front top cover. See “Remove the front top cover” on page 369.

Step 3. Remove the fan.

a. ❶ Pinch and hold the orange touch points on the top of the fan.

b. ❷ Lift the fan out of the chassis.

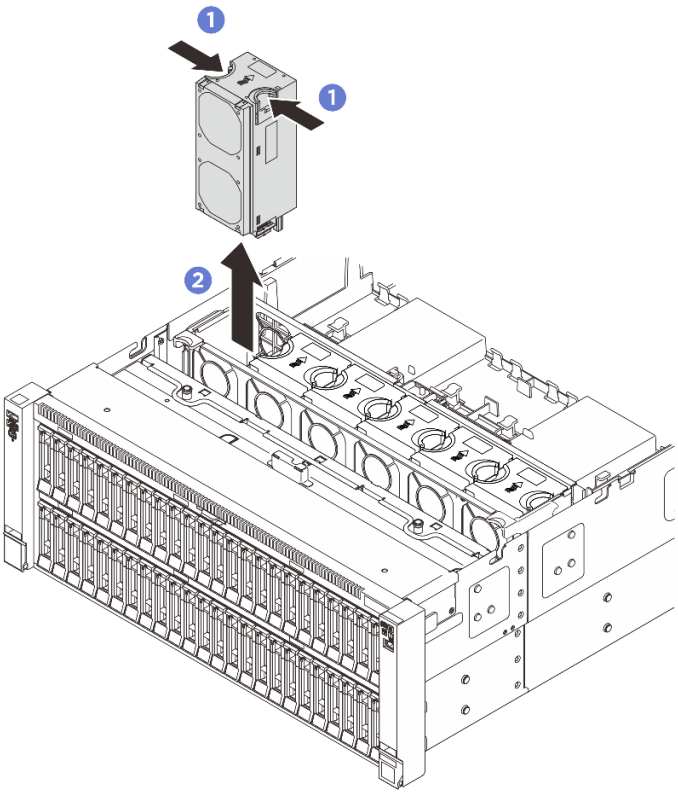

Figure 85. Fan removal

After you finish

If you are instructed to return the component or optional device, follow all packaging instructions, and use any packaging materials for shipping that are supplied to you.

Demo video

Watch the procedure on YouTube

Remove the fan cage

Follow instructions in this section to remove the fan cage.

About this task

S002

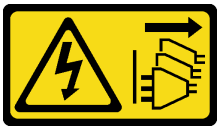

CAUTION:
The power-control button on the device and the power switch on the power supply do not turn off the electrical current supplied to the device. The device also might have more than one power cord. To remove all electrical current from the device, ensure that all power cords are disconnected from the power source.

S017



CAUTION:
Hazardous moving fan blades nearby. Keep fingers and other body parts away.

Attention:

- Read “Installation Guidelines” on page 45 and “Safety inspection checklist” on page 46 to ensure that you work safely.
- Power off the server and peripheral devices and disconnect the power cords and all external cables. See “Power off the server” on page 61.

Procedure

Step 1. If the server is installed in a rack, slide the server out on its rack slide rails to gain access to the top covers, or remove the server from the rack. See “Server replacement” on page 67.

Step 2. Remove the front top cover. See “Remove the front top cover” on page 369.

Step 3. Remove all of the fans. See “Remove a fan” on page 150.

Step 4. Remove the fan cage.

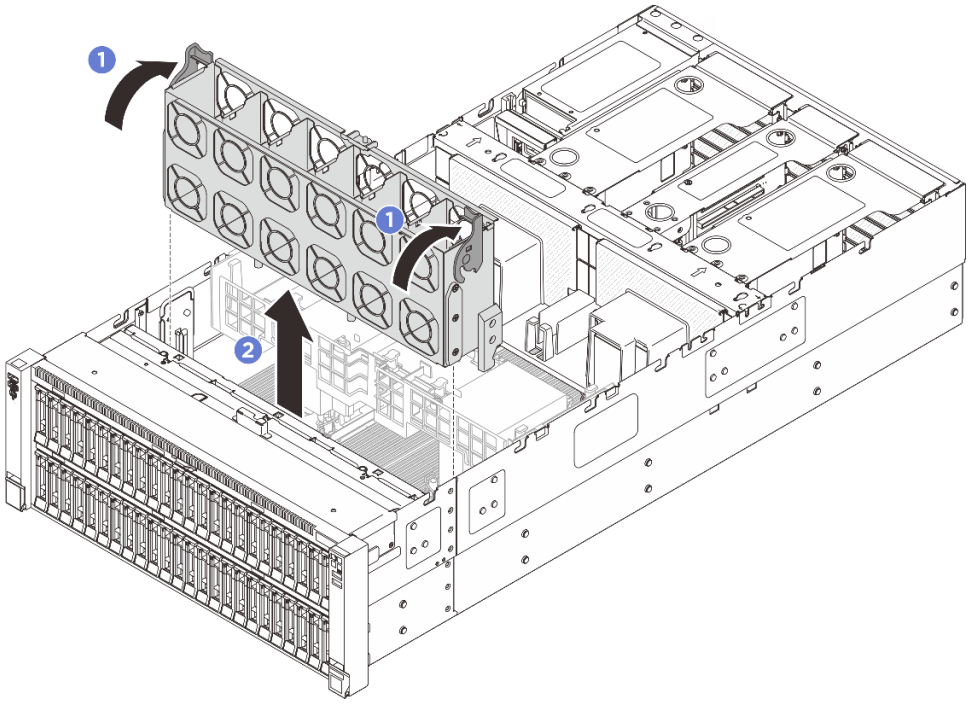

Figure 86. Fan cage removal

a. 1 Rotate the two release latches on the fan cage up to disengage it from the chassis.

b. 2 Hold the handles, and lift the fan cage out of the chassis.

After you finish

If you are instructed to return the component or optional device, follow all packaging instructions, and use any packaging materials for shipping that are supplied to you.

Demo video

Watch the procedure on YouTube

Install the fan cage

Follow instructions in this section to install the fan cage.

About this task

S002

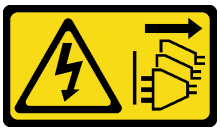

CAUTION:
The power-control button on the device and the power switch on the power supply do not turn off the electrical current supplied to the device. The device also might have more than one power cord. To remove all electrical current from the device, ensure that all power cords are disconnected from the power source.

S017



CAUTION:
Hazardous moving fan blades nearby. Keep fingers and other body parts away.

Attention:

- Read “Installation Guidelines” on page 45 and “Safety inspection checklist” on page 46 to ensure that you work safely.
- Prevent exposure to static electricity, which might lead to system halt and loss of data, by keeping static-sensitive components in their static-protective packages until installation, and handling these devices with an electrostatic-discharge wrist strap or other grounding system.

Procedure

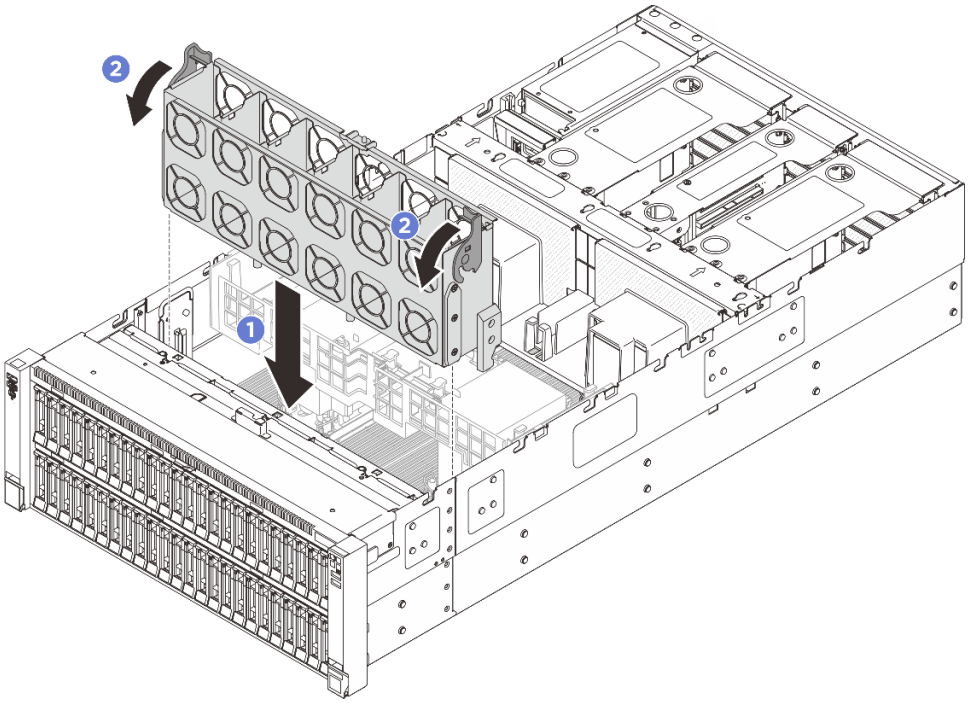

Figure 87. Fan cage installation

Step 1. Align the guide slots on the fan cage with the guide pins on the chassis, and lower it into the chassis.

Step 2. Rotate the two release latches down until they stop.

After you finish

1. Reinstall the fans. See "Install a fan" on page 155.
2. Reinstall the front top cover. See "Install the front top cover" on page 375.
3. Complete the parts replacement. See "Complete the parts replacement" on page 382.

Demo video

Watch the procedure on YouTube

Install a fan

Follow instructions in this section to install a fan.

About this task

S002



CAUTION:

The power-control button on the device and the power switch on the power supply do not turn off the electrical current supplied to the device. The device also might have more than one power cord. To remove all electrical current from the device, ensure that all power cords are disconnected from the power source.

S014



CAUTION:
Hazardous voltage, current, and energy levels might be present. Only a qualified service technician is authorized to remove the covers where the label is attached.

S017



CAUTION:
Hazardous moving fan blades nearby. Keep fingers and other body parts away.

S033



CAUTION:
Hazardous energy present. Voltages with hazardous energy might cause heating when shorted with metal, which might result in spattered metal, burns, or both.

Attention:

- Read “Installation Guidelines” on page 45 and “Safety inspection checklist” on page 46 to ensure that you work safely.
- Do not mix single rotor fan and dual rotor fan in the same unit of server.
- Prevent exposure to static electricity, which might lead to system halt and loss of data, by keeping static-sensitive components in their static-protective packages until installation, and handling these devices with an electrostatic-discharge wrist strap or other grounding system.

Procedure

Step 1. Make sure the fan cage is installed in the chassis. See “Install the fan cage” on page 154.

Step 2. Align the fan to the fan slot in the fan cage; then, insert the fan into the fan cage and press it until it clicks into place.

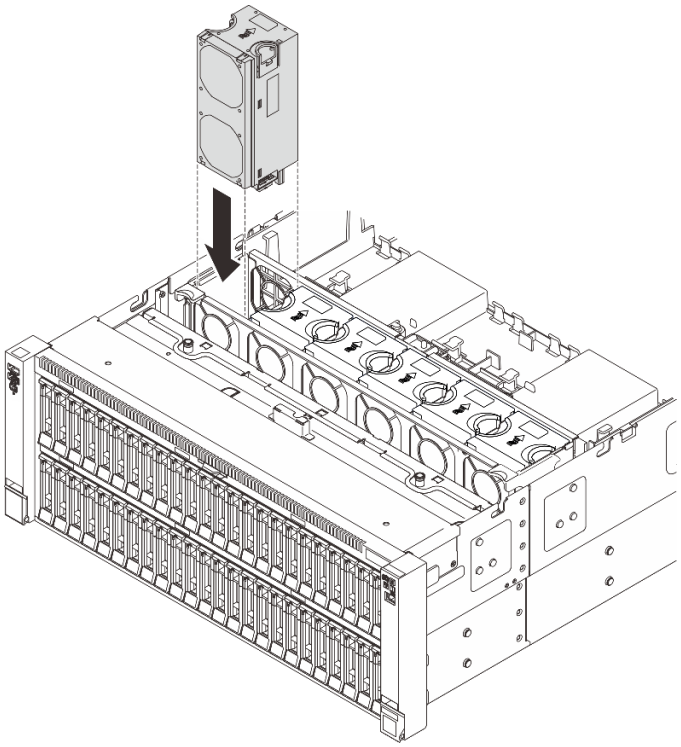

Figure 88. Fan installation

After you finish

Complete the parts replacement. See “Complete the parts replacement” on page 382.

Demo video

Watch the procedure on YouTube

Flash power module replacement

Follow instructions in this section to remove and install a RAID flash power module (also called supercap).

Remove a flash power module

Follow the instructions in this section to remove a flash power module.

About this task

S002

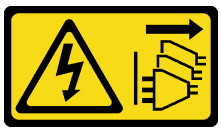

CAUTION:
The power-control button on the device and the power switch on the power supply do not turn off the electrical current supplied to the device. The device also might have more than one power cord. To

remove all electrical current from the device, ensure that all power cords are disconnected from the power source.

Attention:

- Read “Installation Guidelines” on page 45 and “Safety inspection checklist” on page 46 to ensure that you work safely.
- Power off the server and peripheral devices and disconnect the power cords and all external cables. See “Power off the server” on page 61.
- Prevent exposure to static electricity, which might lead to system halt and loss of data, by keeping static-sensitive components in their static-protective packages until installation, and handling these devices with an electrostatic-discharge wrist strap or other grounding system.

Procedure

Step 1. If the server is installed in a rack, slide the server out on its rack slide rails to gain access to the top covers, or remove the server from the rack. See “Server replacement” on page 67.

Step 2. Remove the front top cover. See “Remove the front top cover” on page 369.

Step 3. Disconnect the cable of the flash power module from the extension cable.

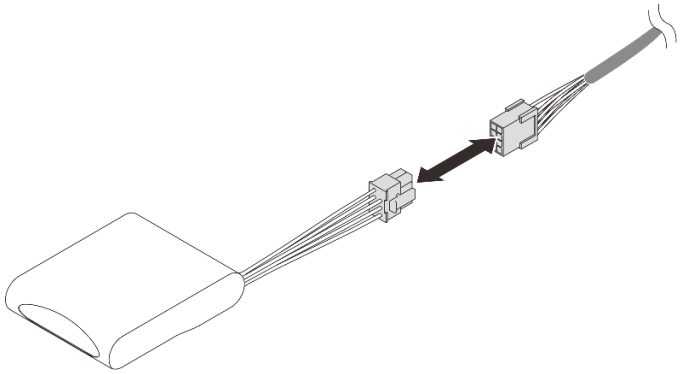

Figure 89. Disconnecting cable from flash power module

Step 4. Remove the flash power module.

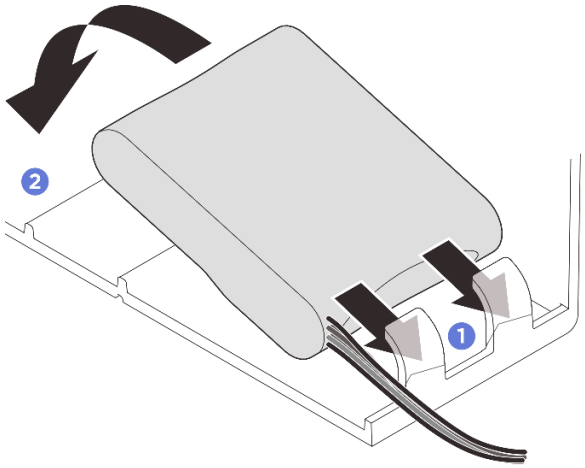

Figure 90. Flash power module removal

a. 1 Gently pivot the retaining clip as shown.

b. 2 Lift the flash power module up and remove it from the holder.

After you finish

1. Install a replacement unit. See “Install a flash power module” on page 159.
2. If you are instructed to return the component or optional device, follow all packaging instructions, and use any packaging materials for shipping that are supplied to you.

Demo video

Watch the procedure on YouTube

Install a flash power module

Follow the instructions in this section to install a RAID flash power module.

About this task

S002



CAUTION:
The power-control button on the device and the power switch on the power supply do not turn off the electrical current supplied to the device. The device also might have more than one power cord. To remove all electrical current from the device, ensure that all power cords are disconnected from the power source.

Attention:

- Read “Installation Guidelines” on page 45 and “Safety inspection checklist” on page 46 to ensure that you work safely.
- Power off the server and peripheral devices and disconnect the power cords and all external cables. See “Power off the server” on page 61.
- Prevent exposure to static electricity, which might lead to system halt and loss of data, by keeping static-sensitive components in their static-protective packages until installation, and handling these devices with an electrostatic-discharge wrist strap or other grounding system.

Procedure

Step 1. Touch the static-protective package that contains the new part to any unpainted surface on the outside of the server; then, take the new part out of the package and place it on a static-protective surface.

Step 2. Locate the flash power module slot on the front air baffle.

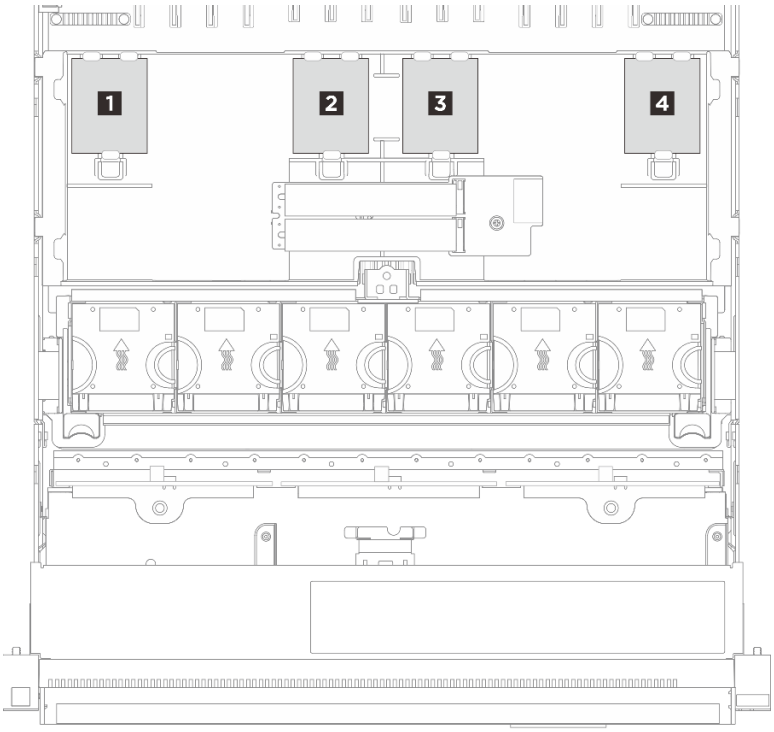

Figure 91. Flash power module location

Step 3. Install the flash power module.

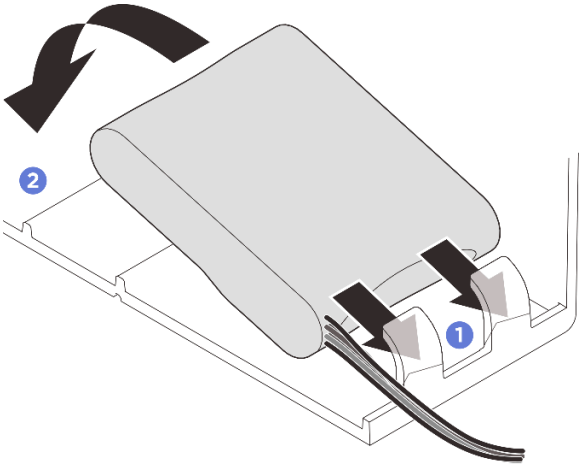

Figure 92. Flash power module installation

a. 1 Note the orientation of the flash power module; then, gently insert the flash power module into the retaining clip at one side as shown.

b. 2 Press the flash power module down on the other side until it snaps into place.

Step 4. Connect the cable of the RAID flash power module to the extension cable.

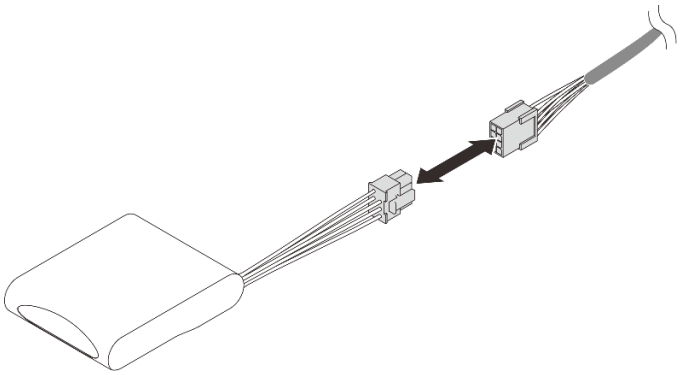

Figure 93. Connecting cable to flash power module

Step 5. Connect the flash power module to a RAID adapter with the extension cable. See ***Internal Cable Routing Guide*** for more information on the internal cable routing.

After you finish

1. Reinstall the front top cover. See "Install the front top cover" on page 375.
2. If you are instructed to return the component or optional device, follow all packaging instructions, and use any packaging materials for shipping that are supplied to you.

Demo video

Watch the procedure on YouTube

GPU adapter replacement

Follow instructions in this section to remove and install a GPU adapter.

Remove a double-wide GPU adapter

Follow the instructions in this section to remove a double-wide GPU adapter.

About this task

S002

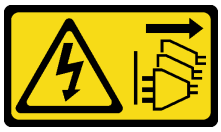

CAUTION:
The power-control button on the device and the power switch on the power supply do not turn off the electrical current supplied to the device. The device also might have more than one power cord. To remove all electrical current from the device, ensure that all power cords are disconnected from the power source.

Attention:

- Read "Installation Guidelines" on page 45 and "Safety inspection checklist" on page 46 to ensure that you work safely.

- Power off the server and peripheral devices and disconnect the power cords and all external cables. See "Power off the server" on page 61.
- Prevent exposure to static electricity, which might lead to system halt and loss of data, by keeping static-sensitive components in their static-protective packages until installation, and handling these devices with an electrostatic-discharge wrist strap or other grounding system.
- Depending on the specific type, your GPU adapter might look slightly different from the illustrations in this section.
- Follow the additional instructions in any documentation that comes with your GPU adapter.

Notes:

- For a list of the supported GPU adapters, see https://serverproven.lenovo.com.
- Ensure that you observe the installation rules and sequence order in "PCIe riser and adapter installation rules and order" on page 58.
- For instructions on how to remove and install a PCIe adapter or single-wide GPU, see "PCIe riser and PCIe adapter replacement" on page 248.

Procedure

Step 1. If the server is installed in a rack, slide the server out on its rack slide rails to gain access to the top covers, or remove the server from the rack. See "Server replacement" on page 67.

Step 2. Remove the front top cover. See "Remove the front top cover" on page 369.

Step 3. Remove the rear top cover. See "Remove the rear top cover" on page 371.

Step 4. Remove the crossbar. See "Remove the crossbar" on page 125.

Step 5. Record the cable connections and disconnect the PCIe riser cables from the system board assembly. See

Attention: To avoid damaging the system board assembly, make sure to follow the instructions in ***Internal Cable Routing Guide*** when disconnecting cables from the system board assembly.

Step 6. Remove the PCIe riser where the GPU is installed. See "Remove the PCIe riser" on page 249.

Step 7. Remove the riser extender cover.

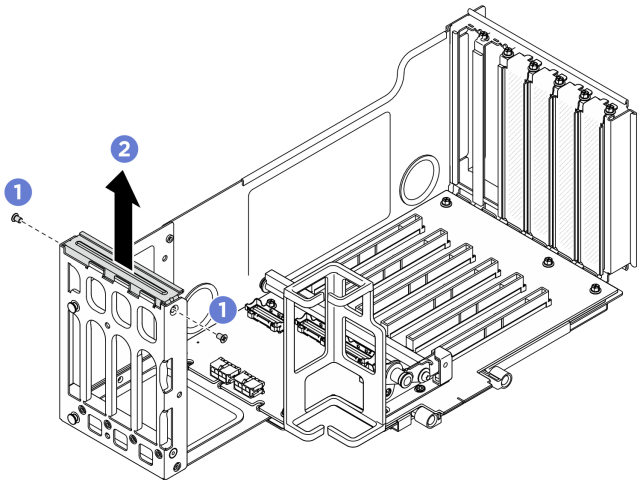

Figure 94. Removing riser extender cover

a. 1 Remove the screws that secure the riser extender cover.

b. 2 Lift the riser extender cover out from the PCIe riser.

Step 8. Disconnect the power cable from the GPU adapter and PCIe riser.

Note: The GPU adapter in the following images is for illustration only. Your GPU adapter might look different.

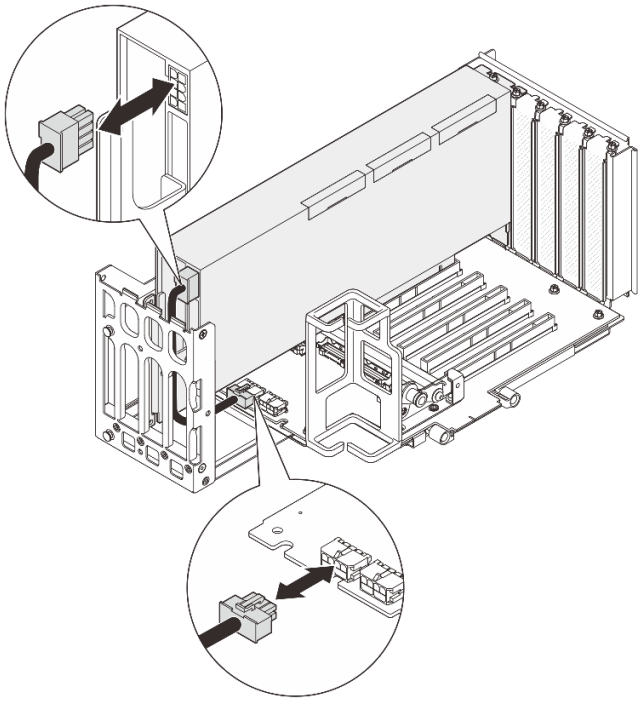

Figure 95. Disconnecting power cable from GPU adapter

Step 9. Remove the GPU adapter.

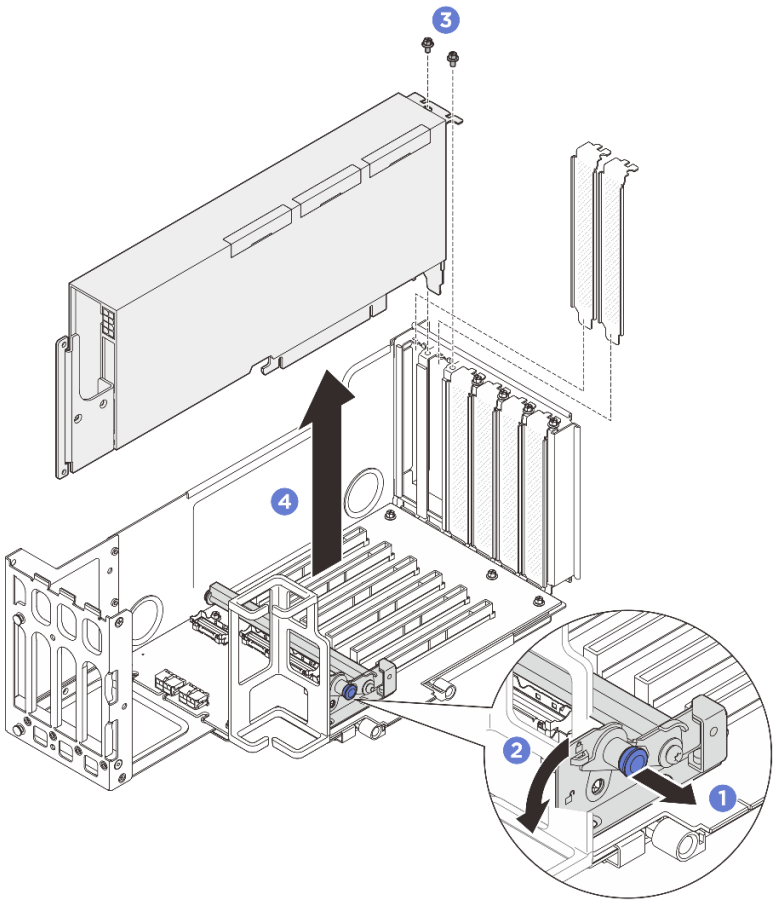

Figure 96. Removing GPU adapter from PCIe riser

a. ❶ Pull the plunger that secures the PCIe adapter retainer.
b. ❷ Open the PCIe adapter retainer to the unlocked position.
c. ❸ Remove the screws that secure the GPU adapter to the PCIe riser.
d. ❹ Grasp the GPU adapter by its edges and carefully pull it out of the PCIe slot.

Step 10. If necessary, install the riser extender cover.

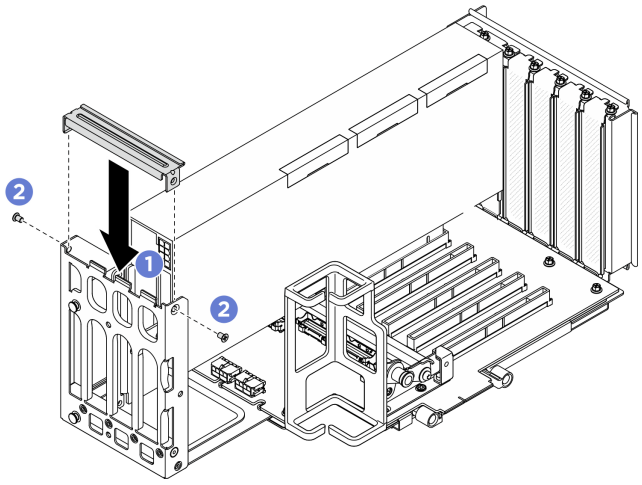

Figure 97. Installing riser extender cover

a. ❶ Install the riser extender cover.
b. ❷ Install the screws to secure the riser extender cover.

After you finish

1. Install a replacement unit. See “Install a double-wide GPU adapter” on page 165.
2. If you are instructed to return the component or optional device, follow all packaging instructions, and use any packaging materials for shipping that are supplied to you.

Demo video

Watch the procedure on YouTube

Install a double-wide GPU adapter

Follow the instructions in this section to install a double-wide GPU adapter.

About this task

S002

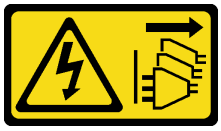

CAUTION:
The power-control button on the device and the power switch on the power supply do not turn off the electrical current supplied to the device. The device also might have more than one power cord. To remove all electrical current from the device, ensure that all power cords are disconnected from the power source.

Attention:

- Read “Installation Guidelines” on page 45 and “Safety inspection checklist” on page 46 to ensure that you work safely.

- Power off the server and peripheral devices and disconnect the power cords and all external cables. See “Power off the server” on page 61.
- Prevent exposure to static electricity, which might lead to system halt and loss of data, by keeping static-sensitive components in their static-protective packages until installation, and handling these devices with an electrostatic-discharge wrist strap or other grounding system.
- Depending on the specific type, your GPU adapter might look slightly different from the illustrations in this section.
- Follow the additional instructions in any documentation that comes with your GPU adapter.

Notes:

- For a list of the supported GPU adapters, see https://serverproven.lenovo.com.
- Ensure that you observe the installation rules and sequence order in “PCIe riser and adapter installation rules and order” on page 58.
- For instructions on how to remove and install a PCIe adapter or single-wide GPU, see “PCIe riser and PCIe adapter replacement” on page 248.

Firmware and driver download: You might need to update the firmware or driver after replacing a component.

- Go to https://datacentersupport.lenovo.com/products/servers/thinksystem/sr860v4/7djn/downloads/driver-list to see the latest firmware and driver updates for your server.
- Go to “Update the firmware” on page 386 for more information on firmware updating tools.

Procedure

Step 1. If a filler has been installed to the slot on the PCIe riser, remove the screw that secures it and remove the filler.

Step 2. If a riser extender cover is installed, remove it.

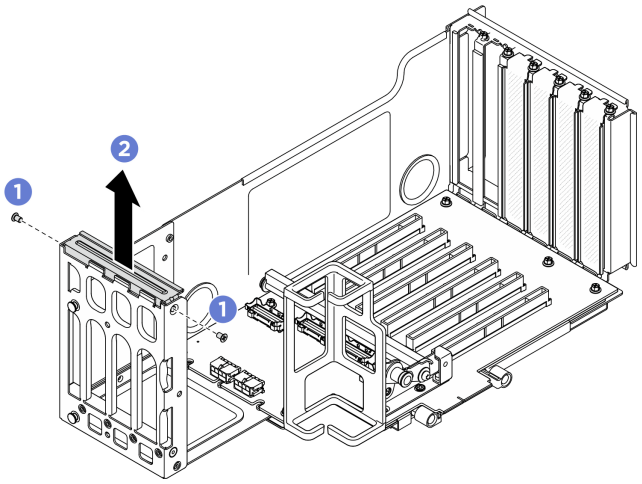

Figure 98. Removing riser extender cover

a. 1 Remove the screws that secure the riser extender cover.

b. 2 Lift the riser extender cover out from the PCIe riser.

Step 3. Install the GPU adapter.

Notes:

- Ensure that you observe the installation rules and sequence order in “PCIe riser and adapter installation rules and order” on page 58.
- The GPU adapter in the following images is for illustration only. Your GPU adapter might look different.

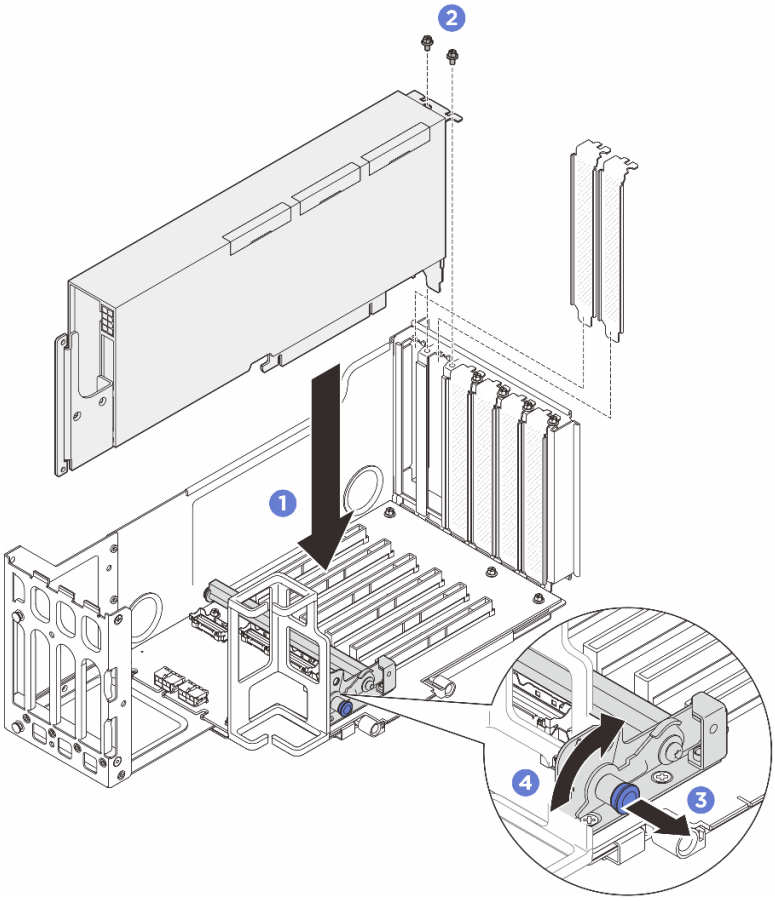

Figure 99. Installing GPU adapter to PCIe riser

a. 1 Align the GPU adapter with the connector on the PCIe riser; then, carefully press the GPU adapter straight into the slot until it is securely seated and its bracket also is secured.
b. 2 Secure the GPU adapter with two screws.
c. 3 Pull the plunger that secures the PCIe adapter retainer.
d. 4 Close the PCIe adapter retainer to the locked position.

Step 4. Connect the power cable to the GPU adapter and PCIe riser.

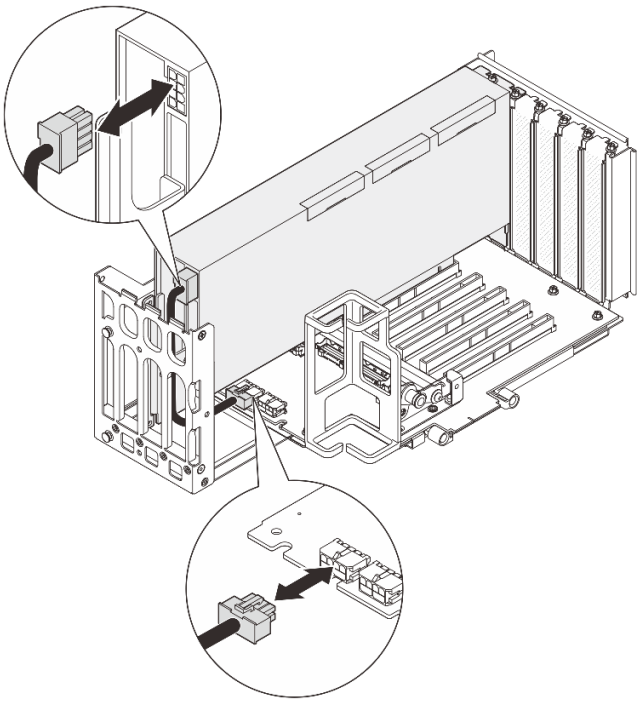

Figure 100. Connecting power cable to GPU adapter

Step 5. Install the riser extender cover.

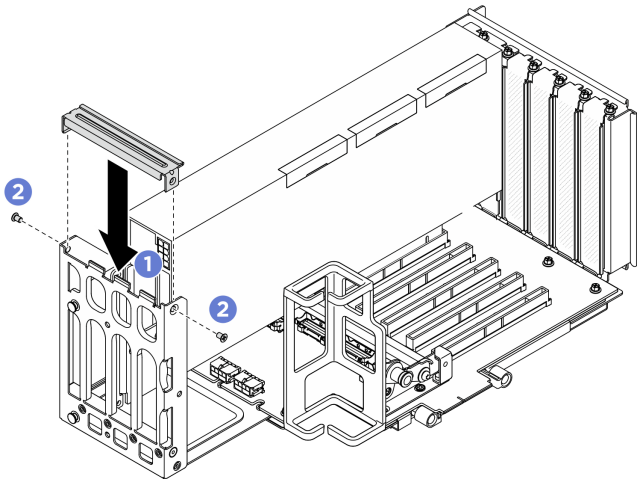

Figure 101. Installing riser extender cover

a. 1 Install the riser extender cover.

b. 2 Install the screws to secure the riser extender cover.

After you finish

1. Reinstall the PCIe risers. See “Install the PCIe riser” on page 261.
2. Reinstall the crossbar. See “Install the crossbar” on page 128.
3. Reinstall the rear top cover. See “Install the rear top cover” on page 373.
4. Reinstall the front top cover. See “Install the front top cover” on page 375.

5. Complete the parts replacement. See “Complete the parts replacement” on page 382.

Demo video

Watch the procedure on YouTube

Intrusion switch replacement

Follow instructions in this section to remove and install the intrusion switch.

Remove the intrusion switch

Follow the instructions in this section to remove the intrusion switch.

About this task

S002

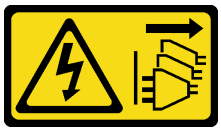

CAUTION:
The power-control button on the device and the power switch on the power supply do not turn off the electrical current supplied to the device. The device also might have more than one power cord. To remove all electrical current from the device, ensure that all power cords are disconnected from the power source.

Attention:

- Read “Installation Guidelines” on page 45 and “Safety inspection checklist” on page 46 to ensure that you work safely.
- Power off the server and peripheral devices and disconnect the power cords and all external cables. See “Power off the server” on page 61.
- Prevent exposure to static electricity, which might lead to system halt and loss of data, by keeping static-sensitive components in their static-protective packages until installation, and handling these devices with an electrostatic-discharge wrist strap or other grounding system.

Procedure

Step 1. If the server is installed in a rack, slide the server out on its rack slide rails to gain access to the top covers, or remove the server from the rack. See “Server replacement” on page 67.

Step 2. Remove the front top cover. See “Remove the front top cover” on page 369.

Step 3. If necessary, remove the rear air baffle. See “Remove the rear air baffle” on page 112.

Step 4. Disconnect the intrusion switch cable from the connector 1 on the system board assembly.

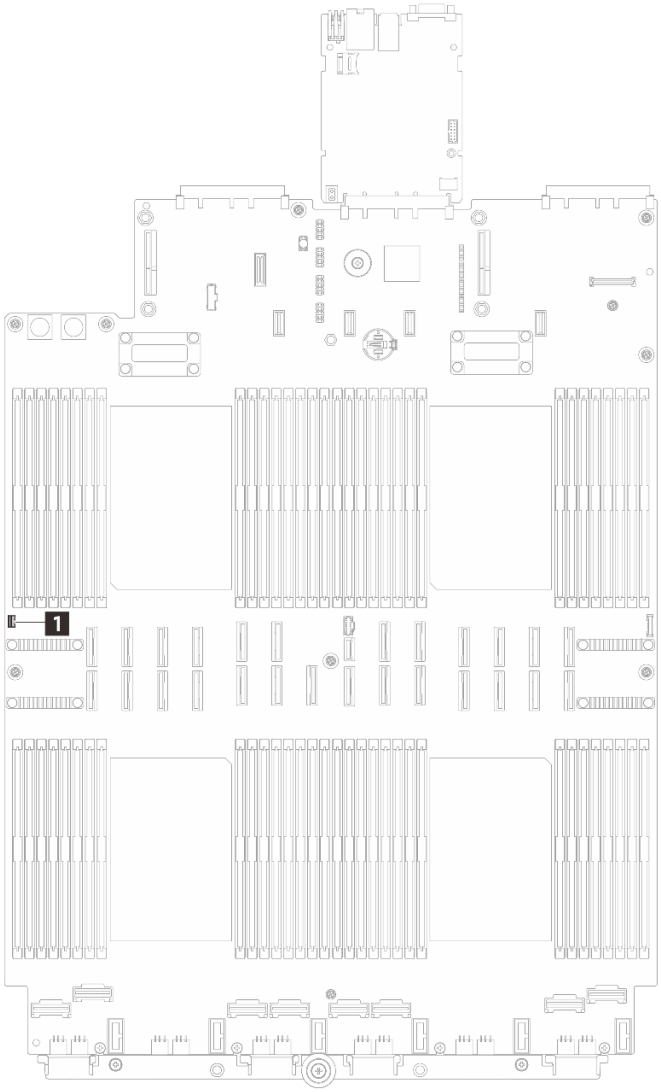

Figure 102. Disconnecting the intrusion switch

Step 5. Grasp the intrusion switch and pull it out of the bracket.

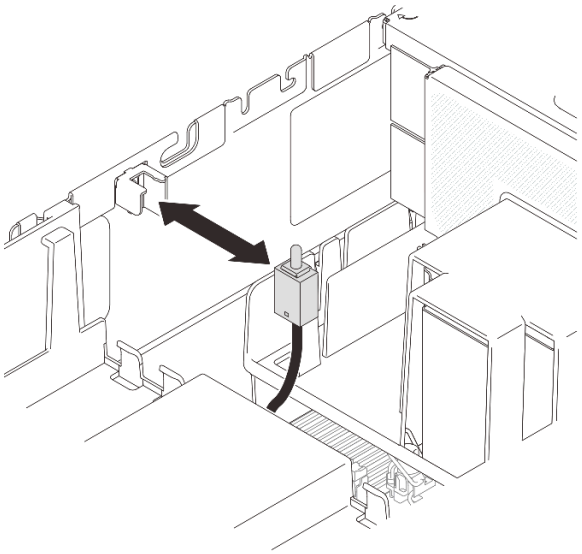

Figure 103. Removing the intrusion switch

After you finish

1. Install a replacement unit. See “Install the intrusion switch” on page 171.
2. If you are instructed to return the component or optional device, follow all packaging instructions, and use any packaging materials for shipping that are supplied to you.

Demo video

Watch the procedure on YouTube

Install the intrusion switch

Follow the instructions in this section to install the intrusion switch.

About this task

Attention:

- Read “Installation Guidelines” on page 45 and “Safety inspection checklist” on page 46 to ensure that you work safely.
- Power off the server and peripheral devices and disconnect the power cords and all external cables. See “Power off the server” on page 61.
- Prevent exposure to static electricity, which might lead to system halt and loss of data, by keeping static-sensitive components in their static-protective packages until installation, and handling these devices with an electrostatic-discharge wrist strap or other grounding system.

Procedure

Step 1. Align the intrusion switch with the bracket and push it into the bracket. Make sure the intrusion switch is fully seated in the bracket.

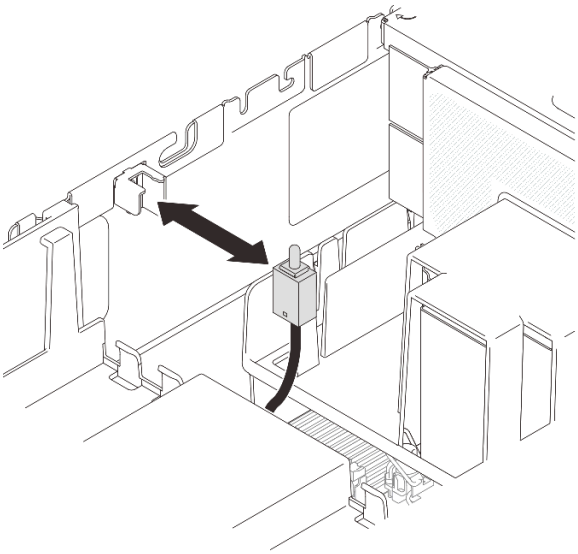

Figure 104. Installing the intrusion switch

Step 2. Connect the cable to the system board assembly.

Note: When routing the intrusion switch cable, route the cable through the cable clip on the air baffle as shown in the illustration. Ensure that the cable does not touch the VR area (marked in dotted lines) on the system board assembly and is not entangled with other high-speed signal cables.

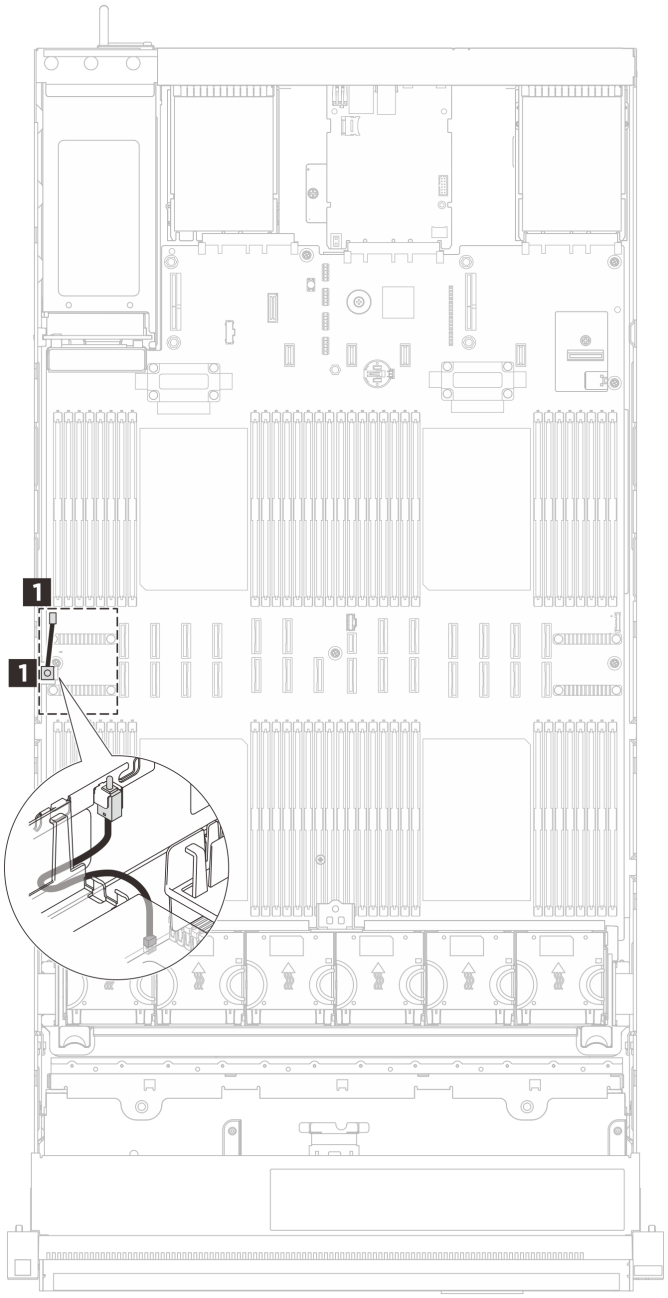

Figure 105. Connecting the intrusion switch

After you finish

1. Reinstall the rear air baffle if you have removed it. See “Install the front air baffle” on page 109.
2. Reinstall the front top cover. See “Install the rear air baffle” on page 115.
3. Complete the parts replacement. See “Complete the parts replacement” on page 382.

Demo video

Watch the procedure on YouTube

Internal M.2 boot adapter and M.2 drive replacement

Follow instructions in this section to remove and install the internal M.2 boot adapter and an M.2 drive.

Remove an M.2 drive

Follow the instructions in this section to remove an M.2 drive.

About this task

Attention:

- Read “Installation Guidelines” on page 45 and “Safety inspection checklist” on page 46 to ensure that you work safely.
- Power off the server and peripheral devices and disconnect the power cords and all external cables. See “Power off the server” on page 61.
- Prevent exposure to static electricity, which might lead to system halt and loss of data, by keeping static-sensitive components in their static-protective packages until installation, and handling these devices with an electrostatic-discharge wrist strap or other grounding system.
- Before you remove or make changes to drives, drive controllers (including controllers that are integrated on the system board assembly), drive backplanes or drive cables, back up all important data that is stored on drives.

Procedure

Step 1. If the server is installed in a rack, slide the server out on its rack slide rails to gain access to the top covers, or remove the server from the rack. See “Server replacement” on page 67.

Step 2. Remove the front top cover. See “Remove the front top cover” on page 369.

Step 3. Remove the M.2 drive.

Note: The M.2 boot adapter and drive shown in the illustrations are for reference only and may differ from your actual hardware.

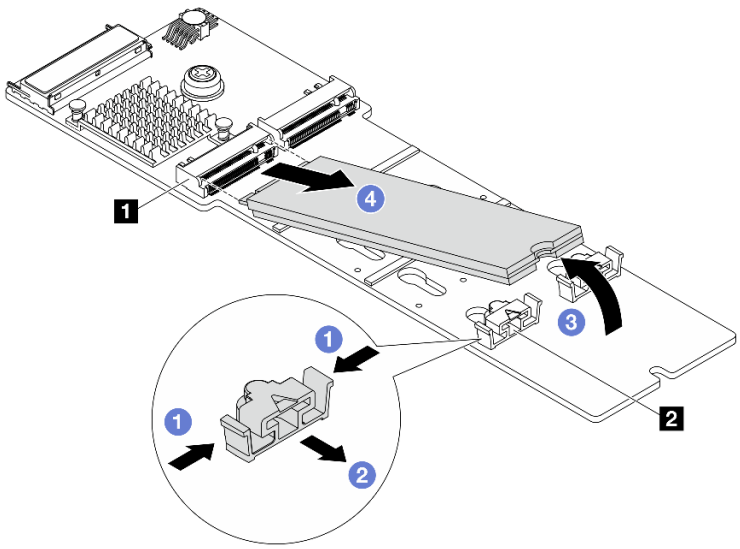

Figure 106. Removing M.2 drive

a. ❶ Pinch and hold on the retainer 2.
b. ❷ Slide the retainer backward to loosen the M.2 drive from the M.2 boot adapter.
c. ❸ Rotate the rear end of the M.2 drive to an angle of approximately 30 degrees.
d. ❹ Pull the M.2 drive away from the connector 1.

After you finish

1. Install a new M.2 drive. See "Install an M.2 drive" on page 179.
2. If you are instructed to return the component or optional device, follow all packaging instructions, and use any packaging materials for shipping that are supplied to you.

Demo video

Watch the procedure on YouTube

Remove the M.2 boot adapter

Follow instructions in this section to remove the M.2 boot adapter.

About this task

Attention:

- Read "Installation Guidelines" on page 45 and "Safety inspection checklist" on page 46 to ensure that you work safely.
- Power off the server and peripheral devices and disconnect the power cords and all external cables. See "Power off the server" on page 61.
- Prevent exposure to static electricity, which might lead to system halt and loss of data, by keeping static-sensitive components in their static-protective packages until installation, and handling these devices with an electrostatic-discharge wrist strap or other grounding system.
- Before you remove or make changes to drives, drive controllers (including controllers that are integrated on the system board assembly), drive backplanes or drive cables, back up all important data that is stored on drives.

Note: The M.2 boot adapter and drive shown in the illustrations are for reference only and may differ from your actual hardware.

Procedure

Step 1. If the server is installed in a rack, slide the server out on its rack slide rails to gain access to the top covers, or remove the server from the rack. See "Server replacement" on page 67.

Step 2. Remove the front top cover. See "Remove the front top cover" on page 369.

Step 3. Remove all of the M.2 drives. See "Remove an M.2 drive" on page 174.

Step 4. If necessary, disconnect the M.2 boot adapter cables from the system board assembly.

Attention: To avoid damaging the system board assembly, make sure to follow the instructions in ***Internal Cable Routing Guide*** when disconnecting cables from the system board assembly.

Step 5. Disconnect the M.2 boot adapter cables from the M.2 boot adapter.

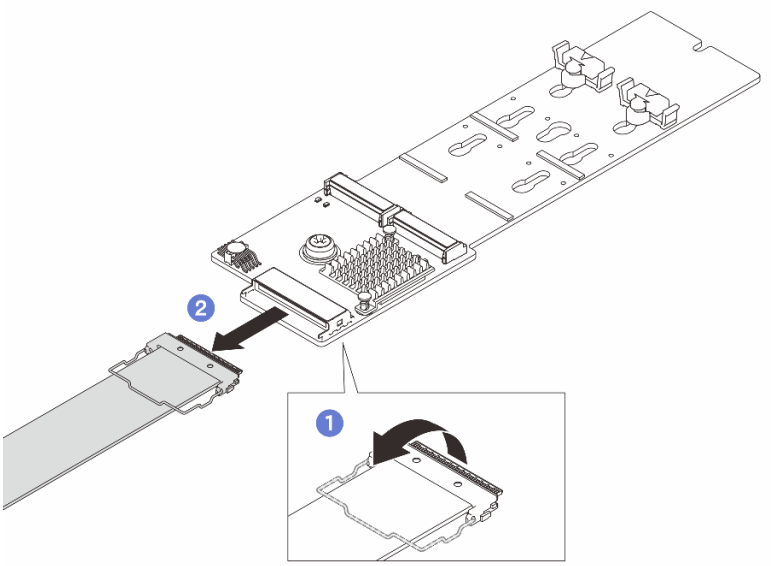

Figure 107. M.2 boot adapter cable disconnection

a. 1 Unhook the wire bail on the cable from the connector.

b. 2 Disconnect the cables from the M.2 boot adapter.

Step 6. Remove the M.2 boot adapter.

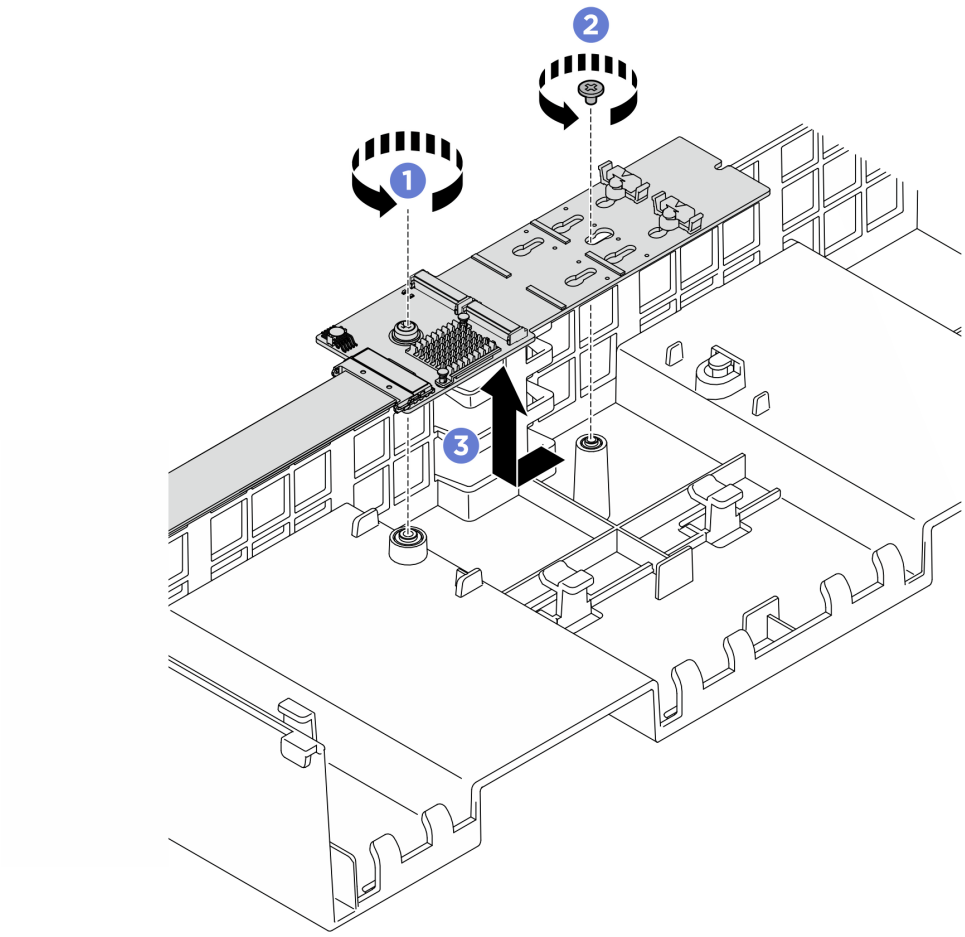

Figure 108. M.2 boot adapter removal

a. 1 Remove the screw that secures the middle of the M.2 boot adapter to the front air baffle.
b. 2 Remove the screw that secures the end of the M.2 boot adapter to the front air baffle
c. 3 Slide the M.2 boot adapter backward and lift it out of the front air baffle.

After you finish

1. Install a new M.2 boot adapter. See "Install the M.2 boot adapter" on page 177.
2. If you are instructed to return the component or optional device, follow all packaging instructions, and use any packaging materials for shipping that are supplied to you.

Demo video

Watch the procedure on YouTube

Install the M.2 boot adapter

Follow instructions in this section to install the M.2 backplane.

About this task

Attention:

- Read “Installation Guidelines” on page 45 and “Safety inspection checklist” on page 46 to ensure that you work safely.
- Power off the server and peripheral devices and disconnect the power cords and all external cables. See “Power off the server” on page 61.
- Prevent exposure to static electricity, which might lead to system halt and loss of data, by keeping static-sensitive components in their static-protective packages until installation, and handling these devices with an electrostatic-discharge wrist strap or other grounding system.

Firmware and driver download: You might need to update the firmware or driver after replacing a component.

- Go to https://datacentersupport.lenovo.com/products/servers/thinksystem/sr860v4/7djn/downloads/driver-list to see the latest firmware and driver updates for your server.
- Go to “Update the firmware” on page 386 for more information on firmware updating tools.

Note: The M.2 boot adapter and drive shown in the illustrations are for reference only and may differ from your actual hardware.

Procedure

Step 1. Touch the static-protective package that contains the new part to any unpainted surface on the outside of the server; then, take the new part out of the package and place it on a static-protective surface.

Step 2. Install the M.2 boot adapter.

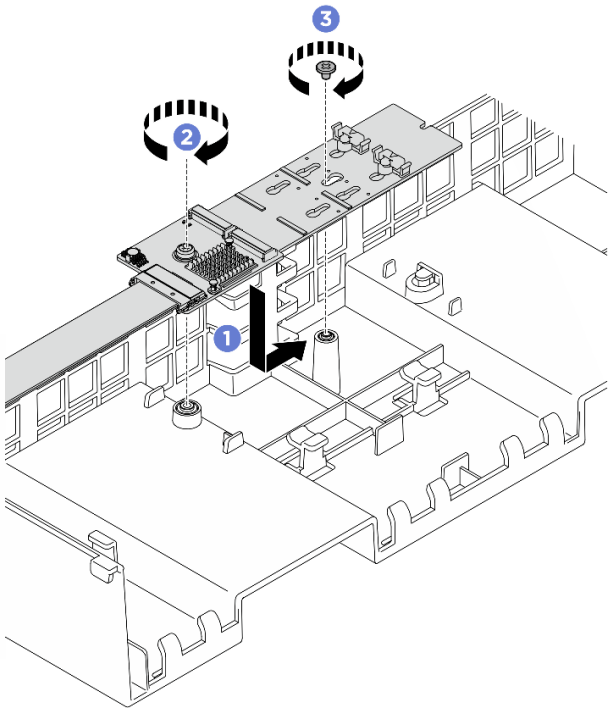

Figure 109. M.2 boot adapter installation

a. 1 Lower the M.2 boot adapter into the front air baffle; then, slide the M.2 boot adapter forward until it is seated in place.

b. 2 Install the screw that secures the end of the M.2 boot adapter to the front air baffle

c. 3 Install the screw that secures the middle of the M.2 boot adapter to the front air baffle.

Step 3. Connect the M.2 boot adapter cable to the M.2 boot adapter.

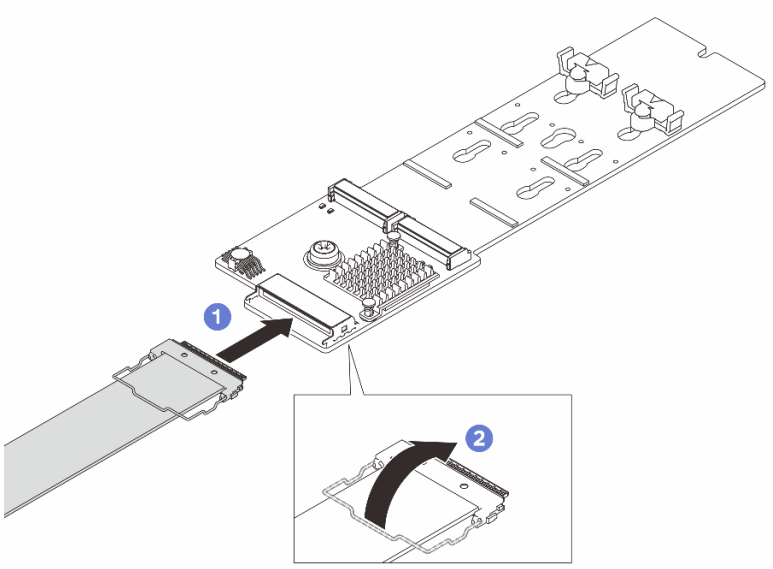

Figure 110. M.2 boot adapter cable connection

a. 1 Connect the cable to the M.2 boot adapter.

b. 2 Hook the wire bail on the cable onto the connector.

Step 4. If necessary, connect the M.2 cables to the M.2 power connector and the signal connector on the system board assembly. See ***Internal Cable Routing Guide*** for more details.

After you finish

1. Reinstall the M.2 drives. See "Install an M.2 drive" on page 179.
2. Complete the parts replacement. See "Complete the parts replacement" on page 382.

Demo video

Watch the procedure on YouTube

Install an M.2 drive

Follow the instructions in this section to install an M.2 drive.

About this task

Attention:

- Read "Installation Guidelines" on page 45 and "Safety inspection checklist" on page 46 to ensure that you work safely.
- Power off the server and peripheral devices and disconnect the power cords and all external cables. See "Power off the server" on page 61.
- Prevent exposure to static electricity, which might lead to system halt and loss of data, by keeping static-sensitive components in their static-protective packages until installation, and handling these devices with an electrostatic-discharge wrist strap or other grounding system.

Firmware and driver download: You might need to update the firmware or driver after replacing a component.

- Go to https://datacentersupport.lenovo.com/products/servers/thinksystem/sr860v4/7djn/downloads/driver-list to see the latest firmware and driver updates for your server.
- Go to "Update the firmware" on page 386 for more information on firmware updating tools.

Procedure

Step 1. Touch the static-protective package that contains the new part to any unpainted surface on the outside of the server; then, take the new part out of the package and place it on a static-protective surface.

Step 2. Locate the connector on the M.2 boot adapter.

Notes:

- The M.2 boot adapter and drive shown in the illustrations are for reference only and may differ from your actual hardware.
- Install the M.2 drive in slot 0 first.

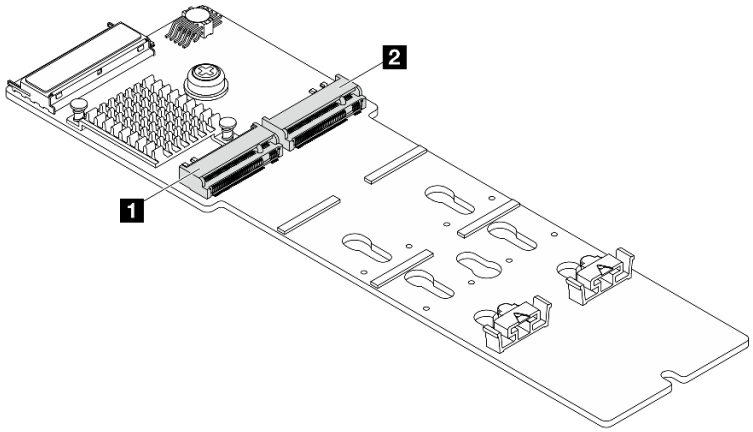

Figure 111. M.2 drive slots

1 Slot 0	2 Slot 1

Step 3. (Optional) Adjust the retainer on the M.2 boot adapter to accommodate the particular size of the M.2 drive you wish to install.

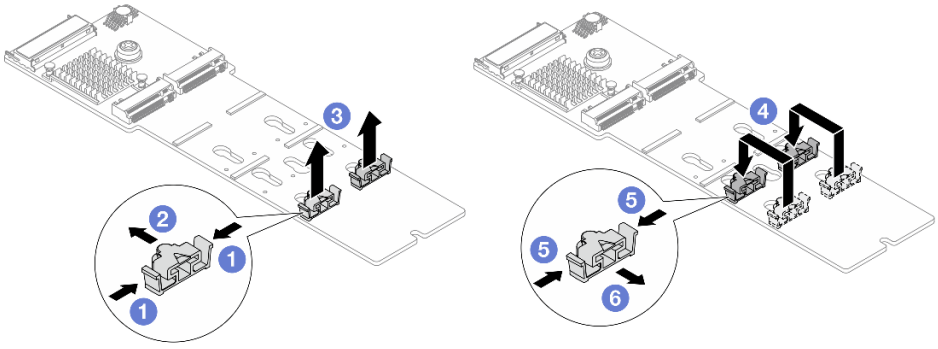

Figure 112. M.2 retainer adjustment

a. 1 Press both sides of the retainer.
b. 2 Move the retainer forward until it is in the large opening of the keyhole.
c. 3 Take the retainer out of the keyhole; then, insert the retainer into the correct keyhole.
d. 4 Insert the retainer into the suitable keyhole.
e. 5 Press both sides of the retainer.
f. 6 Slide the retainer backwards (toward the small opening of the keyhole) until it is seated in place.

Step 4. Install M.2 drive into M.2 boot adapter.

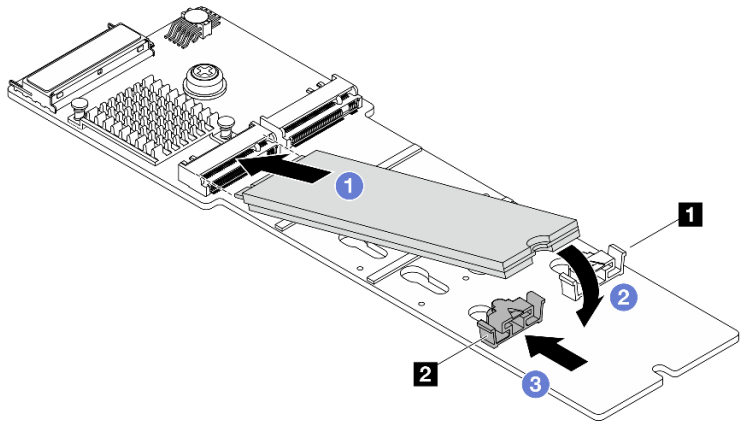

Figure 113. Installing M.2 drive

a. 1 Insert the M.2 drive into the slot at an angle of approximately 30 degrees.
b. 2 Pivot the M.2 drive down until the notch at the end of the M.2 drive catches on the lip of the retainer.
c. 3 Slide the retaining clip forward to secure the M.2 drive to the M.2 boot adapter.

After you finish

Complete the parts replacement. See “Complete the parts replacement” on page 382.

Demo video

Watch the procedure on YouTube

Lenovo Processor Neptune Core Module replacement (trained technicians only)

Follow the instructions in this section to remove and install the Processor Neptune® Core Module.

Note: If you are replacing a processor with heat sink, see “Processor and heat sink replacement (trained technician only)” on page 305.

Important:
- This task must be operated by trained technicians that are certified by Lenovo Service. Do not attempt to remove or install the part without proper training and qualification.

- Contact Lenovo Professional Services team for help when installing the part for the first time.
- Configurations with Processor Neptune® Core Module do not support rail kits with cable management arm (CMA).
- When the server has a Processor Neptune® Core Module installed, you must apply for a shipping bracket FRU first if you need to install or remove the system board assembly or processor. However, when replacing the old Processor Neptune® Core Module with a new one, you do not need to apply for a shipping bracket FRU as the new module package contains it.

Remove the Lenovo Processor Neptune Core Module

Follow the instructions in this section to remove the Processor Neptune® Core Module.

Important:
- This task must be operated by trained technicians that are certified by Lenovo Service. Do not attempt to remove or install the part without proper training and qualification.
- Contact Lenovo Professional Services team for help when installing the part for the first time.
- Make sure you have the water loop shipping bracket available before performing this task.

About this task

Safety information for liquid detection sensor module cable

S011



CAUTION:
Sharp edges, corners, or joints nearby.

Attention:

- Read “Installation Guidelines” on page 45 and “Safety inspection checklist” on page 46 to ensure that you work safely.
- Power off the server and peripheral devices and disconnect the power cords and all external cables. See “Power off the server” on page 61.
- Prevent exposure to static electricity, which might lead to system halt and loss of data, by keeping static-sensitive components in their static-protective packages until installation, and handling these devices with an electrostatic-discharge wrist strap or other grounding system.
- Each processor socket must always contain a cover or a cold plate. When removing or installing a cold plate assembly, protect empty processor sockets with a cover.
- Do not touch the processor socket or processor contacts. Processor-socket contacts are very fragile and easily damaged. Contaminants on the processor contacts, such as oil from your skin, can cause connection failures.
- Do not allow the thermal grease on the processor or cold plate to come in contact with anything. Contact with any surface can compromise the thermal grease, rendering it ineffective. Thermal grease can damage components, such as the electrical connectors in the processor socket.

Torque screwdriver type list	Screw Type
Torx T30 head screwdriver	Torx T30 screw

Procedure

Step 1. Make preparations for this task.

a. Remove the quick connect plugs from the manifolds. See “Remove the manifold (in-rack system)” on page 198 or “Remove the manifold (in-row system)” on page 218.

b. Remove the server from the rack. See “Remove the server from the rack (2.5-inch bay chassis)” on page 68 or “Remove the server from the rack (E3.S bay chassis)” on page 82.

c. Remove the front top cover. See “Remove the front top cover” on page 369.

d. Remove the rear top cover. See “Remove the rear top cover” on page 371.

e. Remove the front air baffle. See “Remove the front air baffle” on page 107.

f. Remove the fans and the fan cage. See “Remove a fan” on page 150 and “Remove the fan cage” on page 152.

g. Remove the crossbar. See “Remove the crossbar” on page 125.

h. Remove the PCIe risers. See “Remove the PCIe riser” on page 249.

i. Remove the rear air baffle. See “Remove the rear air baffle” on page 112.

j. Label the slot number on each memory module from slot 9-24 and slot 41-56; then, remove them from the system board assembly and set them aside on a static-protective surface for reinstallation. See “Remove a memory module” on page 236.

Step 2. Disconnect the leakage detection sensor module cable from the connector 1 on the system board assembly.

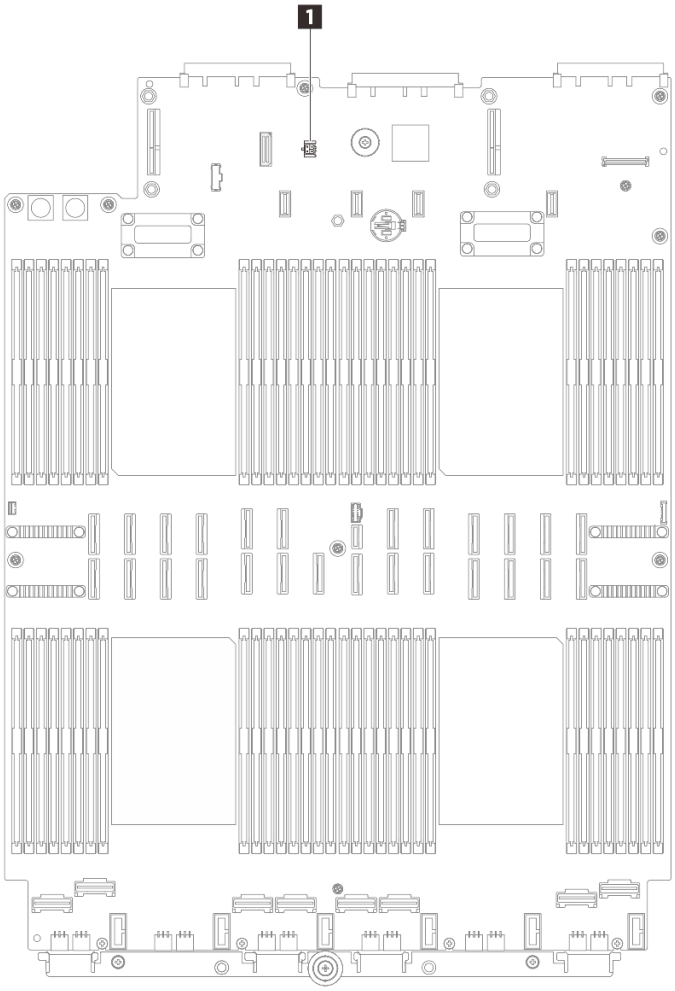

Figure 114. Disconnecting leakage detection sensor module

Step 3. Remove the riser filler.

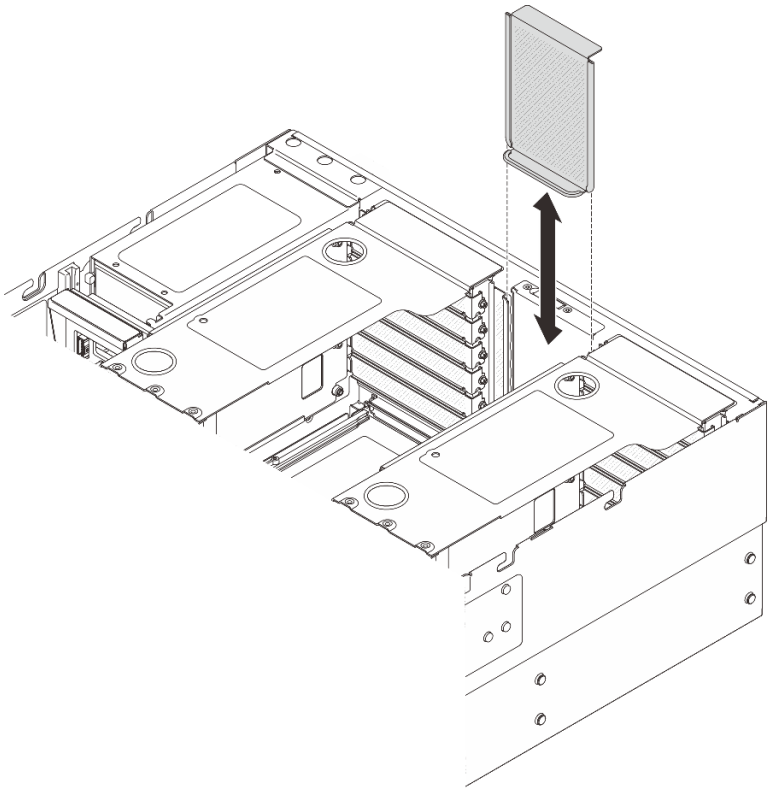

Figure 115. Removing riser filler

Step 4. Remove the cold plate covers.

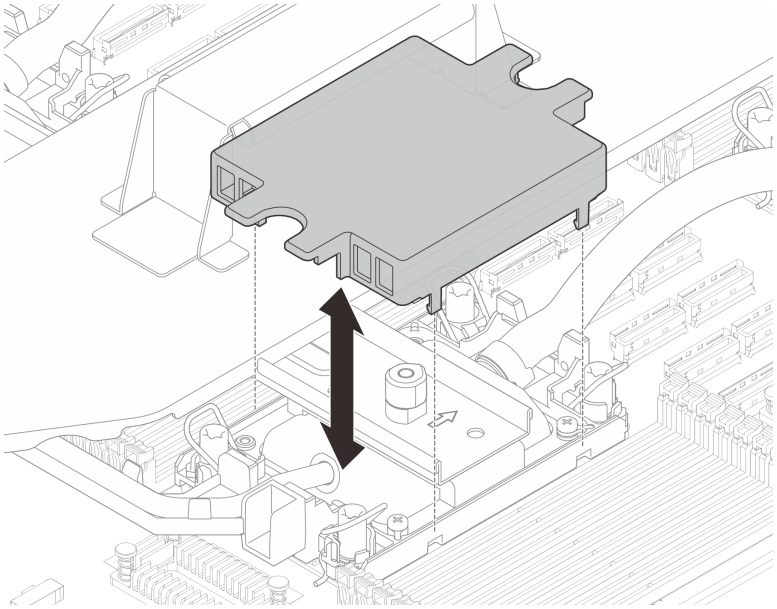

Figure 116. Removing cold plate covers

Step 5. Align and place the cold plate carrier onto the cold plate assembly.

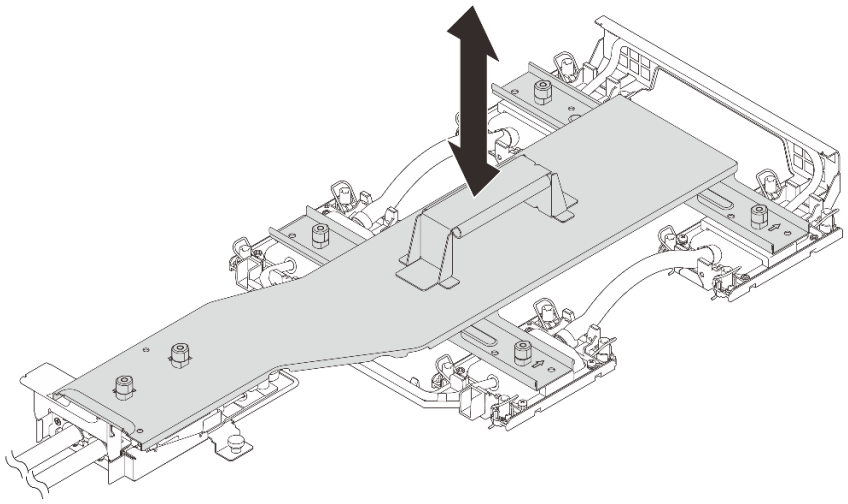

Figure 117. Installing cold plate carrier

Step 6. Rotate all plungers clockwise to the locked position in the installation sequence shown on the carrier label.

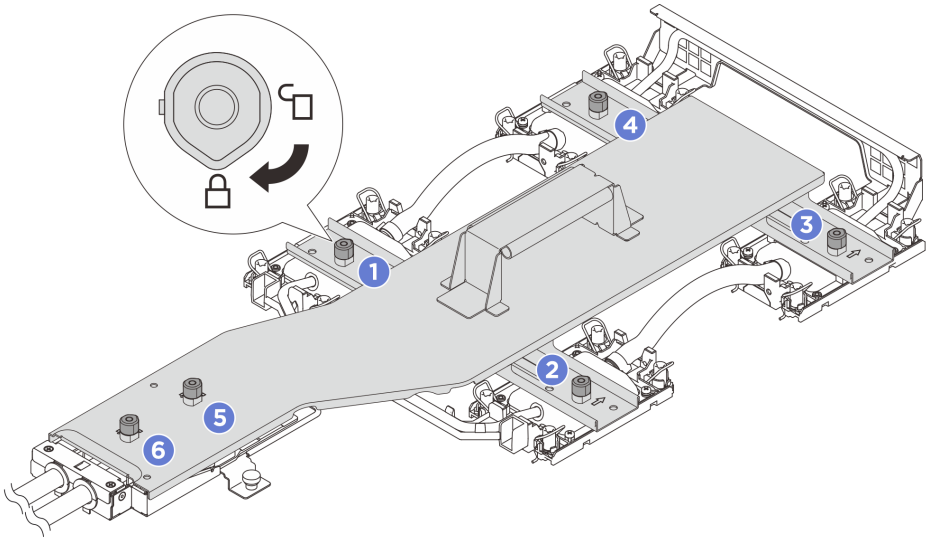

Figure 118. Securing cold plate carrier

Step 7. Loosen the Torx T30 nuts on the cold plate assembly.

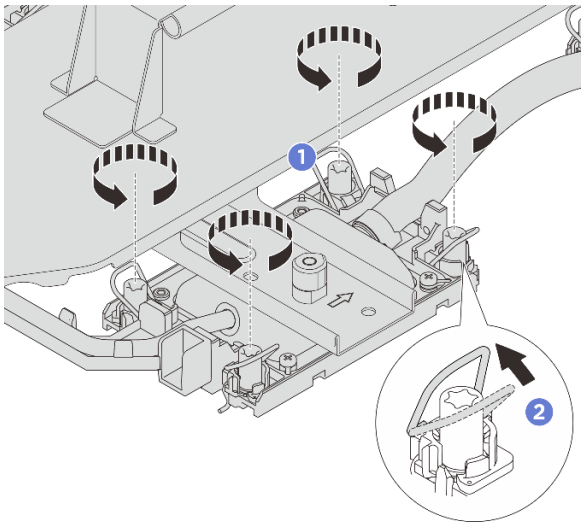

Figure 119. Loosening Torx T30 nuts

a. 1 Fully loosen the Torx T30 nuts on the cold plate assembly.

b. 2 Rotate the anti-tilt wire bails inward.

Step 8. Loosen the thumbscrews. Use a screwdriver if necessary.

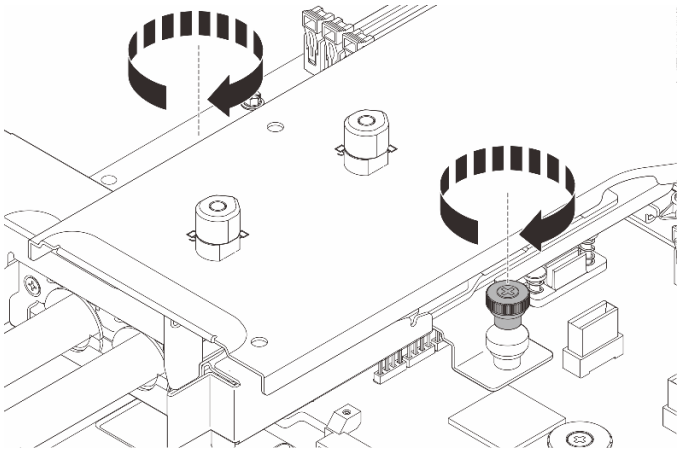

Figure 120. Removing cold plate assembly

Step 9. Remove the cold plate assembly.

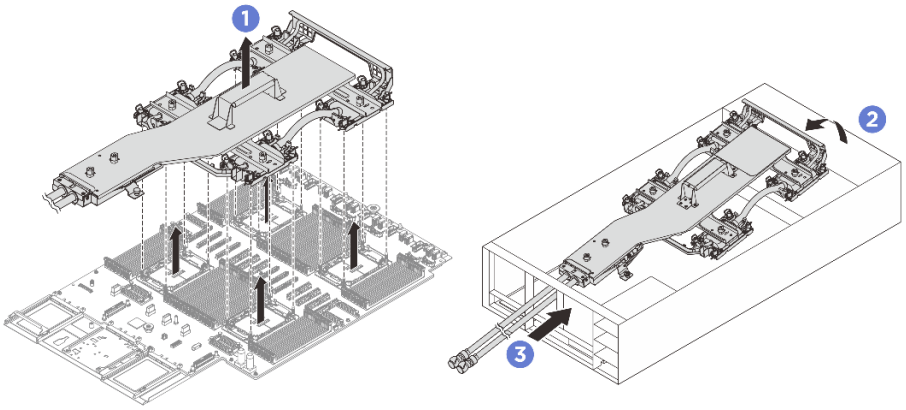

Figure 121. Removing cold plate assembly

a. 1 Hold the handle on the cold plate assembly and lift it from the system board assembly.

b. 2 Pivot the front of the cold plate assembly at an angle.

c. 3 Gently slide the cold plate assembly towards the front of the chassis; then, carefully lift the hoses of cold plate assembly out of the chassis.

Step 10. If you are replacing the processor or cold plate, separate the processor from the cold plate assembly. See "Separate the processor from carrier and heat sink" on page 309.

After you finish

If you are instructed to return the component or optional device, follow all packaging instructions, and use any packaging materials for shipping that are supplied to you.

Demo video

Watch the procedure on YouTube

Install the Lenovo Processor Neptune Core Module

Follow the instructions in this section to install the Processor Neptune® Core Module.

Important:
- This task must be operated by trained technicians that are certified by Lenovo Service. Do not attempt to remove or install the part without proper training and qualification.
- Contact Lenovo Professional Services team for help when installing the part for the first time.
- Make sure you have the water loop shipping bracket available before performing this task.

About this task

Attention:

- Read "Installation Guidelines" on page 45 and "Safety inspection checklist" on page 46 to ensure that you work safely.
- Power off the server and peripheral devices and disconnect the power cords and all external cables. See "Power off the server" on page 61.

- Prevent exposure to static electricity, which might lead to system halt and loss of data, by keeping static-sensitive components in their static-protective packages until installation, and handling these devices with an electrostatic-discharge wrist strap or other grounding system.
- Each processor socket must always contain a cover or a cold plate. When removing or installing a cold plate assembly, protect empty processor sockets with a cover.
- Do not touch the processor socket or processor contacts. Processor-socket contacts are very fragile and easily damaged. Contaminants on the processor contacts, such as oil from your skin, can cause connection failures.
- Do not allow the thermal grease on the processor or cold plate to come in contact with anything. Contact with any surface can compromise the thermal grease, rendering it ineffective. Thermal grease can damage components, such as the electrical connectors in the processor socket.

CAUTION:
When removing a new Processor Neptune® Core Module from the shipping box, lift out the cold plate assembly with the shipping tray attached to prevent thermal grease on the cold plate assembly from damage.

Torque screwdriver type list	Screw Type
Torx T30 head screwdriver	Torx T30 screw

Procedure

Step 1. Install the processor in the new carrier.

Notes:

- If you are replacing the processor and reusing the cold plate, use the new carrier that comes with the new processor.
- If you are replacing the cold plate and reusing the processor, and if the new cold plate comes with processor carriers, make sure to use the same type of carrier as the one you discarded.

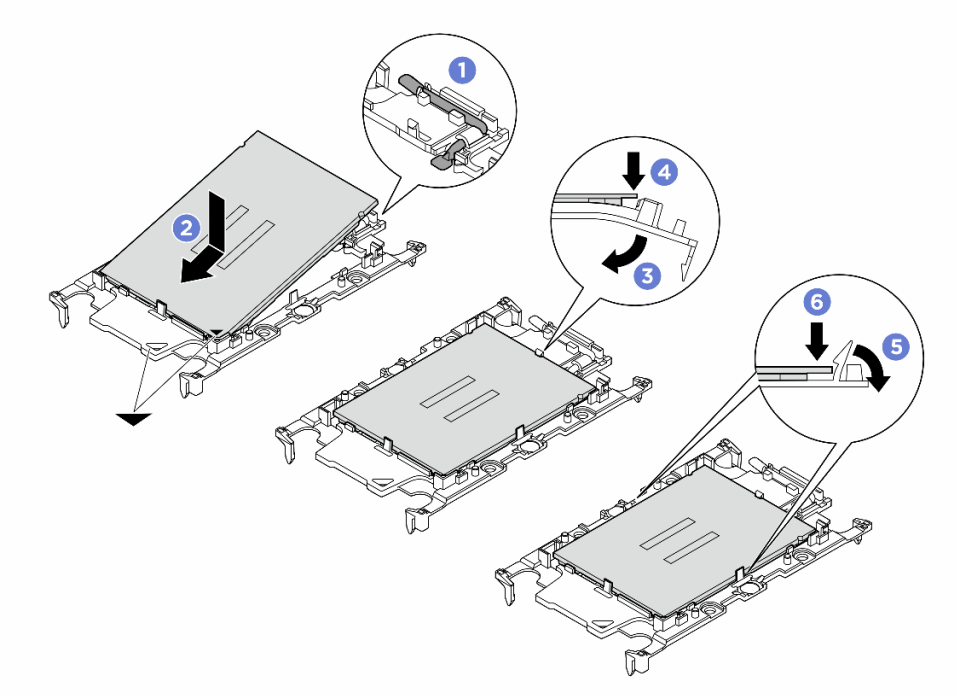

Figure 122. Processor carrier installation

Note: To prevent the processor from falling out of the carrier, keep the processor-contact side up and hold the processor-carrier assembly by the sides of the carrier.

1. 1 Make sure the handle on the carrier is in the closed position.
2. 2 Align the processor on the new carrier so that the triangular marks align; then, insert the marked end of the processor into the carrier.
3. 3 Hold the inserted end of the processor in place; then, pivot the unmarked end of the carrier down and away from the processor.
4. 4 Press the processor and secure the unmarked end under the clip on the carrier.
5. 5 Carefully pivot the sides of the carrier down and away from the processor.
6. 6 Press the processor and secure the sides under the clips on the carrier.

Step 2. Apply thermal grease.

- If you are replacing the cold plate and reusing the processor, a new cold plate comes with thermal grease and you do not need to apply new thermal grease.

  Note: To ensure the best performance, check the manufacturing date on the new cold plate and make sure it does not exceed two years. Otherwise, wipe off the existing thermal grease and apply new thermal grease.

- If you are replacing the processor and reusing the cold plate, do the following steps to apply thermal grease:

  1. If there is any old thermal grease on the cold plate, wipe off the thermal grease with an alcohol cleaning pad.
  2. Carefully place the processor and carrier in the shipping tray with the processor-contact side down. Make sure the triangular mark on the carrier is oriented in the shipping tray as shown below.
  3. Apply the thermal grease on the top of the processor with syringe by forming four uniformly spaced dots, while each dot consists of about 0.1 ml of thermal grease.

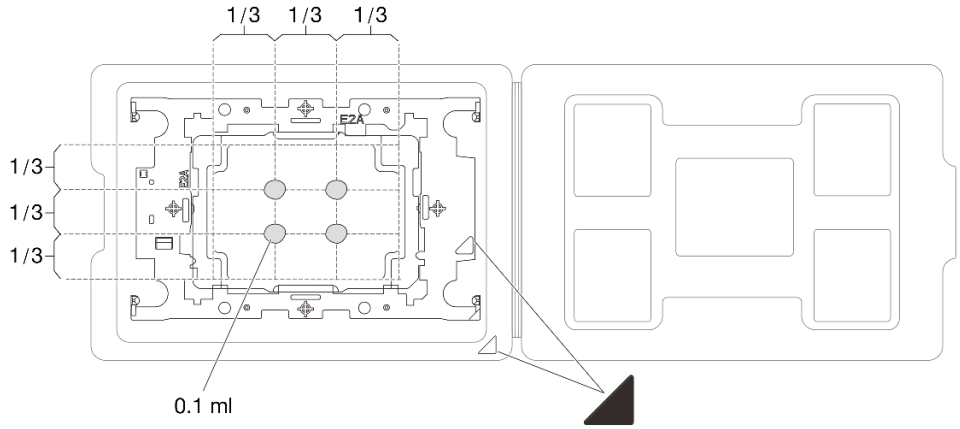

Figure 123. Thermal grease application with processor in shipping tray

Step 3. Assemble the processor and cold plate.

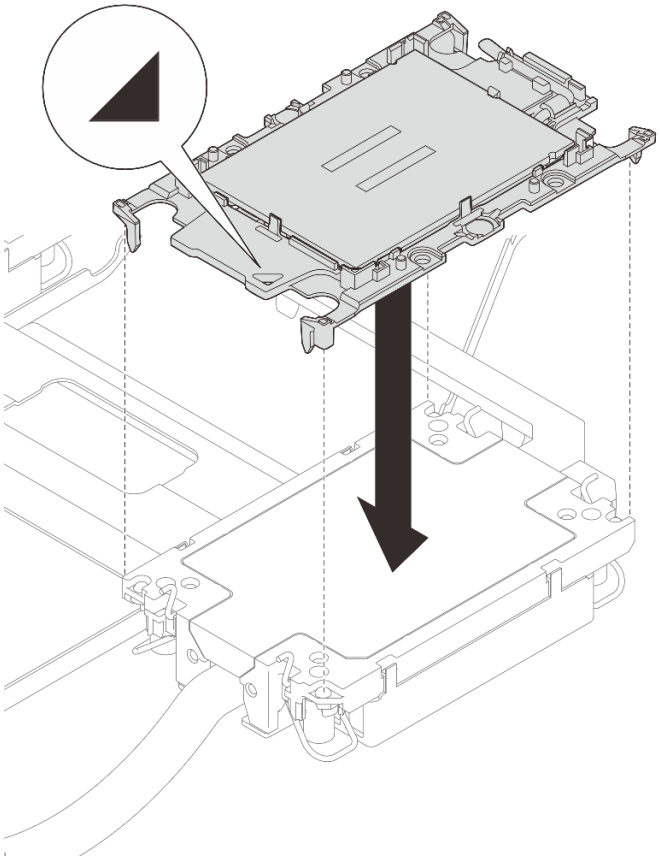

Figure 124. Installing processor to cold plate

a. Align the triangular mark on the processor carrier and processor with the triangular mark on the cold plate.

b. Install the processor-carrier onto the cold plate.

c. Press the carrier into place until the clips at all four corners engage. Visually inspect to make sure that there is no gap between the processor carrier and the cold plate.

Step 4. Install the cold plate assembly.

Note: If the server has only two processors installed, generally processors 1 and 2, it is required to install covers to the empty sockets of processors 3 and 4 before proceeding with further installation.

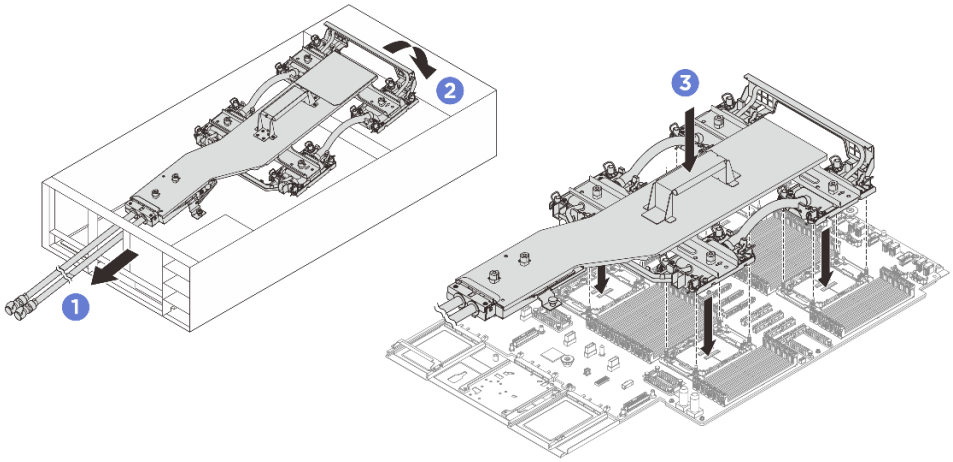

Figure 125. Installing cold plate assembly

Notes:

- Do not touch the contacts on the bottom of the processor.
- Keep the processor socket clean from any object to prevent possible damages.

a. 1 Hold the handle on the cold plate assembly and gently insert the hoses into the opening on the rear of the chassis.

b. 2 Pivot the front of the cold plate assembly at an angle and align the four Torx T30 nuts on each cold plate with the corresponding threaded posts of the processor socket.

c. 3 Insert the cold plate assembly into the processor socket.

Step 5. Tighten the thumbscrews to secure the cold plate assembly. Use a screwdriver if necessary.

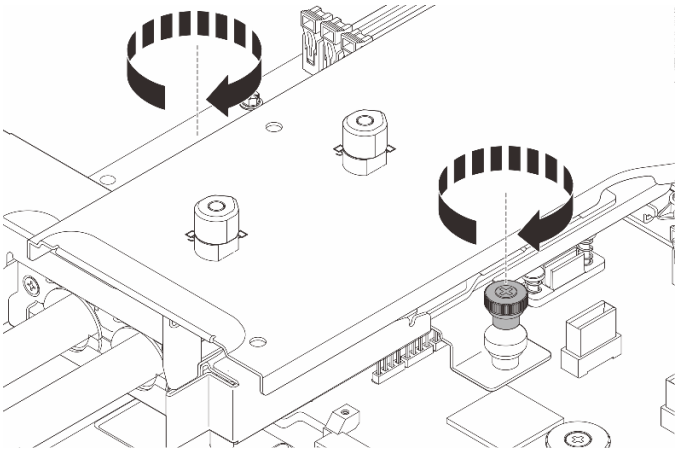

Figure 126. Installing cold plate assembly

Step 6. Tighten the Torx T30 nuts on the cold plate assembly.

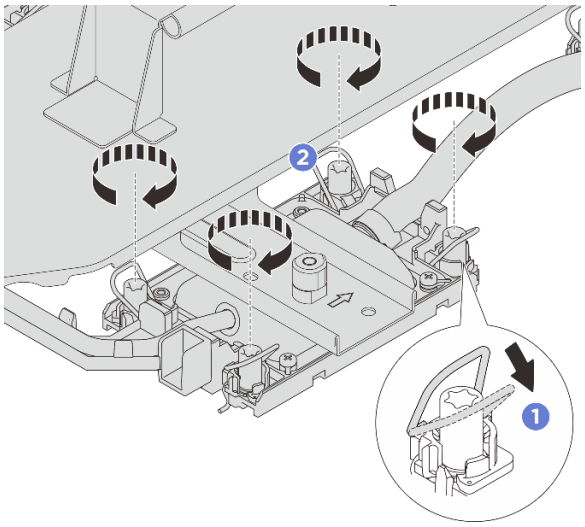

Figure 127. Tightening Torx T30 nuts

a. 1 Rotate the anti-tilt wire bails outward until they engage with the hooks in the socket.

b. 2 Fully tighten the Torx T30 nuts ***in the installation sequence shown*** on the cold plate assembly label. Tighten the screws until they stop; then, visually inspect to make sure that there is no gap between the screw shoulder beneath the cold plate assembly and the processor socket. (For reference, the torque required to fully tighten the nuts is 10 +/– 2.0 lbf-in, 1.1 +/– 0.2 N-m.)

Step 7. Rotate all plungers counterclockwise to the unlocked position in the removal sequence shown on the carrier label.

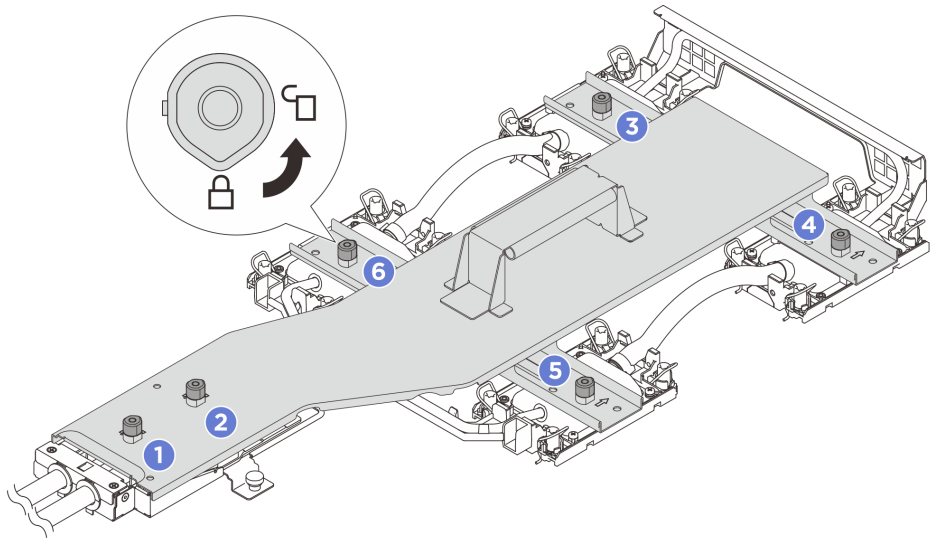

Figure 128. Loosening cold plate carrier

Step 8. Remove the cold plate carrier from the cold plate assembly.

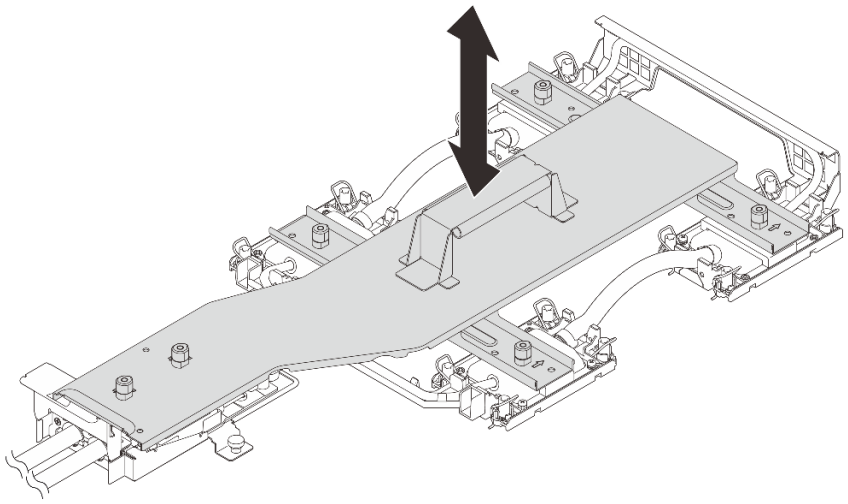

Figure 129. Removing cold plate carrier

Step 9. Install the cold plate covers.

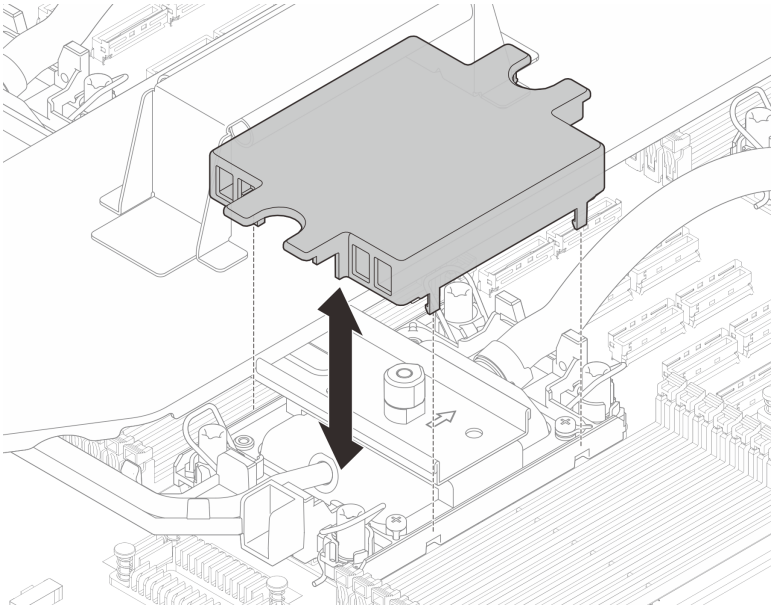

Figure 130. Installing cold plate covers

Step 10. Connect the leakage detection sensor module cable to the connector 1 on the system board assembly.

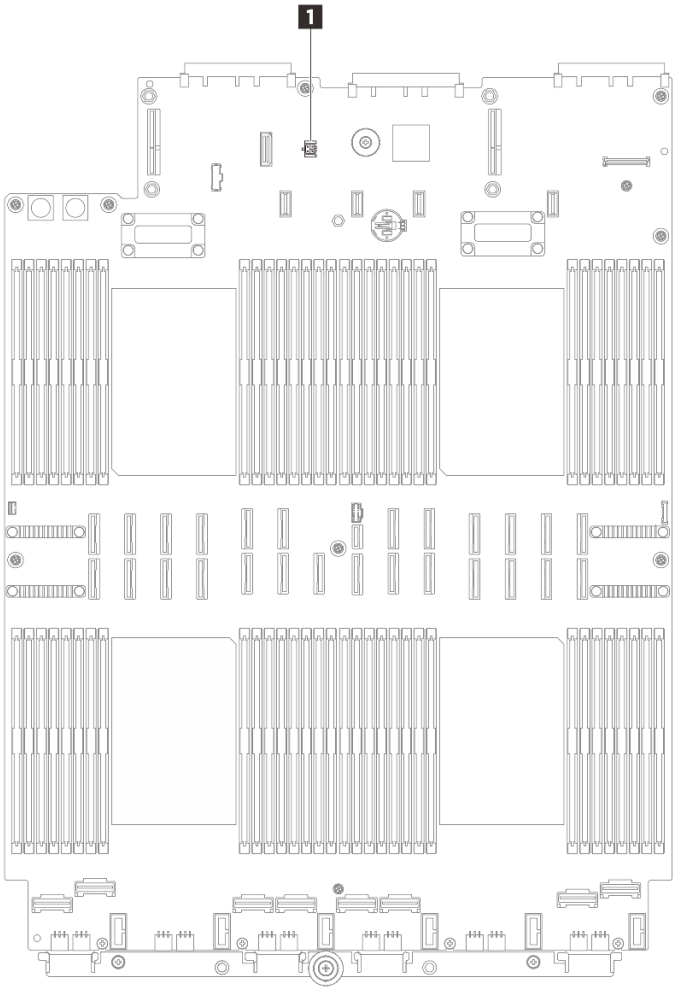

Figure 131. Connecting leakage detection sensor module

Step 11. Install the riser filler.

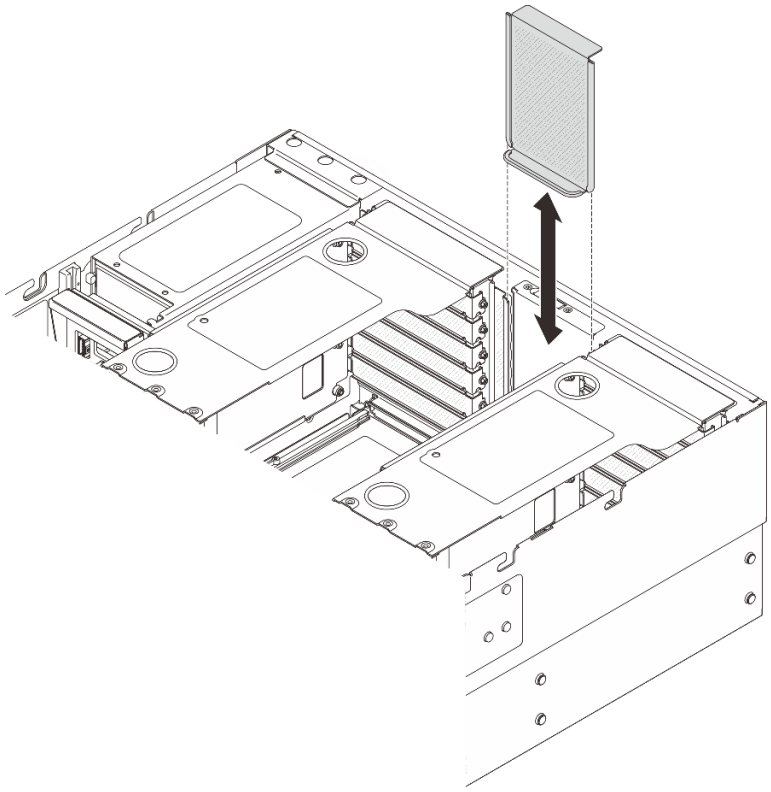

Figure 132. Installing riser filler

After you finish

1. Reinstall the memory modules. See “Install a memory module” on page 238.
2. Reinstall the rear air baffle. See “Install the rear air baffle” on page 115.
3. Reinstall the PCIe risers. See “Install the PCIe riser” on page 261.
4. Reinstall the crossbar. See “Install the crossbar” on page 128.
5. Reinstall the front air baffle. See “Install the front air baffle” on page 109.
6. Reinstall the fans and the fan cage. See “Install a fan” on page 155 and “Install the fan cage” on page 154.
7. Reinstall the rear top cover. See “Install the rear top cover” on page 373.
8. Reinstall the front top cover. See “Install the front top cover” on page 375.
9. Install the server into the rack. See “Server replacement” on page 67.
10. Install the quick connect plugs to the manifolds. See “Install the manifold (in-rack system)” on page 206 or “Install the manifold (in-row system)” on page 226.
11. Complete the parts replacement. See “Complete the parts replacement” on page 382.

Demo video

Watch the procedure on YouTube

Manifold replacement (trained technicians only)

Follow the instructions in this section to remove and install the manifolds.

Important: This task must be operated by trained technicians that are certified by Lenovo Service. Do not attempt to remove or install the part without proper training and qualification.

Contact Lenovo Professional Services team for help when installing the part for the first time.

The liquid runs through the cooling system is de-ionized water. For more information about the liquid, see "Water requirements" on page 12.

The server can be installed in the ThinkSystem Heavy Duty Full Depth Rack Cabinets. For ThinkSystem Heavy Duty Full Depth Rack Cabinets User Guide, see ThinkSystem Heavy Duty Full Depth Rack Cabinets User Guide.

For more operation and maintenance guidelines on Coolant Distribution Unit (CDU), see Lenovo Neptune DWC RM100 in-rack Coolant Distribution Unit (CDU) Operation & Maintenance Guide.

The illustrations below present the rear views of a rack cabinet; three sets of manifolds and three sets of connection hoses. There are two labels attached to the front of the manifolds, and one label on one end of each hose.

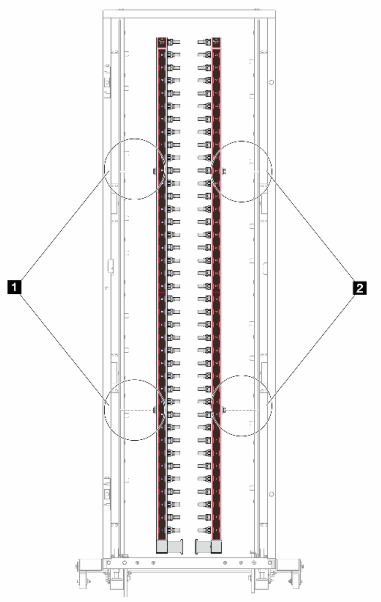

Figure 133. Manifolds in a 42U in-row system

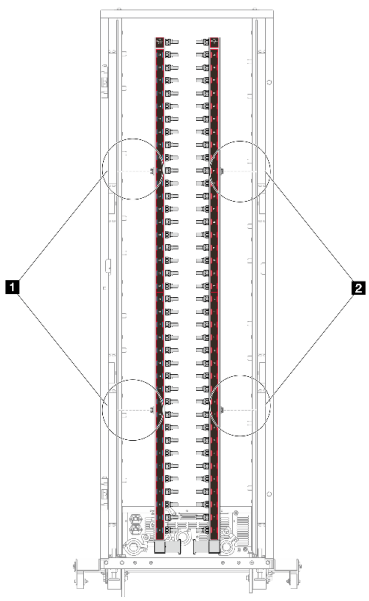

Figure 134. Manifolds in a 42U in-rack system

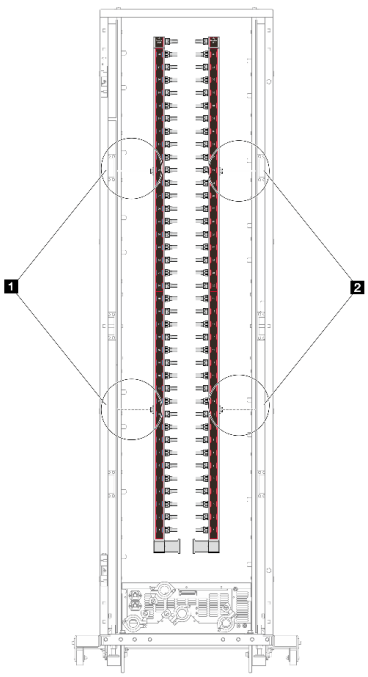

Figure 135. Manifolds in a 48U in-rack system

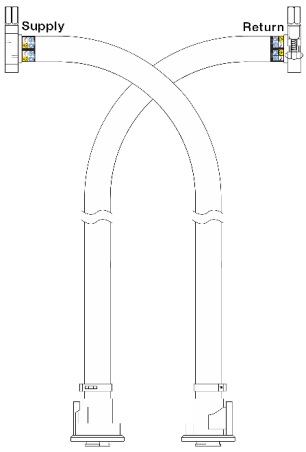

Figure 136. 42U in-row hose kit

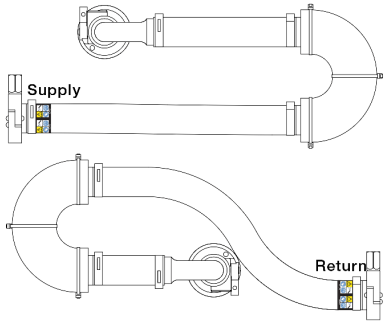

Figure 137. 42U in-rack connection set

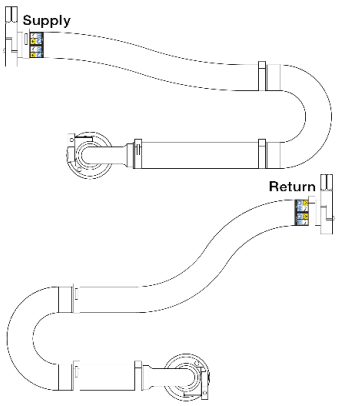

Figure 138. 48U in-rack connection set

1 Two left spools on supply manifold
2 Two right spools on return manifold

- “Remove the manifold (in-rack system)” on page 198
- “Install the manifold (in-rack system)” on page 206
- “Remove the manifold (in-row system)” on page 218
- “Install the manifold (in-row system)” on page 226

Remove the manifold (in-rack system)

Follow the instructions to remove the manifold in an in-rack direct water cooling system.

About this task

Important: This task must be operated by trained technicians that are certified by Lenovo Service. Do not attempt to remove or install the part without proper training and qualification.

CAUTION:
The liquid might cause irritation to the skin and eyes. Avoid direct contact with the liquid.

S002



CAUTION:
The power-control button on the device and the power switch on the power supply do not turn off the electrical current supplied to the device. The device also might have more than one power cord. To remove all electrical current from the device, ensure that all power cords are disconnected from the power source.

S011



CAUTION:
Sharp edges, corners, or joints nearby.

S038



CAUTION:
Eye protection should be worn for this procedure.

S040



CAUTION:
Protective gloves should be worn for this procedure.

S042



DANGER

Risk of electric shock due to water or a water solution which is present in this product. Avoid working on or near energized equipment with wet hands or when spilled water is present.

Attention:

- Read "Installation Guidelines" on page 45 and "Safety inspection checklist" on page 46 to ensure that you work safely.
- Power off the server and peripheral devices and disconnect the power cords and all external cables. See "Power off the server" on page 61.
- Prevent exposure to static electricity, which might lead to system halt and loss of data, by keeping static-sensitive components in their static-protective packages until installation, and handling these devices with an electrostatic-discharge wrist strap or other grounding system.
- Ensure proper handling procedures are followed when working with any chemically treated liquid used in the rack cooling system. Ensure that material safety data sheets (MSDS) and safety information are provided by the liquid chemical treatment supplier and that proper personal protective equipment (PPE) is available as recommended by the liquid chemical treatment supplier. Protective gloves and eyewear may be recommended as a precaution.
- This task requires two or more people.

Procedure

Note: Your server may differ from that shown in the illustrations, but the procedure is the same.

Step 1. Power off the in-rack CDU and disconnect all power cords.

Step 2. Close both ball valves.

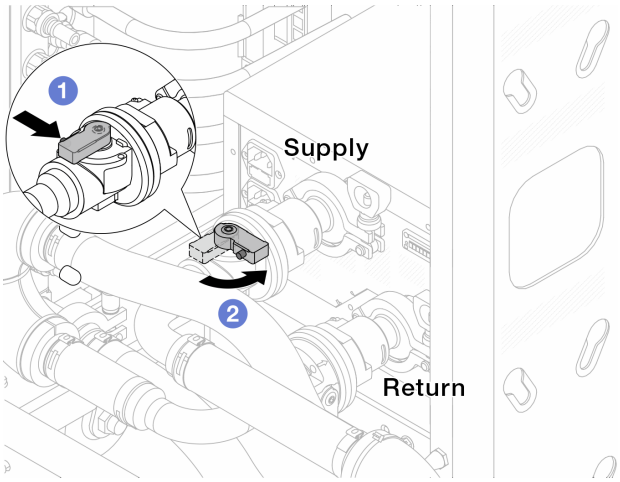

Figure 139. Closing ball valves

a. 1 Press the button on the ball valve switch.

b. 2 Rotate the switch to close the valves as illustrated above.

Step 3. Remove the quick connect plugs to separate the hoses of Processor Neptune® Core Module from the manifold.

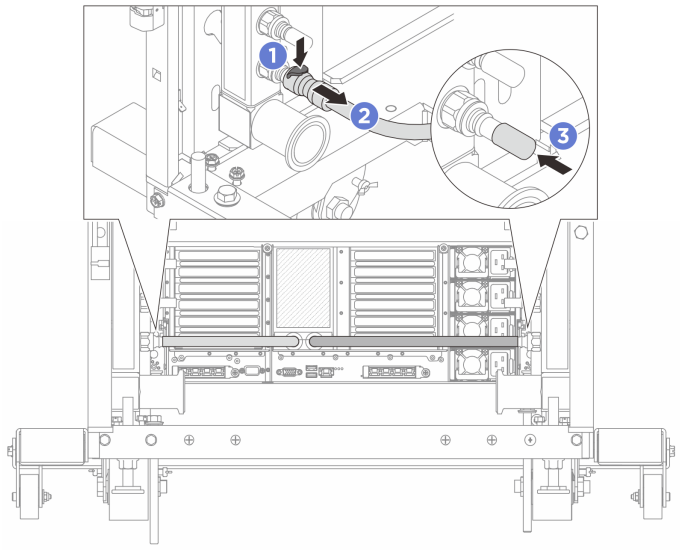

Figure 140. Quick connect plug removal

a. 1 Press the latch down to unlock the hose.
b. 2 Pull the hose off.
c. 3 Re-install the rubber quick connect plug covers to the ports on the manifold.

Step 4. Repeat Step 3 on page 200 to the other manifold.

Step 5. Disengage the connection set from ball valves.

Note: Disengage the return side first, then disengage the supply side.

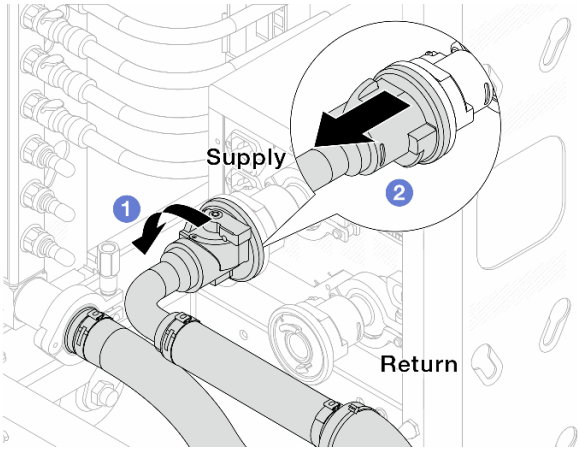

Figure 141. Removing the connection set

a. 1 Rotate the ball valve to the left.
b. 2 Pull the connection set off from ball valve.

Step 6. Remove the return manifold with the connection set attached.

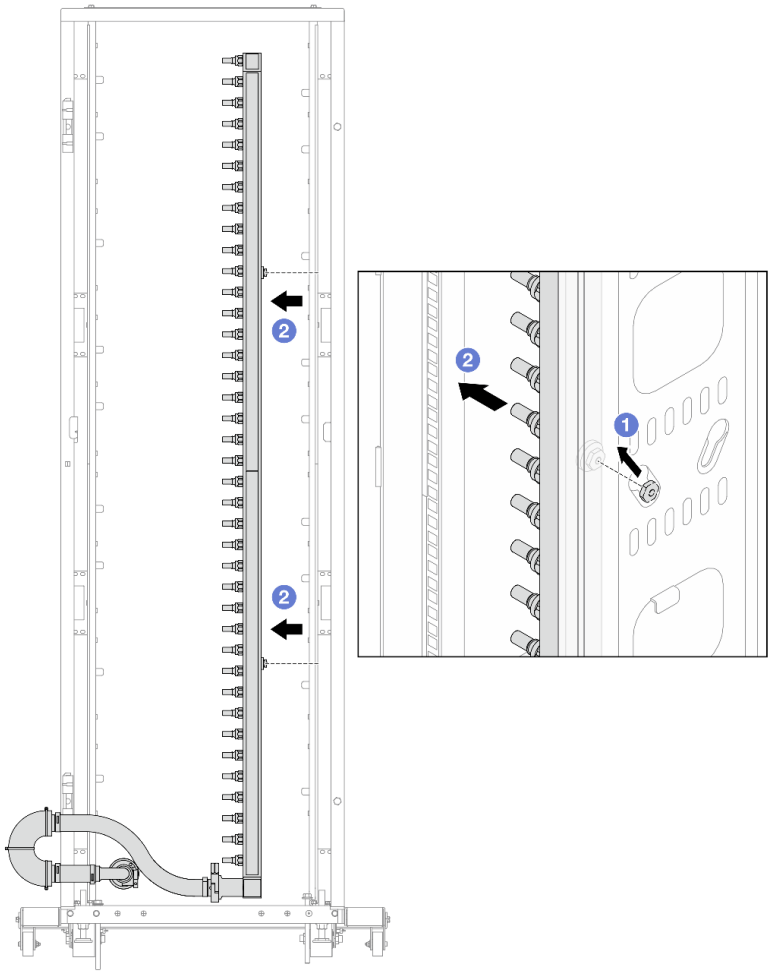

Figure 142. Removing the manifold

a. 1 Hold the manifold with both hands, and lift it upward to relocate the spools from the small openings to large ones on the rack cabinet.

b. 2 Remove the manifold with the connection set attached.

Step 7. Repeat Step 6 on page 201 to the supply manifold.

Notes:

- There is remaining liquid inside the manifold and the connection set. Remove both together and leave the further draining to the next step.
- For more information about the rack cabinet, see ThinkSystem Heavy Duty Full Depth Rack Cabinets User Guide.

Step 8. Install the bleeder kit to the manifold supply side.

Note: This step drains the liquid with the help of a pressure difference inside and outside the supply manifold.

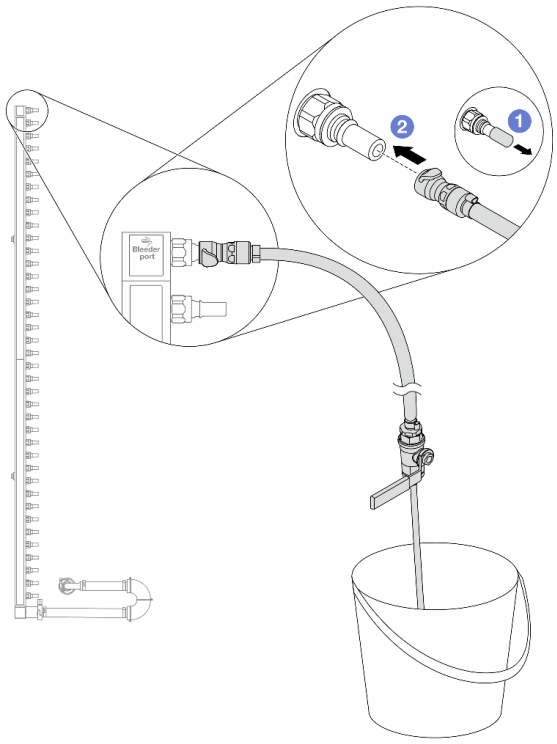

Figure 143. Installing the bleeder kit to the supply side

a. 1 Remove the rubber quick connect plug covers from the ports on the manifold.

b. 2 Plug the bleeder kit to the manifold.

Step 9. Slowly open the bleeder valve to allow a steady stream of coolant to drain. Close the bleeder valve once coolant stops flowing.

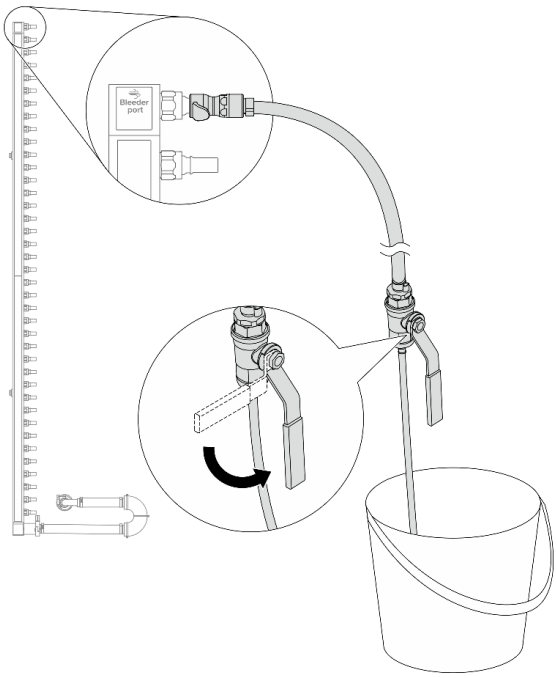

Figure 144. Opening the bleeder valve

Step 10. Install the bleeder kit to the manifold return side.

Note: This step drains the liquid with the help of a pressure difference inside and outside the return manifold.

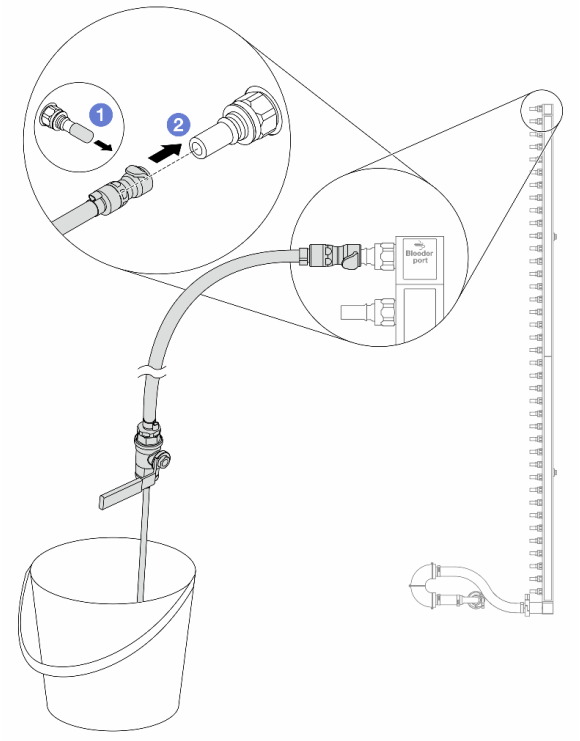

Figure 145. Installing the bleeder kit to the return side

a. 1 Remove the rubber quick connect plug covers from the ports on the manifold.

b. 2 Plug the bleeder kit to the manifold.

Step 11. Slowly open the bleeder valve to allow a steady stream of coolant to drain. Close the bleeder valve once coolant stops flowing.

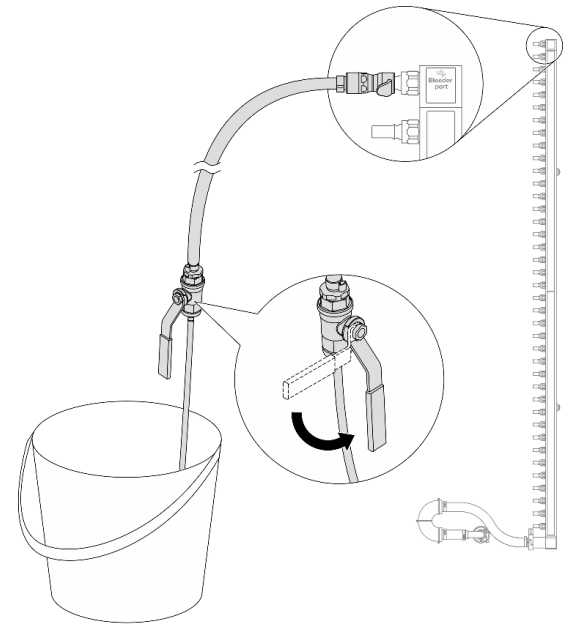

Figure 146. Opening the bleeder valve

Step 12. Separate the return manifold from the connection set in a dry and clean work area, and keep a bucket and absorbent cloths around to collect any liquid that may drain out.

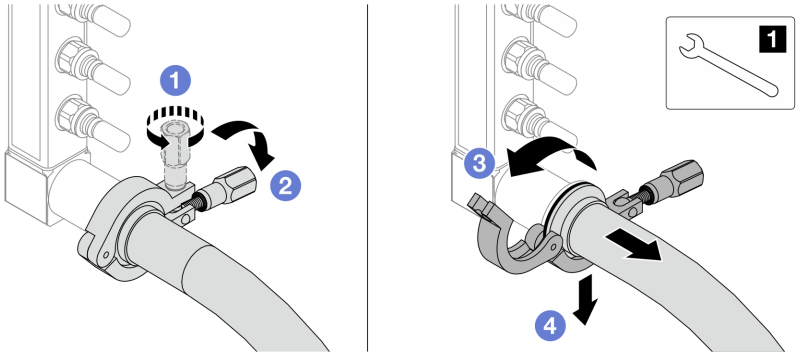

Figure 147. Separating the manifold from the connection set

1 17 mm wrench

a. 1 Loosen the screw that locks the ferrule.
b. 2 Put the screw down.
c. 3 Open the clamp.
d. 4 Remove the ferrule and connection set from the manifold.

Step 13. Repeat Step 12 on page 206 to the supply manifold.

Step 14. For better sanitation, keep the manifold ports and connection sets dry and clean. Re-install quick connect plug covers or any covers that protect connection sets and manifold ports.

Step 15. To remove the server from the rack, see “Server replacement” on page 67.

Step 16. To remove the Processor Neptune® Core Module, see “Remove the Lenovo Processor Neptune Core Module” on page 182.

After you finish

If you are instructed to return the component or optional device, follow all packaging instructions, and use any packaging materials for shipping that are supplied to you.

Demo video

Note: The parts shown in this video are for demonstration purposes only. Actual parts may differ in appearance.

Watch the procedure on YouTube

Install the manifold (in-rack system)

Follow the instructions to install the manifold in an in-rack direct water cooling system.

About this task

Important: This task must be operated by trained technicians that are certified by Lenovo Service. Do not attempt to remove or install the part without proper training and qualification.

CAUTION:

The liquid might cause irritation to the skin and eyes. Avoid direct contact with the liquid.

S002



CAUTION:
The power-control button on the device and the power switch on the power supply do not turn off the electrical current supplied to the device. The device also might have more than one power cord. To remove all electrical current from the device, ensure that all power cords are disconnected from the power source.

S011



CAUTION:
Sharp edges, corners, or joints nearby.

S038



CAUTION:
Eye protection should be worn for this procedure.

S040



CAUTION:
Protective gloves should be worn for this procedure.

S042



DANGER

Risk of electric shock due to water or a water solution which is present in this product. Avoid working on or near energized equipment with wet hands or when spilled water is present.

Attention:

- Read "Installation Guidelines" on page 45 and "Safety inspection checklist" on page 46 to ensure that you work safely.
- Power off the server and peripheral devices and disconnect the power cords and all external cables. See "Power off the server" on page 61.
- Prevent exposure to static electricity, which might lead to system halt and loss of data, by keeping static-sensitive components in their static-protective packages until installation, and handling these devices with an electrostatic-discharge wrist strap or other grounding system.
- Ensure proper handling procedures are followed when working with any chemically treated liquid used in the rack cooling system. Ensure that material safety data sheets (MSDS) and safety information are provided by the liquid chemical treatment supplier and that proper personal protective equipment (PPE) is available as recommended by the liquid chemical treatment supplier. Protective gloves and eyewear may be recommended as a precaution.
- This task requires two or more people.

Procedure

Note: Your server may differ from that shown in the illustrations, but the procedure is the same.

Step 1. Make sure that the in-rack CDU and other devices are not powered on, and that all external cables are disconnected.

Step 2. To install the Processor Neptune® Core Module, see "Install the Lenovo Processor Neptune Core Module" on page 188.

Step 3. To install the server into the rack, see "Server replacement" on page 67.

Step 4. Install the manifold.

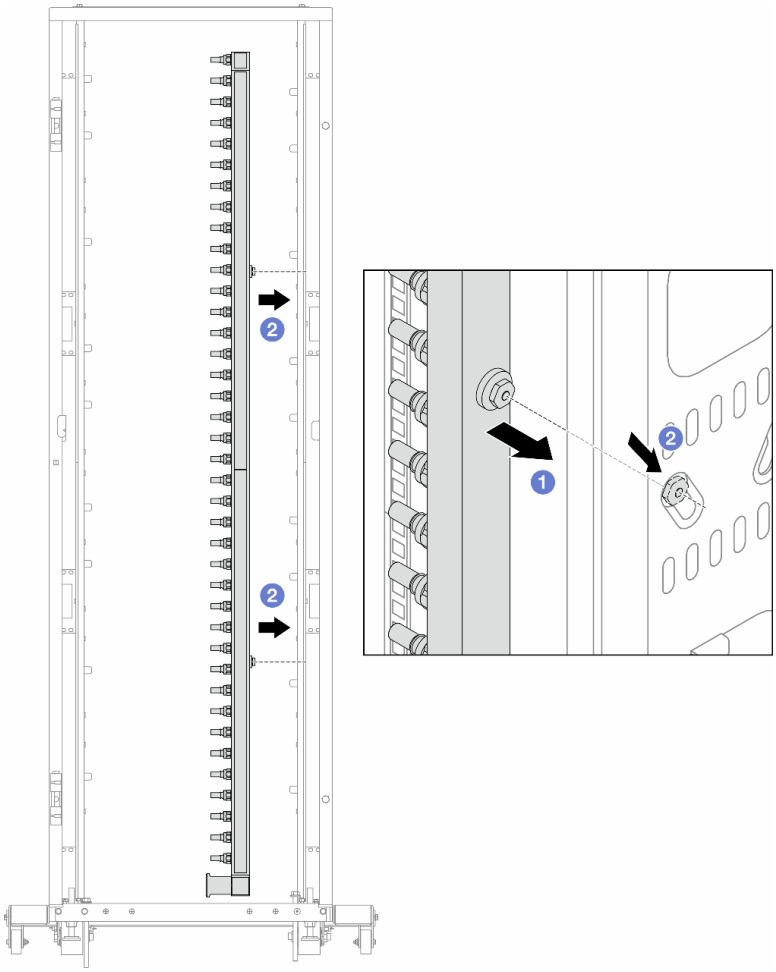

Figure 148. Installing the manifold

a. (1) Hold the manifold with both hands, and mount it onto the rack cabinet.

b. (2) Align the spools with holes, and clutch the cabinet.

Note: For more information about the rack cabinet, see ThinkSystem Heavy Duty Full Depth Rack Cabinets User Guide.

Step 5. Repeat Step 4 on page 208 to the other manifold.

Step 6. Separate ball valves from connection sets.

Note: One end of a connection set comes with a detachable ball valve, and the two parts are connected by a ferrule. Remove the ferrule to separate the ball valve that is bound for CDU in Step 7 on page 210.

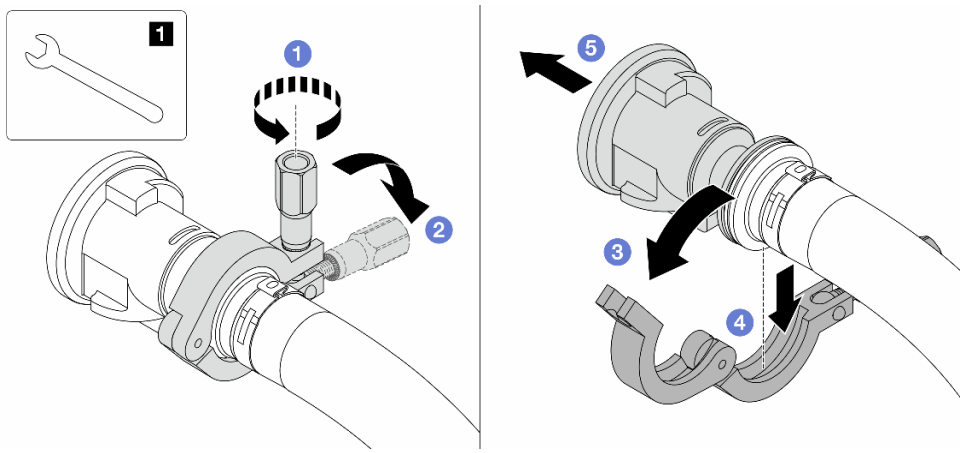

Figure 149. Separating ball valves

1	17 mm wrench

a. 1 Loosen the screw that locks the ferrule.
b. 2 Put the screw down.
c. 3 Open the clamp.
d. 4 Remove the ferrule.
e. 5 Remove the ball valve from connection set.

Step 7. Install ball valves to CDU.

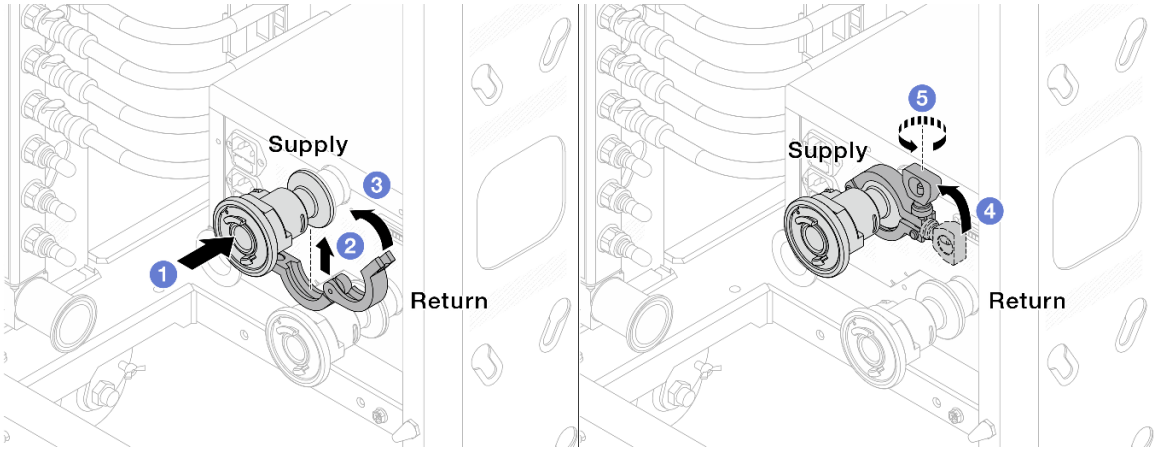

Figure 150. Installing ball valves

a. 1 Connect the ball valves to **Supply** and **Return** ports.
b. 2 Wrap the interface around with the clamp.
c. 3 Close the clamp.
d. 4 Lift the screw upright.
e. 5 Tighten the screw and make sure that it is secured.

Step 8. Install the connection set to manifolds.

Note: Install the supply side first, then install the return side.

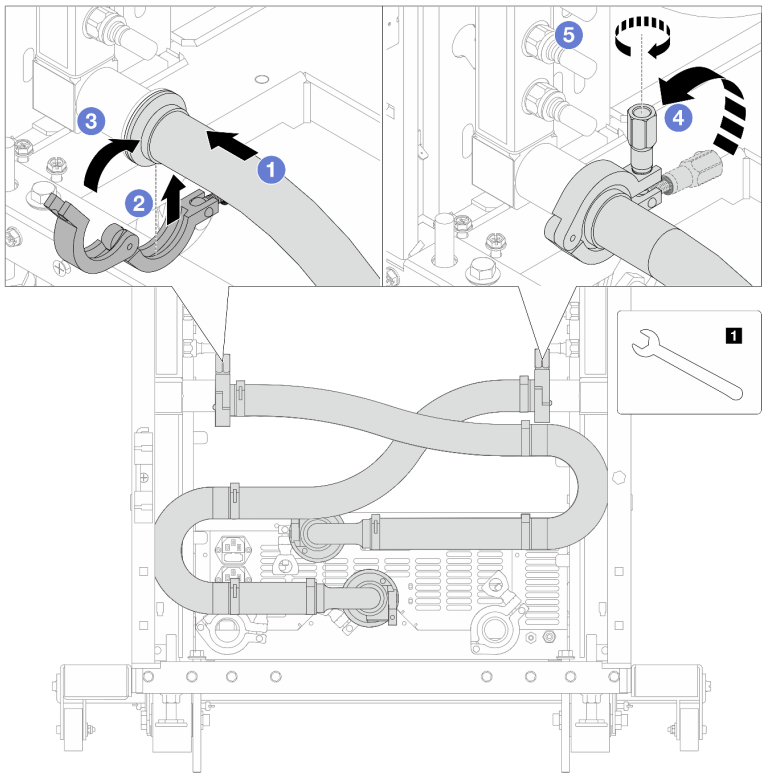

Figure 151. Installing the connection set

1 17 mm wrench

a. 1 Connect the connection set to both manifolds.
b. 2 Wrap the interface around with the clamp.
c. 3 Close the clamp.
d. 4 Lift the screw upright.
e. 5 Tighten the screw and make sure that it is secured.

Step 9. Install the connection set to ball valves.

Note: Install the supply side first, then install the return side.

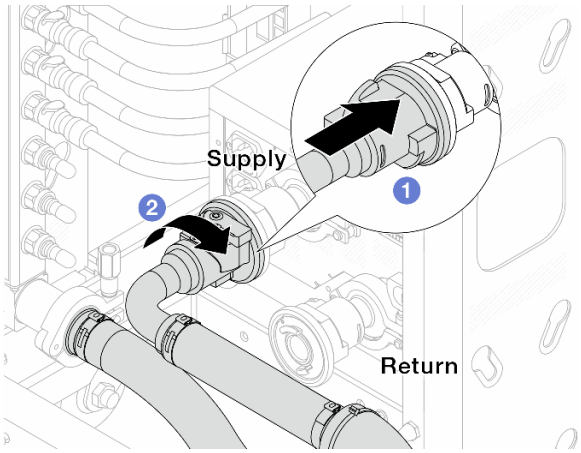

Figure 152. Connecting ball valves

a. 1 Connect ball valves.
b. 2 Rotate to the right to lock the two valves.

Step 10. Prepare the in-rack CDU.

a. Connect the feed hose to inlet port on the front.

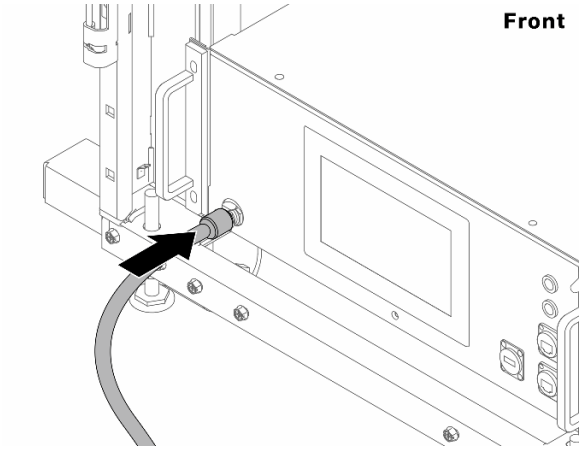

Figure 153. The front of CDU

b. Connect hoses to the drain port and bleeder port on the rear.

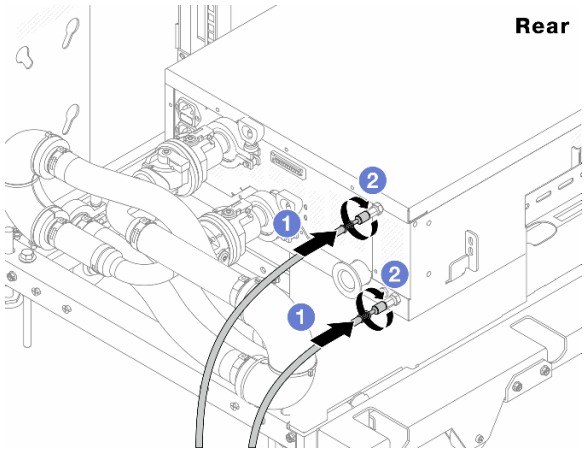

Figure 154. The rear of CDU

1. Connect both drain and bleeder hoses to CDU.
2. Rotate the connectors to the right to secure the connection.

Important:

- For more operation and maintenance guidelines, see Lenovo Neptune DWC RM100 in-rack liquid Distribution Unit (CDU) Operation & Maintenance Guide.
- For service support, associated warranty and maintenance sizing, contact Lenovo Professional Services team at cdusupport@lenovo.com.

Step 11. Install the quick connect plug to the manifolds.

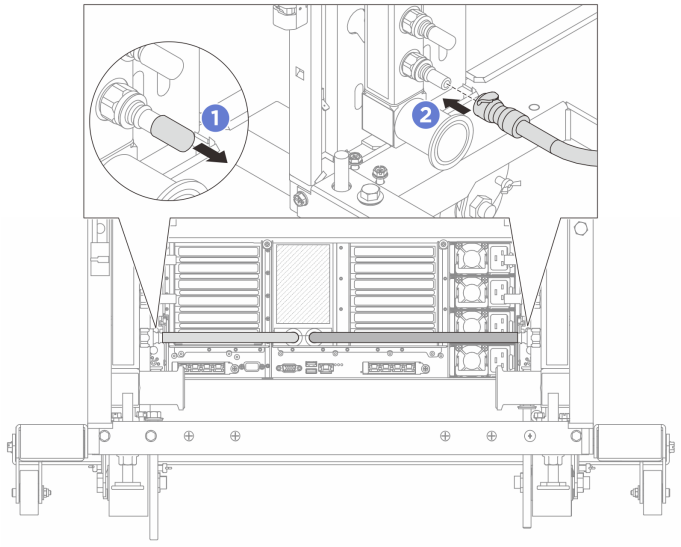

Figure 155. Installing the quick connect plug

a. 1 Remove the rubber quick connect plug covers from the ports on the manifold.

b. 2 Connect the plug to the manifold port.

Step 12. Install the bleeder kit to the manifold supply side.

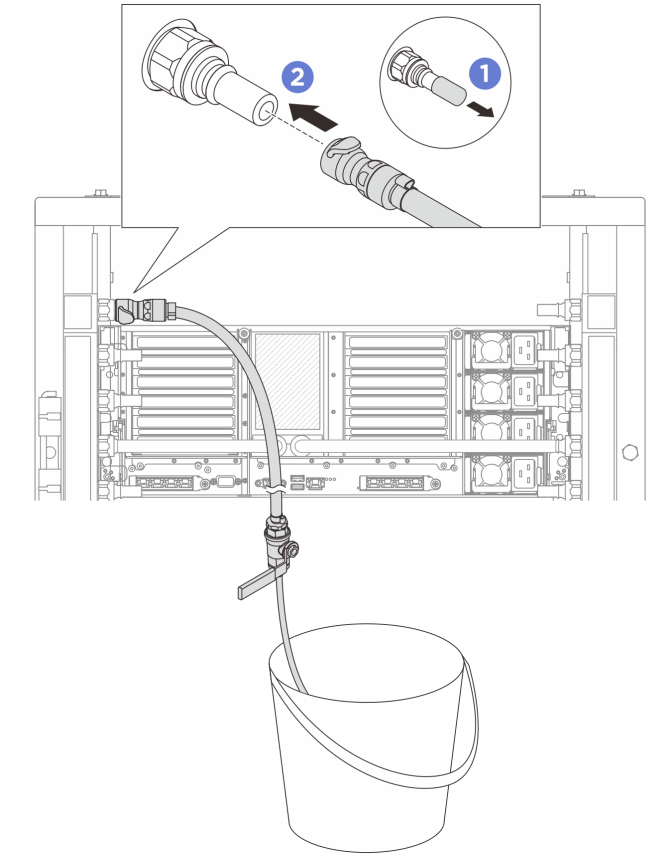

Figure 156. Installing the bleeder kit to the supply side

a. 1 Remove the rubber quick connect plug covers from the ports on the manifold.

b. 2 Plug the bleeder kit to the manifold.

Step 13. To push the air out of the manifolds, open ball valve switches to let liquid fill the system.

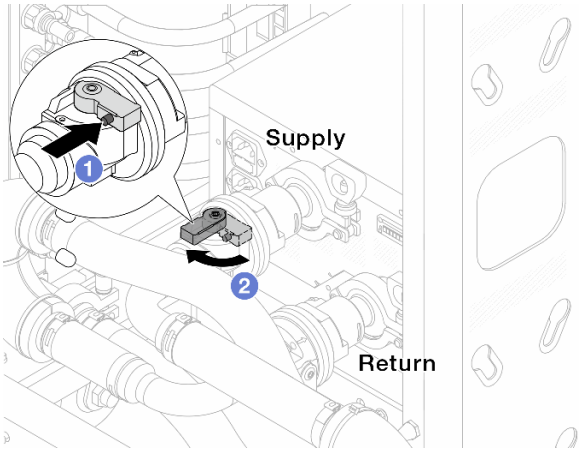

Figure 157. Opening ball valves

a. 1 Press the button on the ball valve switch.

b. 2 Rotate the switch to fully open the valves as illustrated above.

Attention:

- Pay close attention to the front display of CDU and maintain the system pressure at **one bar**.
- For more information about liquid temperature and system pressure requirements, see “Water requirements” on page 12.

Step 14. Slowly open the bleeder valve to conduct the air out of the hose. Close the bleeder valve once a steady stream of water flows into the bucket or there are only minimal bubbles in the bleeder hose.

Figure 158. Opening the bleeder valve on the supply side

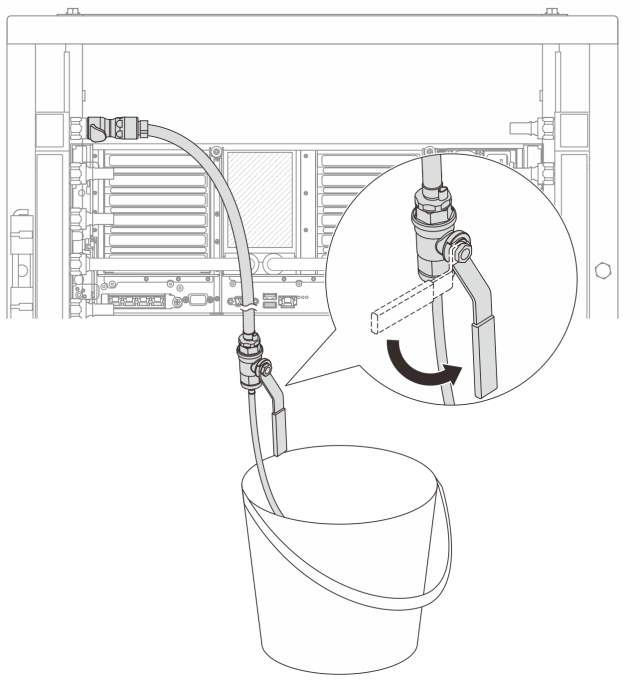

Step 15. Install the bleeder kit to the manifold return side.

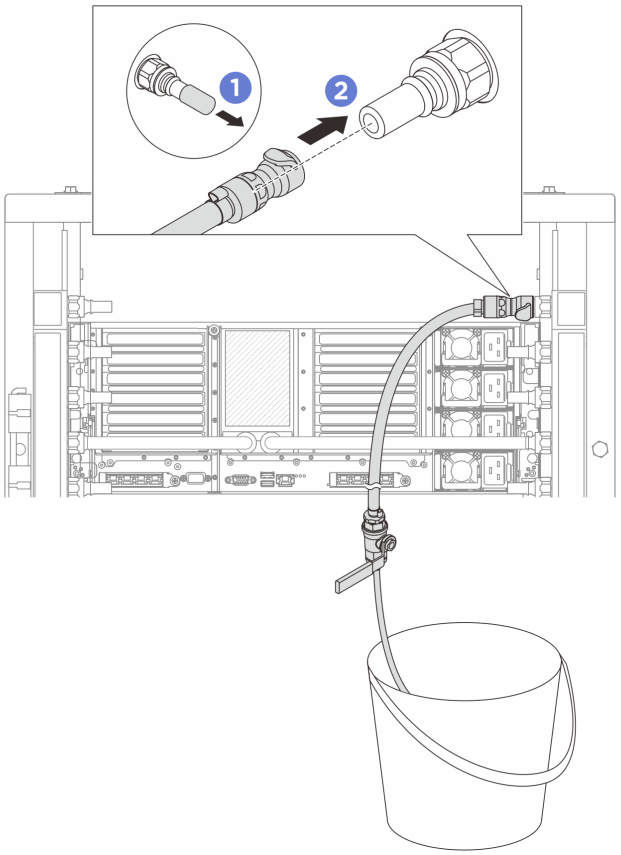

Figure 159. Installing the bleeder kit on the return side

a. 1 Remove the rubber quick connect plug covers from the ports on the manifold.

b. 2 Plug the bleeder kit to the manifold.

Step 16. Slowly open the bleeder valve to conduct the air out of the hose. Close the bleeder valve once a steady stream of water flows into the bucket or there are only minimal bubbles in the bleeder hose.

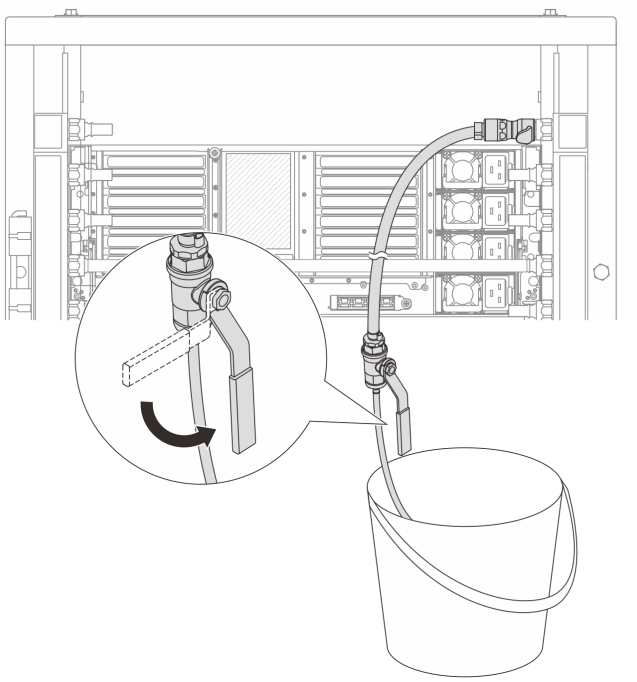

Figure 160. Opening the bleeder valve on the return side

Step 17. (For precaution) To make sure that the air inside is as little as possible, re-install the bleeder kit back to manifold supply side and do it one more time. Close the bleeder valve once a steady stream of water flows into the bucket or there are only minimal bubbles in the bleeder hose.

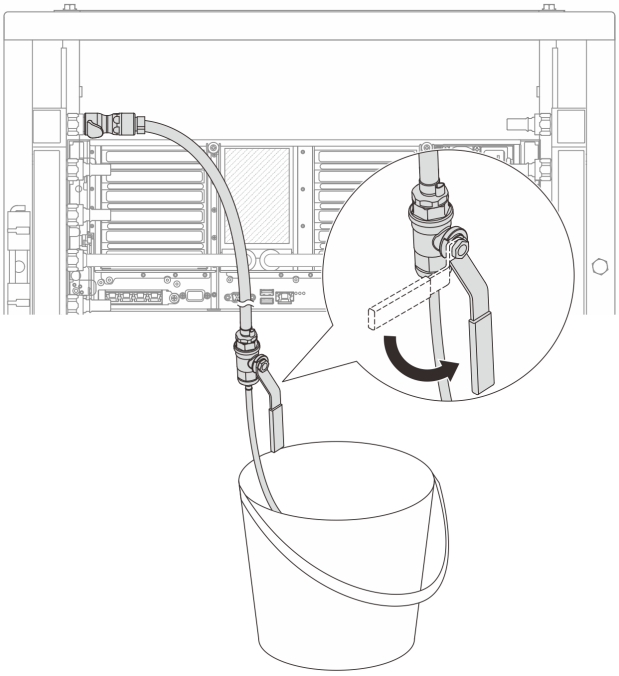

Figure 161. Opening the bleeder valve on the supply side

Step 18. Once completed, pay close attention to the front display of CDU and maintain the system pressure at **one bar**. For more information about liquid temperature and system pressure requirements, see "Water requirements" on page 12.

After you finish

Complete the parts replacement. See "Complete the parts replacement" on page 382.

Demo video

Note: The parts shown in this video are for demonstration purposes only. Actual parts may differ in appearance.

Watch the procedure on YouTube

Remove the manifold (in-row system)

Follow the instructions to remove the manifold in an in-row direct water cooling system.

About this task

Important: This task must be operated by trained technicians that are certified by Lenovo Service. Do not attempt to remove or install the part without proper training and qualification.

CAUTION:
The liquid might cause irritation to the skin and eyes. Avoid direct contact with the liquid.

S002

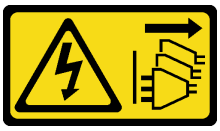

CAUTION:
The power-control button on the device and the power switch on the power supply do not turn off the electrical current supplied to the device. The device also might have more than one power cord. To remove all electrical current from the device, ensure that all power cords are disconnected from the power source.

S011



CAUTION:
Sharp edges, corners, or joints nearby.

S038



CAUTION:
Eye protection should be worn for this procedure.

S040



CAUTION:
Protective gloves should be worn for this procedure.

S042



DANGER

Risk of electric shock due to water or a water solution which is present in this product. Avoid working on or near energized equipment with wet hands or when spilled water is present.

Attention:

- Read “Installation Guidelines” on page 45 and “Safety inspection checklist” on page 46 to ensure that you work safely.
- Power off the server and peripheral devices and disconnect the power cords and all external cables. See “Power off the server” on page 61.
- Prevent exposure to static electricity, which might lead to system halt and loss of data, by keeping static-sensitive components in their static-protective packages until installation, and handling these devices with an electrostatic-discharge wrist strap or other grounding system.
- Ensure proper handling procedures are followed when working with any chemically treated liquid used in the rack cooling system. Ensure that material safety data sheets (MSDS) and safety information are provided by the liquid chemical treatment supplier and that proper personal protective equipment (PPE) is available as recommended by the liquid chemical treatment supplier. Protective gloves and eyewear may be recommended as a precaution.
- This task requires two or more people.

Procedure

Note: Your server may differ from that shown in the illustrations, but the procedure is the same.

Step 1. Close both ball valves.

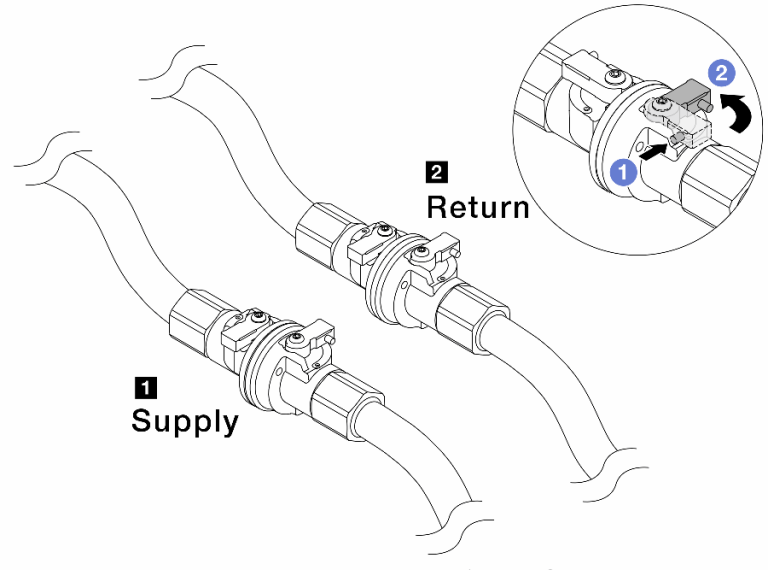

Figure 162. Closing ball valves

Note:

1 Manifold supply connects to facility supply	**2 Manifold return connects to facility return**

a. 1 Press the button on the ball valve switch.

b. 2 Rotate the switches to close the valves as illustrated above.

Step 2. Remove the quick connect plugs to separate the hoses of Processor Neptune® Core Module from the manifold.

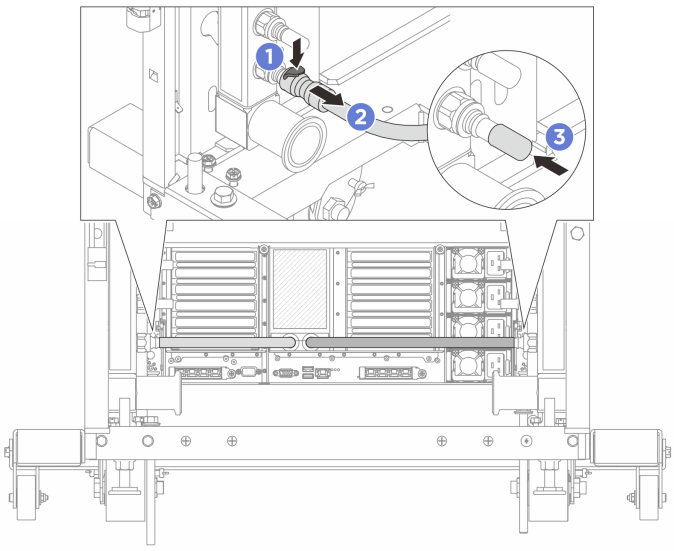

Figure 163. Quick connect plug removal

a. 1 Press the latch down to unlock the hose.

b. 2 Pull the hose off.

c. (3) Re-install the rubber quick connect plug covers to the ports on the manifold.

Step 3. Repeat Step 2 on page 220 to the other manifold.

Step 4. Remove the manifold with the hose kit attached.

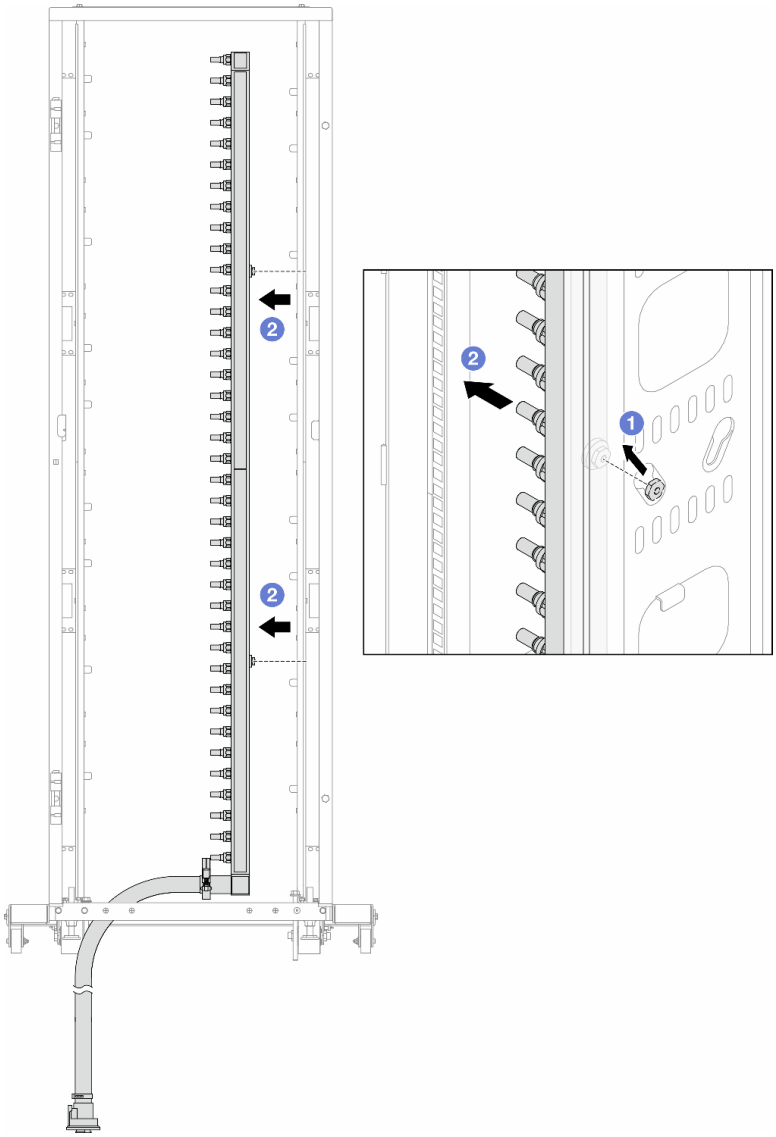

Figure 164. Removing the manifold

a. (1) Hold the manifold with both hands, and lift it upward to relocate the spools from the small openings to large ones on the rack cabinet.

b. (2) Remove the manifold with the hose kit attached.

Step 5. Repeat Step 4 on page 221 to the other manifold.

Notes:

- There is remaining liquid inside the manifold and the hose kit. Remove both together and leave the further draining to the next step.
- For more information about the rack cabinet, see ThinkSystem Heavy Duty Full Depth Rack Cabinets User Guide.

Step 6. Install the bleeder kit to the manifold supply side.

Note: This step drains the liquid with the help of a pressure difference inside and outside the supply manifold.

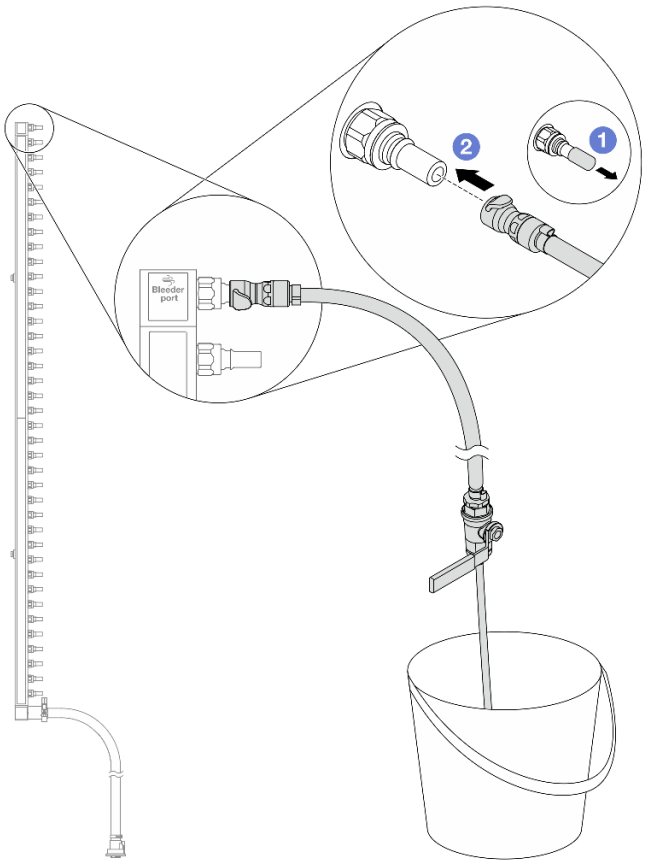

Figure 165. Installing the bleeder kit to the supply side

a. 1 Remove the rubber quick connect plug covers from the ports on the manifold.

b. 2 Plug the bleeder kit to the manifold.

Step 7. Slowly open the bleeder valve to allow a steady stream of coolant to drain. Close the bleeder valve once coolant stops flowing.

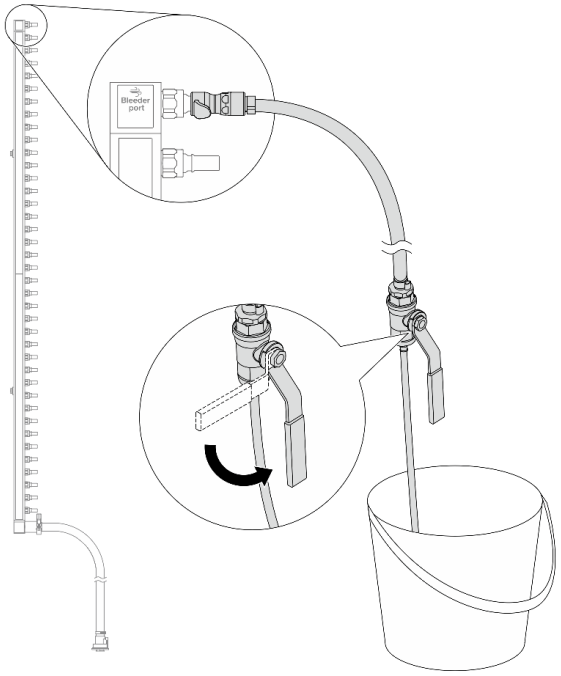

Figure 166. Opening the bleeder valve

Step 8. Install the bleeder kit to the manifold return side.

Note: This step drains the liquid with the help of a pressure difference inside and outside the return manifold.

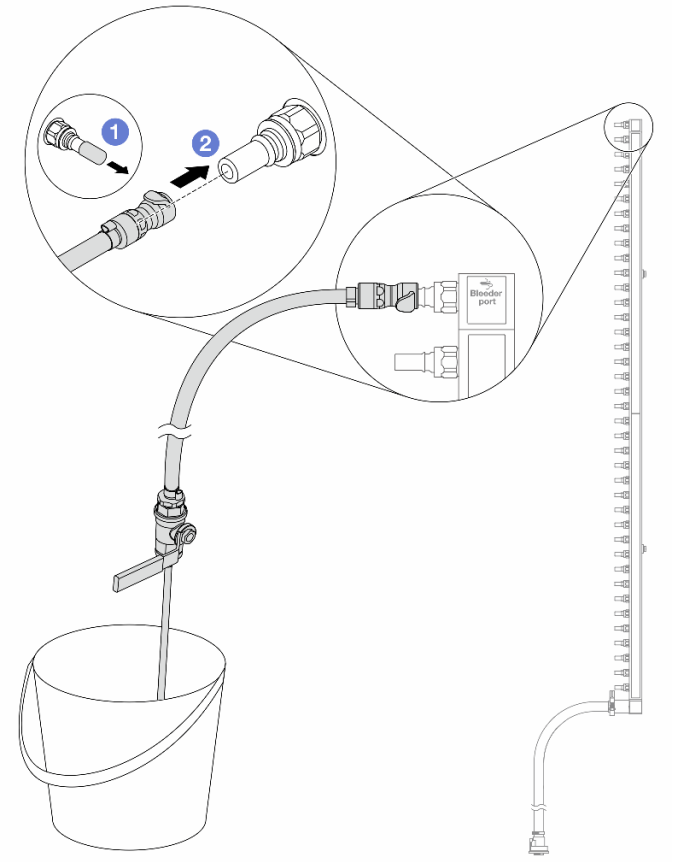

Figure 167. Installing the bleeder kit to the return side

a. 1 Remove the rubber quick connect plug covers from the ports on the manifold.

b. 2 Plug the bleeder kit to the manifold.

Step 9. Slowly open the bleeder valve to allow a steady stream of coolant to drain. Close the bleeder valve once coolant stops flowing.

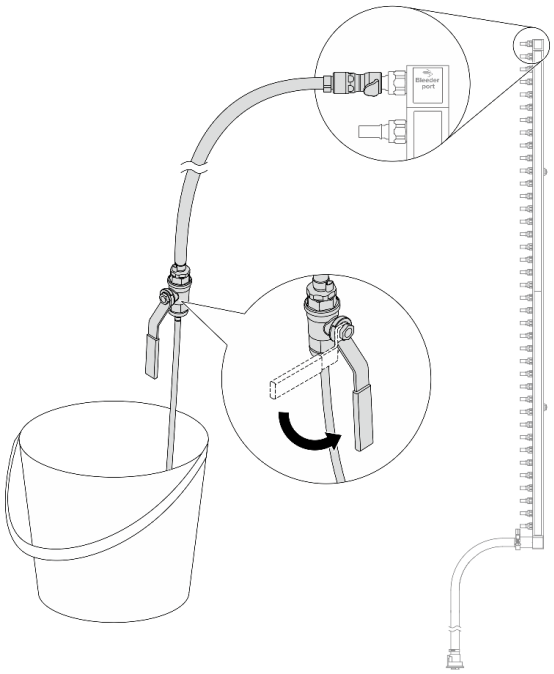

Figure 168. Opening the bleeder valve

Step 10. Separate the manifold from the hose kit in a dry and clean work area, and keep a bucket and absorbent cloths around to collect any liquid that may drain out.

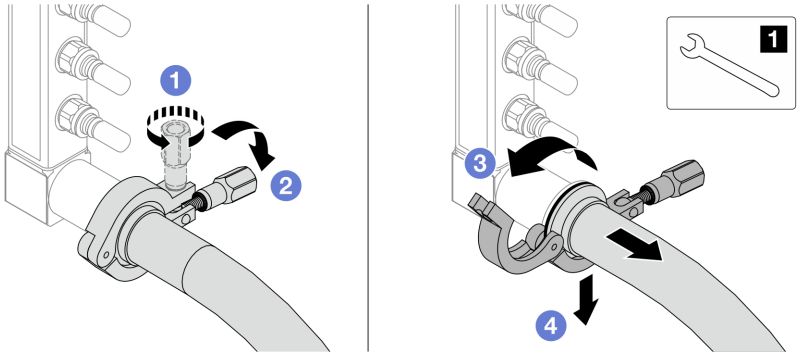

Figure 169. Separating the manifold from the hose kit

1 17 mm wrench

a. 1 Loosen the screw that locks the ferrule.
b. 2 Put the screw down.
c. 3 Open the clamp.
d. 4 Remove the ferrule and hose kit from the manifold.

Step 11. Repeat Step 10 on page 225 to the other manifold.

Step 12. For better sanitation, keep the manifold ports and hose kits dry and clean. Re-install quick connect plug covers or any covers that protect hose kits and manifold ports.

Step 13. To remove the server from the rack, see “Server replacement” on page 67.

Step 14. To remove the Processor Neptune® Core Module, see “Remove the Lenovo Processor Neptune Core Module” on page 182.

After you finish

If you are instructed to return the component or optional device, follow all packaging instructions, and use any packaging materials for shipping that are supplied to you.

Demo video

Note: The parts shown in this video are for demonstration purposes only. Actual parts may differ in appearance.

Watch the procedure on YouTube

Install the manifold (in-row system)

Follow the instructions to install the manifold in an in-row direct water cooling system.

About this task

Important: This task must be operated by trained technicians that are certified by Lenovo Service. Do not attempt to remove or install the part without proper training and qualification.

CAUTION:
The liquid might cause irritation to the skin and eyes. Avoid direct contact with the liquid.

S002

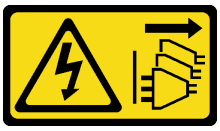

CAUTION:
The power-control button on the device and the power switch on the power supply do not turn off the electrical current supplied to the device. The device also might have more than one power cord. To remove all electrical current from the device, ensure that all power cords are disconnected from the power source.

S011



CAUTION:
Sharp edges, corners, or joints nearby.

S038



CAUTION:
Eye protection should be worn for this procedure.

S040



CAUTION:
Protective gloves should be worn for this procedure.

S042



DANGER

Risk of electric shock due to water or a water solution which is present in this product. Avoid working on or near energized equipment with wet hands or when spilled water is present.

Attention:

- Read “Installation Guidelines” on page 45 and “Safety inspection checklist” on page 46 to ensure that you work safely.
- Power off the server and peripheral devices and disconnect the power cords and all external cables. See “Power off the server” on page 61.
- Prevent exposure to static electricity, which might lead to system halt and loss of data, by keeping static-sensitive components in their static-protective packages until installation, and handling these devices with an electrostatic-discharge wrist strap or other grounding system.
- Ensure proper handling procedures are followed when working with any chemically treated liquid used in the rack cooling system. Ensure that material safety data sheets (MSDS) and safety information are provided by the liquid chemical treatment supplier and that proper personal protective equipment (PPE) is available as recommended by the liquid chemical treatment supplier. Protective gloves and eyewear may be recommended as a precaution.
- This task requires two or more people.

Procedure

Note: Your server may differ from that shown in the illustrations, but the procedure is the same.

Step 1. To install the Processor Neptune® Core Module, see “Install the Lenovo Processor Neptune Core Module” on page 188.

Step 2. To install the server into the rack, see “Server replacement” on page 67.

Step 3. Install the manifold.

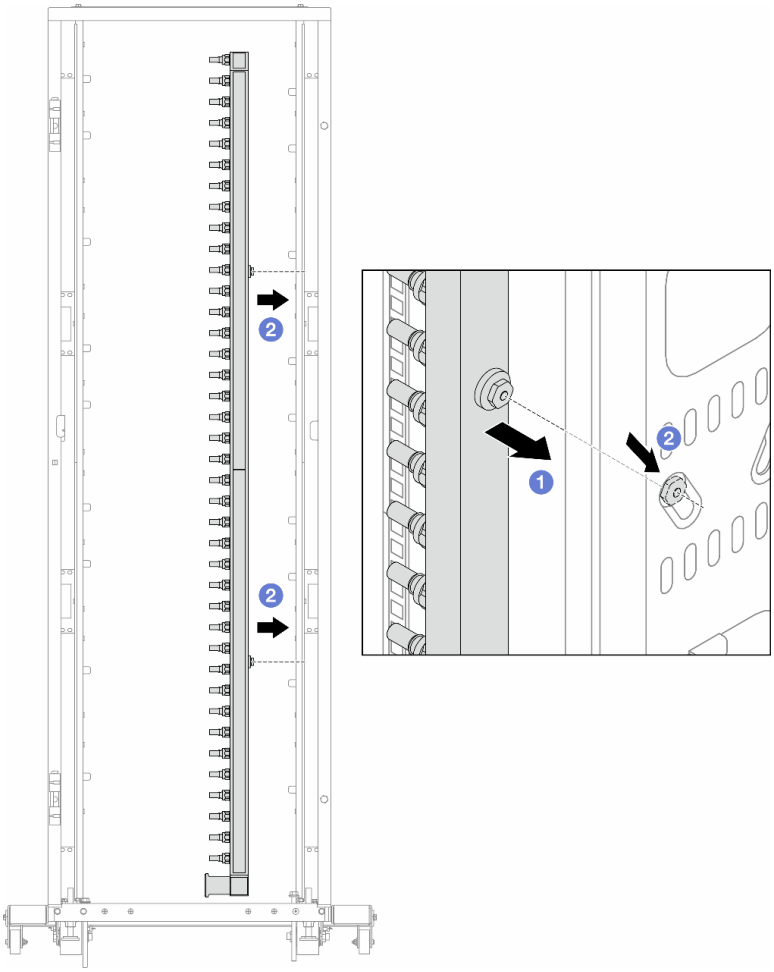

Figure 170. Installing the manifold

a. 1 Hold the manifold with both hands, and mount it onto the rack cabinet.

b. 2 Align the spools with holes, and clutch the cabinet.

Note: For more information about the rack cabinet, see ThinkSystem Heavy Duty Full Depth Rack Cabinets User Guide.

Step 4. Repeat Step 3 on page 227 to the other manifold.

Step 5. Install the quick connect plug to the manifolds.

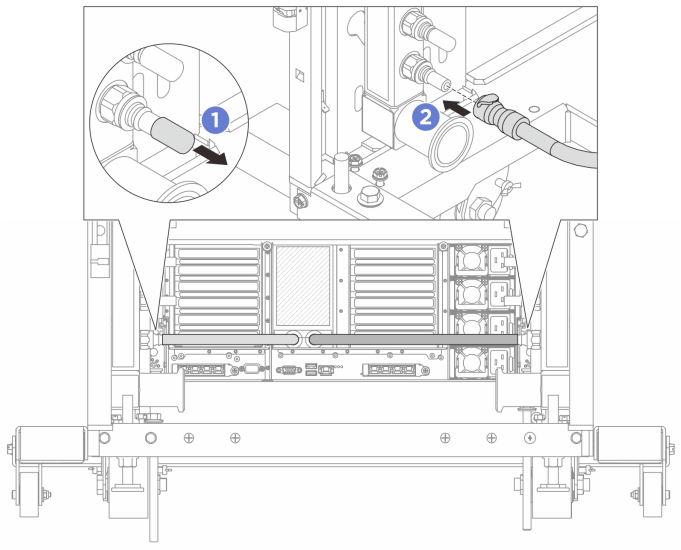

Figure 171. Installing the quick connect plug

a. 1 Remove the rubber quick connect plug covers from the ports on the manifold.

b. 2 Connect the plug to the manifold port.

Step 6. Install the hose kit to the manifold.

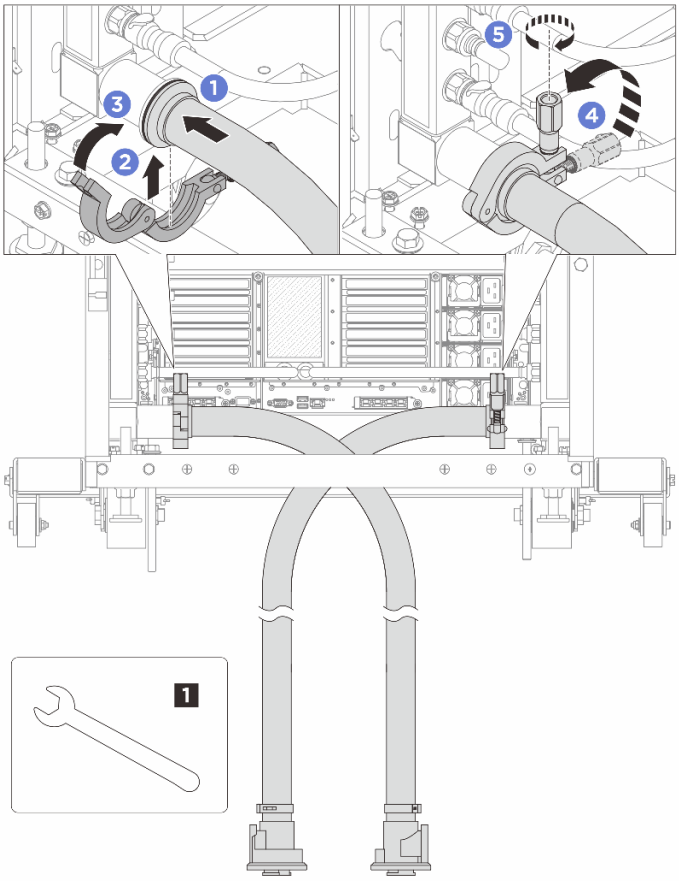

Figure 172. Installing the hose kit

1 17 mm wrench

a. 1 Connect the hose kits to both manifolds.
b. 2 Wrap the interface around with the clamp.
c. 3 Close the clamp.
d. 4 Lift the screw upright.
e. 5 Tighten the screw and make sure that it is secured.

Step 7. Install the bleeder kit to the manifold supply side.

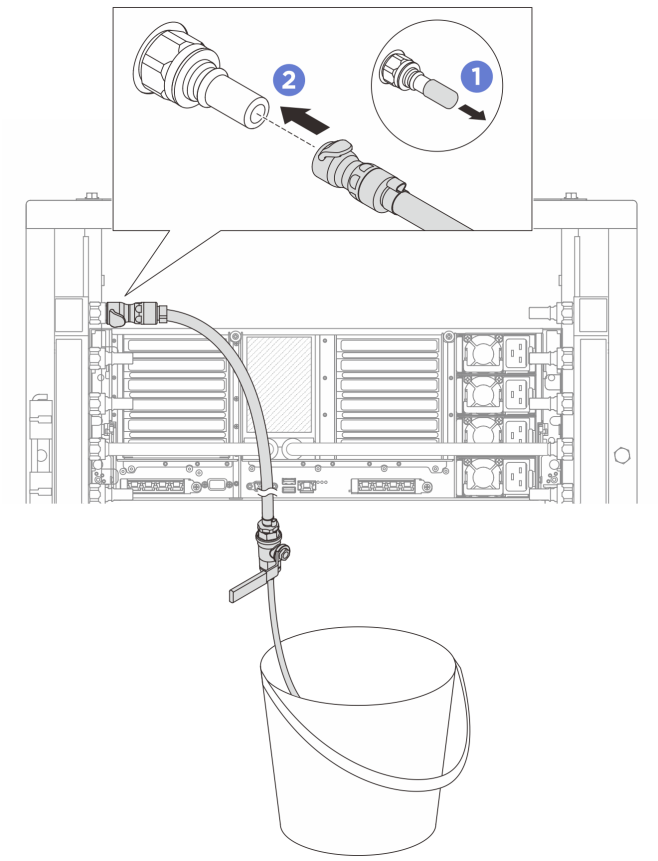

Figure 173. Installing the bleeder kit to the supply side

a. (1) Remove the rubber quick connect plug covers from the ports on the manifold.

b. (2) Plug the bleeder kit to the manifold.

Step 8. To push the air out of the manifold supply side, connect **facility supply** to **manifold return**.

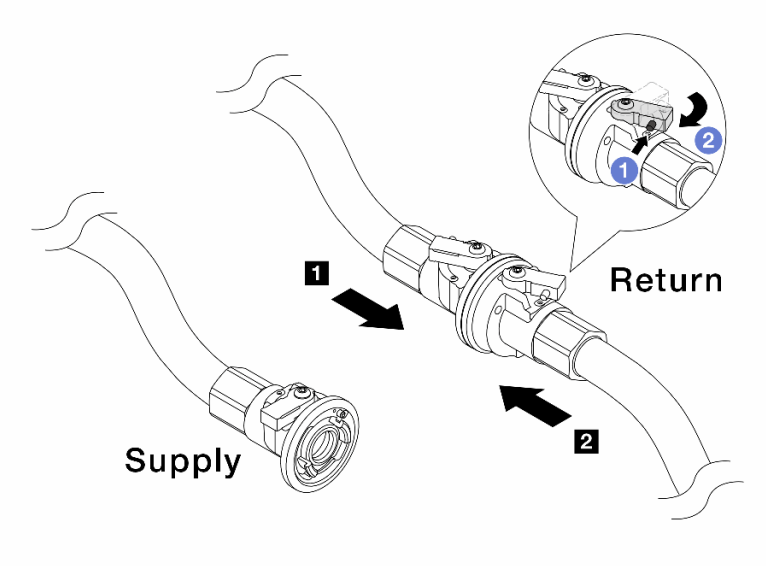

Figure 174. Facility supply to manifold return

a. 1 Press the button on the ball valve switch.

b. 2 Rotate both switches open and stop at around 1/4 of 90 degrees.

Attention:

- Open the ball valves on 1 manifold return side and 2 facility supply side, while keep manifold supply side closed.
- Do not fully open the ball valves, or the water flow gets too rapid to contain.

Step 9. Slowly open the bleeder valve to conduct the air out of the hose. Close the bleeder valve once a steady stream of water flows into the bucket or there are only minimal bubbles in the bleeder hose.

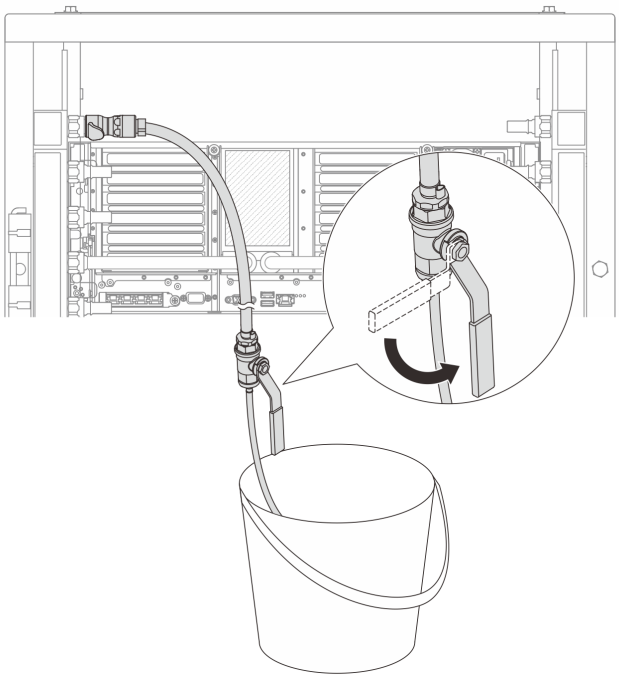

Figure 175. Opening the bleeder valve on the supply side

Step 10. Install the bleeder kit to the manifold return side.

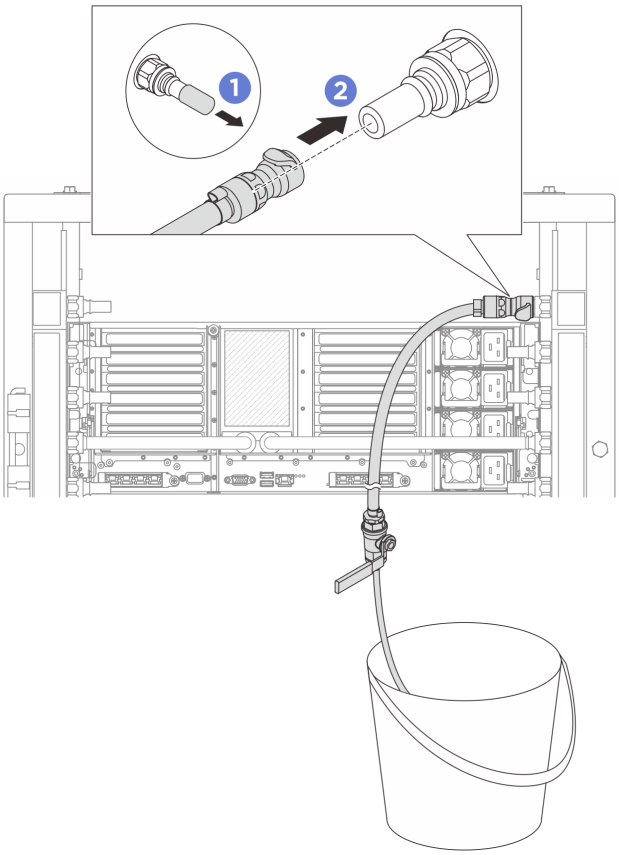

Figure 176. Installing the bleeder kit on the return side

a. 1 Remove the rubber quick connect plug covers from the ports on the manifold.

b. 2 Plug the bleeder kit to the manifold.

Step 11. To push the air out of the manifold return side, connect **facility supply** to **manifold supply**.

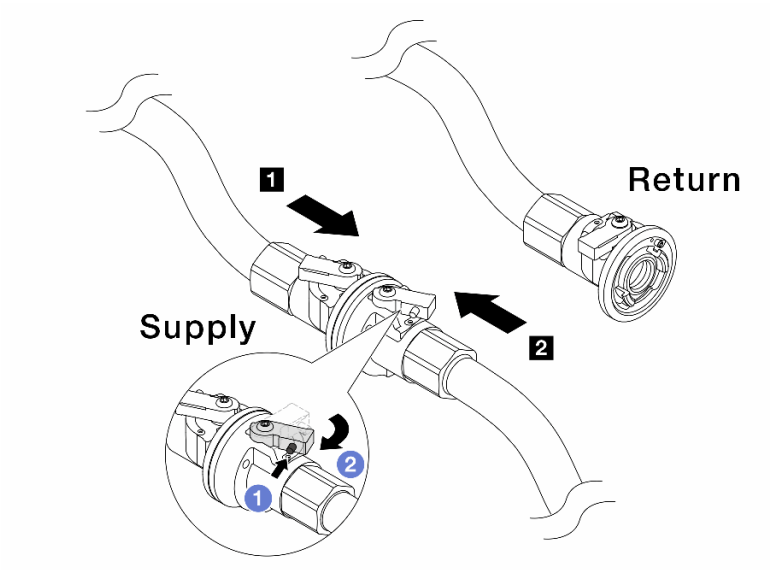

Figure 177. Facility supply to manifold supply

a. 1 Press the button on the ball valve switch.

b. 2 Rotate both switches open and stop at around 1/4 of 90 degrees.

Attention:

- Open the ball valves on 1 manifold supply side and 2 facility supply side, while keep manifold return side closed.
- Do not fully open the ball valves, or the water flow gets too rapid to contain.

Step 12. Slowly open the bleeder valve to conduct the air out of the hose. Close the bleeder valve once a steady stream of water flows into the bucket or there are only minimal bubbles in the bleeder hose.

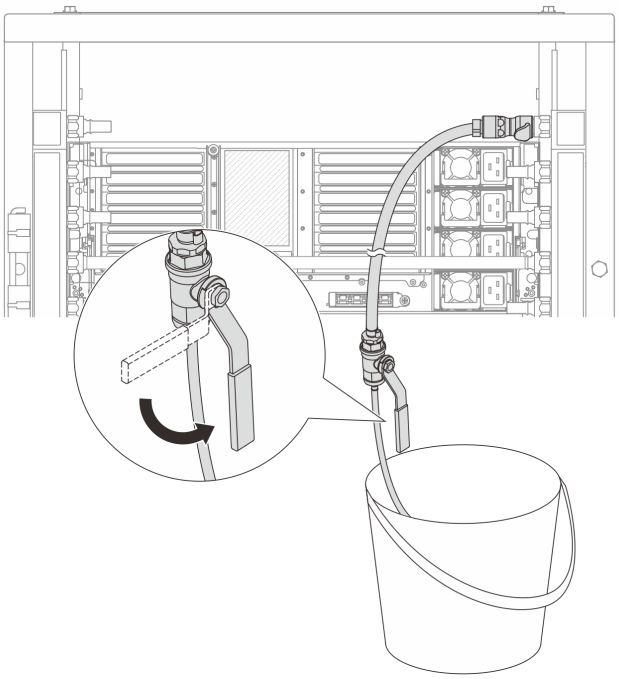

Figure 178. Opening the bleeder valve on the return side

Step 13. (For precaution) To make sure that the air inside is as little as possible, re-install the bleeder kit back to manifold supply side and do it one more time. Close the bleeder valve once a steady stream of water flows into the bucket or there are only minimal bubbles in the bleeder hose.

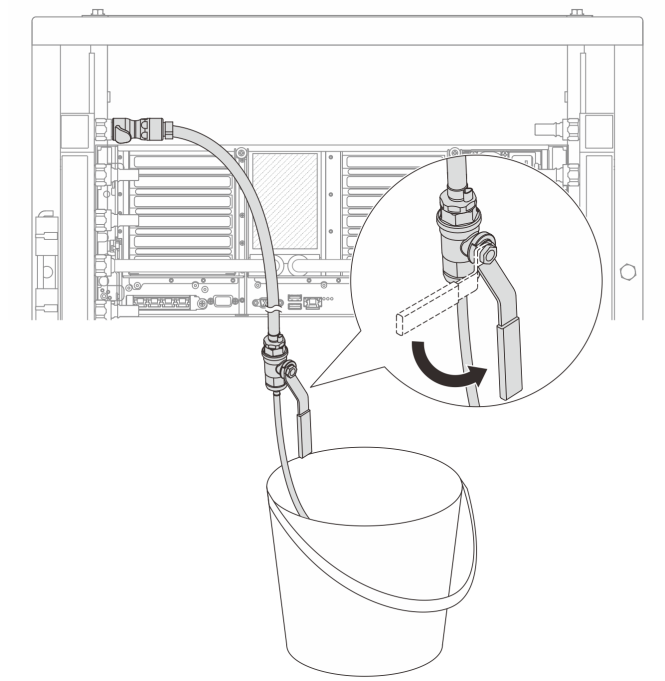

Figure 179. Opening the bleeder valve on the supply side

Step 14. Once completed, connect the supply and return of manifold and facility correspondingly. Fully open all connections on both supply and return sides.

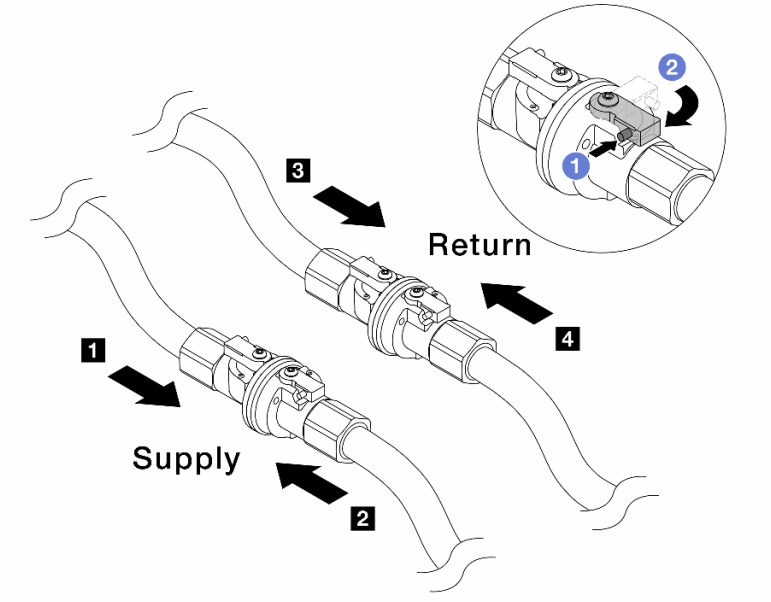

Figure 180. Opening ball valves

Note:

1 Manifold supply connects to 2 facility supply	**3 Manifold return connects to 4 facility return**

a. (1) Press the button on the ball valve switch.
b. (2) Rotate the switch to fully open the valves as illustrated above.

After you finish

Complete the parts replacement. See “Complete the parts replacement” on page 382.

Demo video

Note: The parts shown in this video are for demonstration purposes only. Actual parts may differ in appearance.

Watch the procedure on YouTube

Memory module replacement

Use the following procedures to remove and install a memory module.

Remove a memory module

Use this information to remove a memory module.

About this task

Attention:

- Read “Installation Guidelines” on page 45 and “Safety inspection checklist” on page 46 to ensure that you work safely.
- Power off the server and peripheral devices and disconnect the power cords and all external cables. See “Power off the server” on page 61.
- Make sure to remove or install memory module 20 seconds after disconnecting power cords from the system. It allows the system to be completely discharged of electricity and safe for handling memory module.
- If you are not installing a replacement memory module to the same slot, make sure you have memory module filler available.
- Memory modules are sensitive to static discharge and require special handling. Refer to the standard guidelines for “Handling static-sensitive devices” on page 48.

Important: Remove or install memory modules for one processor at a time.

Procedure

Attention: Make sure to remove or install memory module 20 seconds after disconnecting power cords from the system. It allows the system to be completely discharged of electricity and safe for handling memory module.

Step 1. If the server is installed in a rack, slide the server out on its rack slide rails to gain access to the top covers, or remove the server from the rack. See “Server replacement” on page 67.

Step 2. Do one of the following steps:

a. To replace a front memory module (memory module 33-64), remove the following:

1. Remove the front top cover. See “Remove the front top cover” on page 369
2. Remove the front air baffle. See “Remove the front air baffle” on page 107.

b. To replace a rear memory module (memory module 1-32), remove the following:

1. Remove the front top cover. See “Remove the front top cover” on page 369
2. Remove the rear top cover. See “Remove the rear top cover” on page 371.
3. Remove the crossbar. See “Remove the crossbar” on page 125.
4. Remove the PCIe risers. See “Remove the PCIe riser” on page 249.
5. Remove the rear air baffle. See “Remove the rear air baffle” on page 112.
6. If 2U performance PHMs are installed, remove them to access the memory module slots. See “Remove a processor and heat sink” on page 306.

Note: This procedure must be executed by a trained technician.

Step 3. Locate the required memory module slot on the system board assembly.

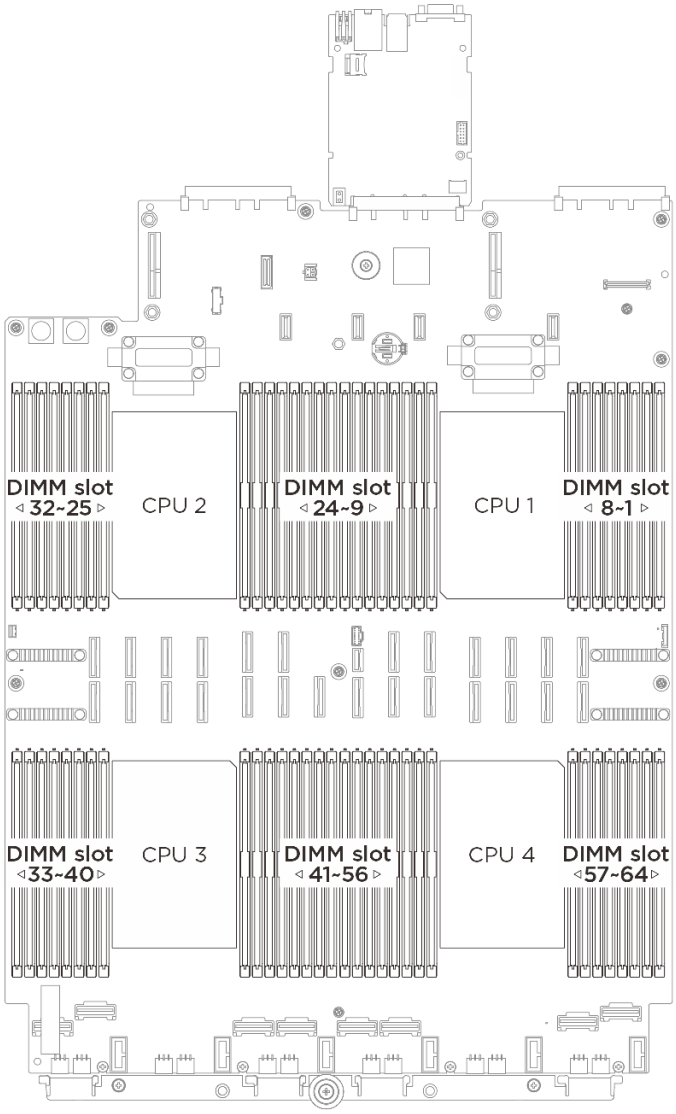

Figure 181. Memory modules and processors layout

Step 4. Remove the memory module from the slot.

Attention: To avoid breaking the retaining clips or damaging the memory module slots, handle the clips gently.

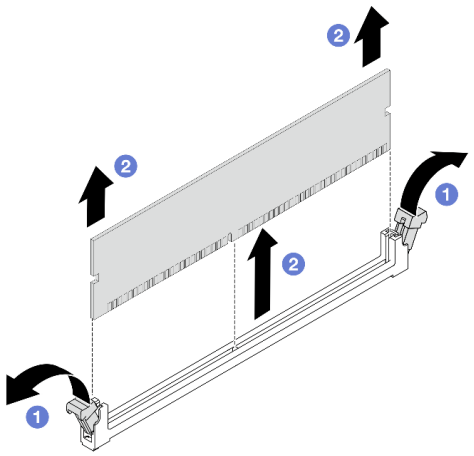

Figure 182. Memory module removal

a. 1 Gently open the retaining clip on each end of the memory module slot.

b. 2 Grasp the memory module at both ends and carefully lift it out of the slot.

After you finish

1. A memory module slot must be installed with a memory module or a memory module filler. See “Install a memory module” on page 238.
2. If you are instructed to return the component or optional device, follow all packaging instructions, and use any packaging materials for shipping that are supplied to you.

Demo video

Watch the procedure on YouTube

Install a memory module

Follow instructions in this section to install a memory module.

About this task

See “Memory module installation rules and order” on page 48 for detailed information about memory configuration and setup.

Attention:

- Read “Installation Guidelines” on page 45 and “Safety inspection checklist” on page 46 to ensure that you work safely.
- Make sure to remove or install memory module 20 seconds after disconnecting power cords from the system. It allows the system to be completely discharged of electricity and safe for handling memory module.
- Make sure to adopt one of the supported configurations listed in “Memory module installation rules and order” on page 48.

- Memory modules are sensitive to static discharge and require special handling. Refer to the standard guidelines at “Handling static-sensitive devices” on page 48:
  - Always wear an electrostatic-discharge strap when removing or installing memory modules. Electrostatic-discharge gloves can also be used.
  - Never hold two or more memory modules together so that they do not touch each other. Do not stack memory modules directly on top of each other during storage.
  - Never touch the gold memory module connector contacts or allow these contacts to touch the outside of the memory module connector housing.
  - Handle memory modules with care: never bend, twist, or drop a memory module.
  - Do not use any metal tools (such as jigs or clamps) to handle the memory modules, because the rigid metals may damage the memory modules.
  - Do not insert memory modules while holding packages or passive components, which can cause package cracks or detachment of passive components by the high insertion force.

Important:

- Remove or install memory modules for one processor at a time.
- Before installing 24 Gb DRAM RDIMMs, make sure to update the UEFI firmware to the latest version first, then remove all existing 16 Gb DRAM RDIMMs.

Firmware and driver download: You might need to update the firmware or driver after replacing a component.

- Go to https://datacentersupport.lenovo.com/products/servers/thinksystem/sr860v4/7djn/downloads/driver-list to see the latest firmware and driver updates for your server.
- Go to “Update the firmware” on page 386 for more information on firmware updating tools.

Procedure

Attention: Make sure to remove or install memory module 20 seconds after disconnecting power cords from the system. It allows the system to be completely discharged of electricity and safe for handling memory module.

Step 1. Touch the static-protective package that contains the memory module to any unpainted surface on the outside of the server. Then, take the memory module out of the package and place it on a static-protective surface.

Step 2. Locate the required memory module slot on the system board assembly.

> **Note:** Ensure that you observe the installation rules and sequence order in “Memory module installation rules and order” on page 48.

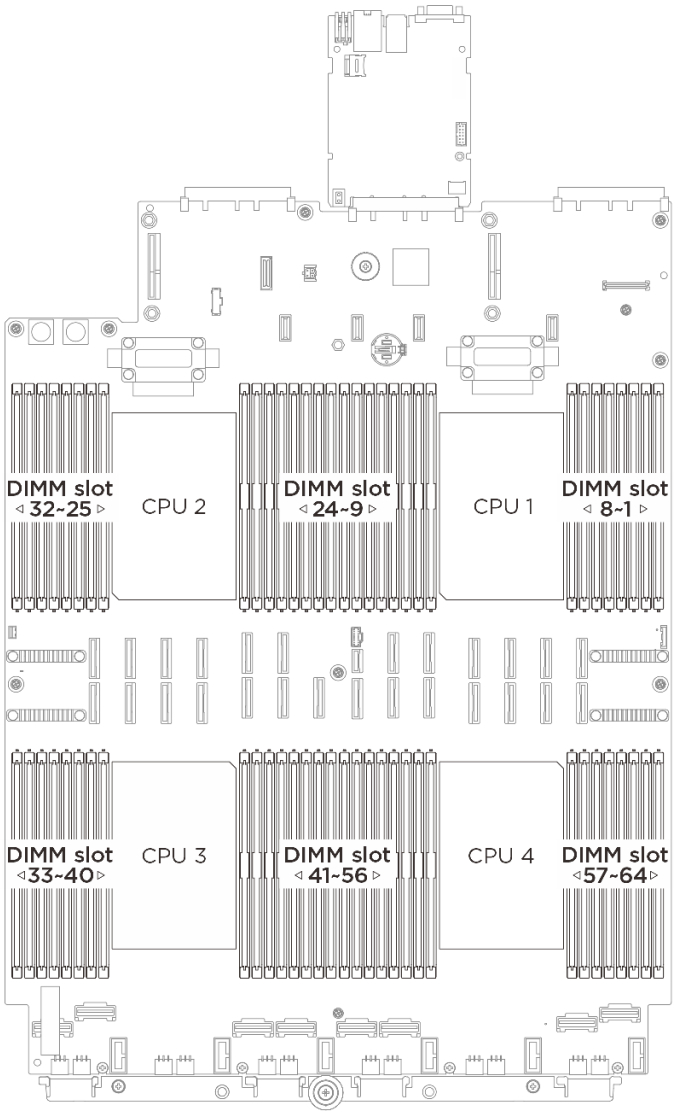

Figure 183. Memory modules and processors layout

Step 3. Install the memory module into the slot.

Attention:

- To avoid breaking the retaining clips or damaging the memory module slots, open and close the clips gently.
- If there is a gap between the memory module and the retaining clips, the memory module has not been correctly inserted. In this case, open the retaining clips, remove the memory module, and then reinsert it.

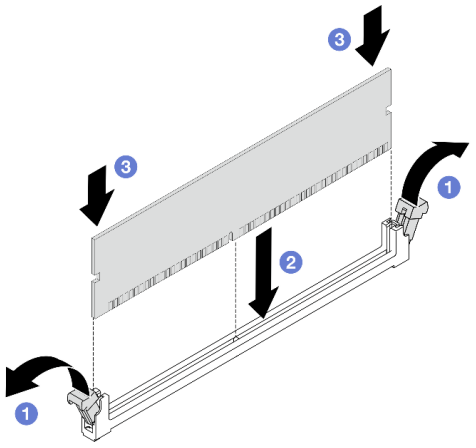

Figure 184. Memory module installation

a. 1 Gently open the retaining clip on each end of the memory module slot.

b. 2 Align the memory module with the slot, and gently place the memory module on the slot with both hands.

c. 3 Firmly press both ends of the memory module straight down into the slot until the retaining clips snap into the locked position.

After you finish

1. If the 2U performance PHM was removed to access the memory modules, reinstall it. See “Install a processor and heat sink” on page 311.
2. Reinstall all the PCIe risers if you have removed them. See “Install the PCIe riser” on page 261.
3. Reinstall the crossbar if you have removed it. See “Install the crossbar” on page 128.
4. Reinstall the rear air baffle. See “Install the rear air baffle” on page 115.
5. Reinstall the front air baffle. See “Install the front air baffle” on page 109.
6. Reinstall the rear top cover. See “Install the rear top cover” on page 373.
7. Reinstall the front top cover. See “Install the front top cover” on page 375.
8. Complete the parts replacement. See “Complete the parts replacement” on page 382.

Demo video

Watch the procedure on YouTube

MicroSD card replacement (trained technician only)

Follow instructions in this section to remove and install the MicroSD card.

Important: This task must be operated by trained technicians that are certified by Lenovo Service. Do not attempt to remove or install the part without proper training and qualification.

Remove the MicroSD card

Follow instructions in this section to remove the MicroSD card. This procedure must be executed by a trained technician.

About this task

Attention:

- Read “Installation Guidelines” on page 45 and “Safety inspection checklist” on page 46 to ensure that you work safely.
- Power off the server and peripheral devices and disconnect the power cords and all external cables. See “Power off the server” on page 61.
- Prevent exposure to static electricity, which might lead to system halt and loss of data, by keeping static-sensitive components in their static-protective packages until installation, and handling these devices with an electrostatic-discharge wrist strap or other grounding system.

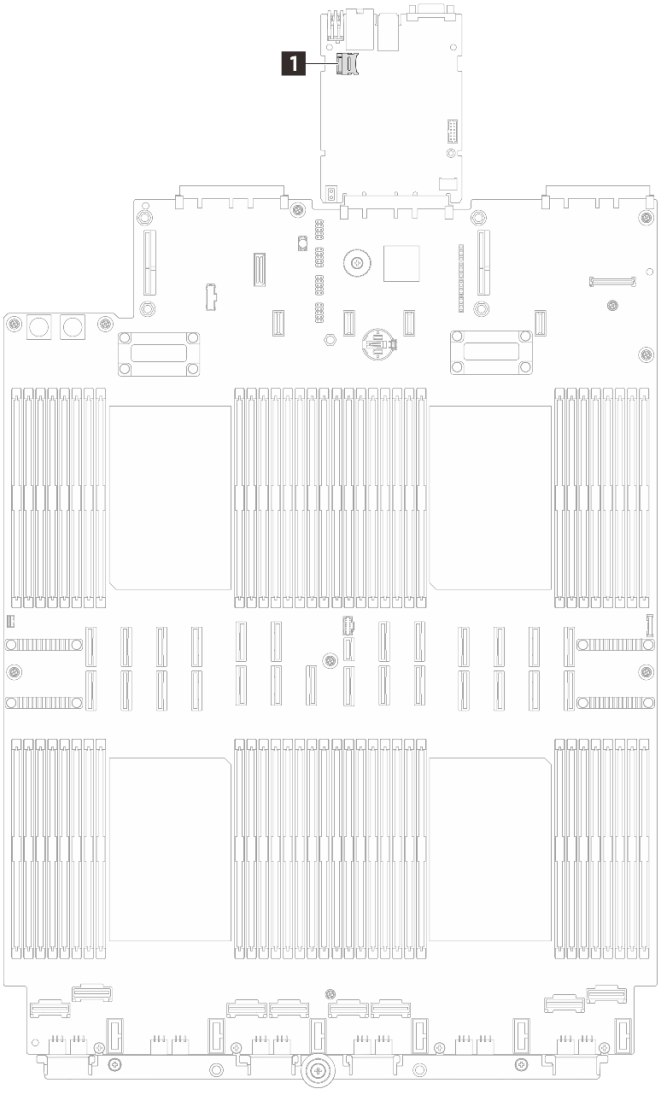

Figure 185. MicroSD card location

Procedure

Step 1. If the server is installed in a rack, slide the server out on its rack slide rails to gain access to the top covers, or remove the server from the rack. See “Server replacement” on page 67.

Step 2. Remove the front top cover. See “Remove the front top cover” on page 369.

Step 3. Remove the rear top cover. See “Remove the rear top cover” on page 371.

Step 4. Remove the crossbar. See “Remove the crossbar” on page 125.

Step 5. Remove the PCIe risers. See “Remove the PCIe riser” on page 249.

Step 6. Remove the MicroSD card.

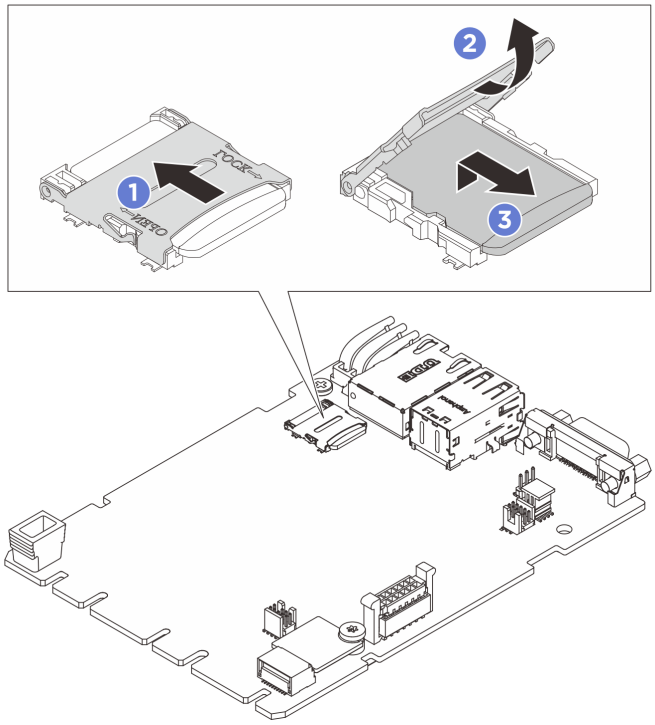

Figure 186. MicroSD card removal

a. Slide the socket lid to the open position.
b. Lift open the socket lid.
c. Remove the MicroSD card from the socket.

Note: After the MicroSD card is removed, the historical data of the firmware and user data uploaded through Remote Disc On Card (RDOC) will be lost, and the firmware rollback function and extended RDOC space will not be supported. To enable the two features, it will need to install a new MicroSD card.

After you finish

If you are instructed to return the component or optional device, follow all packaging instructions, and use any packaging materials for shipping that are supplied to you.

Demo video

Watch the procedure on YouTube

Install the MicroSD card

Follow instructions in this section to install the MicroSD card. This procedure must be executed by a trained technician.

About this task

Attention:

- Read “Installation Guidelines” on page 45 and “Safety inspection checklist” on page 46 to ensure that you work safely.

- Prevent exposure to static electricity, which might lead to system halt and loss of data, by keeping static-sensitive components in their static-protective packages until installation, and handling these devices with an electrostatic-discharge wrist strap or other grounding system.

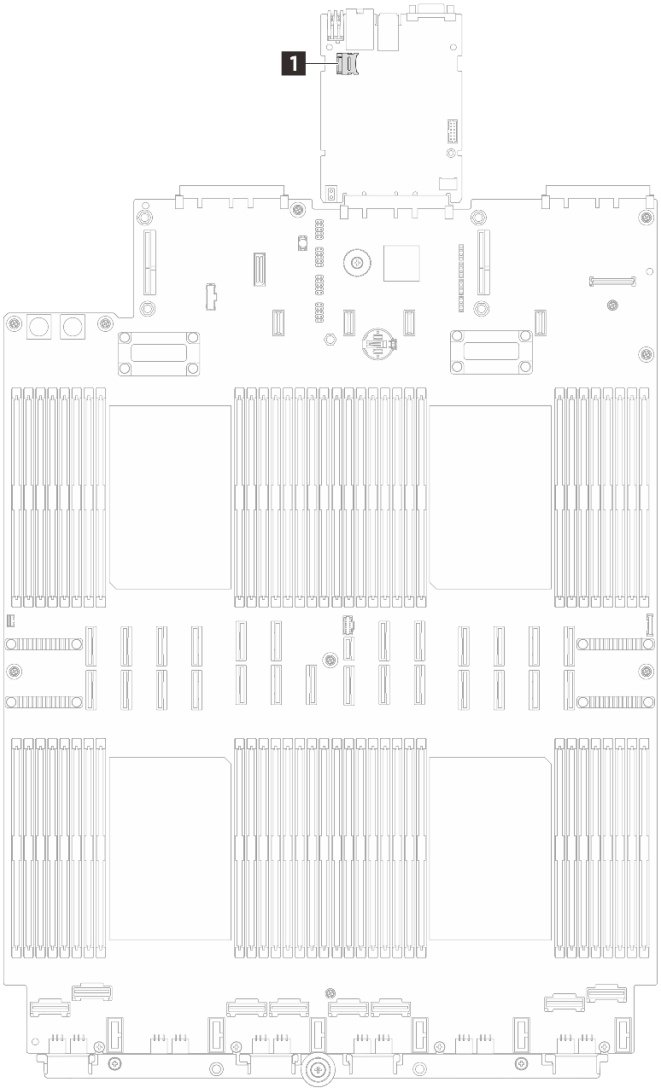

Figure 187. MicroSD card location

Procedure

Step 1. Touch the static-protective package that contains the new part to any unpainted surface on the outside of the server; then, take the new part out of the package and place it on a static-protective surface.

Step 2. Install the MicroSD card into the socket.

Notes:
- If replacing with a new MicroSD card, the firmware historical data and user data stored in the defective MicroSD card would be lost. After a new MicroSD card is installed, subsequent firmware update history will be saved to the new card.
- To update firmware, refer to “Updating Server Firmware” section in Lenovo XClarity Controller 3.

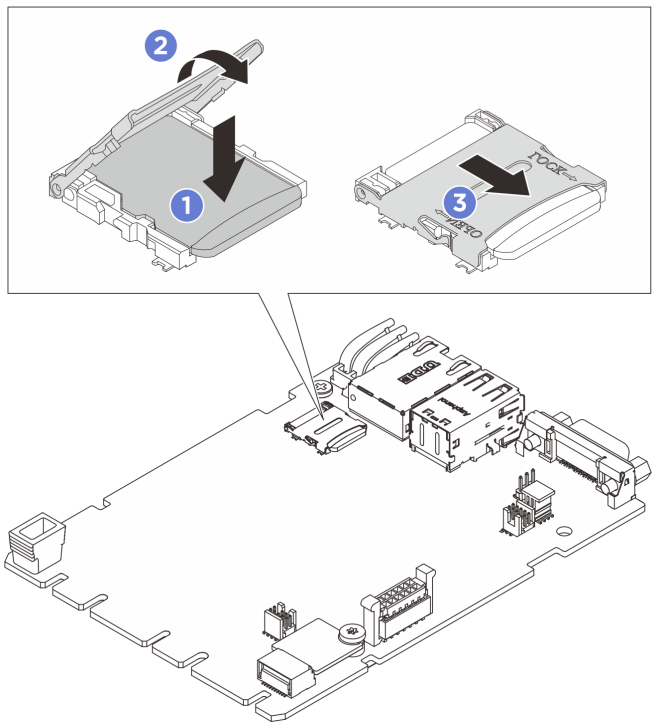

Figure 188. MicroSD card installation

a. 1 Place the MicroSD card into the socket.
b. 2 Close the socket lid.
c. 3 Slide the socket lid to the lock position.

After you finish

1. Reinstall the PCIe risers. See “Install the PCIe riser” on page 261.
2. Reinstall the crossbar. See “Install the crossbar” on page 128.
3. Reinstall the rear top cover. See “Install the rear top cover” on page 373.
4. Reinstall the front top cover. See “Install the front top cover” on page 375.
5. Complete the parts replacement. See “Complete the parts replacement” on page 382.

Demo video

Watch the procedure on YouTube

OCP module replacement

Follow instructions in this section to remove and install an OCP module.

Remove an OCP module

Follow instructions in this section to remove an OCP module.

About this task

Attention:

- Read “Installation Guidelines” on page 45 and “Safety inspection checklist” on page 46 to ensure that you work safely.
- Power off the server and peripheral devices and disconnect the power cords and all external cables. See “Power off the server” on page 61.
- Prevent exposure to static electricity, which might lead to system halt and loss of data, by keeping static-sensitive components in their static-protective packages until installation, and handling these devices with an electrostatic-discharge wrist strap or other grounding system.

Procedure

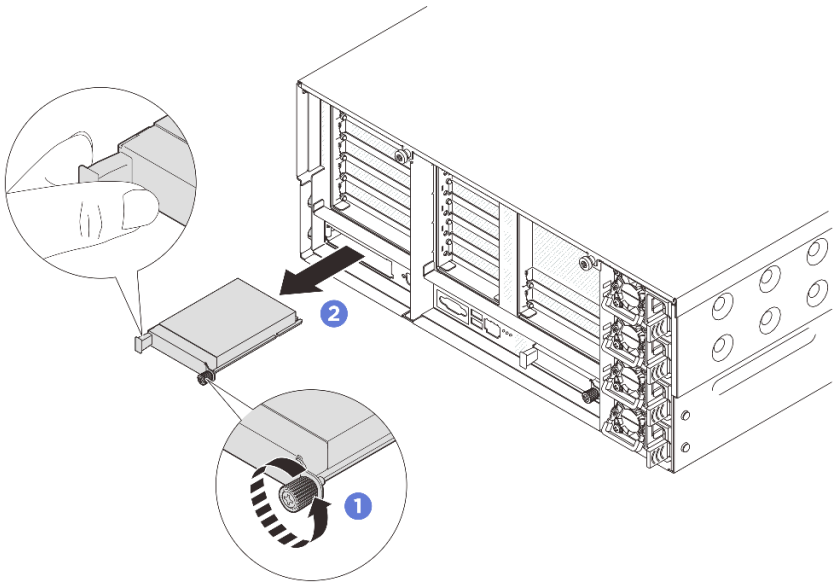

Figure 189. OCP module removal

Step 1. Loosen the thumbscrew. Use a screwdriver if necessary.

Step 2. Grasp the handle and slide the OCP module out.

After you finish

If you are instructed to return the component or optional device, follow all packaging instructions, and use any packaging materials for shipping that are supplied to you.

Demo video

Watch the procedure on YouTube

Install an OCP module

Follow instructions in this section to install an OCP module.

About this task

Attention:

- Read “Installation Guidelines” on page 45 and “Safety inspection checklist” on page 46 to ensure that you work safely.

- Prevent exposure to static electricity, which might lead to system halt and loss of data, by keeping static-sensitive components in their static-protective packages until installation, and handling these devices with an electrostatic-discharge wrist strap or other grounding system.
- Prevent exposure to static electricity, which might lead to system halt and loss of data, by keeping static-sensitive components in their static-protective packages until installation, and handling these devices with an electrostatic-discharge wrist strap or other grounding system.

Firmware and driver download: You might need to update the firmware or driver after replacing a component.

- Go to https://datacentersupport.lenovo.com/products/servers/thinksystem/sr860v4/7djn/downloads/driver-list to see the latest firmware and driver updates for your server.
- Go to "Update the firmware" on page 386 for more information on firmware updating tools.

Procedure

Step 1. If the OCP is covered with a OCP filler, remove the filler from the chassis first.

Step 2. Install the OCP module.

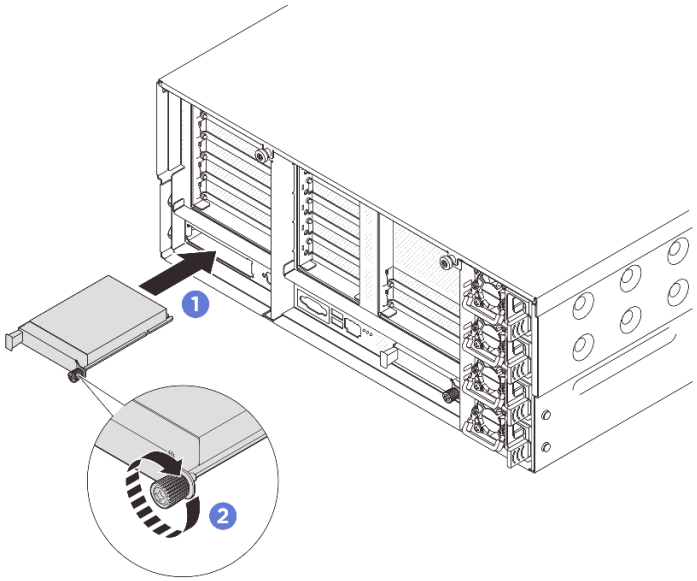

Figure 190. OCP module installation

a. 1 Slide the OCP module into the slot until it is fully seated.

b. 2 Tighten the thumbscrew to secure the OCP module. Use a screwdriver if necessary.

After you finish

Complete the parts replacement. See "Complete the parts replacement" on page 382.

Demo video

Watch the procedure on YouTube

PCIe riser and PCIe adapter replacement

Follow instructions in this section to remove and install a PCIe riser and a PCIe adapter.

Remove the PCIe riser

Follow the instructions in this section to remove the PCIe riser.

About this task

Attention:

- Read “Installation Guidelines” on page 45 and “Safety inspection checklist” on page 46 to ensure that you work safely.
- Power off the server and peripheral devices and disconnect the power cords and all external cables. See “Power off the server” on page 61.
- Prevent exposure to static electricity, which might lead to system halt and loss of data, by keeping static-sensitive components in their static-protective packages until installation, and handling these devices with an electrostatic-discharge wrist strap or other grounding system.

Note: For more details on the different types of risers, see “Rear view” on page 28.

Depending on your configuration, follow the corresponding procedures below for proper removal procedure.

- “Remove PCIe riser 2” on page 249
- “Remove PCIe riser 1” on page 250
- “Remove PCIe riser 3” on page 252

Remove PCIe riser 2

Procedure

Step 1. If the server is installed in a rack, slide the server out on its rack slide rails to gain access to the top covers, or remove the server from the rack. See “Server replacement” on page 67.

Step 2. Remove the front top cover. See “Remove the front top cover” on page 369.

Step 3. Remove the rear top cover. See “Remove the rear top cover” on page 371.

Step 4. Remove the crossbar. See “Remove the crossbar” on page 125.

Step 5. Record the cable connections and disconnect all cables from the system board assembly. See

Attention: To avoid damaging the system board assembly, make sure to follow the instructions in ***Internal Cable Routing Guide*** when disconnecting cables from the system board assembly.

Step 6. If there are PCIe adapters installed, record the cable connections and disconnect cables from the backplanes.

Step 7. Grasp and lift the PCIe riser to remove it from the chassis..

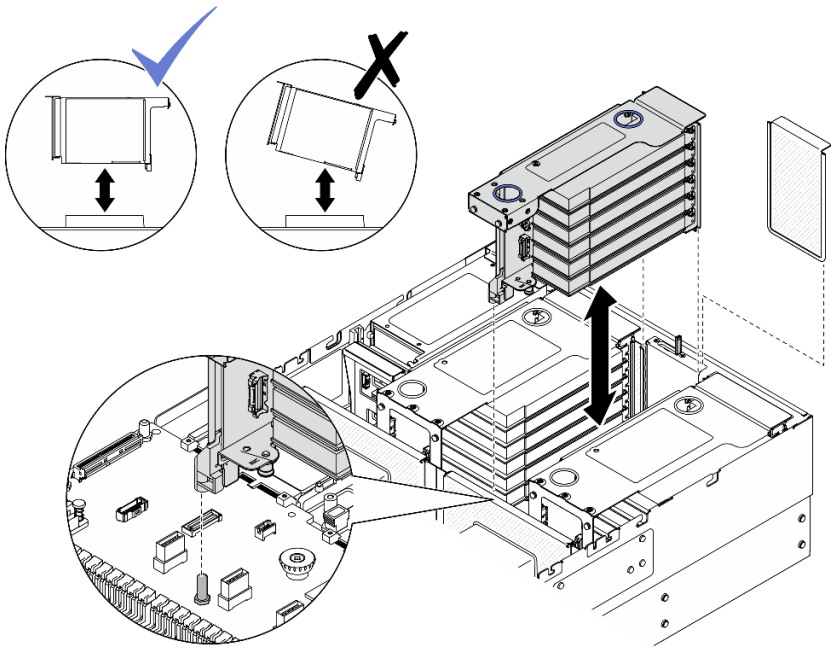

Figure 191. Removing PCIe riser 2

Remove PCIe riser 1

Procedure

Step 1. If the server is installed in a rack, slide the server out on its rack slide rails to gain access to the top covers, or remove the server from the rack. See “Server replacement” on page 67.

Step 2. Remove the front top cover. See “Remove the front top cover” on page 369.

Step 3. Remove the rear top cover. See “Remove the rear top cover” on page 371.

Step 4. Remove the crossbar. See “Remove the crossbar” on page 125.

Step 5. Record the cable connections and disconnect PCIe riser 1 and PCIe riser 2 cables from the system board assembly. See

Attention: To avoid damaging the system board assembly, make sure to follow the instructions in ***Internal Cable Routing Guide*** when disconnecting cables from the system board assembly.

Step 6. If there are PCIe adapters installed, record the cable connections and disconnect cables from the backplanes.

Step 7. Remove PCIe riser 2. Grasp and lift the PCIe riser to remove it from the chassis.

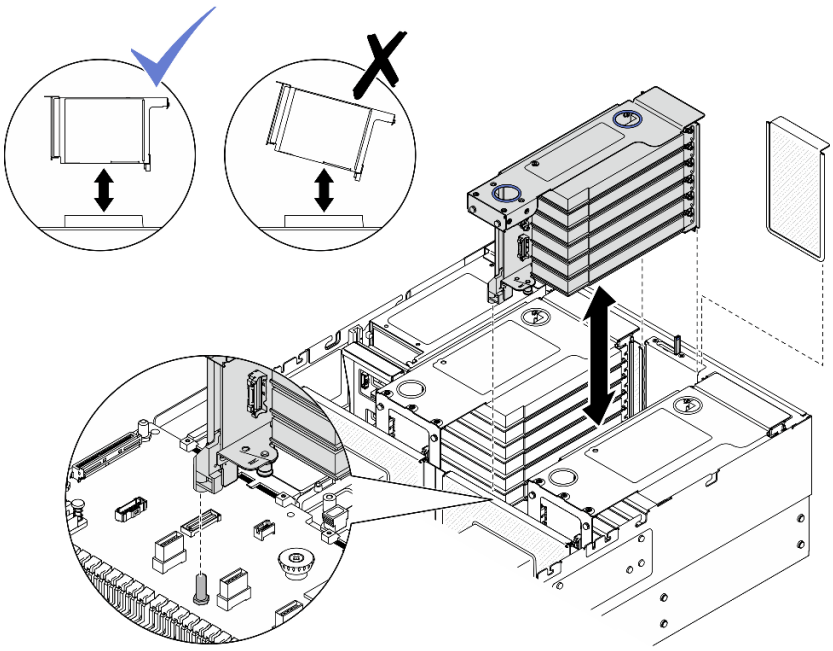

Figure 192. Removing PCIe riser 2

Step 8. Remove PCIe riser 1.

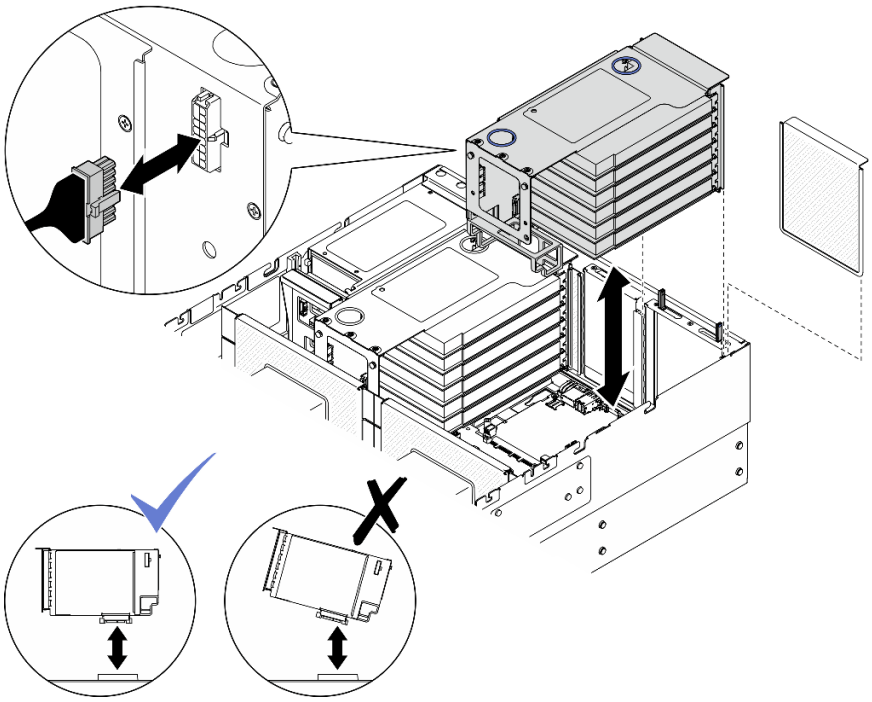

Figure 193. Removing PCIe riser 1

a. Disconnect the power cable from the PCIe riser.

b. Grasp and lift the PCIe riser to remove it from the chassis.

Remove PCIe riser 3

Procedure

Step 1. If the server is installed in a rack, slide the server out on its rack slide rails to gain access to the top covers, or remove the server from the rack. See “Server replacement” on page 67.

Step 2. Remove the front top cover. See “Remove the front top cover” on page 369.

Step 3. Remove the rear top cover. See “Remove the rear top cover” on page 371.

Step 4. Remove the crossbar. See “Remove the crossbar” on page 125.

Step 5. Record the cable connections and disconnect PCIe riser 2 and PCIe riser 3 cables from the system board assembly. See

Attention: To avoid damaging the system board assembly, make sure to follow the instructions in ***Internal Cable Routing Guide*** when disconnecting cables from the system board assembly.

Step 6. If there are PCIe adapters installed, record the cable connections and disconnect cables from the backplanes.

Step 7. Remove PCIe riser 2. Grasp and lift the PCIe riser to remove it from the chassis.

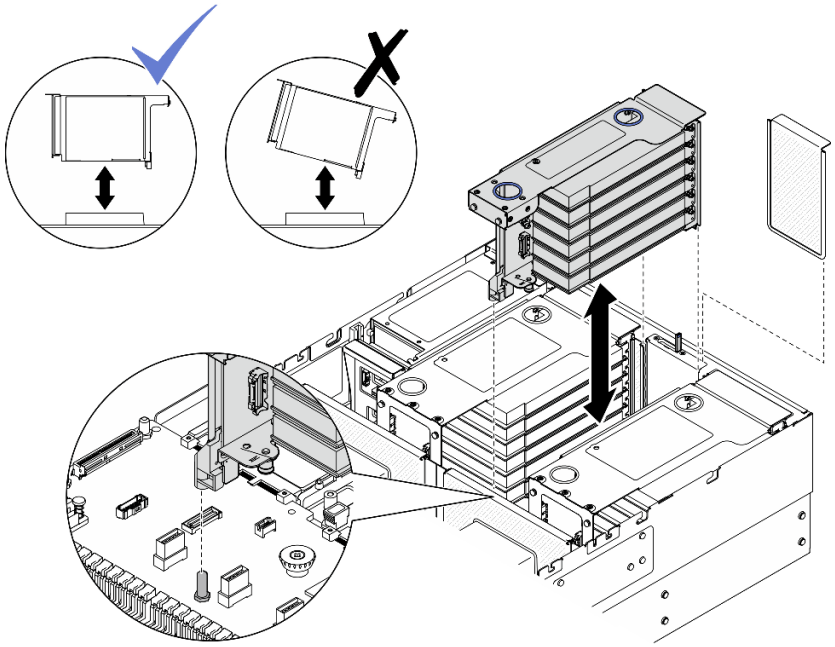

Figure 194. Removing PCIe riser 2

Step 8. Remove PCIe riser 3.

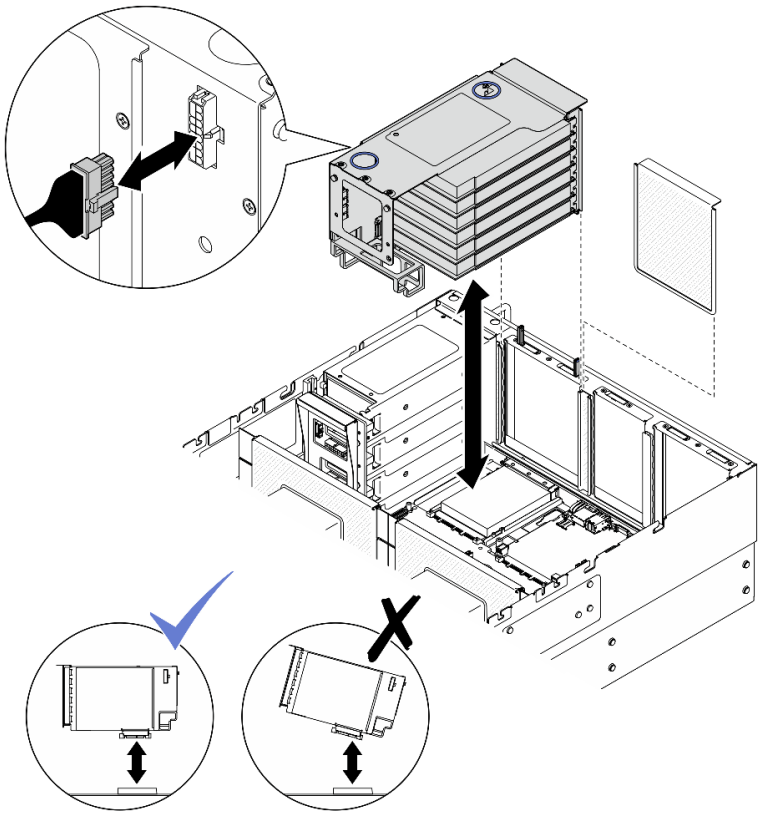

Figure 195. Removing PCIe riser 3

a. Disconnect the power cable from the PCIe riser.
b. Grasp and lift the PCIe riser to remove it from the chassis.

After you finish

1. If you plan to replace the PCIe riser, remove the PCIe adapters. See "Remove a PCIe adapter" on page 253.
2. Install a replacement unit or filler. See "Install the PCIe riser" on page 261.
3. If you are instructed to return the component or optional device, follow all packaging instructions, and use any packaging materials for shipping that are supplied to you.

Demo video

Watch the procedure on YouTube

Remove a PCIe adapter

Follow the instructions in this section to remove a PCIe adapter.

About this task

S002

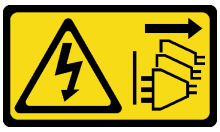

CAUTION:
The power-control button on the device and the power switch on the power supply do not turn off the electrical current supplied to the device. The device also might have more than one power cord. To remove all electrical current from the device, ensure that all power cords are disconnected from the power source.

Attention:

- Read “Installation Guidelines” on page 45 and “Safety inspection checklist” on page 46 to ensure that you work safely.
- Power off the server and peripheral devices and disconnect the power cords and all external cables. See “Power off the server” on page 61.
- Prevent exposure to static electricity, which might lead to system halt and loss of data, by keeping static-sensitive components in their static-protective packages until installation, and handling these devices with an electrostatic-discharge wrist strap or other grounding system.

Notes:

- For a list of the supported PCIe adapters, see https://serverproven.lenovo.com.
- Ensure that you observe the installation rules and sequence order in “PCIe riser and adapter installation rules and order” on page 58.
- For instructions on how to remove and install a double-wide GPU adapter, see “GPU adapter replacement” on page 161.
- For more details on the different types of risers, see “Rear view” on page 28.

Depending on your configuration, follow the corresponding procedures below for proper removal procedure.

- “Remove PCIe adapter from the two-slot FH riser” on page 254
- “Remove PCIe adapter from the six-slot FH riser” on page 255
- “Remove PCIe adapter from the six-slot HH riser” on page 256

Remove PCIe adapter from the two-slot FH riser

Procedure

Step 1. If the server is installed in a rack, slide the server out on its rack slide rails to gain access to the top covers, or remove the server from the rack. See “Server replacement” on page 67.

Step 2. Remove the front top cover. See “Remove the front top cover” on page 369.

Step 3. Remove the rear top cover. See “Remove the rear top cover” on page 371.

Step 4. Remove the crossbar. See “Remove the crossbar” on page 125.

Step 5. Remove the PCIe riser where the PCIe adapter is installed. See “Remove the PCIe riser” on page 249.

Step 6. Remove the PCIe adapter.

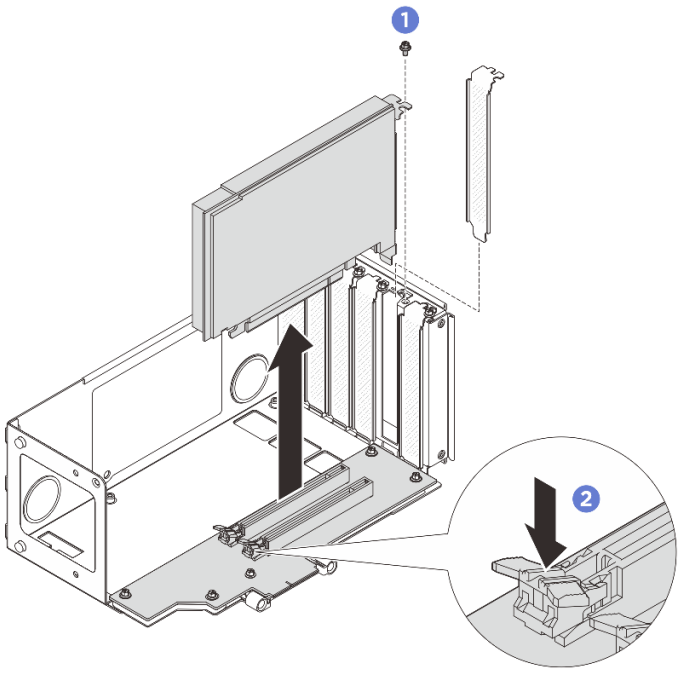

Figure 196. Removing PCIe adapter from riser

a. 1 Remove the screw that secures the adapter to the PCIe riser.
b. 2 Press on the latch to disengage the adapter from the PCIe riser.
c. 3 Grasp the PCIe adapter by its edges and carefully pull it out of the PCIe slot.

Remove PCIe adapter from the six-slot FH riser

Procedure

Step 1. If the server is installed in a rack, slide the server out on its rack slide rails to gain access to the top covers, or remove the server from the rack. See "Server replacement" on page 67.

Step 2. Remove the front top cover. See "Remove the front top cover" on page 369.

Step 3. Remove the rear top cover. See "Remove the rear top cover" on page 371.

Step 4. Remove the crossbar. See "Remove the crossbar" on page 125.

Step 5. Remove the PCIe riser where the PCIe adapter is installed. See "Remove the PCIe riser" on page 249.

Step 6. Remove the PCIe adapter.

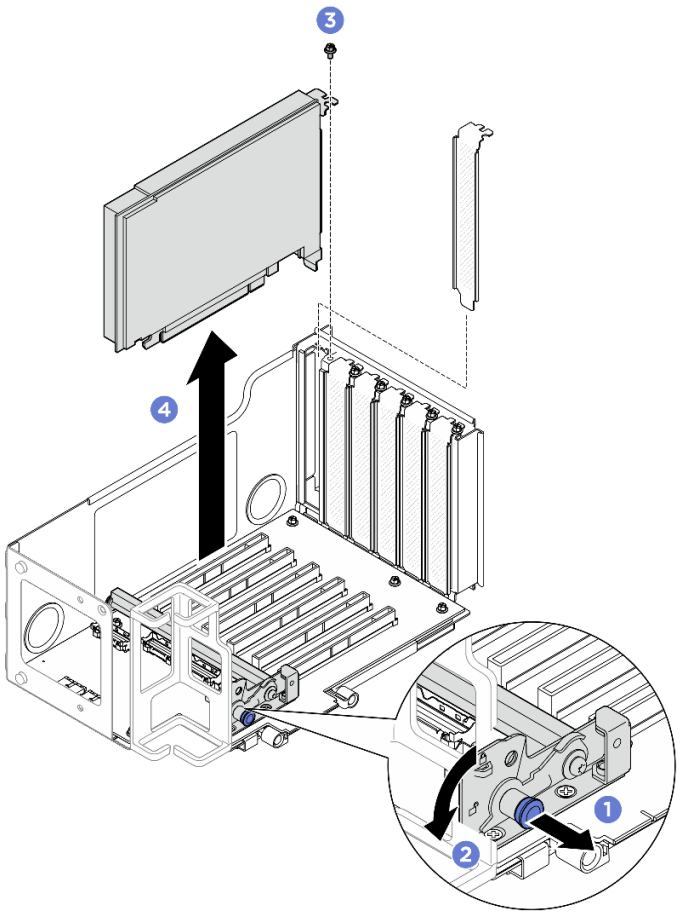

Figure 197. Removing PCIe adapter from riser

a. 1 Pull the plunger that secures the PCIe adapter retainer.
b. 2 Open the PCIe adapter retainer to the unlocked position.
c. 3 Remove the screw that secures the adapter to the PCIe riser.
d. 4 Grasp the PCIe adapter by its edges and carefully pull it out of the PCIe slot.

Remove PCIe adapter from the six-slot HH riser

Procedure

Step 1. If the server is installed in a rack, slide the server out on its rack slide rails to gain access to the top covers, or remove the server from the rack. See “Server replacement” on page 67.

Step 2. Remove the front top cover. See “Remove the front top cover” on page 369.

Step 3. Remove the rear top cover. See “Remove the rear top cover” on page 371.

Step 4. Remove the crossbar. See “Remove the crossbar” on page 125.

Step 5. Remove the PCIe riser where the PCIe adapter is installed. See “Remove the PCIe riser” on page 249.

Step 6. Remove the PCIe adapter.

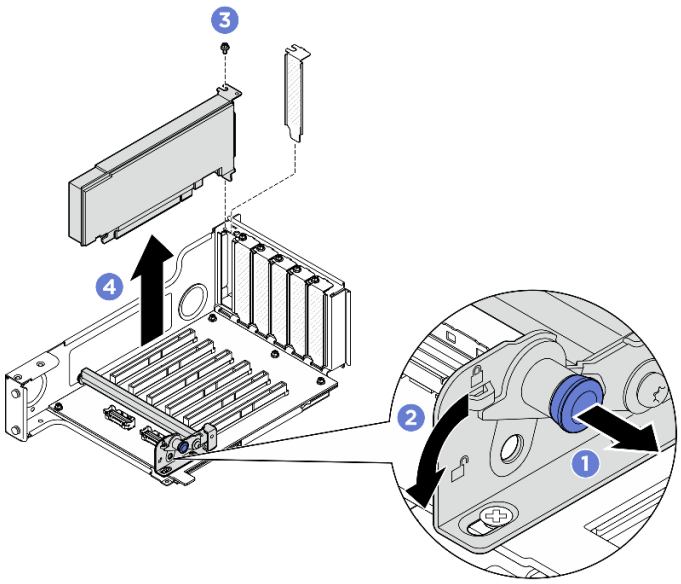

Figure 198. Removing PCIe adapter from riser

a. 1 Pull the plunger that secures the PCIe adapter retainer.
b. 2 Open the PCIe adapter retainer to the unlocked position.
c. 3 Remove the screw that secures the adapter to the PCIe riser.
d. 4 Grasp the PCIe adapter by its edges and carefully pull it out of the PCIe slot.

After you finish

1. Install a replacement unit or filler. See "Install a PCIe adapter" on page 257.
2. If you are instructed to return the component or optional device, follow all packaging instructions, and use any packaging materials for shipping that are supplied to you.

Demo video

Watch the procedure on YouTube

Install a PCIe adapter

Follow the instructions in this section to install a PCIe adapter.

About this task

S002



CAUTION:
The power-control button on the device and the power switch on the power supply do not turn off the electrical current supplied to the device. The device also might have more than one power cord. To

remove all electrical current from the device, ensure that all power cords are disconnected from the power source.

Attention:

- Read “Installation Guidelines” on page 45 and “Safety inspection checklist” on page 46 to ensure that you work safely.
- Power off the server and peripheral devices and disconnect the power cords and all external cables. See “Power off the server” on page 61.
- Prevent exposure to static electricity, which might lead to system halt and loss of data, by keeping static-sensitive components in their static-protective packages until installation, and handling these devices with an electrostatic-discharge wrist strap or other grounding system.

Depending on your configuration, follow the corresponding procedures below for proper installation procedure.

- “Install PCIe adapter to two slot FH riser” on page 258
- “Install PCIe adapter to six slot FH riser” on page 259
- “Install PCIe adapter to six slot HH riser” on page 260

Firmware and driver download: You might need to update the firmware or driver after replacing a component.

- Go to https://datacentersupport.lenovo.com/products/servers/thinksystem/sr860v4/7djn/downloads/driver-list to see the latest firmware and driver updates for your server.
- Go to “Update the firmware” on page 386 for more information on firmware updating tools.

Install PCIe adapter to two slot FH riser

Procedure

Step 1. If a filler has been installed to the slot on the PCIe riser, remove the screw that secures it and remove the filler.

Step 2. Install the PCIe adapter.

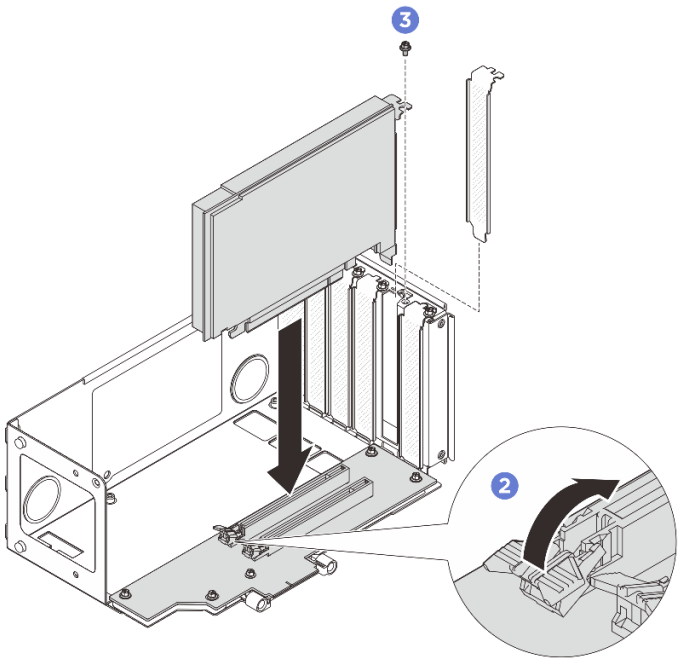

Figure 199. Installing PCIe adapter to riser

a. 1 Align the adapter with the connector on the PCIe riser; then, carefully press the PCIe adapter straight into the slot until it is securely seated and its bracket also is secured.

b. 2 Make sure the latch clicks in the locked position.

c. 3 Secure the adapter with a screw.

Install PCIe adapter to six slot FH riser

Procedure

Step 1. If a filler has been installed to the slot on the PCIe riser, remove the screw that secures it and remove the filler.

Step 2. Install the PCIe adapter.

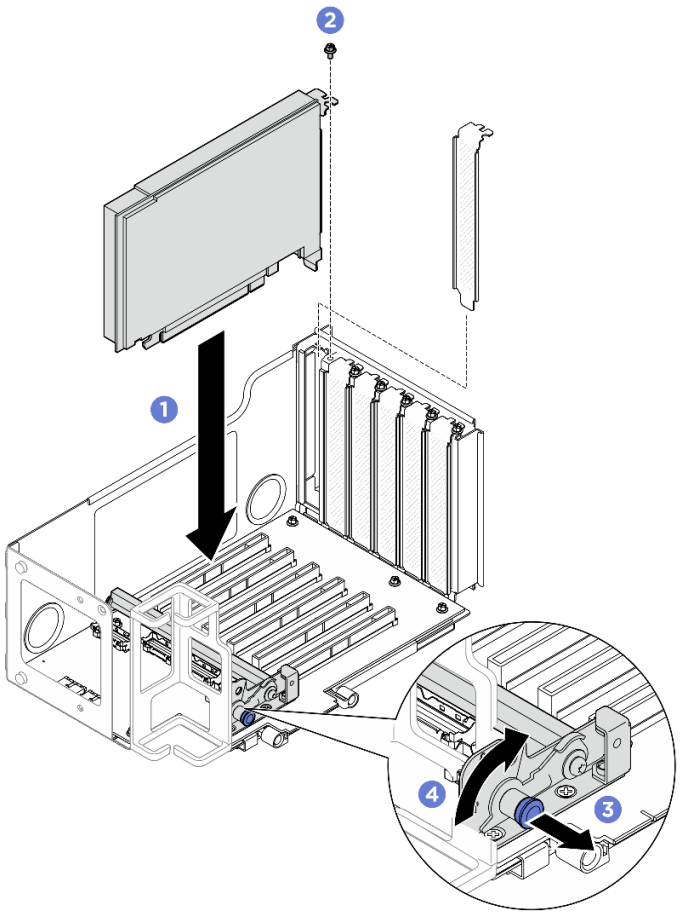

Figure 200. Installing PCIe adapter to riser

a. 1 Align the adapter with the connector on the PCIe riser; then, carefully press the PCIe adapter straight into the slot until it is securely seated and its bracket also is secured.

b. 2 Secure the adapter with a screw.

c. 3 Pull the plunger that secures the PCIe adapter retainer.

d. 4 Close the PCIe adapter retainer to the locked position.

Install PCIe adapter to six slot HH riser

Procedure

Step 1. If a filler has been installed to the slot on the PCIe riser, remove the screw that secures it and remove the filler.

Step 2. Install the PCIe adapter.

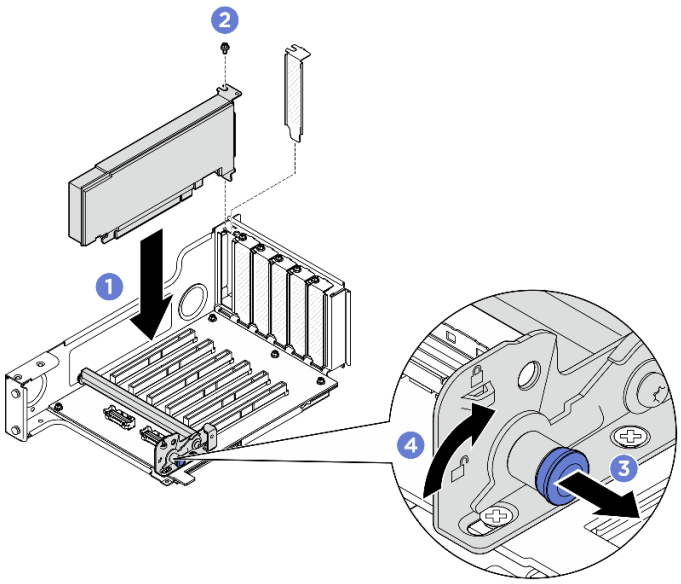

Figure 201. Installing PCIe adapter to riser

a. 1 Align the adapter with the connector on the PCIe riser; then, carefully press the PCIe adapter straight into the slot until it is securely seated and its bracket also is secured.
b. 2 Secure the adapter with a screw.
c. 3 Pull the plunger that secures the PCIe adapter retainer.
d. 4 Close the PCIe adapter retainer to the locked position.

After you finish

1. Reinstall the PCIe risers. See "Install the PCIe riser" on page 261.
2. Reinstall the crossbar. See "Install the crossbar" on page 128.
3. Reinstall the rear top cover. See "Install the rear top cover" on page 373.
4. Reinstall the front top cover. See "Install the front top cover" on page 375.
5. Complete the parts replacement. See "Complete the parts replacement" on page 382.

Demo video

Watch the procedure on YouTube

Install the PCIe riser

Follow the instructions in this section to install the PCIe riser.

About this task

Attention:

- Read "Installation Guidelines" on page 45 and "Safety inspection checklist" on page 46 to ensure that you work safely.
- Power off the server and peripheral devices and disconnect the power cords and all external cables. See "Power off the server" on page 61.

- Prevent exposure to static electricity, which might lead to system halt and loss of data, by keeping static-sensitive components in their static-protective packages until installation, and handling these devices with an electrostatic-discharge wrist strap or other grounding system.

Note: For more details on the different types of risers, see “Rear view” on page 28.

Depending on your configuration, follow the corresponding procedures below for proper installation procedure.

- “Install PCIe riser 3” on page 262
- “Install PCIe riser 1” on page 263
- “Install PCIe riser 2” on page 264

Firmware and driver download: You might need to update the firmware or driver after replacing a component.

- Go to https://datacentersupport.lenovo.com/products/servers/thinksystem/sr860v4/7djn/downloads/driver-list to see the latest firmware and driver updates for your server.
- Go to “Update the firmware” on page 386 for more information on firmware updating tools.

Install PCIe riser 3

Procedure

Step 1. If necessary, install the PCIe adapters. See “Install a PCIe adapter” on page 257.

Step 2. If a PCIe riser filler has been installed, remove it.

Step 3. Install PCIe riser 3.

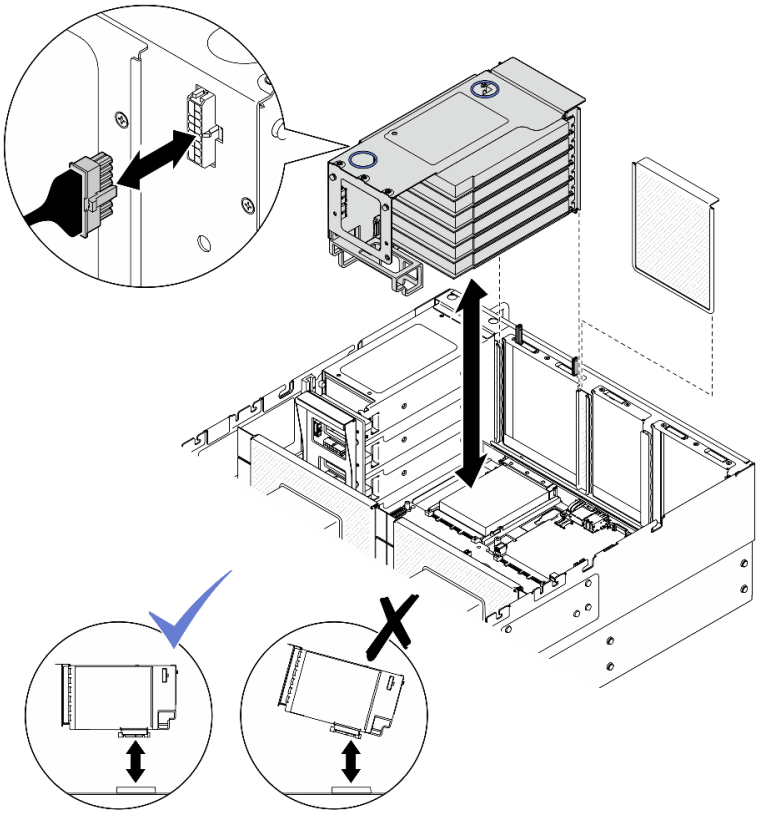

Figure 202. Installing PCIe riser 3

a. Connect all internal cables to the PCIe adapters.

b. For the six-slot FH riser, route all internal cables through the cable retainer as shown below.

Riser 3 cables to system board assembly RAID/HBA to backplane 2 or 5	RAID/HBA to flash power module 1, 2, 3, or 4 RAID/HBA to backplane 1, 3, 4, or 6
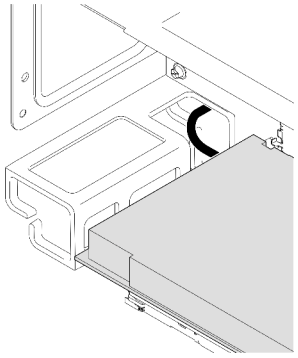	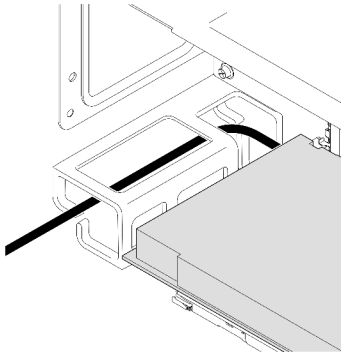

c. Align and install the PCIe riser until it rests firmly on top of the kickstands; then, connect the power cable to the PCIe riser.

d. Connect the PCIe riser 3 assembly cables to the system board assembly, backplanes, and flash power modules (if needed). See ***Internal Cable Routing Guide*** for more information on the internal cable routing.

Install PCIe riser 1

Procedure

Step 1. If necessary, install the PCIe adapters. See “Install a PCIe adapter” on page 257.

Step 2. If a PCIe riser filler has been installed, remove it.

Step 3. Install PCIe riser 1.

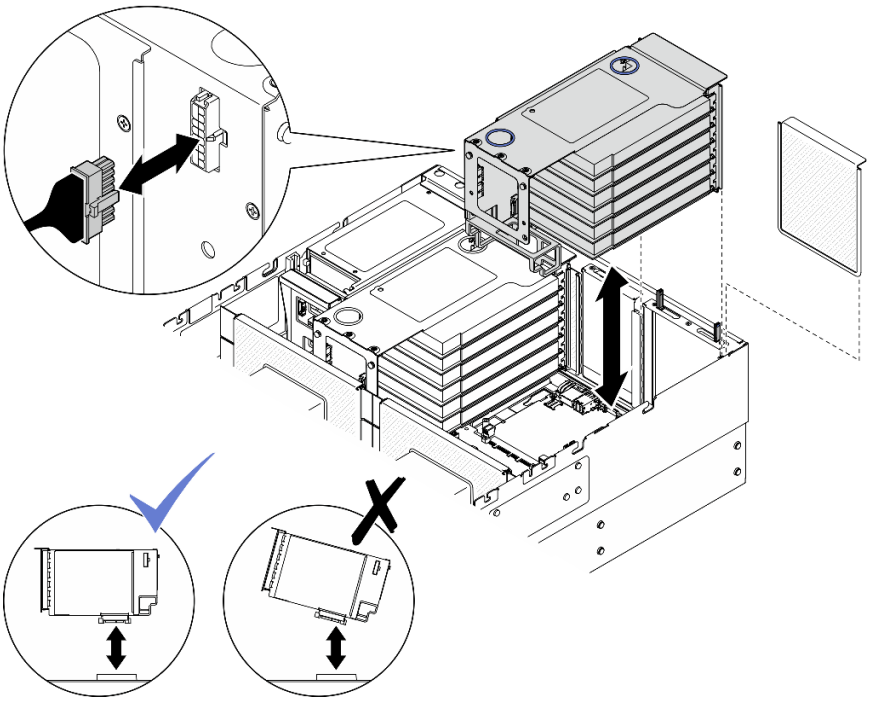

Figure 203. Installing PCIe riser 1

a. Connect all internal cables to the PCIe adapters.

b. For the six-slot FH riser, route all internal cables through the cable retainer as shown below.

RAID/HBA to flash power module 1 or 2 **RAID/HBA to backplane 1, 3, 4, or 6**	**Riser 1 cables to system board assembly** **RAID/HBA to flash power module 3 or 4** **RAID/HBA to backplane 2 or 5**
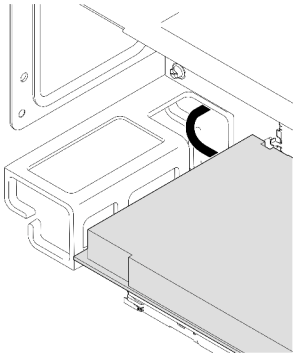	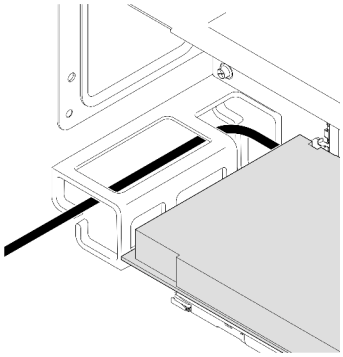

c. Align and install the PCIe riser until it rests firmly on top of the kickstands; then, connect the power cable to the PCIe riser.

d. Connect the PCIe riser 1 assembly cables to the system board assembly, backplanes, and flash power modules (if needed). See ***Internal Cable Routing Guide*** for more information on the internal cable routing.

Install PCIe riser 2

Procedure

Step 1. If necessary, install the PCIe adapters. See “Install a PCIe adapter” on page 257.

Step 2. If a PCIe riser filler has been installed, remove it.

Step 3. Install PCIe riser 2.

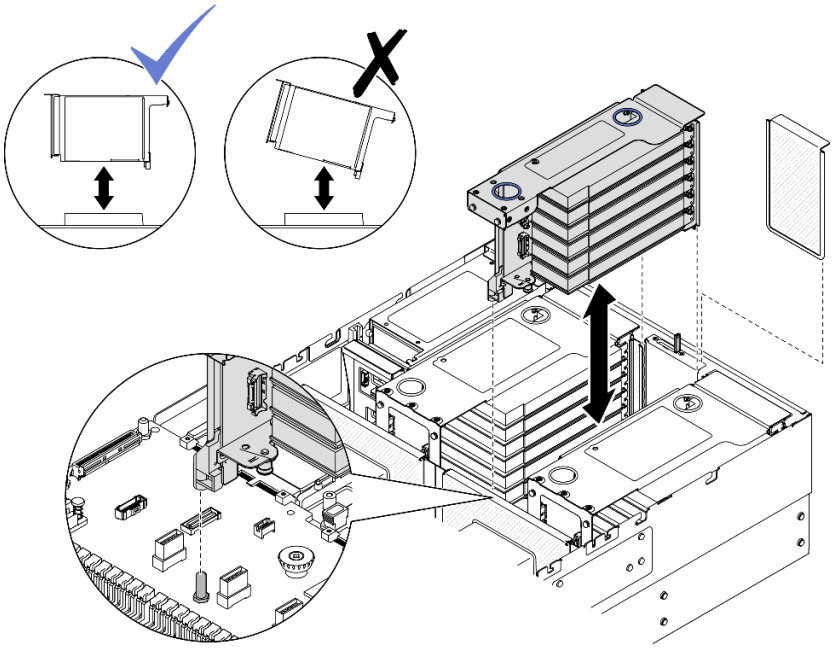

Figure 204. Installing PCIe riser 2

a. Connect all internal cables to the PCIe adapters.

b. Align and install the PCIe riser until it rests firmly on top of the kickstand.

c. Connect the PCIe riser 2 assembly cables to the system board assembly, backplanes, and flash power modules (if needed). See ***Internal Cable Routing Guide*** for more information on the internal cable routing.

After you finish

1. Reinstall the crossbar. See “Install the crossbar” on page 128.
2. Reinstall the rear top cover. See “Install the rear top cover” on page 373.
3. Reinstall the front top cover. See “Install the front top cover” on page 375.
4. Complete the parts replacement. See “Complete the parts replacement” on page 382.

Demo video

Watch the procedure on YouTube

PCIe riser card and cage replacement

Follow the instructions in this section to remove and install a PCIe riser card and cage.

Remove a PCIe riser card and cage

Follow the instructions in this section to remove a PCIe riser card and cage.

About this task

S002

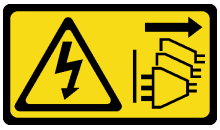

CAUTION:
The power-control button on the device and the power switch on the power supply do not turn off the electrical current supplied to the device. The device also might have more than one power cord. To remove all electrical current from the device, ensure that all power cords are disconnected from the power source.

Attention:

- Read "Installation Guidelines" on page 45 and "Safety inspection checklist" on page 46 to ensure that you work safely.
- Power off the server and peripheral devices and disconnect the power cords and all external cables. See "Power off the server" on page 61.
- Prevent exposure to static electricity, which might lead to system halt and loss of data, by keeping static-sensitive components in their static-protective packages until installation, and handling these devices with an electrostatic-discharge wrist strap or other grounding system.

Note: For more details on the different types of risers, see "Rear view" on page 28.

Depending on your configuration, follow the corresponding procedures below for proper removal procedure.

- "Remove the two-slot FH riser card and cage" on page 266
- "Remove the six-slot FH riser card and cage" on page 267
- "Remove the six-slot HH riser card and cage" on page 270

Remove the two-slot FH riser card and cage

Procedure

Step 1. If the server is installed in a rack, slide the server out on its rack slide rails to gain access to the top covers, or remove the server from the rack. See "Server replacement" on page 67.

Step 2. Remove the front top cover. See "Remove the front top cover" on page 369.

Step 3. Remove the rear top cover. See "Remove the rear top cover" on page 371.

Step 4. Remove the crossbar. See "Remove the crossbar" on page 125.

Step 5. Remove the PCIe riser. See "Remove the PCIe riser" on page 249.

Step 6. Remove all the PCIe adapters. See "Remove a PCIe adapter" on page 253.

Step 7. Remove the five screws that secure the PCIe riser card; then, remove the PCIe riser card from the PCIe riser cage.

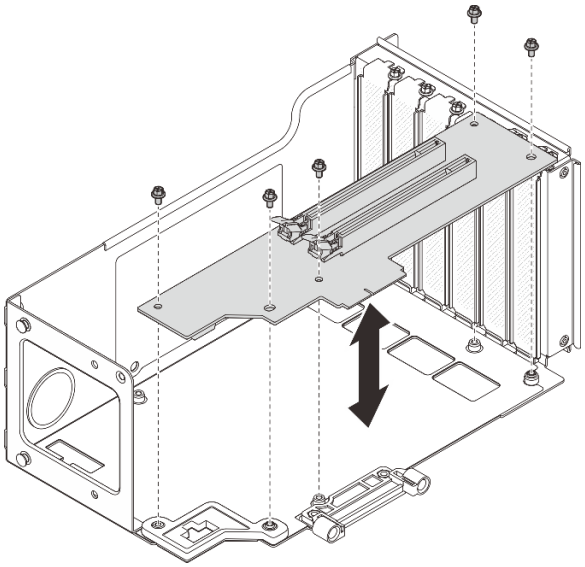

Figure 205. Removing PCIe riser card from riser cage

Step 8. If necessary, remove the connector guide from the PCIe riser cage.

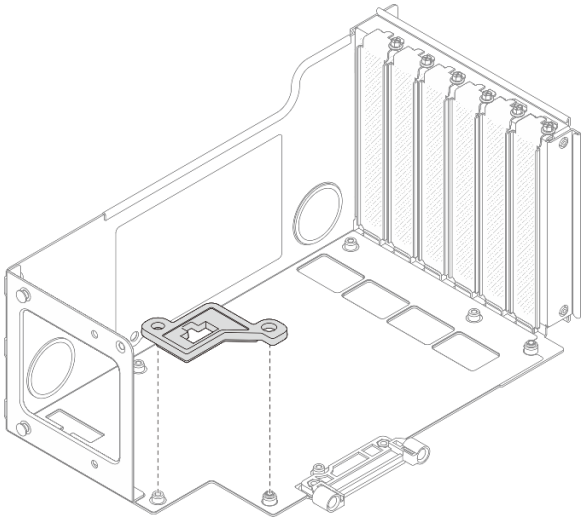

Figure 206. Removing connector guide from riser cage

Remove the six-slot FH riser card and cage

Procedure

Step 1. If the server is installed in a rack, slide the server out on its rack slide rails to gain access to the top covers, or remove the server from the rack. See “Server replacement” on page 67.

Step 2. Remove the front top cover. See “Remove the front top cover” on page 369.

Step 3. Remove the rear top cover. See “Remove the rear top cover” on page 371.

Step 4. Remove the crossbar. See “Remove the crossbar” on page 125.

Step 5. Remove the PCIe riser. See “Remove the PCIe riser” on page 249.

Step 6. Remove all the PCIe adapters. See “Remove a PCIe adapter” on page 253.

Step 7. If there is an M.2 drive cage assembly installed, remove it. “Remove the rear M.2 drive cage and M.2 boot adapter” on page 332.

Step 8. Remove the two screws from the cover of the riser cage.

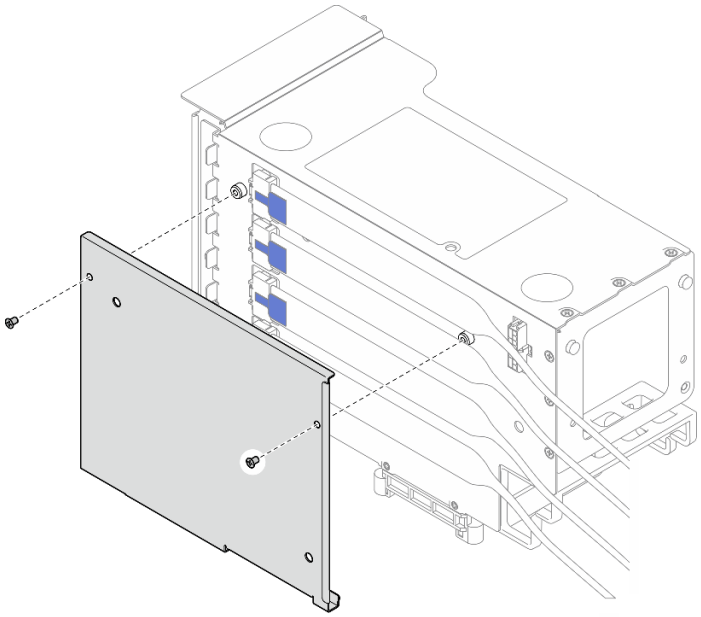

Figure 207. Removing cover from riser cage

Step 9. Disconnect all the PCIe cables from the outside of the PCIe riser.

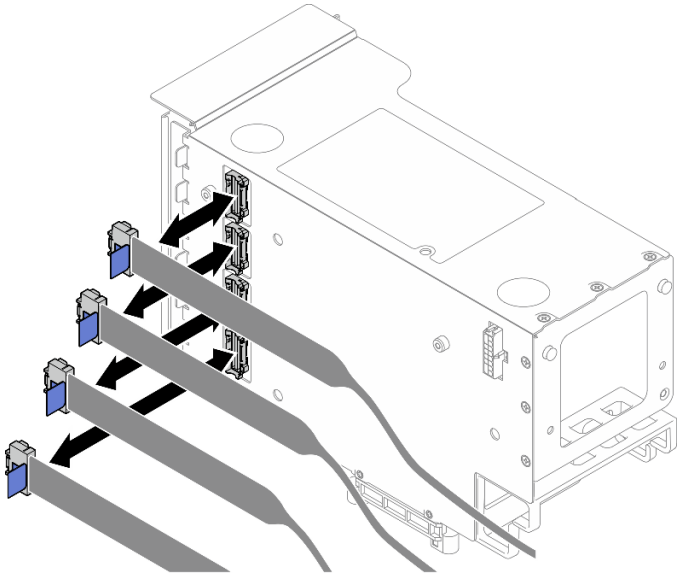

Figure 208. Disconnecting PCIe cables from outside of riser

Step 10. Disconnect all the PCIe cables from the inside of the PCIe riser.

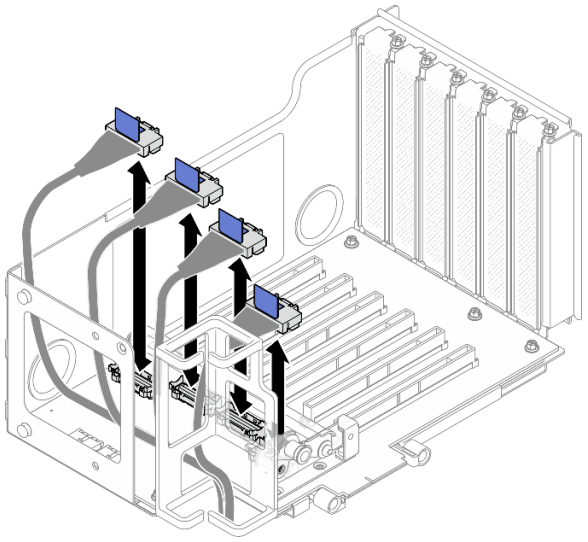

Figure 209. Disconnecting PCIe cables from inside of riser

Step 11. Remove the three screws that secure the PCIe retainer; then remove the PCIe retainer.

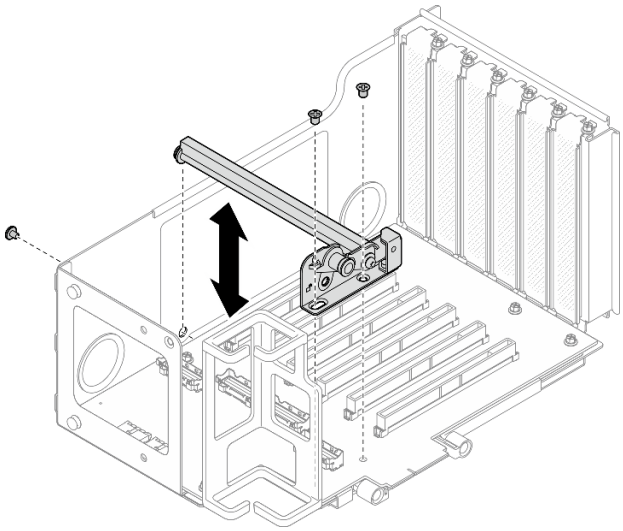

Figure 210. Removing PCIe retainer from riser cage

Step 12. Remove the six screws that secure the PCIe riser card; then, remove the PCIe riser card from the PCIe riser cage.

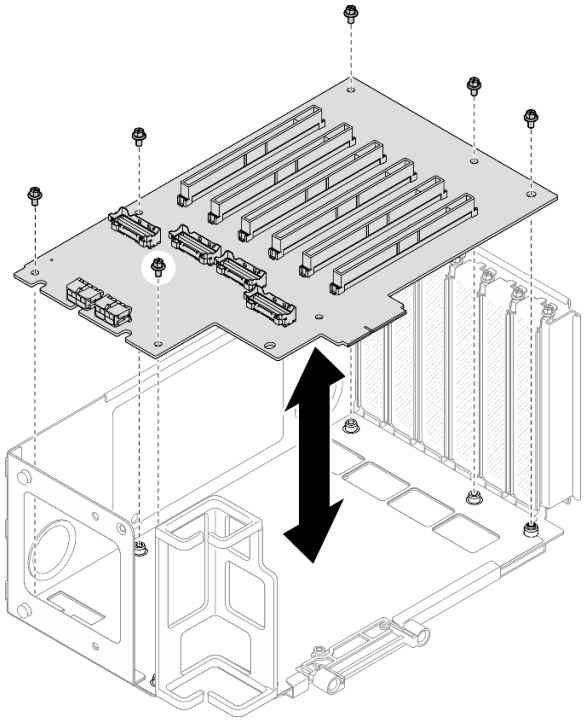

Figure 211. Removing PCIe riser card from riser cage

Step 13. If necessary, remove the PCIe riser cable retainer from the PCIe riser cage.

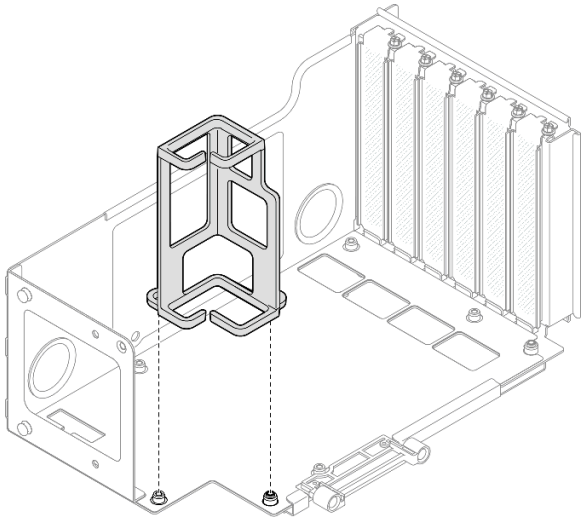

Figure 212. Removing cable retainer from riser cage

Remove the six-slot HH riser card and cage

Procedure

Step 1. If the server is installed in a rack, slide the server out on its rack slide rails to gain access to the top covers, or remove the server from the rack. See “Server replacement” on page 67.

Step 2. Remove the front top cover. See “Remove the front top cover” on page 369.

Step 3. Remove the rear top cover. See “Remove the rear top cover” on page 371.

Step 4. Remove the crossbar. See “Remove the crossbar” on page 125.

Step 5. Remove the PCIe riser. See “Remove the PCIe riser” on page 249.

Step 6. Remove all the PCIe adapters. See “Remove a PCIe adapter” on page 253.

Step 7. Remove the two screws and the cover.

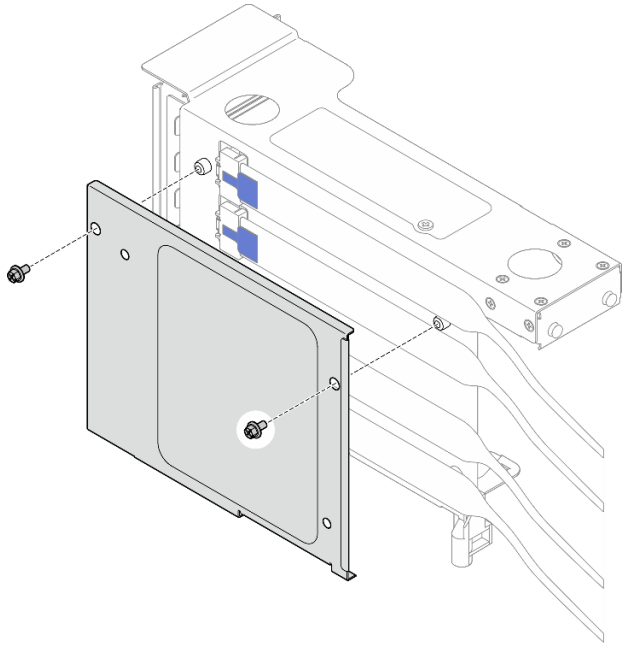

Figure 213. Removing cover from riser cage

Step 8. Disconnect all the PCIe cables from the outside of the PCIe riser.

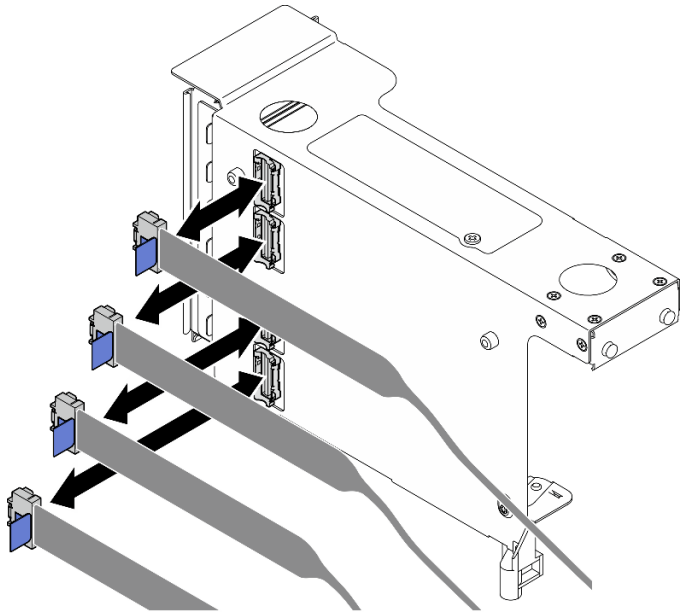

Figure 214. Disconnecting PCIe cables from outside of riser

Step 9. Disconnect all the PCIe cables from the inside of the PCIe riser.

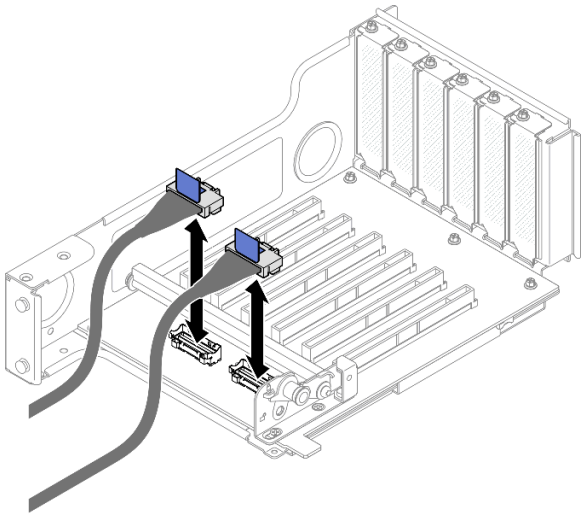

Figure 215. Disconnecting PCIe cables from inside of riser

Step 10. Remove the three screws that secure the PCIe retainer; then remove the PCIe retainer.

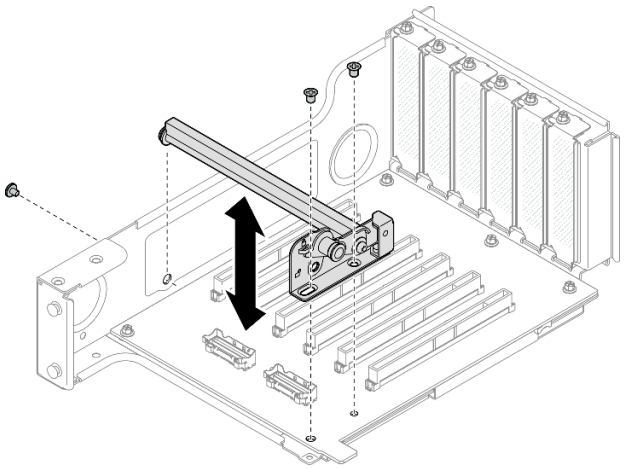

Figure 216. Removing PCIe retainer from riser cage

Step 11. Remove the five screws that secure the PCIe riser card; then, remove the PCIe riser card from the PCIe riser cage.

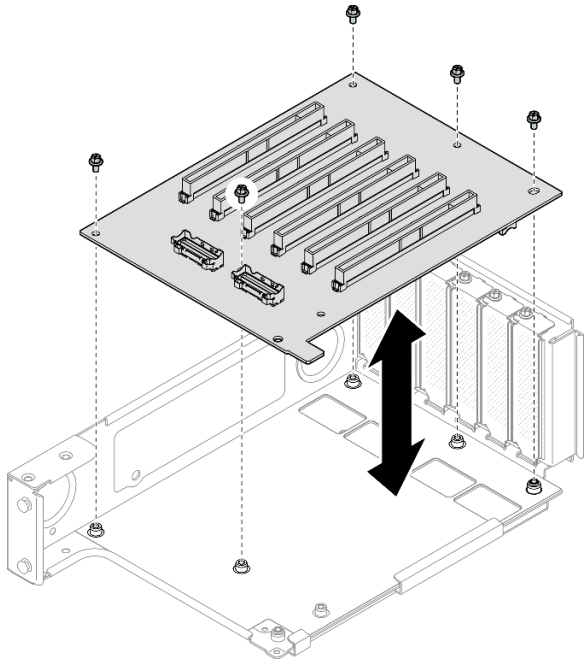

Figure 217. Removing PCIe riser card from riser cage

After you finish

1. If you are replacing a PCIe riser cage and reusing the PCIe riser card, remove the PCIe riser extenders. See “Remove a PCIe riser extender” on page 282.
2. Install a replacement unit. See “Install a PCIe riser card and cage” on page 273.
3. If you are instructed to return the component or optional device, follow all packaging instructions, and use any packaging materials for shipping that are supplied to you.

Demo video

Watch the procedure on YouTube

Install a PCIe riser card and cage

Follow the instructions in this section to install a PCIe riser card and cage.

About this task

S002



CAUTION:
The power-control button on the device and the power switch on the power supply do not turn off the electrical current supplied to the device. The device also might have more than one power cord. To remove all electrical current from the device, ensure that all power cords are disconnected from the power source.

Attention:

- Read “Installation Guidelines” on page 45 and “Safety inspection checklist” on page 46 to ensure that you work safely.
- Power off the server and peripheral devices and disconnect the power cords and all external cables. See “Power off the server” on page 61.
- Prevent exposure to static electricity, which might lead to system halt and loss of data, by keeping static-sensitive components in their static-protective packages until installation, and handling these devices with an electrostatic-discharge wrist strap or other grounding system.

Notes:

- For more details on the different types of risers, see “Rear view” on page 28.
- If you are installing a new riser cage, attach the riser cage label to the rear of the new riser cage if necessary.

Depending on your configuration, follow the corresponding procedures below for proper removal procedure.

- “Install the two-slot FH riser card and cage” on page 274
- “Install the six-slot FH riser card and cage” on page 275
- “Install the six-slot HH riser card and cage” on page 279

Firmware and driver download: You might need to update the firmware or driver after replacing a component.

- Go to https://datacentersupport.lenovo.com/products/servers/thinksystem/sr860v4/7djn/downloads/driver-list to see the latest firmware and driver updates for your server.
- Go to “Update the firmware” on page 386 for more information on firmware updating tools.

Install the two-slot FH riser card and cage

Procedure

Step 1. If necessary, install the PCIe riser extenders. See “Install a PCIe riser extender” on page 285.

Step 2. If necessary, align and install the connector guide into the PCIe riser cage.

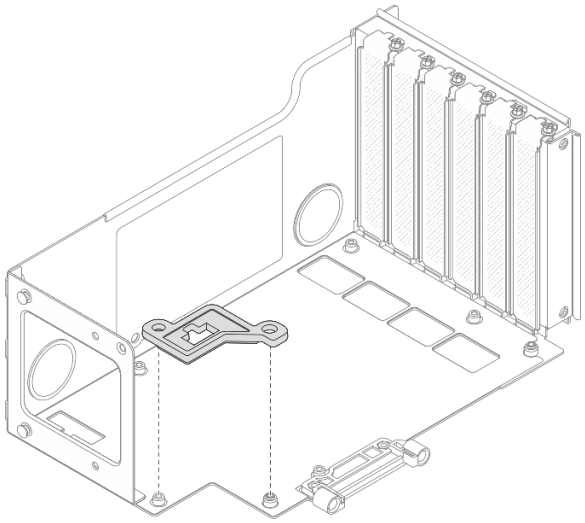

Figure 218. Installing connector guide to riser cage

Step 3. Align the screw holes in the PCIe riser card with the screw holes in the PCIe riser cage; then, install five screws to secure the PCIe riser card.

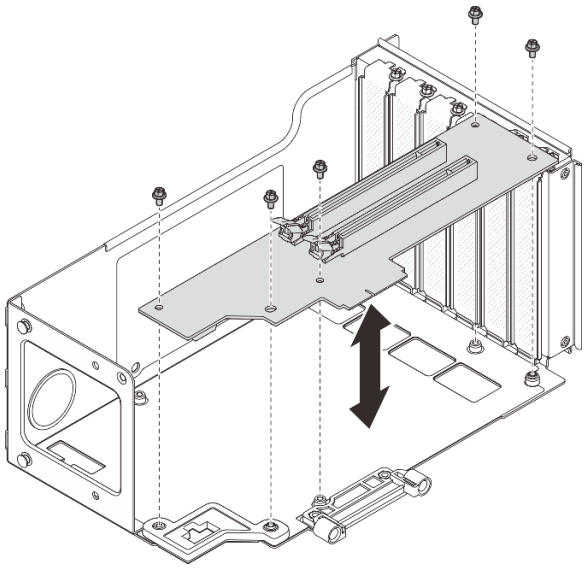

Figure 219. Installing PCIe riser card to riser cage

Install the six-slot FH riser card and cage

Procedure

Step 1. If necessary, install the PCIe riser extenders. See "Install a PCIe riser extender" on page 285.

Step 2. If necessary, align and install the cable retainer into the PCIe riser cage.

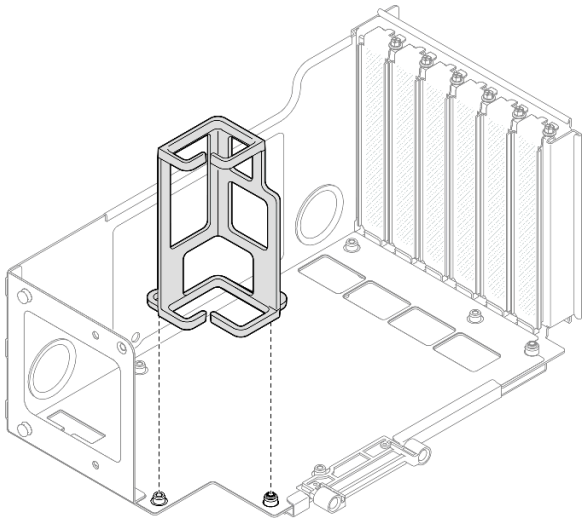

Figure 220. Installing cable retainer to riser cage

Step 3. Align the screw holes in the PCIe riser card with the screw holes in the PCIe riser cage; then, install six screws to secure the PCIe riser card.

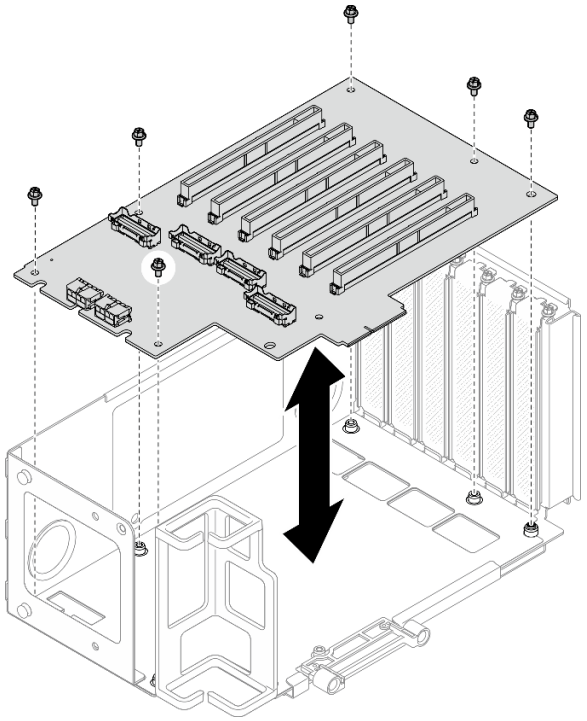

Figure 221. Installing PCIe riser card to riser cage

Step 4. Install the PCIe retainer into the PCIe riser cage; then, install three screws to secure the PCIe retainer.

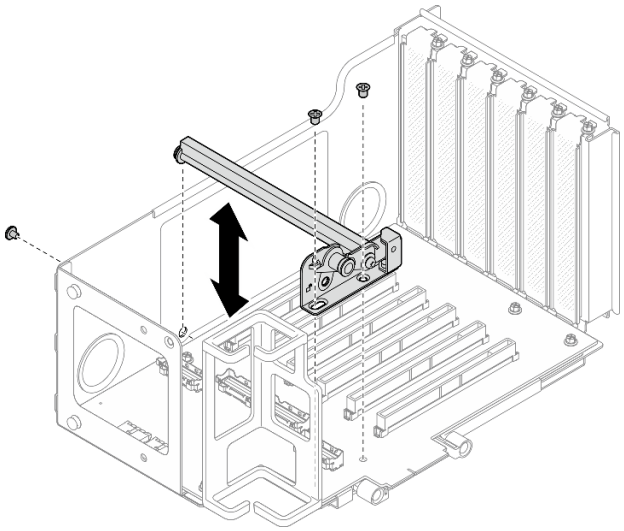

Figure 222. Installing PCIe retainer to riser cage

Step 5. Connect the riser cables to the corresponding connectors on the inside of the PCIe riser card.

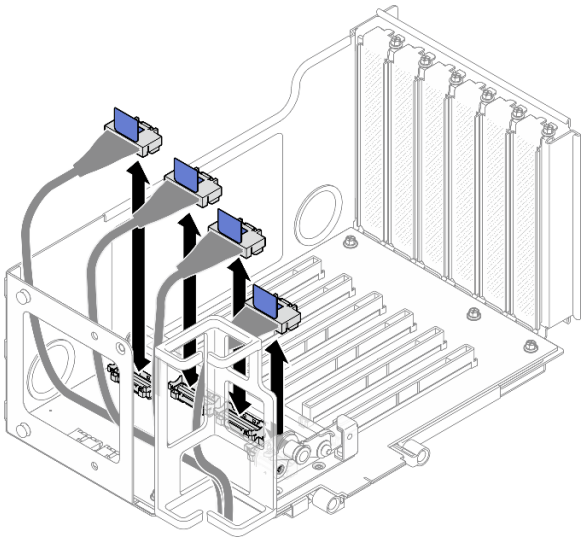

Figure 223. Connecting PCIe riser cables to inside of riser

Step 6. Route the PCIe riser cables through the cable retainer as shown below.

Routing cable in PCIe riser 3	**Routing cable in PCIe riser 1**
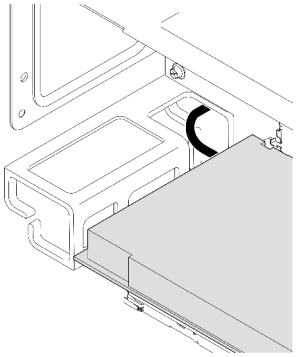	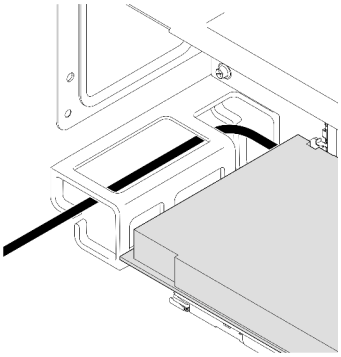

Step 7. If necessary, remove the two screws and the cover.

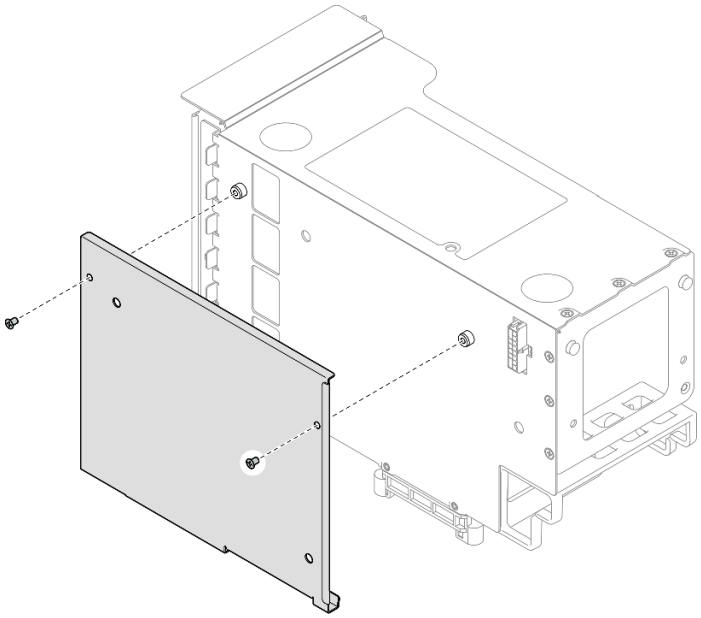

Figure 224. Removing cover from riser cage

Step 8. Connect the riser cables to the corresponding connectors on the outside of the PCIe riser.

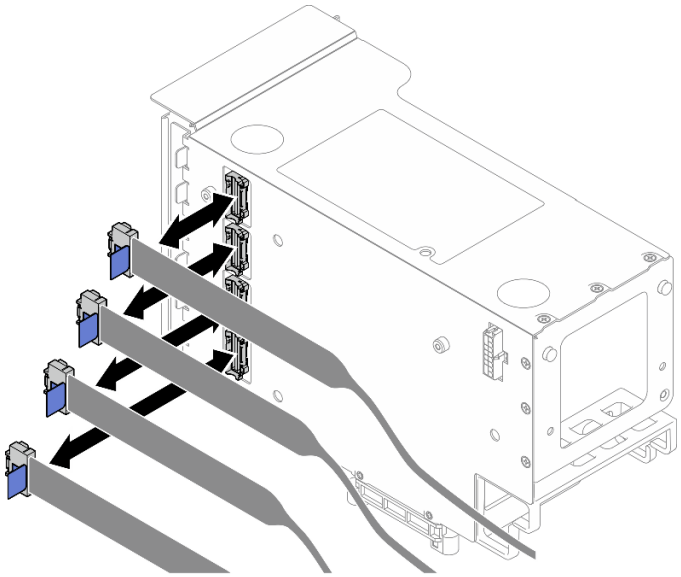

Figure 225. Connecting PCIe riser cables to outside of riser

Step 9. Install the cover onto the PCIe riser cage; then, install two screws to secure the cover.

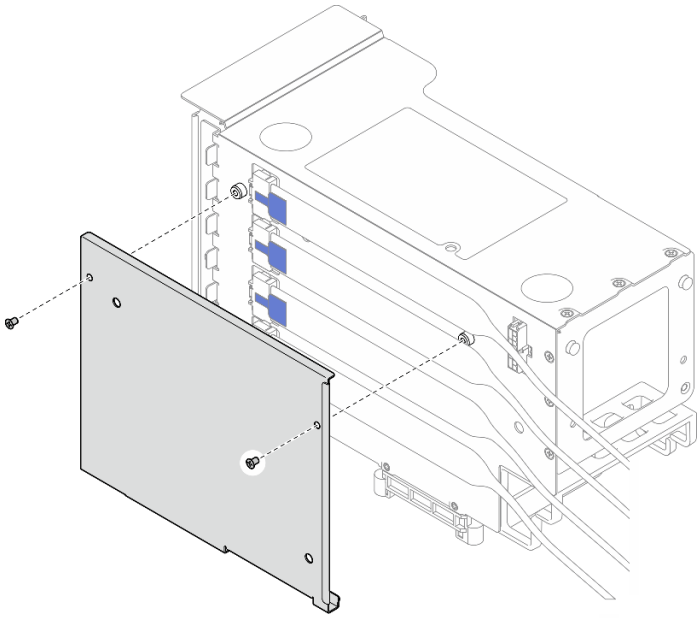

Figure 226. Installing cover to riser cage

Install the six-slot HH riser card and cage

Procedure

Step 1. If necessary, install the PCIe riser extenders. See “Install a PCIe riser extender” on page 285.

Step 2. Align the screw holes in the PCIe riser card with the screw holes in the PCIe riser cage; then, install five screws to secure the PCIe riser card.

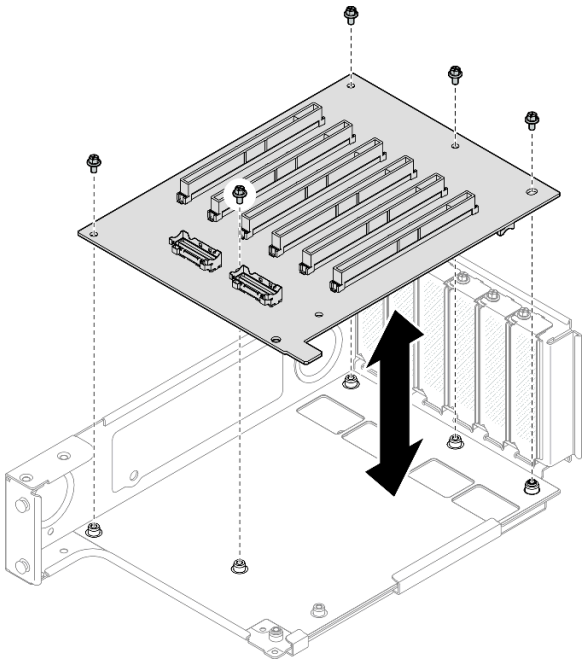

Figure 227. Installing PCIe riser card to riser cage

Step 3. Install the PCIe retainer into the PCIe riser cage; then, install three screws to secure the PCIe retainer.

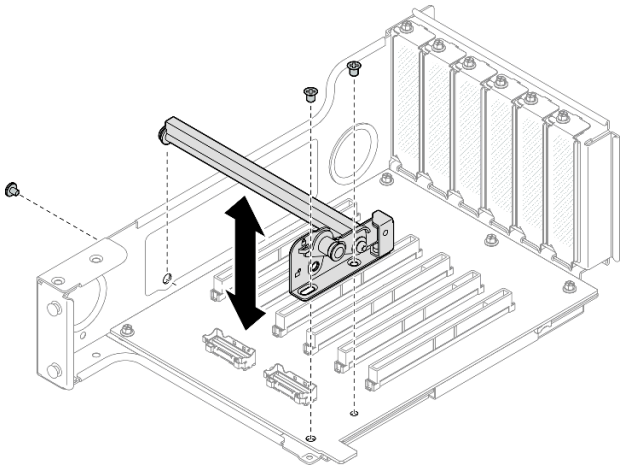

Figure 228. Installing PCIe retainer to riser cage

Step 4. Connect the PCIe riser cables to the corresponding connectors on the inside of the PCIe riser.

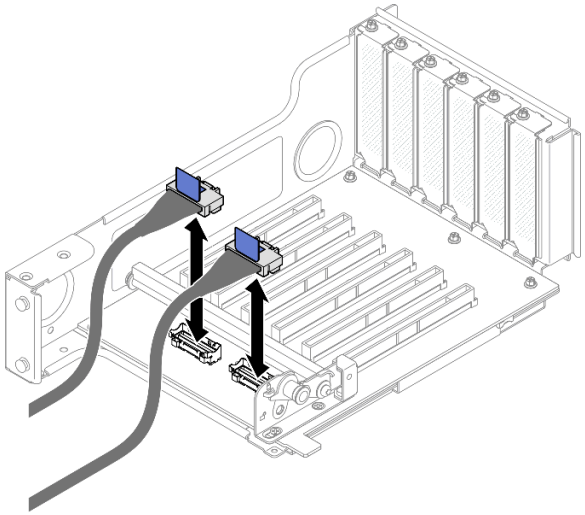

Figure 229. Connecting PCIe riser cables to inside of riser

Step 5. If necessary, remove the two screws and the cover.

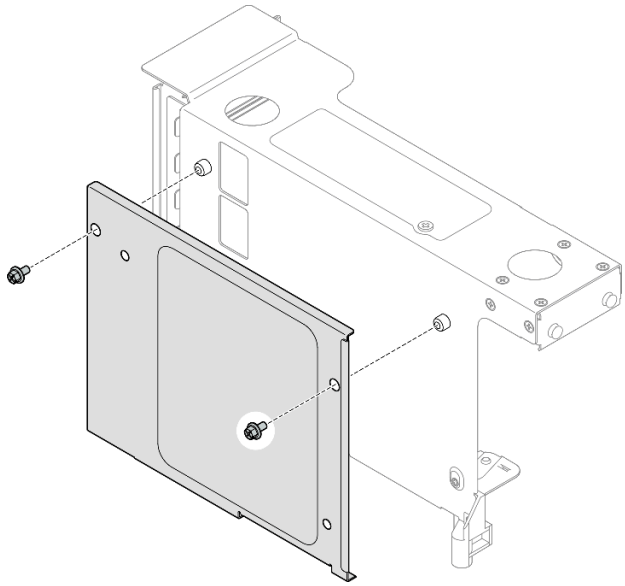

Figure 230. Removing cover from riser cage

Step 6. Connect the PCIe riser cables to the corresponding connectors on the outside of the PCIe riser.

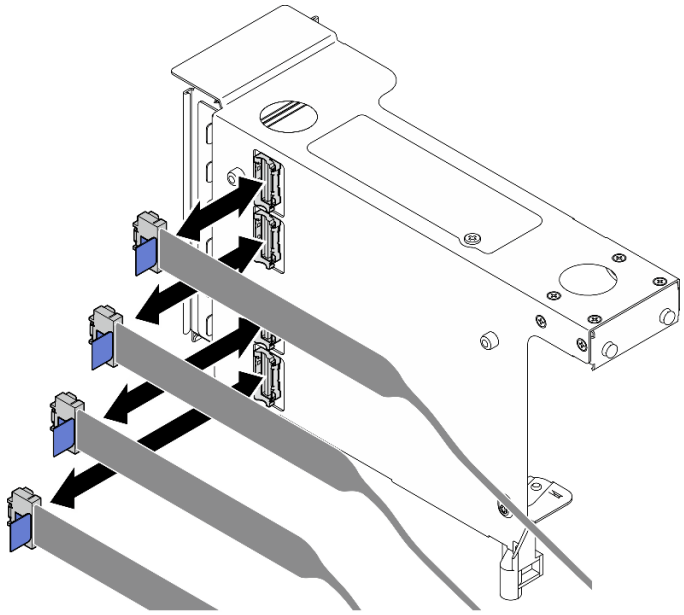

Figure 231. Connecting PCIe riser cables to outside of riser

Step 7. Install the cover onto the PCIe riser cage; then, install two screws to secure the cover.

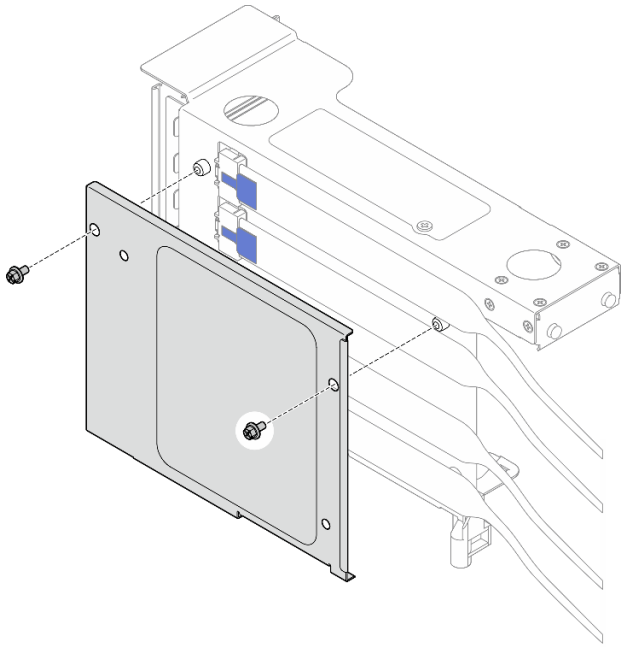

Figure 232. Installing cover to riser cage

After you finish

1. Reinstall the PCIe adapters. See “Install a PCIe adapter” on page 257.
2. Reinstall the rear M.2 drive cage if you have removed it. See “Install the rear M.2 drive cage and M.2 boot adapter” on page 336.
3. Reinstall the PCIe risers. See “Install the PCIe riser” on page 261.
4. Reinstall the crossbar. See “Install the crossbar” on page 128.
5. Reinstall the rear top cover. See “Install the rear top cover” on page 373.
6. Reinstall the front top cover. See “Install the front top cover” on page 375.
7. Complete the parts replacement. See “Complete the parts replacement” on page 382.

Demo video

Watch the procedure on YouTube

PCIe riser extender replacement

Follow the instructions in this section to remove and install a PCIe riser extender.

Remove a PCIe riser extender

Follow the instructions in this section to remove a PCIe riser extender.

About this task

S002

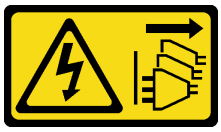

CAUTION:
The power-control button on the device and the power switch on the power supply do not turn off the electrical current supplied to the device. The device also might have more than one power cord. To remove all electrical current from the device, ensure that all power cords are disconnected from the power source.

Attention:

- Read “Installation Guidelines” on page 45 and “Safety inspection checklist” on page 46 to ensure that you work safely.
- Power off the server and peripheral devices and disconnect the power cords and all external cables. See “Power off the server” on page 61.
- Prevent exposure to static electricity, which might lead to system halt and loss of data, by keeping static-sensitive components in their static-protective packages until installation, and handling these devices with an electrostatic-discharge wrist strap or other grounding system.

Note: For more details on the different types of risers, see “Rear view” on page 28.

Depending on your configuration, follow the corresponding procedures below for proper removal procedure.

- “Remove the riser extender from the FH riser cage” on page 283
- “Remove the riser extender from the HH riser cage” on page 284

Remove the riser extender from the FH riser cage

Procedure

Step 1. If the server is installed in a rack, slide the server out on its rack slide rails to gain access to the top covers, or remove the server from the rack. See “Server replacement” on page 67.

Step 2. Remove the front top cover. See “Remove the front top cover” on page 369.

Step 3. Remove the rear top cover. See “Remove the rear top cover” on page 371.

Step 4. Remove the crossbar. See “Remove the crossbar” on page 125.

Step 5. Remove the PCIe riser. See “Remove the PCIe riser” on page 249.

Step 6. If necessary, remove all the PCIe adapters. See “Remove a PCIe adapter” on page 253.

Step 7. Removing the riser extender from the FH PCIe riser cage.

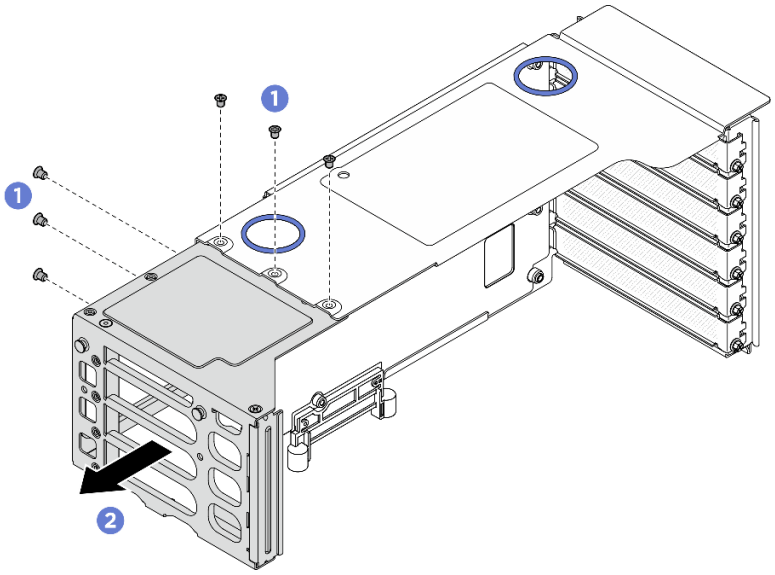

Figure 233. Removing riser extender from FH PCIe riser cage

a. 1 Remove the six screws that secure the PCIe riser extender.

b. 2 Remove the PCIe riser extender from the PCIe riser cage.

Remove the riser extender from the HH riser cage

Procedure

Step 1. If the server is installed in a rack, slide the server out on its rack slide rails to gain access to the top covers, or remove the server from the rack. See “Server replacement” on page 67.

Step 2. Remove the front top cover. See “Remove the front top cover” on page 369.

Step 3. Remove the rear top cover. See “Remove the rear top cover” on page 371.

Step 4. Remove the crossbar. See “Remove the crossbar” on page 125.

Step 5. Remove the PCIe riser. See “Remove the PCIe riser” on page 249.

Step 6. If necessary, remove all the PCIe adapters. See “Remove a PCIe adapter” on page 253.

Step 7. Remove the PCIe riser extender.

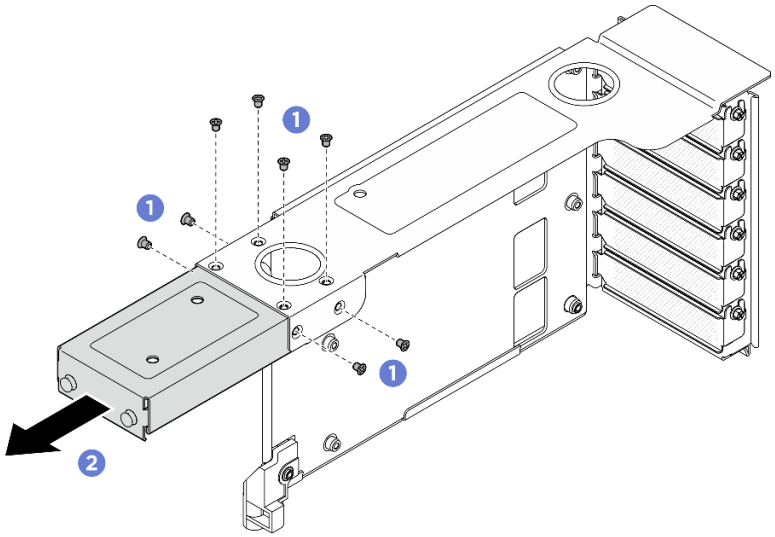

Figure 234. Removing riser extender from HH PCIe riser cage

a. 1 Remove the eight screws that secure the PCIe riser extender.
b. 2 Remove the PCIe riser extender from the PCIe riser cage.

After you finish

1. Install a replacement unit. See "Install a PCIe riser extender" on page 285.
2. If you are instructed to return the component or optional device, follow all packaging instructions, and use any packaging materials for shipping that are supplied to you.

Demo video

Watch the procedure on YouTube

Install a PCIe riser extender

Follow the instructions in this section to install a PCIe riser extender.

About this task

S002



CAUTION:
The power-control button on the device and the power switch on the power supply do not turn off the electrical current supplied to the device. The device also might have more than one power cord. To remove all electrical current from the device, ensure that all power cords are disconnected from the power source.

Attention:

- Read “Installation Guidelines” on page 45 and “Safety inspection checklist” on page 46 to ensure that you work safely.
- Power off the server and peripheral devices and disconnect the power cords and all external cables. See “Power off the server” on page 61.
- Prevent exposure to static electricity, which might lead to system halt and loss of data, by keeping static-sensitive components in their static-protective packages until installation, and handling these devices with an electrostatic-discharge wrist strap or other grounding system.

Note: For more details on the different types of risers, see “Rear view” on page 28.

Depending on your configuration, follow the corresponding procedures below for proper removal procedure.

- “Install the riser extender to the FH riser cage” on page 286
- “Install the riser extender to the HH riser cage” on page 287

Install the riser extender to the FH riser cage

Procedure

Step 1. If a filler is installed, remove it.

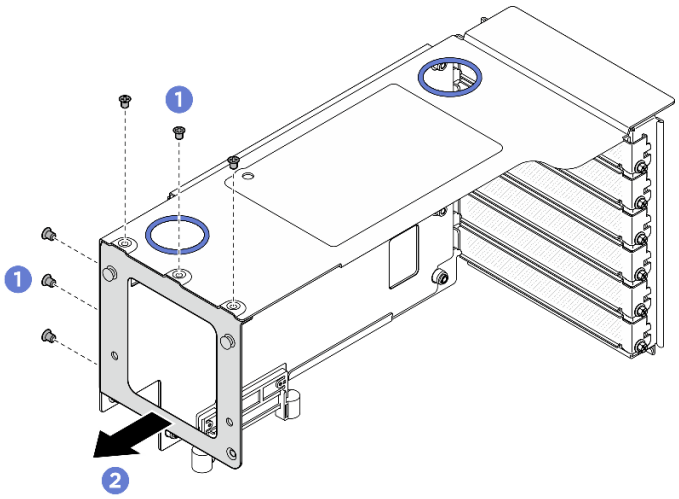

Figure 235. Removing filler from FH PCIe riser cage

a. 1 Remove the six screws that secure the filler.
b. 2 Remove the filler from the PCIe riser cage.

Step 2. Install the PCIe riser extender.

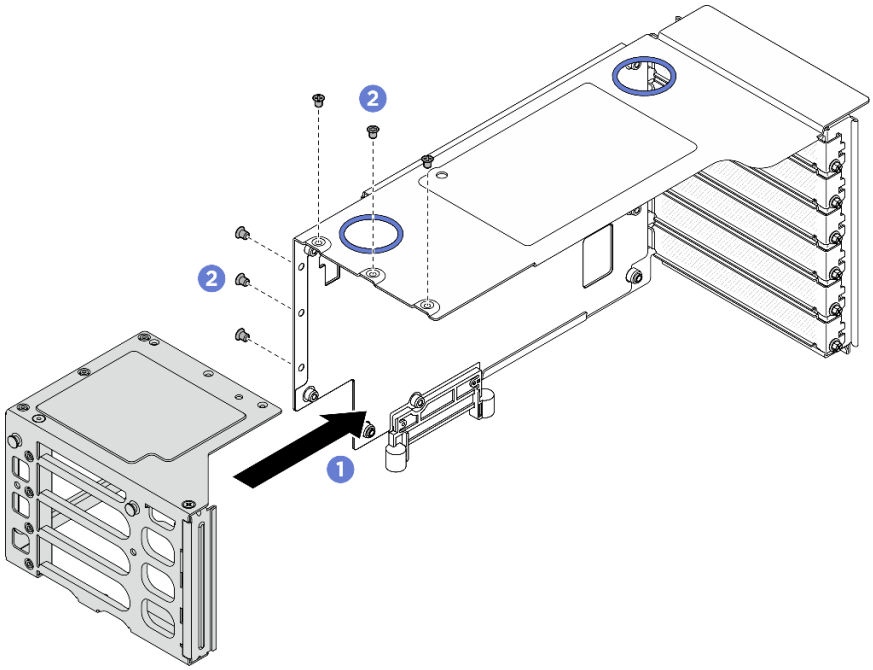

Figure 236. Installing PCIe riser extender to FH PCIe riser

a. 1 Align the screw holes on the PCIe riser extender with the screw holes in the PCIe riser cage.
b. 2 Install six screws to secure the PCIe riser extender.

Install the riser extender to the HH riser cage

Procedure

Step 1. If a filler is installed, remove it.

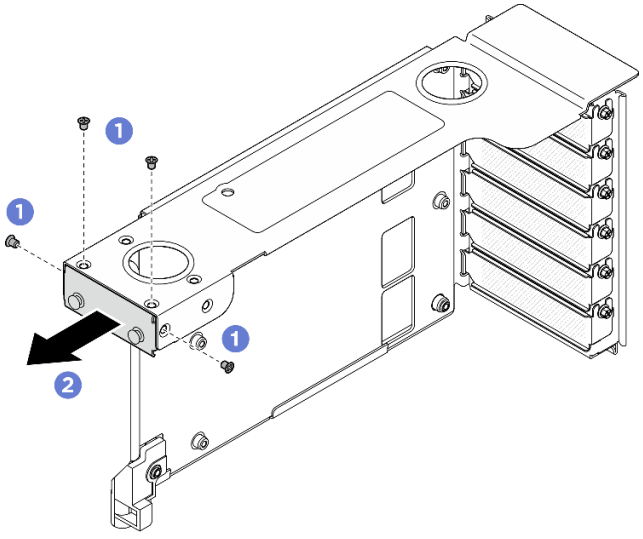

Figure 237. Removing filler from FH PCIe riser

a. 1 Remove the four screws that secure the filler.
b. 2 Remove the filler from the PCIe riser cage.

Step 2. Install the PCIe riser extender.

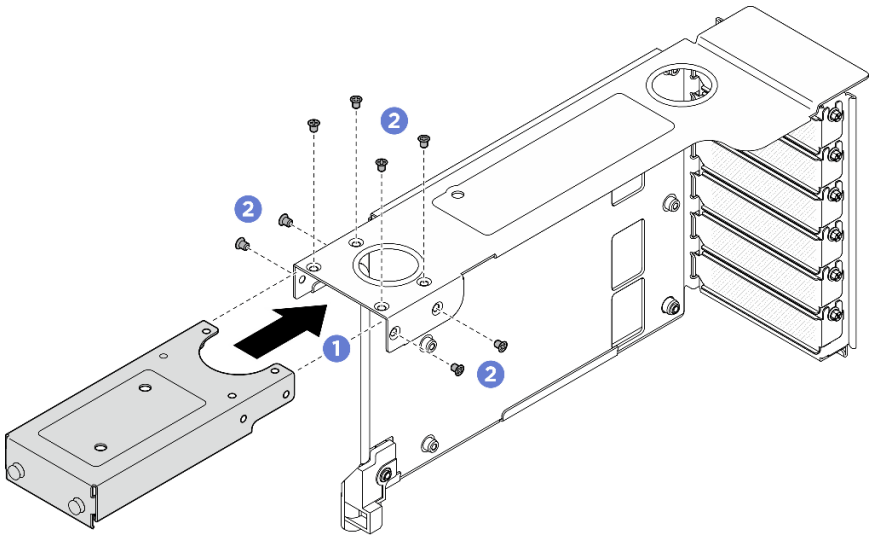

Figure 238. Installing PCIe riser extender to FH PCIe riser

a. 1 Align the screw holes on the PCIe riser extender with the screw holes in the PCIe riser cage.
b. 2 Install eight screws to secure the PCIe riser extender.

After you finish

1. Reinstall the PCIe adapters. See “Install a PCIe adapter” on page 257.
2. Reinstall the PCIe risers. See “Install the PCIe riser” on page 261.
3. Reinstall the crossbar. See “Install the crossbar” on page 128.
4. Reinstall the rear top cover. See “Install the rear top cover” on page 373.
5. Reinstall the front top cover. See “Install the front top cover” on page 375.
6. Complete the parts replacement. See “Complete the parts replacement” on page 382.

Demo video

Watch the procedure on YouTube

Power distribution board replacement

Follow the instructions in this section to remove or install the power distribution board.

Remove the power distribution board

Follow the instructions in this section to remove the power distribution board.

About this task

S002

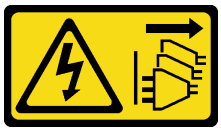

CAUTION:
The power-control button on the device and the power switch on the power supply do not turn off the electrical current supplied to the device. The device also might have more than one power cord. To remove all electrical current from the device, ensure that all power cords are disconnected from the power source.

S029



DANGER

For -48V dc power supply, electrical current from power cords is hazardous.
To avoid a shock hazard:

- **To connect or disconnect -48V dc power cords when you need to remove/install redundancy power supply unit(s).**

To Connect:

1. Turn OFF subject dc power source(s) and equipment (s) that are attached to this product.
2. Install the power supply unit(s) into the system housing.
3. Attach dc power cord(s) to the product.
   - Ensure correct polarity of -48 V dc connections: RTN is + and -Vin (typical -48 V) dc is -. Earth ground should be connected very well.
4. Connect dc power cord(s) to subject power source (s).
5. Turn ON all the power source(s).

To Disconnect:

1. Disconnect or turn off the subject dc power source(s) (at the breaker panel) before removing the power supply unit(s).
2. Remove the subject dc cord(s) and make sure the wire terminal of power cord(s) is insulated.
3. Unplug the subject power supply unit(s) from the system housing.

S035

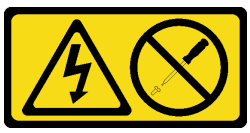

CAUTION:
Never remove the cover on a power supply or any part that has this label attached. Hazardous voltage, current, and energy levels are present inside any component that has this label attached. There are no serviceable parts inside these components. If you suspect a problem with one of these parts, contact a service technician.

Attention:

- Read “Installation Guidelines” on page 45 and “Safety inspection checklist” on page 46 to ensure that you work safely.
- Power off the server and peripheral devices and disconnect the power cords and all external cables. See “Power off the server” on page 61.
- Prevent exposure to static electricity, which might lead to system halt and loss of data, by keeping static-sensitive components in their static-protective packages until installation, and handling these devices with an electrostatic-discharge wrist strap or other grounding system.

Procedure

Step 1. If the server is installed in a rack, slide the server out on its rack slide rails to gain access to the top covers, or remove the server from the rack. See “Server replacement” on page 67.

Step 2. Remove the front top cover. See “Remove the front top cover” on page 369.

Step 3. Remove the rear top cover. See “Remove the rear top cover” on page 371.

Step 4. Gently pull and disengage every installed power supply unit.

Step 5. Disconnect the sideband and power cables from the power distribution board.

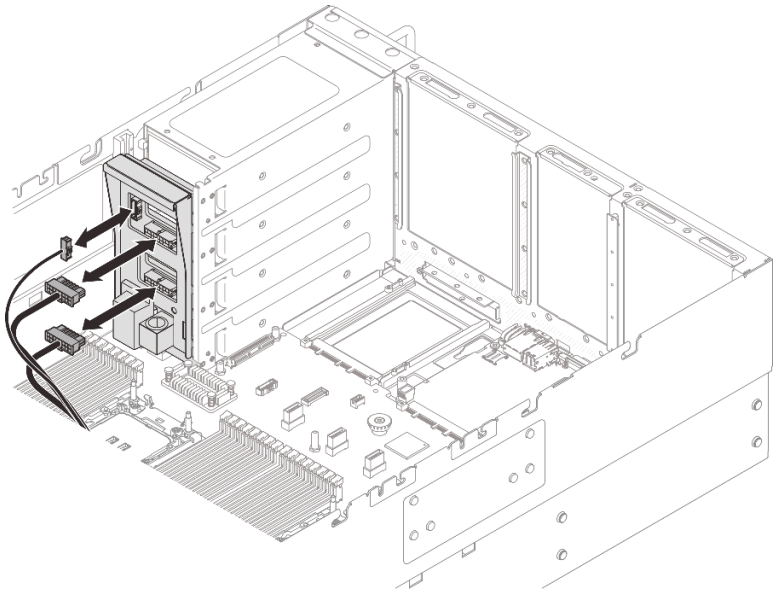

Figure 239. Disconnecting power distribution board cables

Step 6. Grasp and lift the power distribution board to remove it.

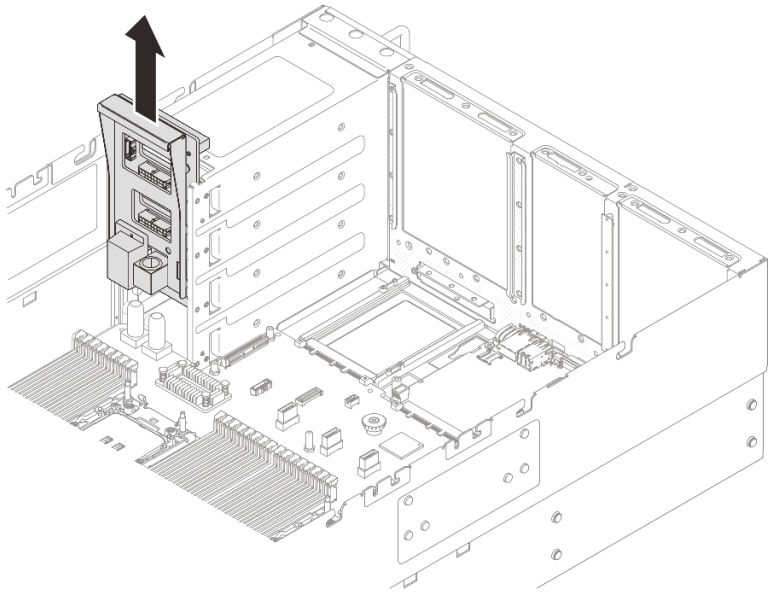

Figure 240. Removing power distribution board

After you finish

1. Install a replacement unit. See “Install the power distribution board” on page 292.
2. If you are instructed to return the component or optional device, follow all packaging instructions, and use any packaging materials for shipping that are supplied to you.
3. If you plan to recycle the component.
   a. Remove the six screws, and separate the backplane from the bracket.

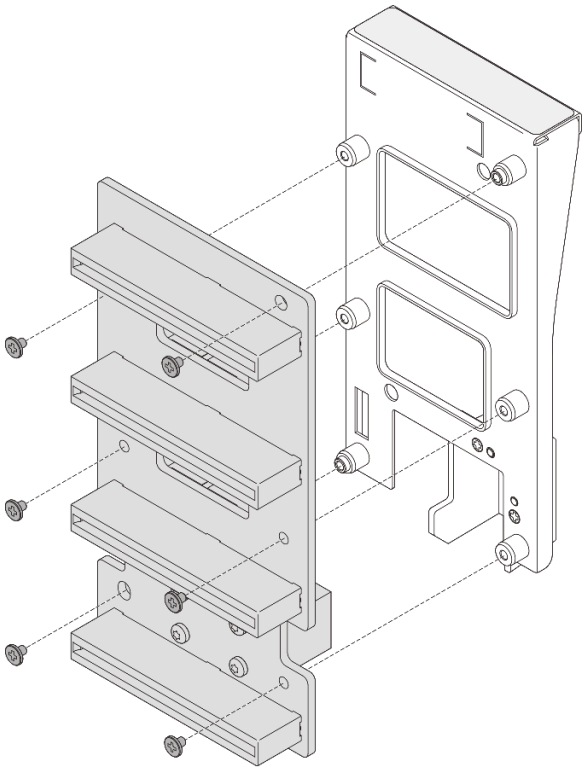

Figure 241. Disassembling the power distribution board

b. Recycle the component in compliance with local regulations.

Demo video

Watch the procedure on YouTube

Install the power distribution board

Follow the instructions in this section to install the power distribution board.

About this task

Attention:

- Read “Installation Guidelines” on page 45 and “Safety inspection checklist” on page 46 to ensure that you work safely.
- Power off the server and peripheral devices and disconnect the power cords and all external cables. See “Power off the server” on page 61.
- Prevent exposure to static electricity, which might lead to system halt and loss of data, by keeping static-sensitive components in their static-protective packages until installation, and handling these devices with an electrostatic-discharge wrist strap or other grounding system.

Firmware and driver download: You might need to update the firmware or driver after replacing a component.

- Go to https://datacentersupport.lenovo.com/products/servers/thinksystem/sr860v4/7djn/downloads/driver-list to see the latest firmware and driver updates for your server.
- Go to “Update the firmware” on page 386 for more information on firmware updating tools.

Procedure

Step 1. Align the bottom connector on the power distribution board to the corresponding connector on the system board assembly; then, push the power distribution board in until it is firmly seated.

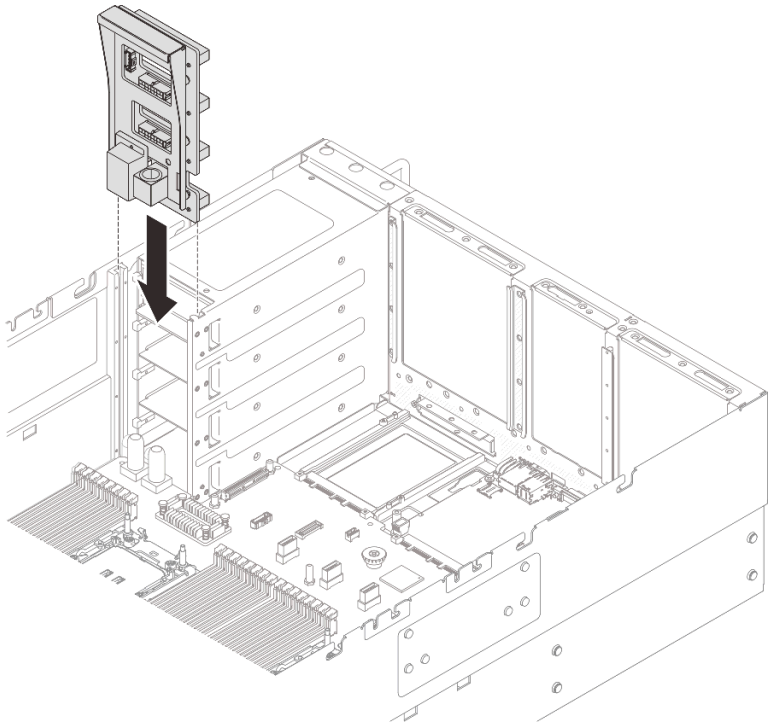

Figure 242. Installing power distribution board

Step 2. Connect the sideband and power cables to the power distribution board. See ***Internal Cable Routing Guide*** for more information on the internal cable routing.

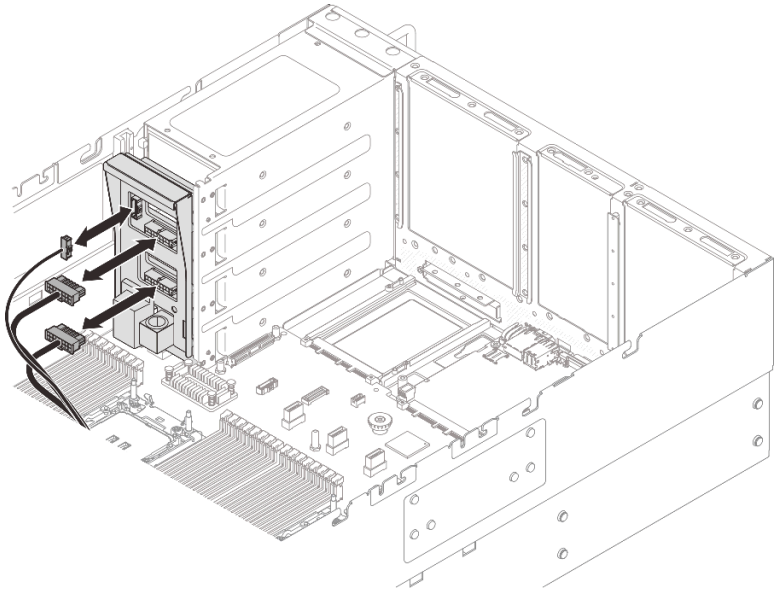

Figure 243. Connecting power distribution board cables

After you finish

1. Reinstall the rear top cover. See “Install the rear top cover” on page 373.
2. Reinstall the front top cover. See “Install the front top cover” on page 375.
3. Reinstall all the power supply units. See “Install a power supply unit” on page 301.
4. Complete the parts replacement. See “Complete the parts replacement” on page 382.

Demo video

Watch the procedure on YouTube

Power supply bracket (CRPS) replacement

Follow the instructions in this section to remove or install a power supply bracket (CRPS).

Remove a power supply bracket (CRPS)

Follow the instructions in this section to remove a power supply bracket (CRPS).

About this task

S002

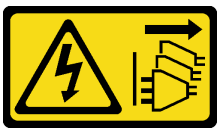

CAUTION:
The power-control button on the device and the power switch on the power supply do not turn off the electrical current supplied to the device. The device also might have more than one power cord. To remove all electrical current from the device, ensure that all power cords are disconnected from the power source.

S029



DANGER

For -48V dc power supply, electrical current from power cords is hazardous.
To avoid a shock hazard:

- **To connect or disconnect -48V dc power cords when you need to remove/install redundancy power supply unit(s).**

To Connect:	To Disconnect:
1. Turn OFF subject dc power source(s) and equipment (s) that are attached to this product. 2. Install the power supply unit(s) into the system housing. 3. Attach dc power cord(s) to the product. • Ensure correct polarity of -48 V dc connections: RTN is + and -Vin (typical -48 V) dc is -. Earth ground should be connected very well. 4. Connect dc power cord(s) to subject power source (s). 5. Turn ON all the power source(s).	1. Disconnect or turn off the subject dc power source(s) (at the breaker panel) before removing the power supply unit(s). 2. Remove the subject dc cord(s) and make sure the wire terminal of power cord(s) is insulated. 3. Unplug the subject power supply unit(s) from the system housing.

S035

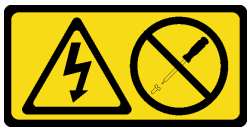

CAUTION:
Never remove the cover on a power supply or any part that has this label attached. Hazardous voltage, current, and energy levels are present inside any component that has this label attached. There are no serviceable parts inside these components. If you suspect a problem with one of these parts, contact a service technician.

Attention:

- Read “Installation Guidelines” on page 45 and “Safety inspection checklist” on page 46 to ensure that you work safely.
- Power off the server and peripheral devices and disconnect the power cords and all external cables. See “Power off the server” on page 61.
- Prevent exposure to static electricity, which might lead to system halt and loss of data, by keeping static-sensitive components in their static-protective packages until installation, and handling these devices with an electrostatic-discharge wrist strap or other grounding system.

Note: A power supply bracket is only available on models configured with CRPS power supplies.

Procedure

Step 1. If the server is installed in a rack, slide the server out on its rack slide rails to gain access to the top covers, or remove the server from the rack. See “Server replacement” on page 67.

Step 2. Remove the front top cover. See “Remove the front top cover” on page 369.

Step 3. Remove the rear top cover. See “Remove the rear top cover” on page 371.

Step 4. Remove the power supply units. See “Remove a power supply unit” on page 298.

Step 5. Remove the power distribution board. See “Remove the power distribution board” on page 288.

Step 6. If necessary, remove PCIe riser 3. See “Remove the PCIe riser” on page 249.

Step 7. Remove the power supply bracket screw

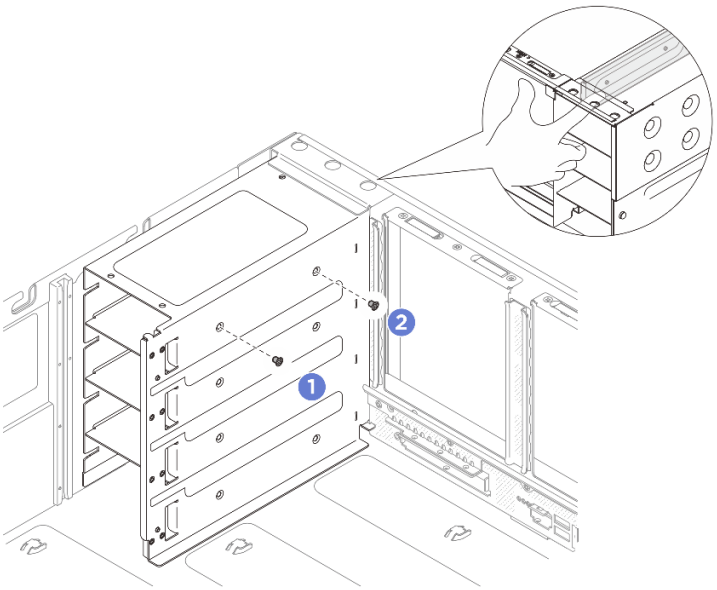

Figure 244. Removing power supply bracket screw

Note: Hold the power supply bracket in place while installing or removing the screws.

a. 1 Remove the inner screw.

b. 2 Remove the outer screw.

Step 8. Remove the power supply bracket out of the PSU bay.

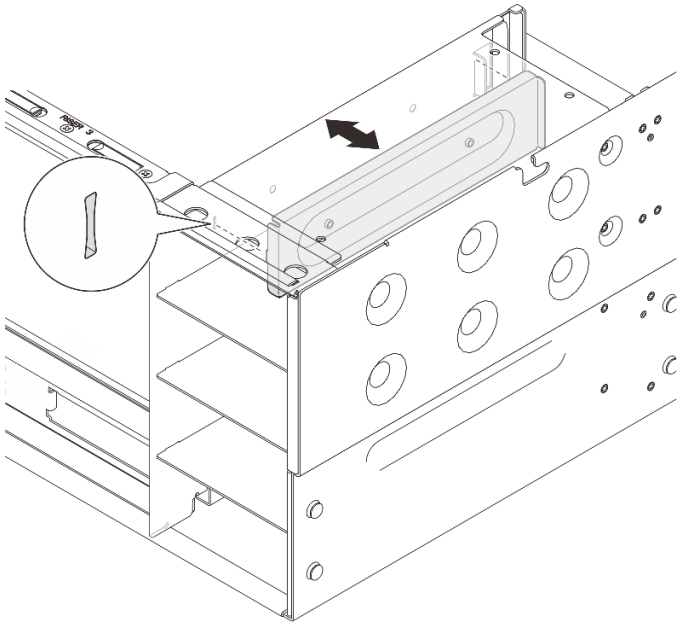

Figure 245. Removing power supply bracket

After you finish

1. Install a replacement unit. See “Install a power supply bracket (CRPS)” on page 297.

2. If you are instructed to return the component or optional device, follow all packaging instructions, and use any packaging materials for shipping that are supplied to you.

Demo video

Watch the procedure on YouTube

Install a power supply bracket (CRPS)

Follow the instructions in this section to install a power supply bracket (CRPS).

About this task

Attention:

- Read “Installation Guidelines” on page 45 and “Safety inspection checklist” on page 46 to ensure that you work safely.
- Power off the server and peripheral devices and disconnect the power cords and all external cables. See “Power off the server” on page 61.
- Prevent exposure to static electricity, which might lead to system halt and loss of data, by keeping static-sensitive components in their static-protective packages until installation, and handling these devices with an electrostatic-discharge wrist strap or other grounding system.

Note: A power supply bracket is only available on models configured with CRPS power supplies.

Procedure

Step 1. Align and install the power supply bracket into the power supply bay.

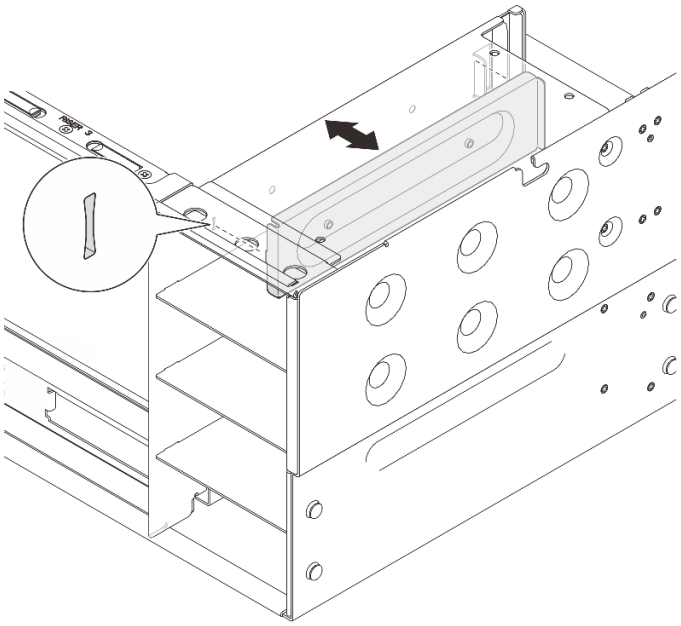

Figure 246. Installing power supply bracket

Step 2. Secure the power supply bracket.

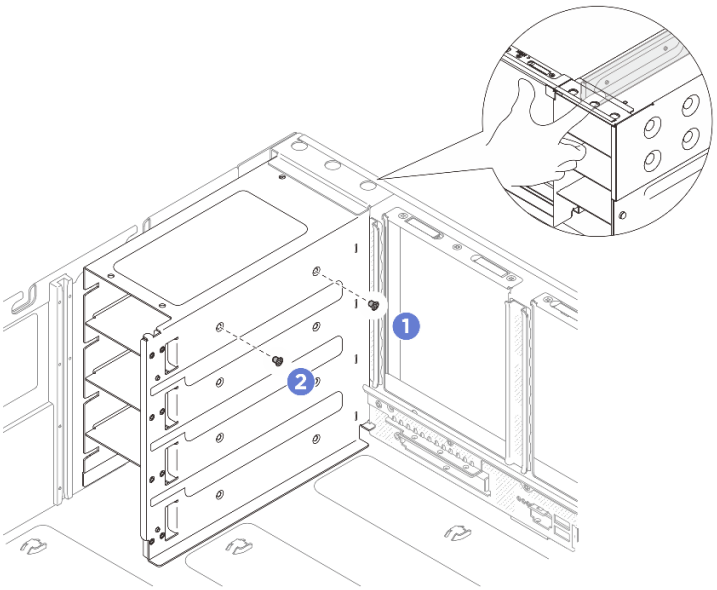

Figure 247. Securing power supply bracket

Note: Hold the power supply bracket in place while installing or removing the screws.

a. 1 Install the outer screw.

b. 2 Install the inner screw.

After you finish

1. Reinstall the PCIe riser if you have removed it. See “Install the PCIe riser” on page 261.
2. Reinstall the power distribution board. See “Install the power distribution board” on page 292.
3. Reinstall the rear top cover. See “Install the rear top cover” on page 373.
4. Reinstall the front top cover. See “Install the front top cover” on page 375.
5. Reinstall the power supply units. See “Install a power supply unit” on page 301.
6. Complete the parts replacement. See “Complete the parts replacement” on page 382.

Demo video

Watch the procedure on YouTube

Power supply unit replacement

Follow the instructions in this section to install or remove power supply units.

Remove a power supply unit

Follow the instructions in this section to remove a power supply unit.

About this task

CAUTION:



High touch current. Connect to earth before connecting to supply.

S002



CAUTION:
The power-control button on the device and the power switch on the power supply do not turn off the electrical current supplied to the device. The device also might have more than one power cord. To remove all electrical current from the device, ensure that all power cords are disconnected from the power source.

S029



DANGER

For -48V dc power supply, electrical current from power cords is hazardous.
To avoid a shock hazard:

- **To connect or disconnect -48V dc power cords when you need to remove/install redundancy power supply unit(s).**

To Connect:

1. Turn OFF subject dc power source(s) and equipment (s) that are attached to this product.
2. Install the power supply unit(s) into the system housing.
3. Attach dc power cord(s) to the product.
   - Ensure correct polarity of -48 V dc connections: RTN is + and -Vin (typical -48 V) dc is -. Earth ground should be connected very well.
4. Connect dc power cord(s) to subject power source (s).
5. Turn ON all the power source(s).

To Disconnect:

1. Disconnect or turn off the subject dc power source(s) (at the breaker panel) before removing the power supply unit(s).
2. Remove the subject dc cord(s) and make sure the wire terminal of power cord(s) is insulated.
3. Unplug the subject power supply unit(s) from the system housing.

S035

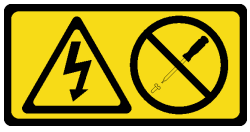

CAUTION:

Never remove the cover on a power supply or any part that has this label attached. Hazardous voltage, current, and energy levels are present inside any component that has this label attached. There are no serviceable parts inside these components. If you suspect a problem with one of these parts, contact a service technician.



在直流输入状态下，若电源供应器插座不支持热插拔功能，请务必不要对设备电源线进行热插拔，此操作可能导致设备损坏及数据丢失。因错误执行热插拔导致的设备故障或损坏，不属于保修范围。

NEVER CONNECT AND DISCONNECT THE POWER SUPPLY CABLE AND EQUIPMENT WHILE YOUR EQUIPMENT IS POWERED ON WITH DC SUPPLY (hot-plugging). Otherwise you may damage the equipment and result in data loss, the damages and losses result from incorrect operation of the equipment will not be covered by the manufacturers' warranty.

CAUTION:
240 V dc input (input range: 180-300 V dc) is supported in Chinese Mainland ONLY. Power supply with 240 V dc input cannot support hot plugging power cord function. Before removing the power supply with dc input, please turn off server or disconnect dc power sources at the breaker panel or by turning off the power source. Then, remove the power cord.

Attention: Read "Installation Guidelines" on page 45 and "Safety inspection checklist" on page 46 to ensure that you work safely.

Procedure

Step 1. Disconnect both ends of the power cord and keep it in an ESD-safe place.

- For AC power supply units, disconnect both ends of the power cord and keep it in an ESD-safe place.
- For 240 V DC power supply units, turn off the server, and then, disconnect both ends of the power cord and keep it in an ESD-safe place.
- For –48V DC power supply units:
  1. Turn off the server and disconnect the power cords from the electrical outlet.
  2. Use a slotted screwdriver to loosen the captive screws on the power supply terminal block.
  3. Disconnect the power cords from the power supply unit, make the wire terminal insulated, and keep them in an ESD-safe place.

Note: If you are replacing more than one power supply units, replace them one by one to ensure that the power supply to the server is not interrupted. Do not disconnect the power cord from the secondly replaced power supply unit until the LED(s) on the firstly replaced power supply unit are lit green. For the location of the power-supply-unit LEDs, refer to "Power supply LEDs" on page 411.

Step 2. Remove the power supply unit.

Note: PSU with a release tab is a hot-swap PSU. The color of the release tab does not affect the serviceability of the PSU.

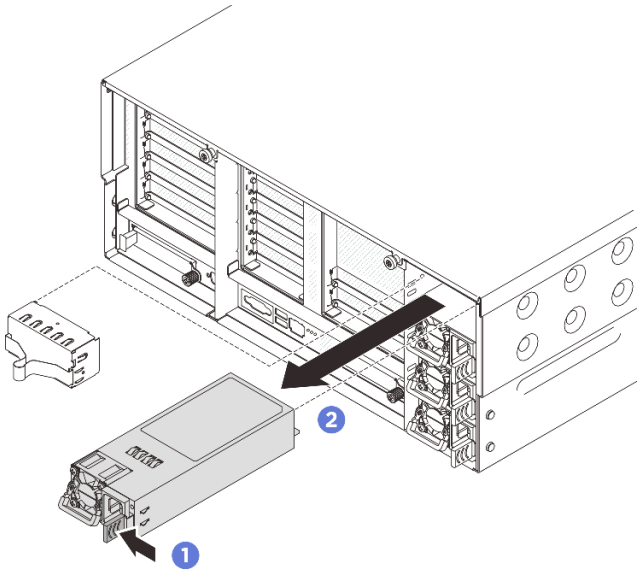

Figure 248. Removing the power supply unit

a. 1 Press and hold on the orange release tab.

b. 2 Grasp the handle and slide the power supply unit out from the server.

After you finish

1. Install a replacement unit or filler. See "Install a power supply unit" on page 301.
2. If you are instructed to return the component or optional device, follow all packaging instructions, and use any packaging materials for shipping that are supplied to you.

Demo video

Watch the procedure on YouTube

Install a power supply unit

Follow the instructions in this section to install a power supply unit.

About this task

The following describes the information that you must consider when installing a power supply unit:

- If the power supply unit to be removed is the only one installed, the power supply unit is not hot-swappable. Before removing it, you must turn off the server first. To support redundancy mode or hot-swap, install an additional hot-swap power supply unit.
- If you are replacing the existing power supply with a new power supply:
  - Use Lenovo Capacity Planner to calculate the required power capacity for what is configured for your server. More information about Lenovo Capacity Planner is available at: https://datacentersupport.lenovo.com/solutions/lnvo-lcp.
  - Ensure that the devices that you are installing are supported. For a list of supported optional devices for the server, go to: https://serverproven.lenovo.com.

– Attach the power information label that comes with this option on the existing label near the power supply.

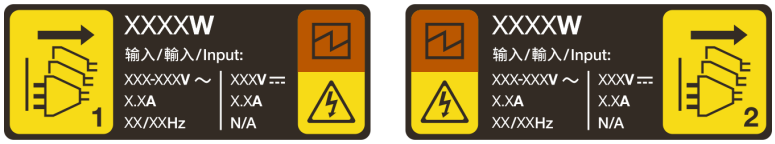

Figure 249. Example power supply unit label on the top cover

CAUTION:



High touch current. Connect to earth before connecting to supply.

S002

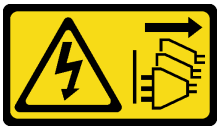

CAUTION:
The power-control button on the device and the power switch on the power supply do not turn off the electrical current supplied to the device. The device also might have more than one power cord. To remove all electrical current from the device, ensure that all power cords are disconnected from the power source.

S029



DANGER

For -48V dc power supply, electrical current from power cords is hazardous.
To avoid a shock hazard:

- **To connect or disconnect -48V dc power cords when you need to remove/install redundancy power supply unit(s).**

To Connect:	To Disconnect:
1. Turn OFF subject dc power source(s) and equipment (s) that are attached to this product. 2. Install the power supply unit(s) into the system housing. 3. Attach dc power cord(s) to the product. • Ensure correct polarity of -48 V dc connections: RTN is + and -Vin (typical -48 V) dc is -. Earth ground should be connected very well. 4. Connect dc power cord(s) to subject power source (s). 5. Turn ON all the power source(s).	1. Disconnect or turn off the subject dc power source(s) (at the breaker panel) before removing the power supply unit(s). 2. Remove the subject dc cord(s) and make sure the wire terminal of power cord(s) is insulated. 3. Unplug the subject power supply unit(s) from the system housing.

S035

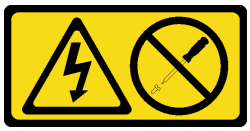

CAUTION:
Never remove the cover on a power supply or any part that has this label attached. Hazardous voltage, current, and energy levels are present inside any component that has this label attached. There are no serviceable parts inside these components. If you suspect a problem with one of these parts, contact a service technician.



在直流输入状态下，若电源供应器插座不支持热插拔功能，请务必不要对设备电源线进行热插拔，此操作可能导致设备损坏及数据丢失。因错误执行热插拔导致的设备故障或损坏，不属于保修范围。

NEVER CONNECT AND DISCONNECT THE POWER SUPPLY CABLE AND EQUIPMENT WHILE YOUR EQUIPMENT IS POWERED ON WITH DC SUPPLY (hot-plugging). Otherwise you may damage the equipment and result in data loss, the damages and losses result from incorrect operation of the equipment will not be covered by the manufacturers' warranty.

CAUTION:
240 V dc input (input range: 180-300 V dc) is supported in Chinese Mainland ONLY. Power supply with 240 V dc input cannot support hot plugging power cord function. Before removing the power supply with dc input, please turn off server or disconnect dc power sources at the breaker panel or by turning off the power source. Then, remove the power cord.

Attention: Read "Installation Guidelines" on page 45 and "Safety inspection checklist" on page 46 to ensure that you work safely.

Procedure

Step 1. Make preparation for the task.

a. If installing a power supply into an empty bay, remove the power supply filler panel from the power supply bay.

b. Make sure that the power supply unit to be installed is the same as the installed ones. Otherwise, remove all existing power supply units and replace them all with the same power supply units.

   Note: Make sure all the power supply units to be installed are of the same wattage. Do not mix power supply units of different wattages in the same unit of server.

c. If more than one units are to be installed, start with the lowest available power supply bay.

Step 2. Grasp the handle and slide it into the power supply bay until it clicks into place.

Note: PSU with a release tab is a hot-swap PSU. The color of the release tab does not affect the serviceability of the PSU.

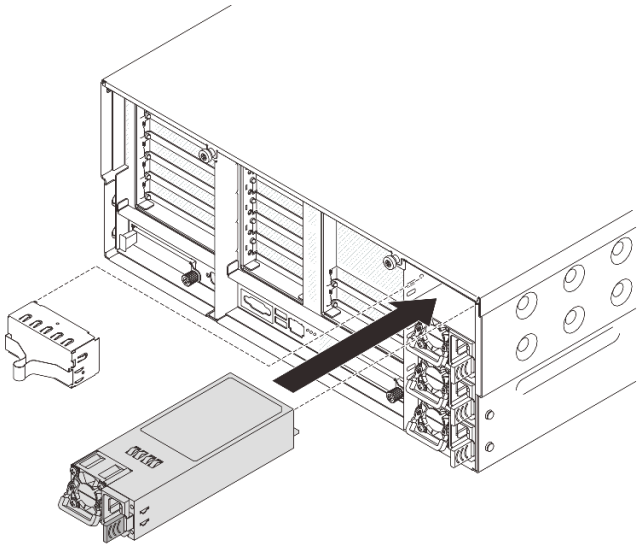

Figure 250. Installing power supply unit

Step 3. Connect the power supply unit to a properly grounded electrical outlet.

- For AC power supply units:
  1. Connect one end of the power cord to the power connector on the power supply unit.
  2. Connect the other end of the power cord to a properly grounded electrical outlet.
- For 240 V DC power supply units:
  1. Turn off the server.
  2. Connect one end of the power cord to the power connector on the power supply unit.
  3. Connect the other end of the power cord to a properly grounded electrical outlet.
- For –48V DC power supply units:
  1. Use a slotted screwdriver to loosen three captive screws on the power supply terminal block.
  2. Check the type label on the power supply block and each power cord.

Type	PSU terminal block	Power cord
Input	-Vin	-Vin

Ground	⏚	GND
Input	RTN	RTN

3. Face the groove side of each power cord pin upwards, and then plug the pins into corresponding holes on the power block. Use the table above for guidance to ensure that the pins find correct slots.
4. Tighten the captive screws on the power block. Ensure that the screws and cord pins are secured in place and no bare metal parts are shown.
5. Connect the other end of the cables to a properly grounded electrical outlet. Ensure that the cable ends find correct outlets.

Step 4. Make sure the power supply unit handle is perpendicular to the power supply unit; then, tie the power cord to the handle with the pre-attached strap as shown below.

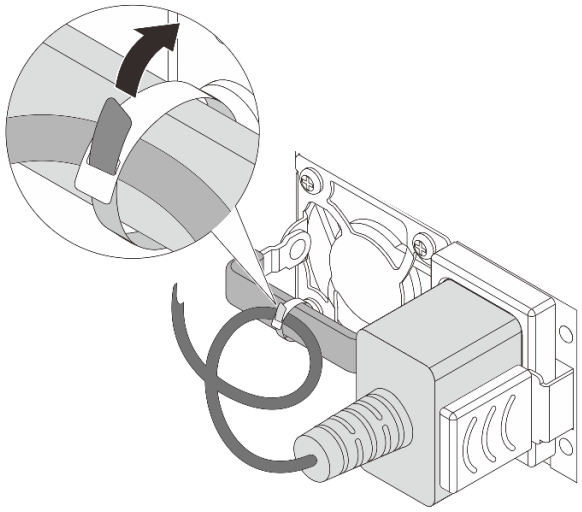

Figure 251. Routing and tying power cord

After you finish

If the server is turned off, turn on the server. Ensure that both the power input LED and the power output LED on the power supply are lit, indicating that the power supply is operating properly.

- Both LEDs on the CRPS Premium power supply unit are lit green, indicating that the power supply unit is operating properly.
- The LED on the CRPS power supply unit is lit green, indicating that the power supply unit is operating properly.

Demo video

Watch the procedure on YouTube

Processor and heat sink replacement (trained technician only)

Follow the instruction in this section to replace an assembled processor and heat sink, known as a processor-heat-sink module (PHM), a processor, or a heat sink.

Note: If you are replacing a processor with cold plate, see “Lenovo Processor Neptune Core Module replacement (trained technicians only)” on page 181.

Important: This task must be operated by trained technicians that are certified by Lenovo Service. Do not attempt to remove or install the part without proper training and qualification.

Attention: Before reusing a processor or heat sink, make sure you use Lenovo proven alcohol cleaning pad and thermal grease.

Remove a processor and heat sink

This task has instructions for removing an assembled processor and heat sink, known as a processor-heat-sink module (PHM). This task requires a Torx T30 driver. This procedure must be executed by a trained technician.

About this task

S002

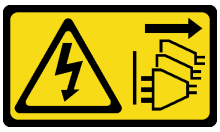

CAUTION:
The power-control button on the device and the power switch on the power supply do not turn off the electrical current supplied to the device. The device also might have more than one power cord. To remove all electrical current from the device, ensure that all power cords are disconnected from the power source.

Attention:

- Read “Installation Guidelines” on page 45 and “Safety inspection checklist” on page 46 to ensure that you work safely.
- Power off the server and peripheral devices and disconnect the power cords and all external cables. See “Power off the server” on page 61.
- Prevent exposure to static electricity, which might lead to system halt and loss of data, by keeping static-sensitive components in their static-protective packages until installation, and handling these devices with an electrostatic-discharge wrist strap or other grounding system.
- Each processor socket must always contain a cover or a PHM. When removing or installing a PHM, protect empty processor sockets with a cover.
- Do not touch the processor socket or processor contacts. Processor-socket contacts are very fragile and easily damaged. Contaminants on the processor contacts, such as oil from your skin, can cause connection failures.
- Do not allow the thermal grease on the processor or heat sink to come in contact with anything. Contact with any surface can compromise the thermal grease, rendering it ineffective. Thermal grease can damage components, such as the electrical connectors in the processor socket.
- Remove and install only one PHM at a time. If the system supports multiple processors, install the PHMs starting with the first processor socket.

Note: The heat sink, processor, and processor carrier for your system might be different from those shown in the illustrations.

The following illustration shows the components of the PHM.

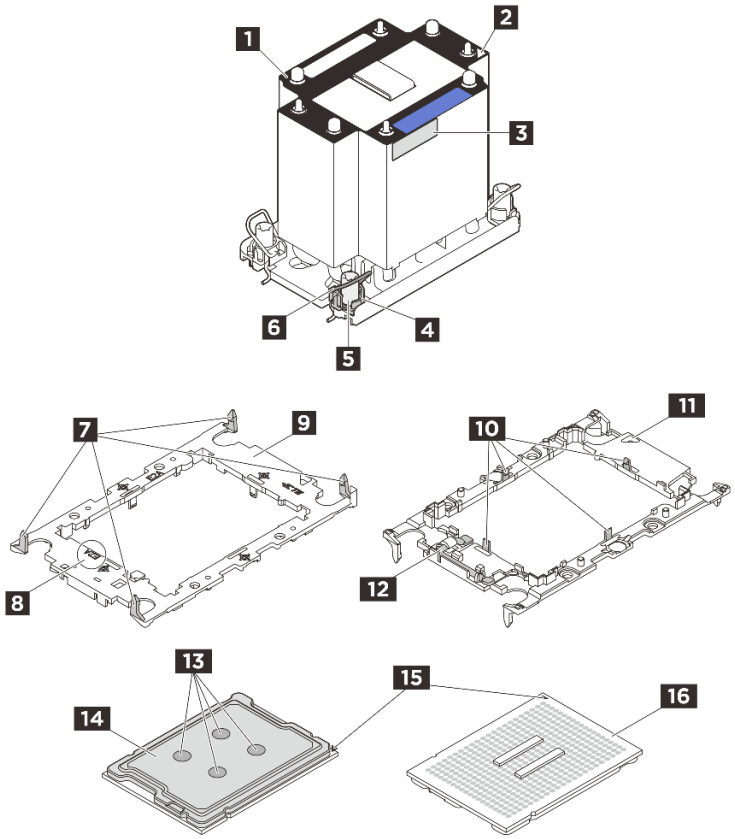

Figure 252. PHM components

1 Heat sink	9 Processor carrier
2 Heat sink triangular mark	10 Clips to secure processor in carrier
3 Processor identification label	11 Carrier triangular mark
4 Nut and wire bail retainer	12 Processor ejector handle
5 Torx T30 nut	13 Thermal grease
6 Anti-tilt wire bail	14 Processor heat spreader
7 Clips to secure carrier to heat sink	15 Processor triangular mark
8 Processor carrier code marking	16 Processor contacts

Procedure

Step 1. Make preparation for this task.

a. To replace a front PHM (processor 3 or processor 4), remove the following:

1. Remove the front top cover. See “Remove the front top cover” on page 369
2. Remove the front air baffle. See “Remove the front air baffle” on page 107.

b. To replace a rear PHM (processor 1 or processor 2), remove the following:

1. Remove the front top cover. See “Remove the front top cover” on page 369
2. Remove the rear top cover. See “Remove the rear top cover” on page 371.

3. Remove the crossbar. See “Remove the crossbar” on page 125.
4. Remove the PCIe risers. See “Remove the PCIe riser” on page 249.
5. Remove the rear air baffle. See “Remove the rear air baffle” on page 112.

Step 2. Remove the PHM from the system board assembly.

Notes:

- Do not touch the contacts on the bottom of the processor.
- Keep the processor socket clean from any object to prevent possible damages.

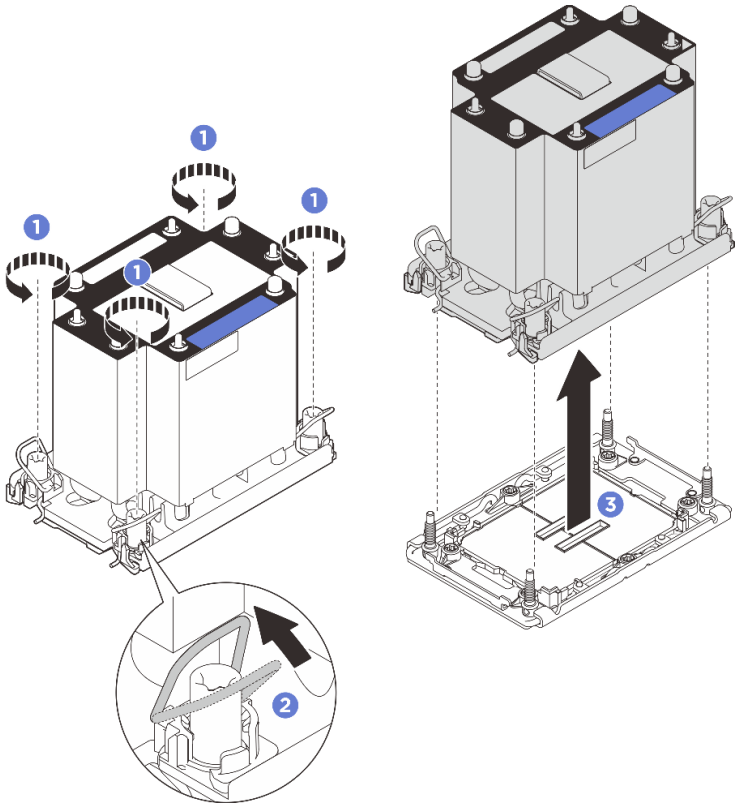

Figure 253. 3U Standard PHM removal

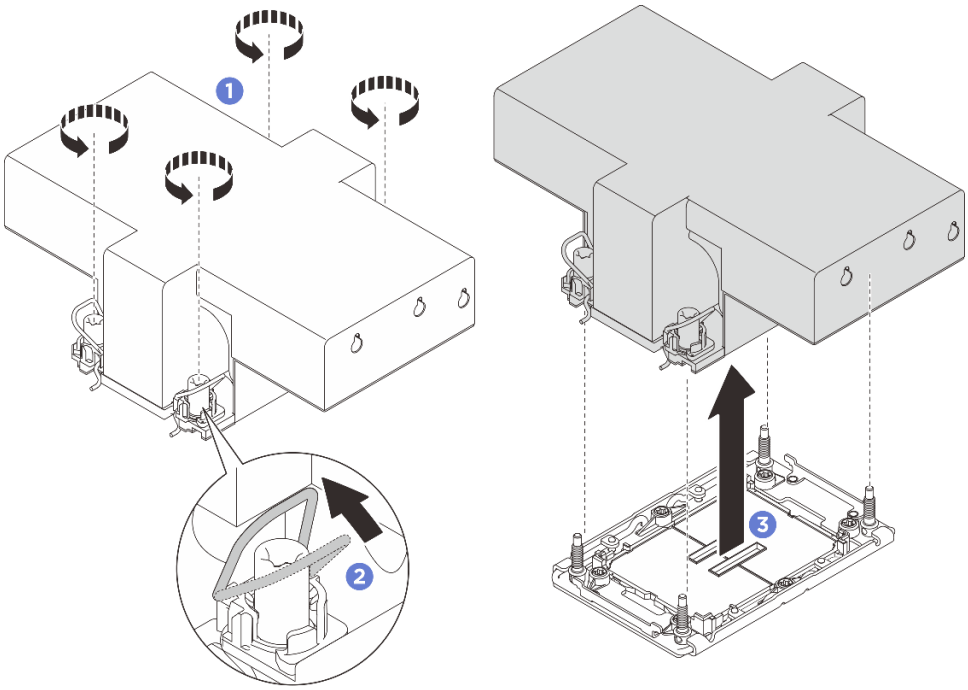

Figure 254. 2U performance PHM removal

a. 1 Fully loosen the Torx T30 nuts on the PHM ***in the removal sequence shown*** on the heat-sink label.

b. 2 Rotate the anti-tilt wire bails inward.

c. 3 Carefully lift the PHM from the processor socket. If the PHM cannot be fully lifted out of the socket, further loosen the Torx T30 nuts and try lifting the PHM again.

After you finish

1. Each processor socket must always contain a cover or a PHM. Protect empty processor sockets with a cover or install a new PHM.
2. If you are removing the PHM as part of a system board assembly replacement, set the PHM aside.
3. If you are reusing the processor or heat sink, separate the processor from its retainer. See "Separate the processor from carrier and heat sink" on page 309.
4. If you are instructed to return the component or optional device, follow all packaging instructions, and use any packaging materials for shipping that are supplied to you.

Demo video

Watch the procedure on YouTube

Separate the processor from carrier and heat sink

This task has instructions for separating a processor and its carrier from an assembled processor and heat sink, known as a processor-heat-sink module (PHM). This procedure must be executed by a trained technician.

About this task

Attention:

- Read “Installation Guidelines” on page 45 and “Safety inspection checklist” on page 46 to ensure that you work safely.
- Power off the server and peripheral devices and disconnect the power cords and all external cables. See “Power off the server” on page 61.
- Prevent exposure to static electricity, which might lead to system halt and loss of data, by keeping static-sensitive components in their static-protective packages until installation, and handling these devices with an electrostatic-discharge wrist strap or other grounding system.
- Do not touch the processor contacts. Contaminants on the processor contacts, such as oil from your skin, can cause connection failures.
- Do not allow the thermal grease on the processor or heat sink to come in contact with anything. Contact with any surface can compromise the thermal grease, rendering it ineffective. Thermal grease can damage components, such as the electrical connectors in the processor socket.

Note: The heat sink, processor, and processor carrier for your system might be different from those shown in the illustrations.

Procedure

Step 1. Separate the processor from the heat sink and carrier.

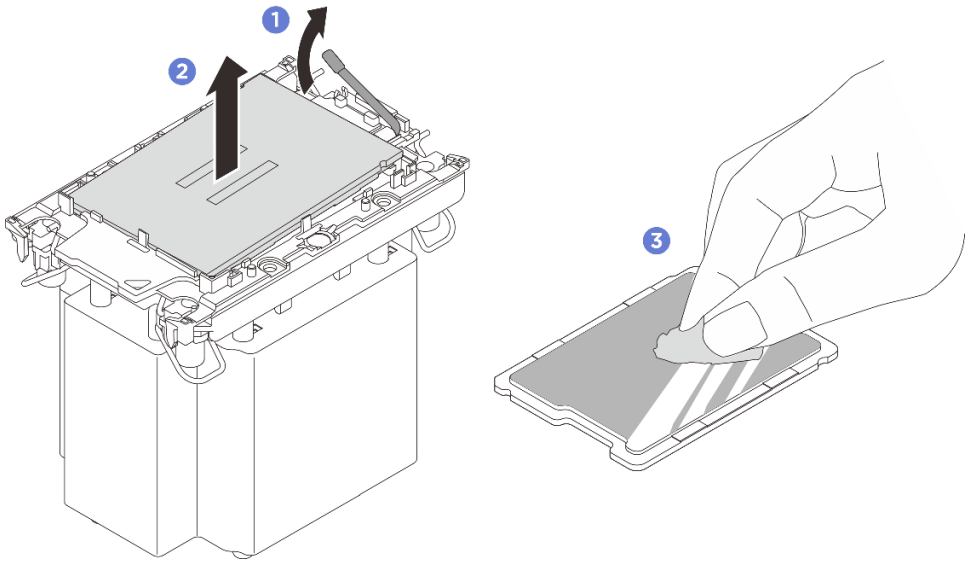

Figure 255. Separating a processor from the heat sink and carrier

Note: Do not touch the contacts on the processor.

a. 1 Lift the handle to release the processor from the carrier.

b. 2 Hold the processor by its edges; then, lift the processor from the heat sink and carrier.

c. 3 Without putting the processor down, wipe the thermal grease from the top of the processor with an alcohol cleaning pad; then, place the processor on a static protective surface with the processor-contact side up.

Step 2. Separate the processor carrier from the heat sink.

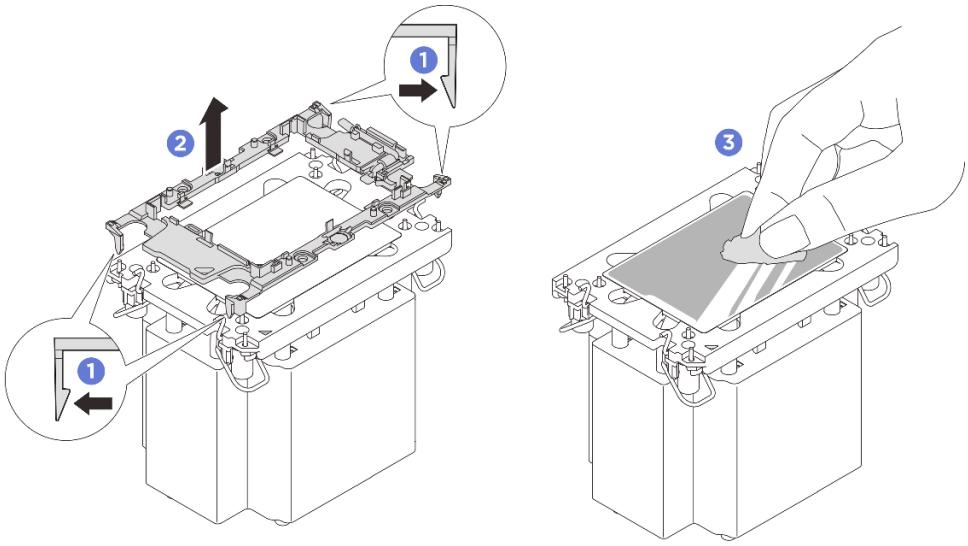

Figure 256. Separating a processor carrier the from heat sink

Note: The processor carrier will be discarded and replaced with a new one.

a. 1 Release the retaining clips from the heat sink.

b. 2 Lift the carrier from the heat sink.

c. 3 Wipe the thermal grease from the bottom of the heat sink with an alcohol cleaning pad.

After you finish

1. Install the PHM. See "Install a processor and heat sink" on page 311.
2. If you are instructed to return the component or optional device, follow all packaging instructions, and use any packaging materials for shipping that are supplied to you.

Demo video

Watch the procedure on YouTube

Install a processor and heat sink

This task has instructions for installing an assembled processor and heat sink, known as a processor-heat-sink module (PHM). This task requires a Torx T30 driver. This procedure must be executed by a trained technician.

About this task

Attention:

- Read "Installation Guidelines" on page 45 and "Safety inspection checklist" on page 46 to ensure that you work safely.
- Power off the server and peripheral devices and disconnect the power cords and all external cables. See "Power off the server" on page 61.
- Prevent exposure to static electricity, which might lead to system halt and loss of data, by keeping static-sensitive components in their static-protective packages until installation, and handling these devices with an electrostatic-discharge wrist strap or other grounding system.
- Each processor socket must always contain a cover or a PHM. When removing or installing a PHM, protect empty processor sockets with a cover.

- Do not touch the processor socket or processor contacts. Processor-socket contacts are very fragile and easily damaged. Contaminants on the processor contacts, such as oil from your skin, can cause connection failures.
- Do not allow the thermal grease on the processor or heat sink to come in contact with anything. Contact with any surface can compromise the thermal grease, rendering it ineffective. Thermal grease can damage components, such as the electrical connectors in the processor socket.
- Remove and install only one PHM at a time. If the system supports multiple processors, install the PHMs starting with the first processor socket.

Notes:

- The heat sink, processor, and processor carrier for your system might be different from those shown in the illustrations.
- PHMs are keyed for the socket where they can be installed and for their orientation in the socket.
- See https://serverproven.lenovo.com for a list of processors supported for your server. All processors must have the same speed, number of cores, and frequency.
- Before you install a new PHM or replacement processor, update your system firmware to the latest level. See “Update the firmware” on page 386.

The following illustration shows the components of the PHM.

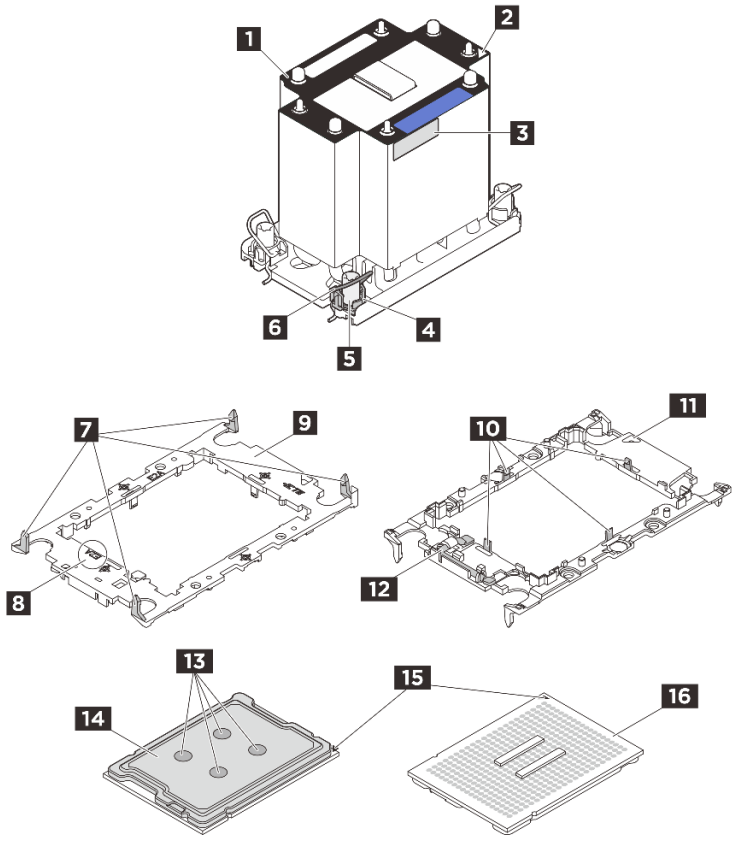

Figure 257. PHM components

1 Heat sink	9 Processor carrier
2 Heat sink triangular mark	10 Clips to secure processor in carrier
3 Processor identification label	11 Carrier triangular mark
4 Nut and wire bail retainer	12 Processor ejector handle
5 Torx T30 nut	13 Thermal grease
6 Anti-tilt wire bail	14 Processor heat spreader
7 Clips to secure carrier to heat sink	15 Processor triangular mark
8 Processor carrier code marking	16 Processor contacts

Firmware and driver download: You might need to update the firmware or driver after replacing a component.

- Go to https://datacentersupport.lenovo.com/products/servers/thinksystem/sr860v4/7djn/downloads/driver-list to see the latest firmware and driver updates for your server.
- Go to "Update the firmware" on page 386 for more information on firmware updating tools.

Procedure

Step 1. Record the processor identification label.

- If you are replacing a processor and reusing the heat sink, remove the processor identification label from the heat sink and replace it with the new label that comes with the replacement processor.
- If you are replacing a heat sink and reusing the processor, remove the processor identification label from the old heat sink and place it on the new heat sink in the same location.

  Note: If you are unable to remove the label and place it on the new heat sink, or if the label is damaged during transfer, write the processor serial number from the processor identification label on the new heat sink in the same location as the label would be placed using a permanent marker.

Step 2. Install the processor in the new carrier.

Notes:

- If you are replacing the processor and reusing the heat sink, use the new carrier that comes with the new processor.
- If you are replacing the heat sink and reusing the processor, and if the new heat sink comes with two processor carriers, make sure to use the same type of carrier as the one you discarded.

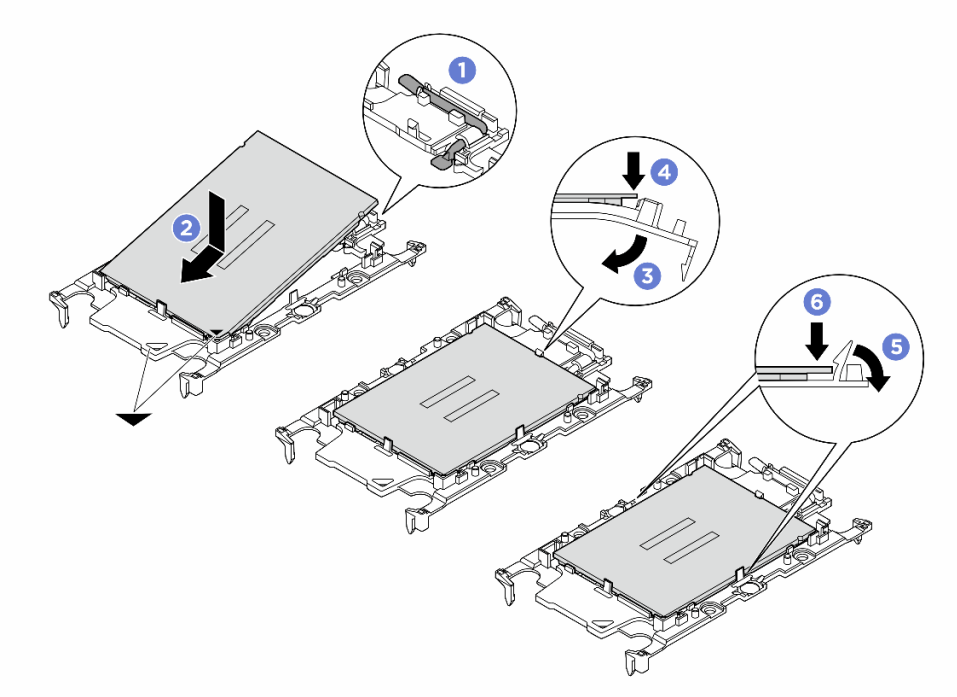

Figure 258. Processor carrier installation

1. 1 Make sure the handle on the carrier is in the closed position.
2. 2 Align the processor on the new carrier so that the triangular marks align; then, insert the marked end of the processor into the carrier.
3. 3 Hold the inserted end of the processor in place; then, pivot the unmarked end of the carrier down and away from the processor.
4. 4 Press the processor and secure the unmarked end under the clip on the carrier.
5. 5 Carefully pivot the sides of the carrier down and away from the processor.
6. 6 Press the processor and secure the sides under the clips on the carrier.

   Note: To prevent the processor from falling out of the carrier, keep the processor-contact side up and hold the processor-carrier assembly by the sides of the carrier.

Step 3. Apply thermal grease.

- If you are replacing the heat sink and reusing the processor, a new heat sink comes with thermal grease and you do not need to apply new thermal grease.

  Note: To ensure the best performance, check the manufacturing date on the new heat sink and make sure it does not exceed two years. Otherwise, wipe off the existing thermal grease and apply new thermal grease.
- If you are replacing the processor and reusing the heat sink, do the following steps to apply thermal grease:
  1. If there is any old thermal grease on the heat sink, wipe off the thermal grease with an alcohol cleaning pad.
  2. Carefully place the processor and carrier in the shipping tray with the processor-contact side down. Make sure the triangular mark on the carrier is oriented in the shipping tray as shown below.

3. Apply the thermal grease on the top of the processor with syringe by forming four uniformly spaced dots, while each dot consists of about 0.1 ml of thermal grease.

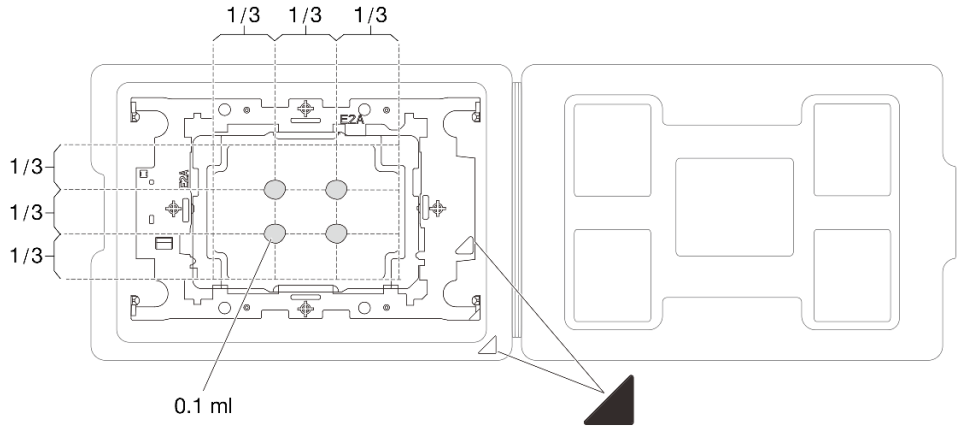

Figure 259. Thermal grease application with processor in shipping tray

Step 4. Assemble the processor and heat sink.

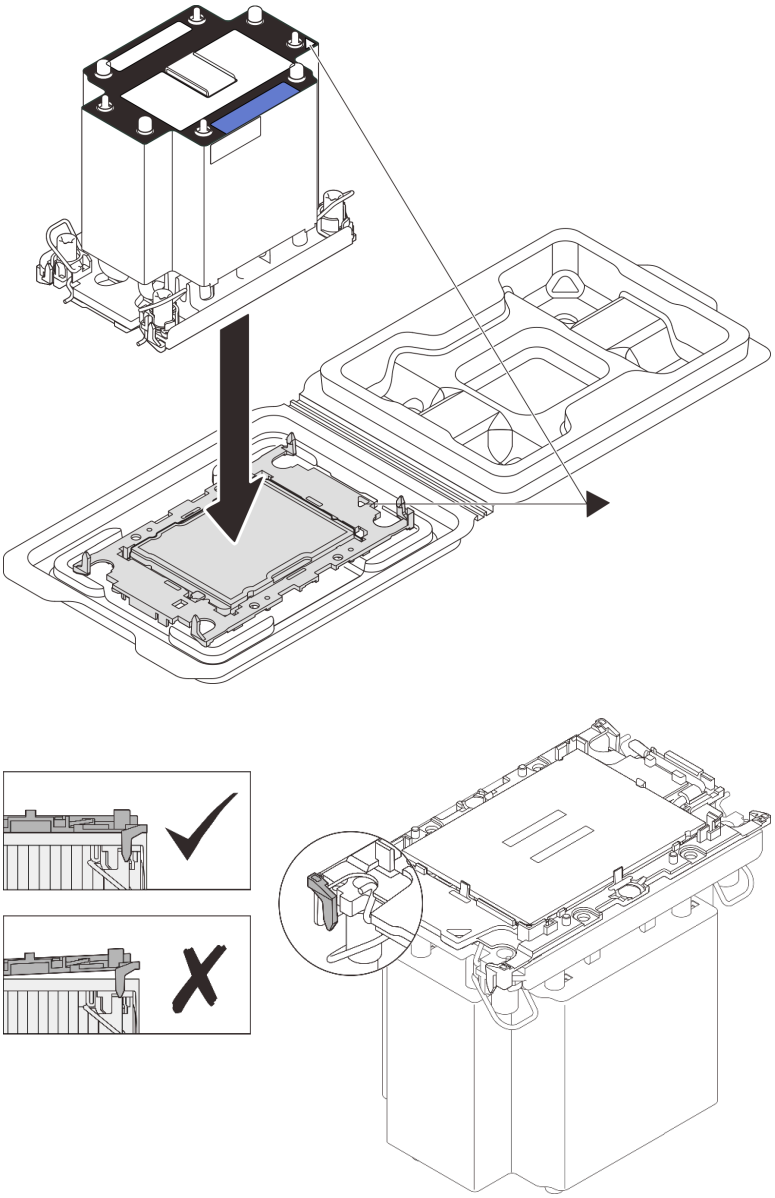

Figure 260. Assembling the PHM with processor in shipping tray

a. Align the triangular mark on the heat sink label with the triangular mark on the processor carrier and processor.

b. Install the heat sink onto the processor-carrier.

c. Press the carrier into place until the clips at all four corners engage. Visually inspect to make sure that there is no gap between the processor carrier and the heat sink.

Step 5. Install the processor-heat-sink module into the processor socket.

Notes:

- Do not touch the contacts on the bottom of the processor.
- Keep the processor socket clean from any object to prevent possible damages.

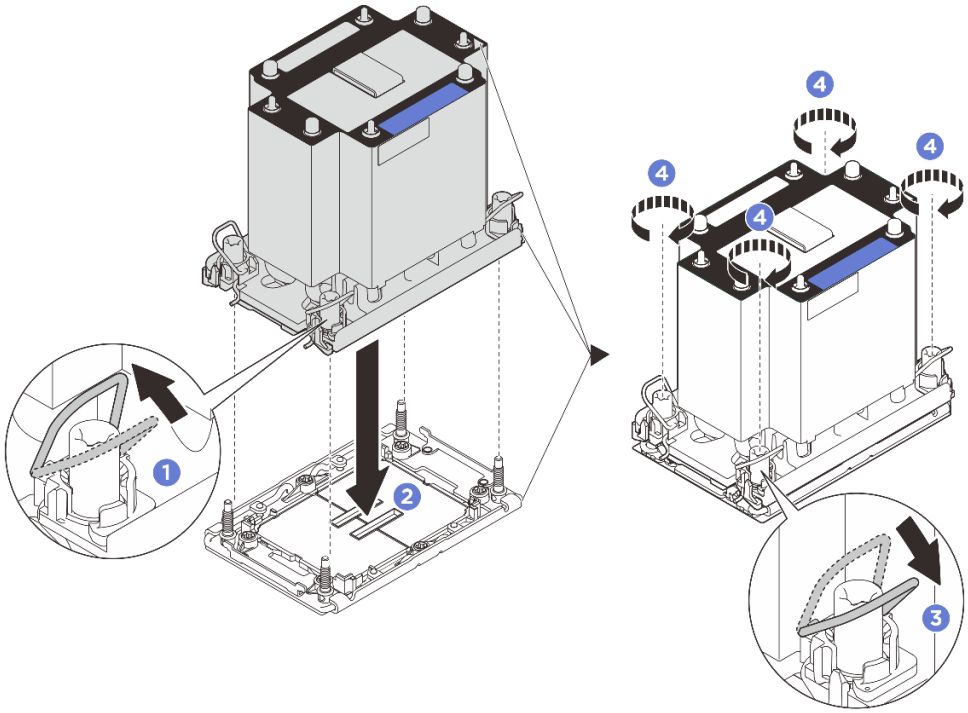

Figure 261. 2U Standard PHM installation

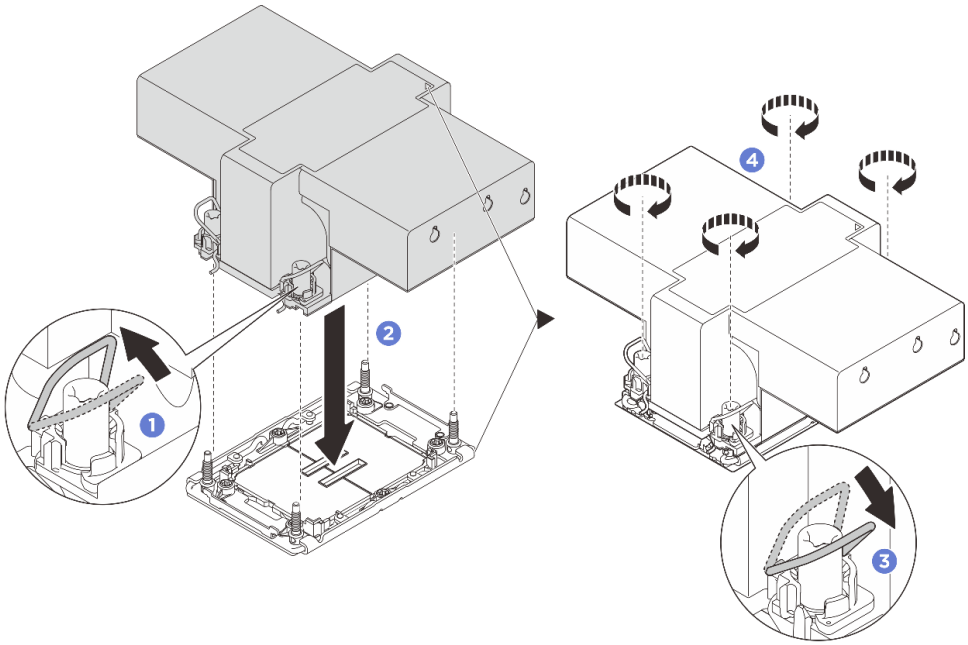

Figure 262. 2U performance PHM installation

a. ❶ Rotate the anti-tilt wire bails inward.

b. ❷ Align the triangular mark and four Torx T30 nuts on the PHM with the triangular mark and threaded posts of the processor socket; then, insert the PHM into the processor socket.

c. ❸ Rotate the anti-tilt wire bails outward until they engage with the hooks in the socket.

d. ❹ Fully tighten the Torx T30 nuts ***in the installation sequence shown*** on the heat-sink label. Tighten the screws until they stop; then, visually inspect to make sure that there is no gap

between the screw shoulder beneath the heat sink and the processor socket. (For reference, the torque required to fully tighten the nuts is 10 +/– 2.0 lbf-in, 1.1 +/– 0.2 N-m.)

After you finish

1. Reinstall all the PCIe risers if you have removed them. See “Install the PCIe riser” on page 261.
2. Reinstall the crossbar if you have removed it. See “Install the crossbar” on page 128.
3. Reinstall the rear air baffle. See “Install the rear air baffle” on page 115.
4. Reinstall the front air baffle. See “Install the front air baffle” on page 109.
5. Reinstall the rear top cover. See “Install the rear top cover” on page 373.
6. Reinstall the front top cover. See “Install the front top cover” on page 375.
7. Complete the parts replacement. See “Complete the parts replacement” on page 382.

Demo video

Watch the procedure on YouTube

Rack latches replacement

Follow the instructions in this section to remove and install the rack latches.

Remove the rack latches

Follow the instructions in this section to remove the rack latches.

About this task

- Read “Installation Guidelines” on page 45 and “Safety inspection checklist” on page 46 to ensure that you work safely.
- Power off the server and peripheral devices and disconnect the power cords and all external cables. See “Power off the server” on page 61.
- Prevent exposure to static electricity, which might lead to system halt and loss of data, by keeping static-sensitive components in their static-protective packages until installation, and handling these devices with an electrostatic-discharge wrist strap or other grounding system.

Note: This section uses the right rack latch as an example for illustration. The procedure for the left rack latch is the same.

Procedure

Step 1. If the server is installed in a rack, slide the server out on its rack slide rails to gain access to the top covers, or remove the server from the rack. See “Server replacement” on page 67.

Step 2. (Optional) Remove the security bezel. See “Remove the security bezel” on page 341.

Step 3. Remove the front top cover. See “Remove the front top cover” on page 369.

Step 4. Remove the rear top cover. See “Remove the rear top cover” on page 371.

Step 5. If you are removing the left rack latch with cables, remove PCIe riser 1 to gain access to the connector of the rack latch cable. See “Remove the PCIe riser” on page 249.

Step 6. Disconnect the cable on the rack latch from the system board assembly.

Attention: To avoid damaging the system board assembly, make sure to follow the instructions in ***Internal Cable Routing Guide*** when disconnecting cables from the system board assembly.

Step 7. Remove the screws that secure the rack latch on the side of the server.

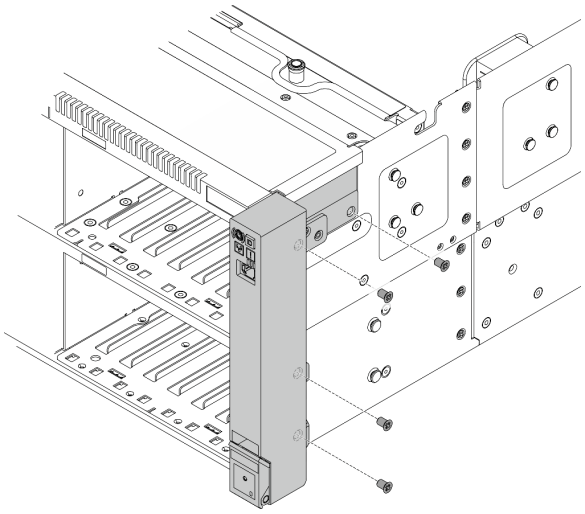

Figure 263. Removing the screws

Step 8. Slide the rack latch forward slightly and then remove the rack latch from the chassis.

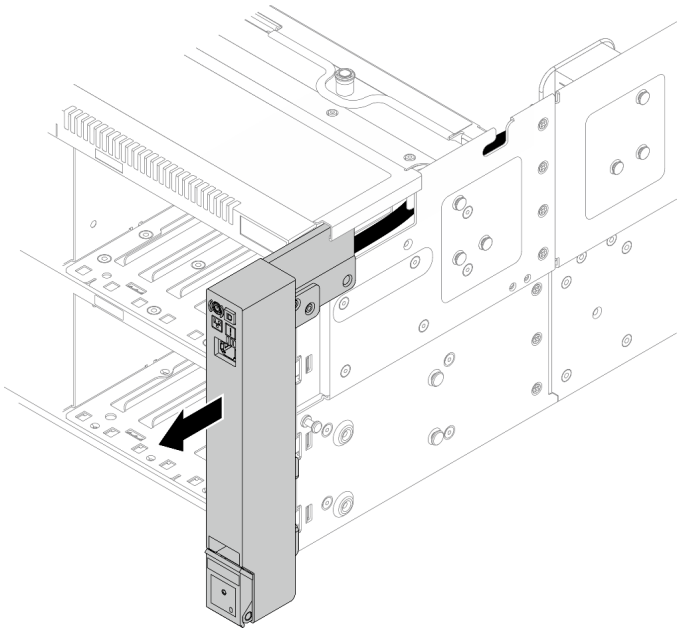

Figure 264. Removing the rack latch

After you finish

If you are instructed to return the component or optional device, follow all packaging instructions, and use any packaging materials for shipping that are supplied to you.

Demo video

Watch the procedure on YouTube

Install the rack latches

Follow the instructions in this section to install the rack latches.

About this task

Attention:
- Read “Installation Guidelines” on page 45 and “Safety inspection checklist” on page 46 to ensure that you work safely.
- Power off the server and peripheral devices and disconnect the power cords and all external cables. See “Power off the server” on page 61.
- Prevent exposure to static electricity, which might lead to system halt and loss of data, by keeping static-sensitive components in their static-protective packages until installation, and handling these devices with an electrostatic-discharge wrist strap or other grounding system.

Note: This section uses the right rack latch as an example for illustration. The procedure for the left rack latch is the same.

Procedure

Step 1. Touch the static-protective package that contains the new part to any unpainted surface on the outside of the server. Then, take the new part out of the package and place it on a static-protective surface.

Step 2. Align the rack latch cable with the cable guide on the chassis, carefully route the cable into the chassis, then press the rack latch onto the chassis and slightly slide it backward.

Note: To avoid damage to the cable, make sure that the cable is properly routed and does not cover the screw holes, as shown below.

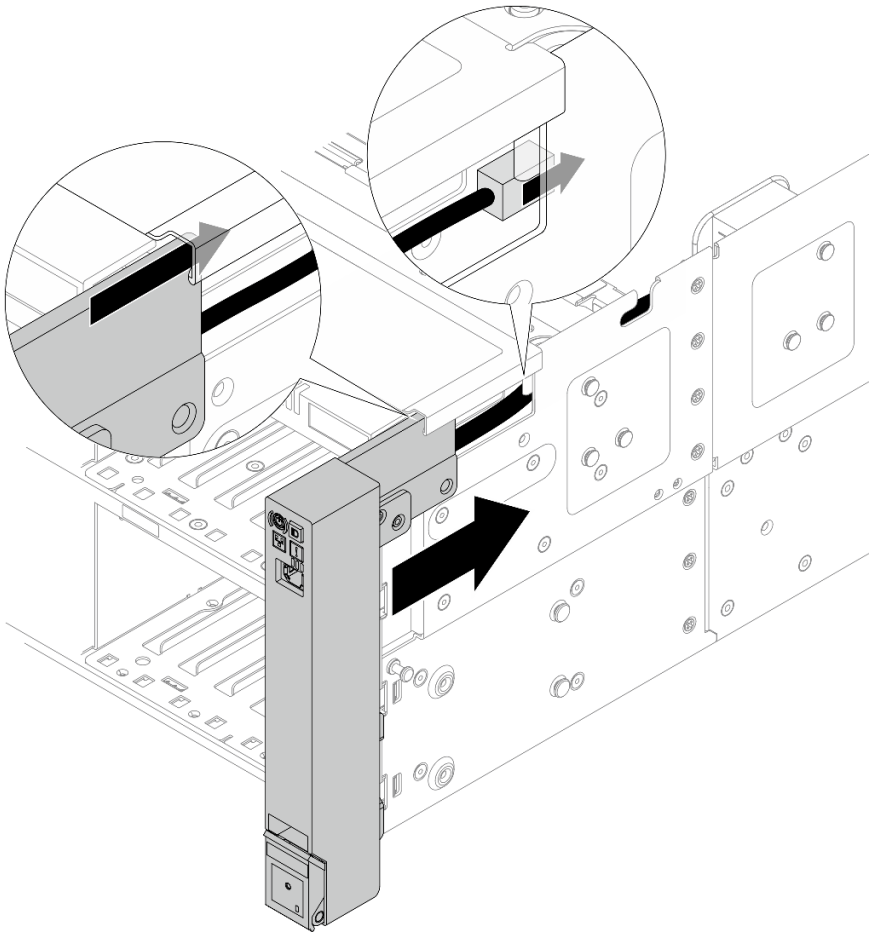

Figure 265. Installing the rack latch

Step 3. Install the screws to secure the rack latch on the side of the server.

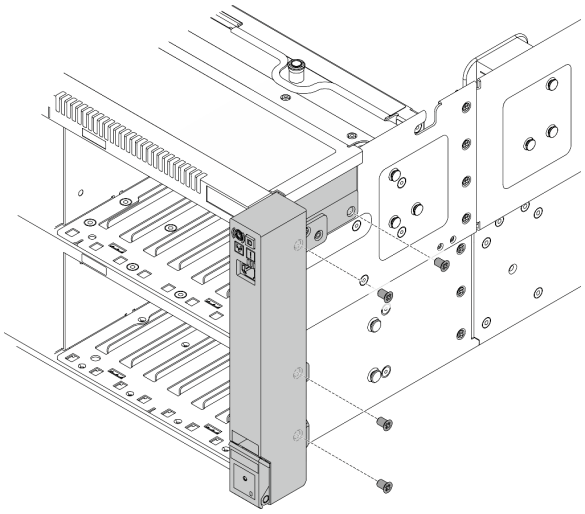

Figure 266. Installing the screws

Step 4. Connect the rack latch cable to the system board assembly. See ***Internal Cable Routing Guide*** for more information on the internal cable routing.

After you finish

1. Reinstall the rear air baffle. See “Install the rear air baffle” on page 115.
2. Reinstall the PCIe riser 1 if you have removed it. See “Install the PCIe riser” on page 261.
3. Reinstall the rear top cover. See “Install the rear top cover” on page 373.
4. Reinstall the front top cover. See “Install the front top cover” on page 375.
5. Complete the parts replacement. See “Complete the parts replacement” on page 382.
6. Reinstall the security bezel if you have removed it. See “Install the security bezel” on page 342.

Demo video

Watch the procedure on YouTube

Rear hot-swap M.2 drive assembly replacement

Follow the instructions in this section to remove and install a hot-swap M.2 drive assembly.

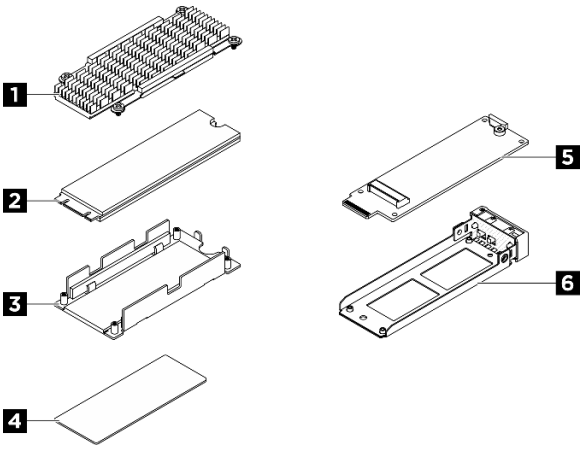

Figure 267. Parts of a hot-swap M.2 drive assembly

1 Heat sink	2 M.2 drive
3 Bottom plate	4 Thermal pad
5 M.2 interposer	6 M.2 drive tray

Remove a hot-swap M.2 drive assembly

Follow the instructions in this section to remove a hot-swap M.2 drive assembly.

About this task

Attention:

- Read “Installation Guidelines” on page 45 and “Safety inspection checklist” on page 46 to ensure that you work safely.
- To make sure that there is adequate system cooling, do not operate the server for more than two minutes without either a drive or a filler installed in each bay.
- If one or more NVMe solid-state drives are to be removed, it is recommended to disable them beforehand via the operating system.

- Before you remove or make changes to drives, drive controllers (including controllers that are integrated on the system board), drive backplanes or drive cables, back up all important data that is stored on drives.
- Before you remove any component of a RAID array (drive, RAID card, etc.), back up all RAID configuration information.

Procedure

Step 1. Remove a hot-swap M.2 drive assembly.

a. ❶ Slide the release latch to unlock the handle.

b. ❷ Rotate the handle to the open position.

c. ❸ Grasp the handle and slide the drive assembly out of the drive bay.

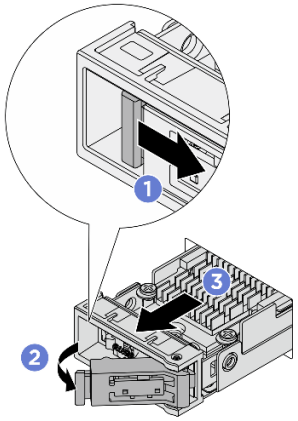

Figure 268. Removing a hot-swap M.2 drive assembly

Step 2. Install a drive tray or replacement drive assembly as soon as possible.

a. To install a replacement drive assembly, see “Install a hot-swap M.2 drive assembly” on page 330.

b. If no replacement drive assembly is to be installed, install a drive tray to the vacant drive bay for adequate system cooling. To separate the drive tray from the hot-swap M.2 drive assembly, see “Disassemble an M.2 drive assembly” on page 324.

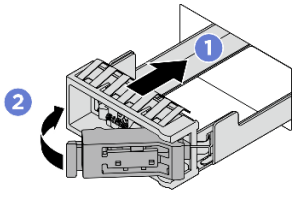

Figure 269. Installing an M.2 drive tray

❶ Make sure that the handle is in the open position. Then, align the tray with the guide rails in the bay and gently push the tray into the bay until the tray stops.

❷ Rotate the handle to the fully closed position until the handle latch clicks.

After you finish

If you are instructed to return the component or optional device, follow all packaging instructions, and use any packaging materials for shipping that are supplied to you.

Demo video

Watch the procedure on YouTube

Disassemble an M.2 drive assembly

Follow the instructions in this section to disassemble an M.2 drive assembly.

About this task

Attention:

- Read “Installation Guidelines” on page 45 and “Safety inspection checklist” on page 46 to ensure that you work safely.
- Power off the server and peripheral devices and disconnect the power cords and all external cables. See “Power off the server” on page 61.
- Prevent exposure to static electricity, which might lead to system halt and loss of data, by keeping static-sensitive components in their static-protective packages until installation, and handling these devices with an electrostatic-discharge wrist strap or other grounding system.

Procedure

Step 1. Remove the hot-swap M.2 drive assembly from the chassis. See “Remove a hot-swap M.2 drive assembly” on page 322.

Step 2. Remove the M.2 drive with heat sink from the interposer.

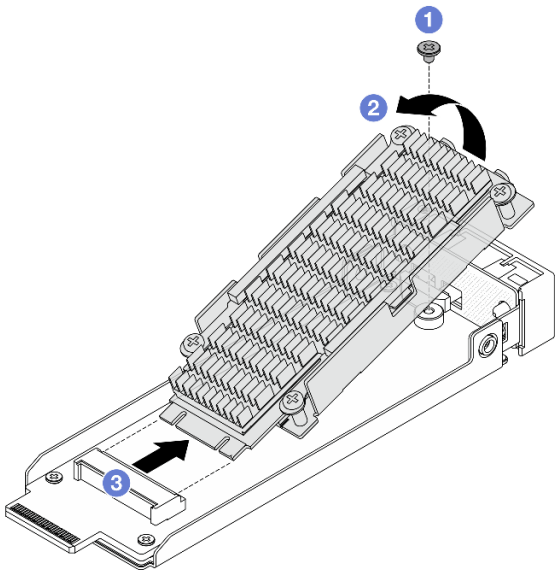

Figure 270. Remove the M.2 drive with heat sink

a. 1 Loosen one screw that secures the M.2 drive.
b. 2 Lift one side of the drive as illustrated above.
c. 3 Remove the M.2 drive from the interposer slot.

Step 3. Remove the M.2 interposer.

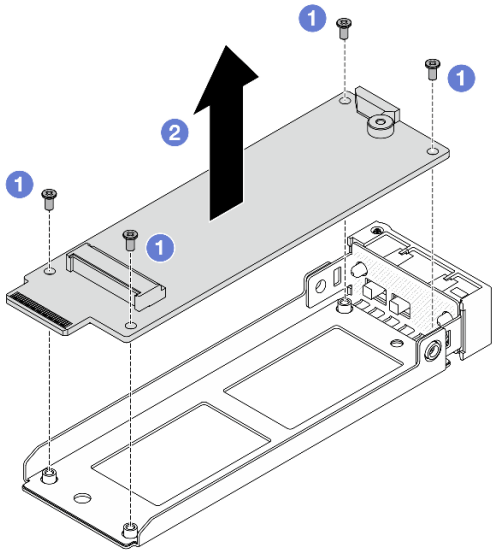

Figure 271. Removing M.2 interposer

a. 1 Loosen four screws that secure the M.2 interposer.

b. 2 Lift the interposer off the tray.

Step 4. If necessary, separate the M.2 drive and the heat sink.

Note: Once the heat sink and bottom plate are separated from the M.2 drive, the used thermal pads are not reusable. If the heat sink and bottom plate are to be reused, clean up the thermal pad residue and apply new thermal pads.

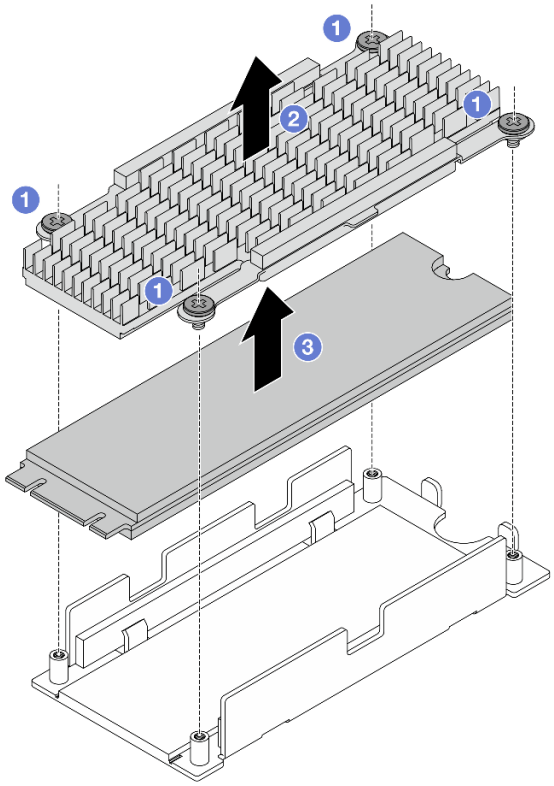

Figure 272. Separating M.2 drive and heat sink

a. ❶ Loosen four screws that secure the heat sink.
b. ❷ Lift the heat sink off the bottom plate.
c. ❸ Lift the drive off the bottom plate.

Step 5. If the bottom plate and heat sink are to be reused, clean up the residue of the thermal pads.

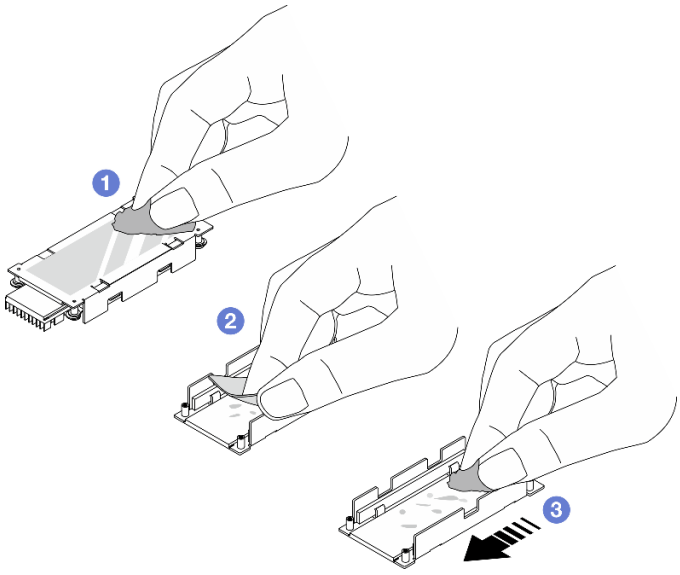

Figure 273. Cleaning heat sink and bottom plate

a. ❶ Clean up the thermal pad residue on the back of the heat sink with an alcohol cleaning pad.
b. ❷ Peel off the thermal pad on the bottom plate.
c. ❸ Clean up the residue by swiping with an alcohol cleaning towel in one direction.

After you finish

If you are instructed to return the component or optional device, follow all packaging instructions, and use any packaging materials for shipping that are supplied to you.

Demo video

Watch the procedure on YouTube

Assemble the rear M.2 interposer and drive

Follow the instructions in this section to assemble the rear M.2 interposer and drive.

About this task

Attention:

- Read “Installation Guidelines” on page 45 and “Safety inspection checklist” on page 46 to ensure that you work safely.
- Power off the server and peripheral devices and disconnect the power cords and all external cables. See “Power off the server” on page 61.
- Prevent exposure to static electricity, which might lead to system halt and loss of data, by keeping static-sensitive components in their static-protective packages until installation, and handling these devices with an electrostatic-discharge wrist strap or other grounding system.

Procedure

Step 1. If necessary, install a new heat sink to the M.2 drive.
a. Before installing a new heat sink to the M.2 drive, peel off the films on the thermal pads.

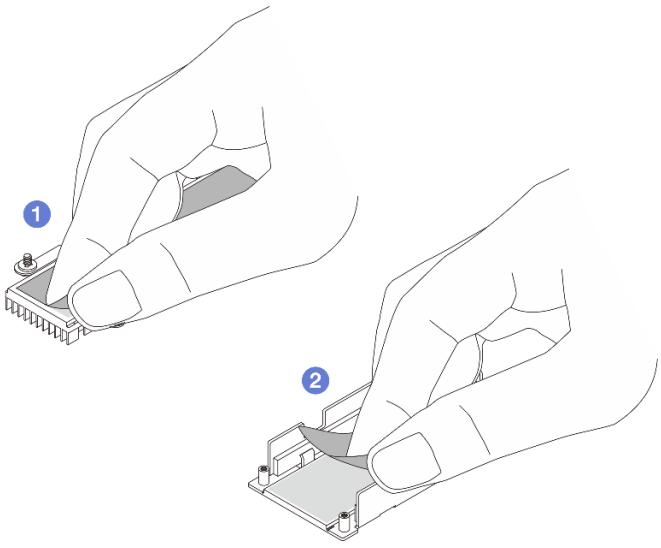

Figure 274. Peeling off the films

1. Peel off the film on the heat sink thermal pad.
2. Peel off the film on the tray thermal pad.

b. Combine the heat sink and the M.2 drive.

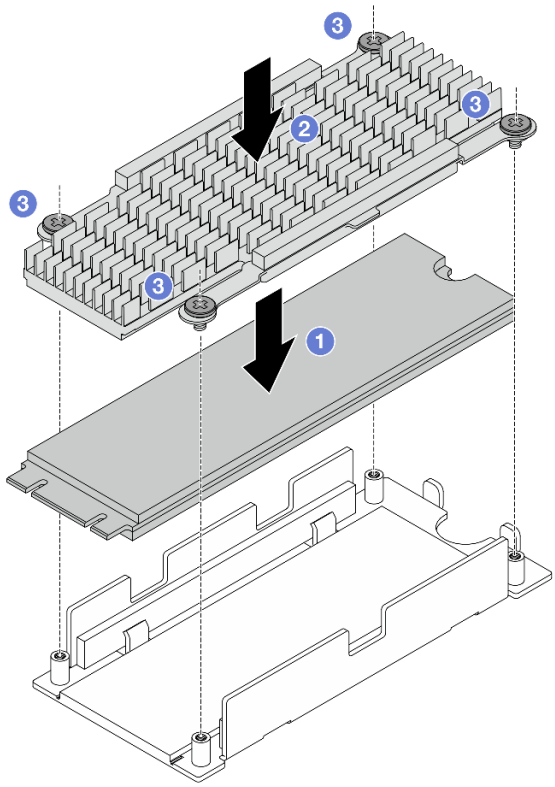

Figure 275. Assembling heat sink and M.2 drive

1. Place the M.2 drive on the bottom plate.
2. Align the heat sink to the guiding pins on the bottom plate.
3. Tighten four screws to secure the drive and heat sink.

Step 2. Install the M.2 interposer to the tray.

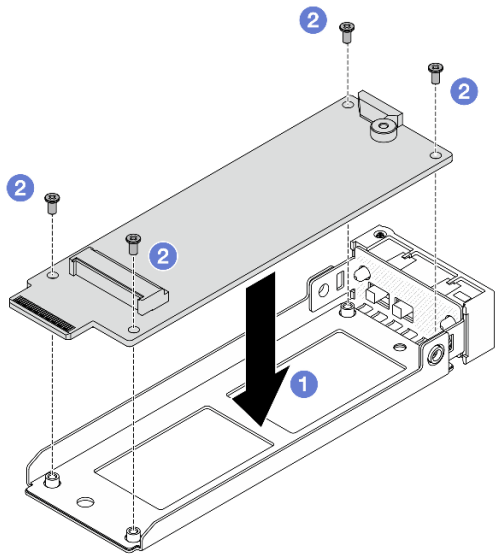

Figure 276. Installing M.2 interposer

a. 1 Align the interposer to the guiding pins on the tray.
b. 2 Tighten four screws to secure the interposer.

Step 3. Install the M.2 drive with heat sink to the interposer

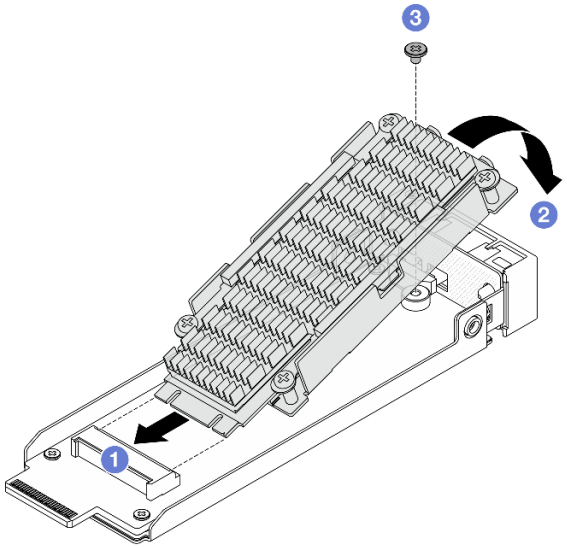

Figure 277. Installing the M.2 drive with heat sink

a. 1 Hold the M.2 drive with heat sink at an angle, and insert the drive to the interposer slot.
b. 2 Press the drive down to the interposer.
c. 3 Tighten one screw to secure the drive.

After you finish

Complete the parts replacement. See “Complete the parts replacement” on page 382.

Demo video

Watch the procedure on YouTube

Install a hot-swap M.2 drive assembly

Follow the instructions in this section to install a hot-swap M.2 drive assembly.

About this task

Attention:

- Read “Installation Guidelines” on page 45 and “Safety inspection checklist” on page 46 to ensure that you work safely.
- Touch the static-protective package that contains the drive to any unpainted metal surface on the solution; then, remove the drive from the package and place it on a static-protective surface.
- Make sure you save the data on your drive, especially if it is part of a RAID array, before you remove it from the server.
- To avoid damage to the drive connectors, make sure that the server top cover is in place and fully closed whenever you install or remove a drive.
- To make sure that there is adequate system cooling, do not operate the server for more than two minutes without either a drive or a drive bay filler installed in each bay.
- Before you make changes to drives, drive controllers (including controllers that are integrated on the system board), drive backplanes, or drive cables, back up all important data that is stored on drives.
- Before you remove any component of a RAID array (drive, RAID card, etc.), back up all RAID configuration information.

The following notes describe the type of drives that the server supports and other information that you must consider when you install a drive. For a list of supported drives, see https://serverproven.lenovo.com.

- Locate the documentation that comes with the drive and follow those instructions in addition to the instructions in this chapter.
- The electromagnetic interference (EMI) integrity and cooling of the solution are protected by having all bays and PCI and PCIe slots covered or occupied. When you install a drive, PCI, or PCIe adapter, save the EMC shield and filler panel from the bay or PCI or PCIe adapter slot cover in the event that you later remove the device.
- For a complete list of supported optional devices for the server, see https://serverproven.lenovo.com.
- The drive bays are numbered to indicate the installation order (starting from number “0”).
  - For hot-swap M.2 drive assembly to be installed at front of the server, see “Front view” on page 19 for the drive bay numbering.
  - For hot-swap M.2 drive assembly to be installed at rear of the server, the left bay is M.2 Bay 0, and the right bay is M.2 Bay 1.

Firmware and driver download: You might need to update the firmware or driver after replacing a component.

- Go to https://datacentersupport.lenovo.com/products/servers/thinksystem/sr860v4/7djn/downloads/driver-list to see the latest firmware and driver updates for your server.
- Go to “Update the firmware” on page 386 for more information on firmware updating tools.

Procedure

Step 1. If a drive tray is installed in the drive bay, remove the tray.

a. 1 Slide the release latch to unlock the handle.

b. 2 Rotate the handle to the open position.

c. 3 Grasp the handle and slide the tray out of the drive bay.

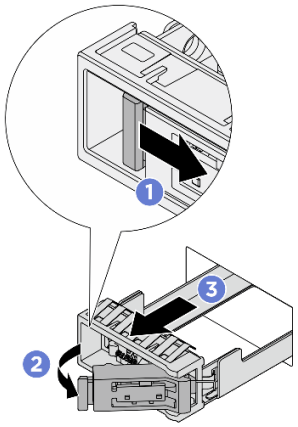

Figure 278. Removing an M.2 drive tray

Step 2. Install the hot-swap M.2 drive assembly.

a. 1 Make sure that the handle is in the open position. Then, align the drive assembly with the guide rails in the bay and gently push the drive assembly into the bay until the drive assembly stops.

b. 2 Rotate the handle to the fully closed position until the handle latch clicks.

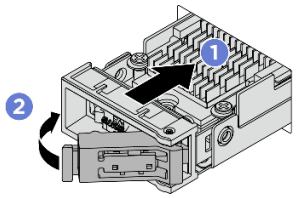

Figure 279. Installing an M.2 drive assembly

Step 3. If there is another M.2 drive assembly to install, do so now; if any of the drive bays is left empty, fill it with a drive tray to the vacant drive bay for adequate system cooling. See “Remove a hot-swap M.2 drive assembly” on page 322 for the details of installing M.2 drive tray.

Step 4. Check the drive status LED to verify that the drive is operating correctly.

- If the yellow drive status LED is lit continuously, the drive is malfunctioning and must be replaced.
- If the green drive activity LED is flashing, the drive is functioning.

After you finish

If the server is configured for RAID operation through a ThinkSystem RAID adapter, you might have to reconfigure your disk arrays after you install drives. See the ThinkSystem RAID adapter documentation for additional information about RAID operation and complete instructions for using ThinkSystem RAID adapter.

Demo video

Watch the procedure on YouTube

Rear M.2 drive cage and M.2 boot adapter replacement

Follow the instructions in this section to remove and install the rear M.2 drive cage and M.2 boot adapter.

Remove the rear M.2 drive cage and M.2 boot adapter

Follow the instructions in this section to remove the rear M.2 drive cage and M.2 boot adapter.

About this task

Attention:

- Read “Installation Guidelines” on page 45 and “Safety inspection checklist” on page 46 to ensure that you work safely.
- Power off the server and peripheral devices and disconnect the power cords and all external cables. See “Power off the server” on page 61.
- Prevent exposure to static electricity, which might lead to system halt and loss of data, by keeping static-sensitive components in their static-protective packages until installation, and handling these devices with an electrostatic-discharge wrist strap or other grounding system.
- If the server is installed in a rack, slide the server out on its rack slide rails to gain access to the top covers, or remove the server from the rack. See “Server replacement” on page 67.

The server supports one of the following M.2 drive cage assembly installed on PCIe riser 3.

Two-slot FH riser with M.2 drive cage at top	Six-slot FH riser with M.2 drive cage at bottom
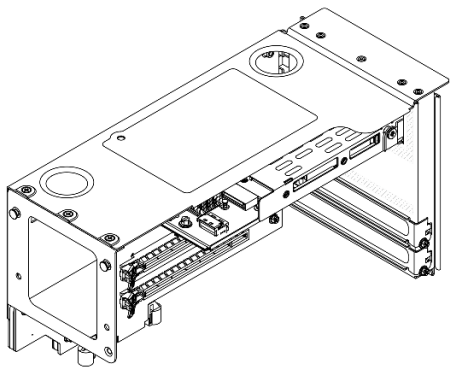	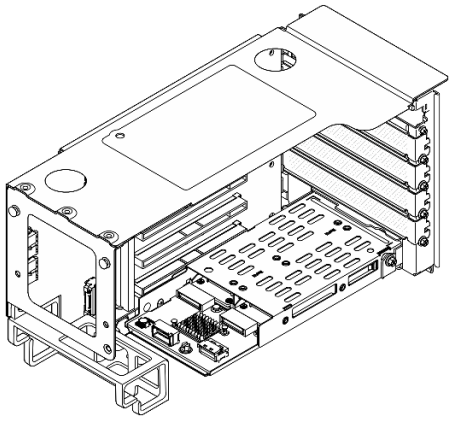

Note: The M.2 boot adapter and drive shown in the illustrations are for reference only and may differ from your actual hardware.

Depending on your configuration, follow the corresponding procedures below for proper removal procedure.

- “Remove the M.2 drive cage and M.2 boot adapter from the two-slot FH riser” on page 333
- “Remove the M.2 drive cage and M.2 boot adapter from the six-slot FH riser” on page 334

Remove the M.2 drive cage and M.2 boot adapter from the two-slot FH riser

Procedure

Step 1. Remove all hot-swap M.2 drives. See “Remove a hot-swap M.2 drive assembly” on page 322.

Step 2. If the server is installed in a rack, slide the server out on its rack slide rails to gain access to the top covers, or remove the server from the rack. See “Server replacement” on page 67.

Step 3. Remove the front top cover. See “Remove the front top cover” on page 369.

Step 4. Remove the rear top cover. See “Remove the rear top cover” on page 371.

Step 5. Remove the crossbar. See “Remove the crossbar” on page 125.

Step 6. Remove the PCIe riser where the M.2 drive cage is installed. “Remove the PCIe riser” on page 249.

Step 7. Disconnect all the cables connected to the M.2 boot adapter and record them.

Step 8. Remove the M.2 drive cage.

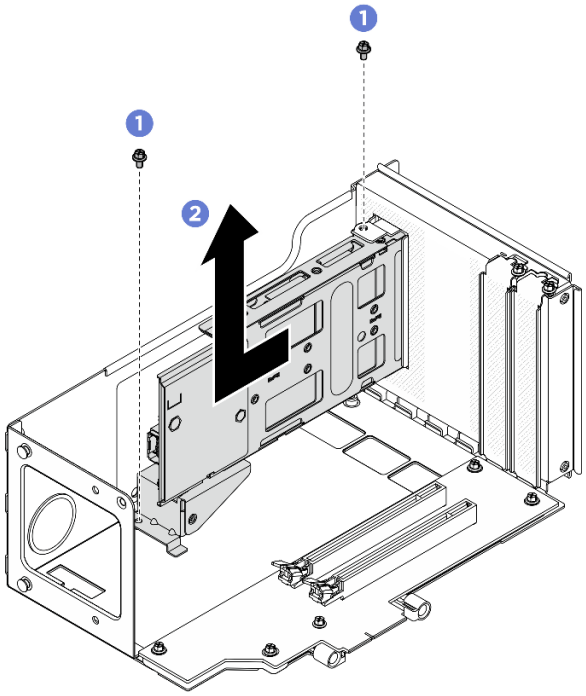

Figure 280. Removing the M.2 drive cage from the two-slot FH riser

a. 1 Remove the two screws that secure the drive cage to the PCIe riser cage.

b. 2 Remove the drive cage from the PCIe riser cage.

Step 9. Remove the rear M.2 boot adapter.

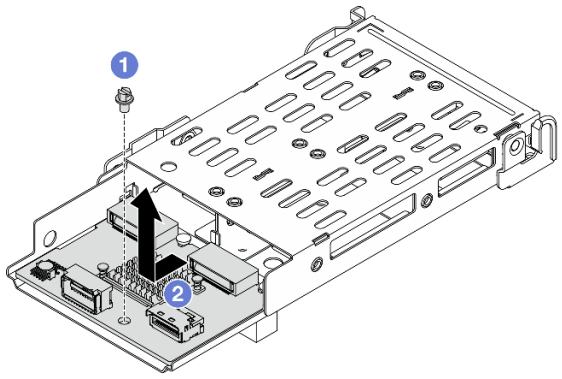

Figure 281. Removing the M.2 boot adapter

a. 1 Loosen one screw the locks the backplane to the cage.

b. 2 Slide the backplane as illustrated above and lift it off from the cage.

Step 10. If necessary, remove the M.2 drive cage bracket.

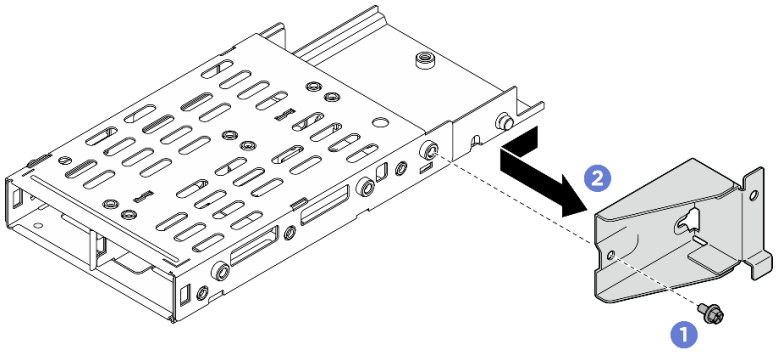

Figure 282. Removing the M.2 drive cage bracket

a. 1 Remove the screw that secures the M.2 drive cage bracket.

b. 2 Slide the M.2 drive cage bracket as illustrated above and remove it.

Remove the M.2 drive cage and M.2 boot adapter from the six-slot FH riser

Procedure

Step 1. Remove all hot-swap M.2 drives. See “Remove a hot-swap M.2 drive assembly” on page 322.

Step 2. If the server is installed in a rack, slide the server out on its rack slide rails to gain access to the top covers, or remove the server from the rack. See “Server replacement” on page 67.

Step 3. Remove the front top cover. See “Remove the front top cover” on page 369.

Step 4. Remove the rear top cover. See “Remove the rear top cover” on page 371.

Step 5. Remove the crossbar. See “Remove the crossbar” on page 125.

Step 6. Remove the PCIe riser where the M.2 drive cage is installed. “Remove the PCIe riser” on page 249.

Step 7. Disconnect all the cables connected to the M.2 boot adapter and record them.

Step 8. Remove the M.2 drive cage.

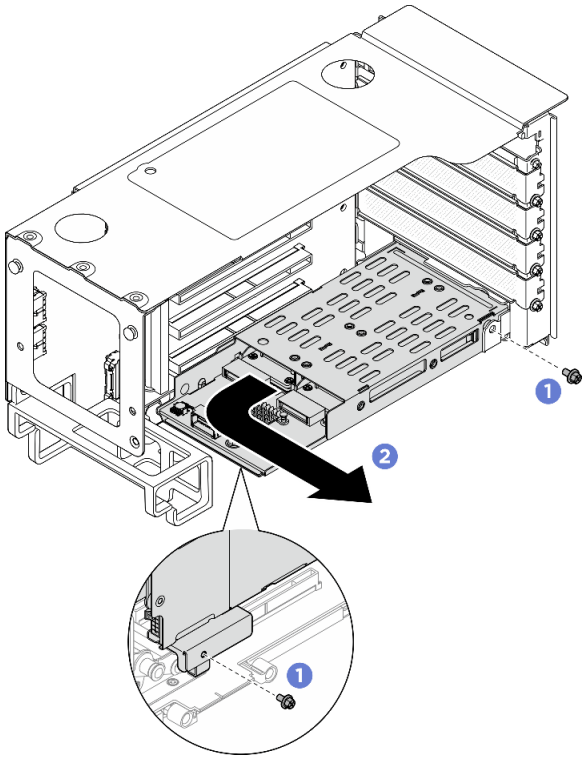

Figure 283. Removing the M.2 drive cage from the six-slot FH riser

a. ❶ Remove the two screws that secure the drive cage to the PCIe riser.
b. ❷ Rotate the drive cage outwards away from the PCIe riser cage to remove it.

Step 9. Remove the rear M.2 boot adapter.

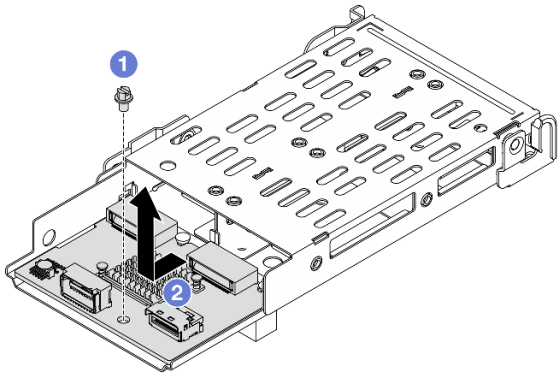

Figure 284. Removing the M.2 boot adapter

a. ❶ Loosen one screw that locks the backplane to the cage.
b. ❷ Slide the backplane as illustrated above and lift it off from the cage.

Step 10. If necessary, remove the M.2 drive cage bracket.

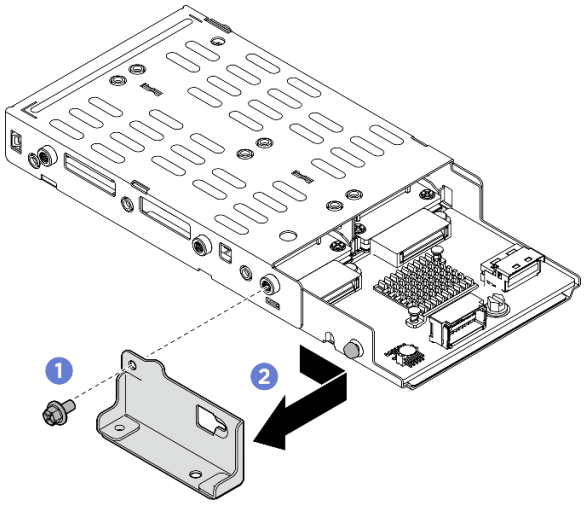

Figure 285. Removing the M.2 drive cage bracket

a. 1 Remove the screw that secures the M.2 drive cage bracket.
b. 2 Slide the M.2 drive cage bracket as illustrated above and remove it.

After you finish

1. Install a replacement unit or a filler. See "Install the rear M.2 drive cage and M.2 boot adapter" on page 336.
2. If you are instructed to return the component or optional device, follow all packaging instructions, and use any packaging materials for shipping that are supplied to you.

Demo video

Watch the procedure on YouTube

Install the rear M.2 drive cage and M.2 boot adapter

Follow the instructions in this section to install the rear M.2 drive cage and M.2 boot adapter.

About this task

Attention:
- Read "Installation Guidelines" on page 45 and "Safety inspection checklist" on page 46 to ensure that you work safely.
- Power off the server and peripheral devices and disconnect the power cords and all external cables. See "Power off the server" on page 61.
- Prevent exposure to static electricity, which might lead to system halt and loss of data, by keeping static-sensitive components in their static-protective packages until installation, and handling these devices with an electrostatic-discharge wrist strap or other grounding system.

The server supports one of the following M.2 drive cage assembly installed on PCIe riser 3.

Two-slot FH riser with M.2 drive cage at top	Six-slot FH riser with M.2 drive cage at bottom
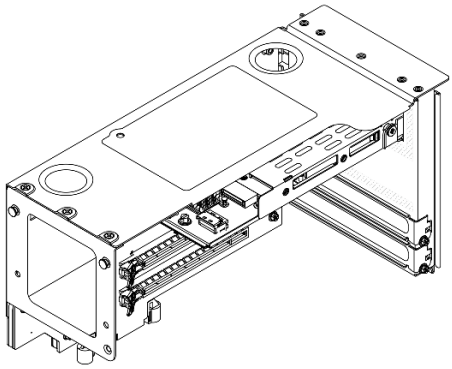	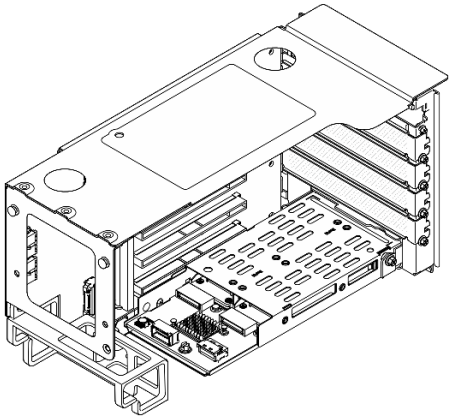

Note: The M.2 boot adapter and drive shown in the illustrations are for reference only and may differ from your actual hardware.

Depending on your configuration, follow the corresponding procedures below for proper removal procedure.

- "Install the M.2 boot adapter and M.2 drive cage to the two-slot FH riser" on page 337
- "Install the M.2 boot adapter and M.2 drive cage to the six-slot FH riser" on page 338

Install the M.2 boot adapter and M.2 drive cage to the two-slot FH riser

Procedure

Step 1. Install the rear M.2 boot adapter to the M.2 cage.

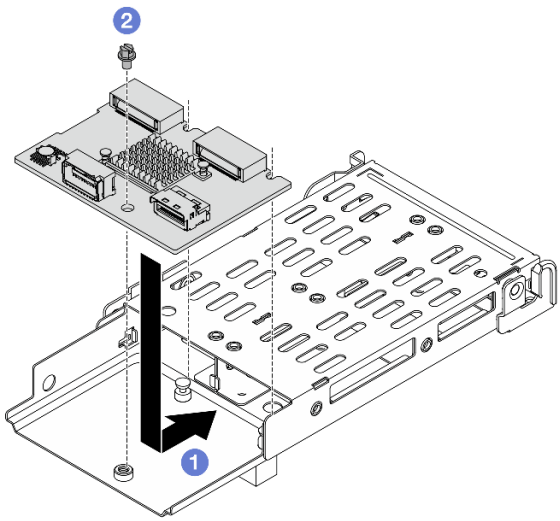

Figure 286. Installing the M.2 boot adapter

a. 1 Place the backplane on the cage and slide it as illustrated above to engage it.

b. 2 Tighten one screw to secure it to the cage.

Step 2. Install the M.2 drive cage bracket.

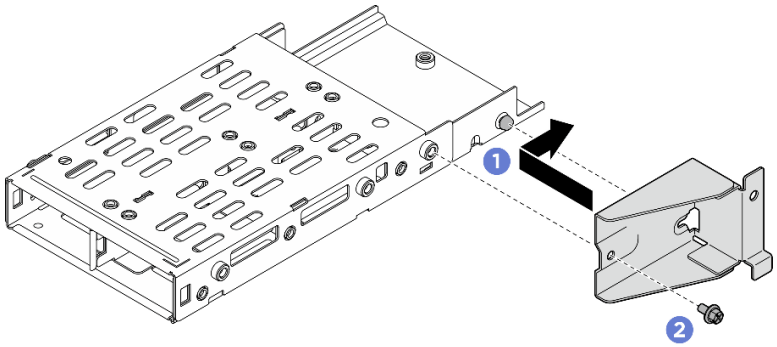

Figure 287. Install the M.2 drive cage bracket

a. ❶ Align the M.2 drive cage bracket with the drive cage and slide it as illustrated above.
b. ❷ Secure the M.2 drive cage bracket with a screw.

Step 3. Install the M.2 drive cage.

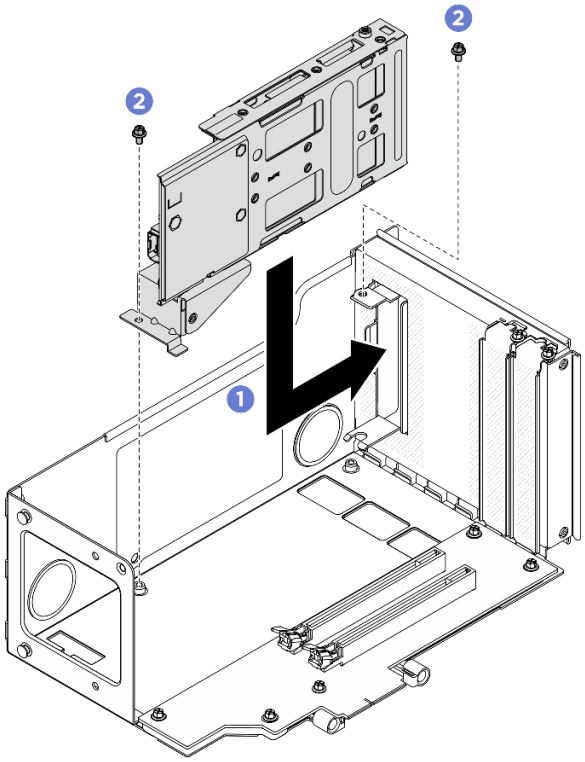

Figure 288. Installing the M.2 drive cage to riser

a. ❶ Install the drive cage into the PCIe riser cage.
b. ❷ Secure the drive cage with two screws.

Step 4. Connect all cables to the M.2 boot adapter.

Install the M.2 boot adapter and M.2 drive cage to the six-slot FH riser

Procedure

Step 1. Install the rear M.2 boot adapter to the M.2 cage.

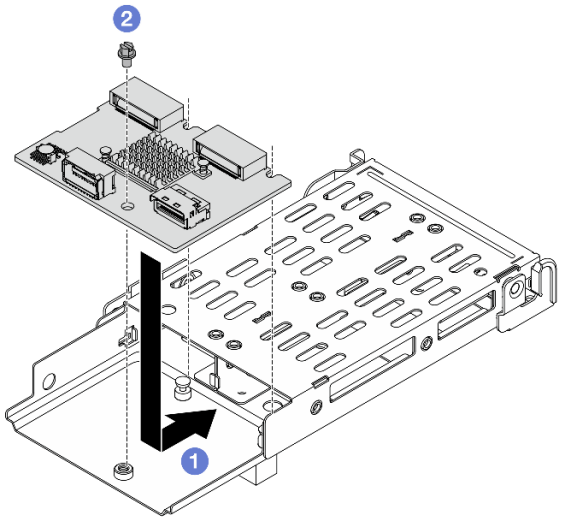

Figure 289. Installing the M.2 boot adapter

a. ❶ Place the backplane on the cage and slide it as illustrated above to engage it.
b. ❷ Tighten one screw to secure it to the cage.

Step 2. Install the M.2 drive cage bracket.

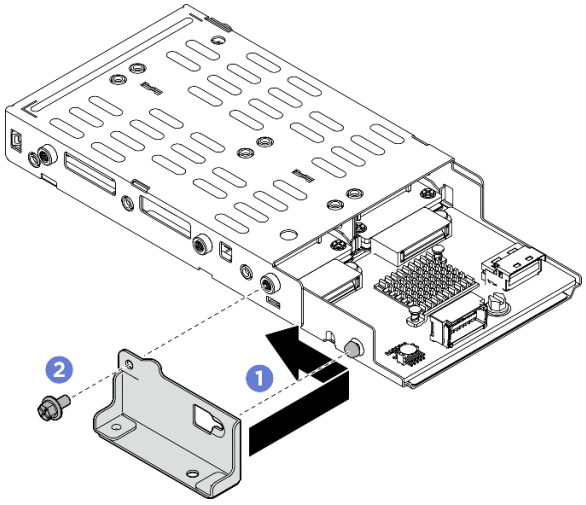

Figure 290. Install the M.2 drive cage bracket

a. ❶ Align the M.2 drive cage bracket with the drive cage and slide it as illustrated above.
b. ❷ Secure the M.2 drive cage bracket with a screw.

Step 3. Install the M.2 drive cage.

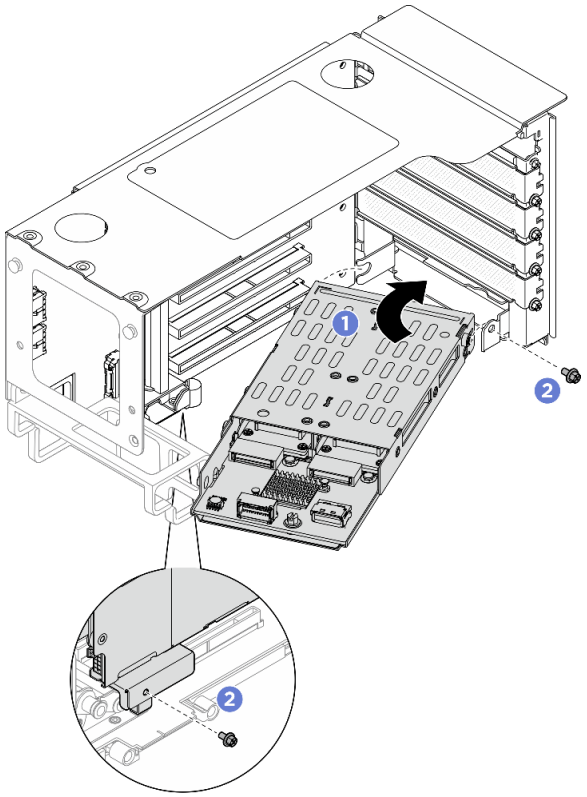

Figure 291. Installing the M.2 drive cage to the six-slot FH riser

a. 1 Install the drive cage into the PCIe riser cage.

b. 2 Secure the drive cage with two screws.

Step 4. Connect all cables to the M.2 boot adapter.

After you finish

1. Reinstall the PCIe risers. See “Install the PCIe riser” on page 261.
2. Reinstall the crossbar. See “Install the crossbar” on page 128.
3. Reinstall the rear top cover. See “Install the rear top cover” on page 373.
4. Reinstall the front top cover. See “Install the front top cover” on page 375.
5. Complete the parts replacement. See “Complete the parts replacement” on page 382.
6. If necessary, use the Lenovo XClarity Provisioning Manager to configure the RAID. For more information, see:
   https://pubs.lenovo.com/lxpm-overview/.

Demo video

Watch the procedure on YouTube

Security bezel replacement

Follow instructions in this section to remove and install the security bezel.

Remove the security bezel

Follow instructions in this section to remove the security bezel.

About this task

Attention: Read “Installation Guidelines” on page 45 and “Safety inspection checklist” on page 46 to ensure that you work safely.

Procedure

Step 1. Use the key to unlock the security bezel.

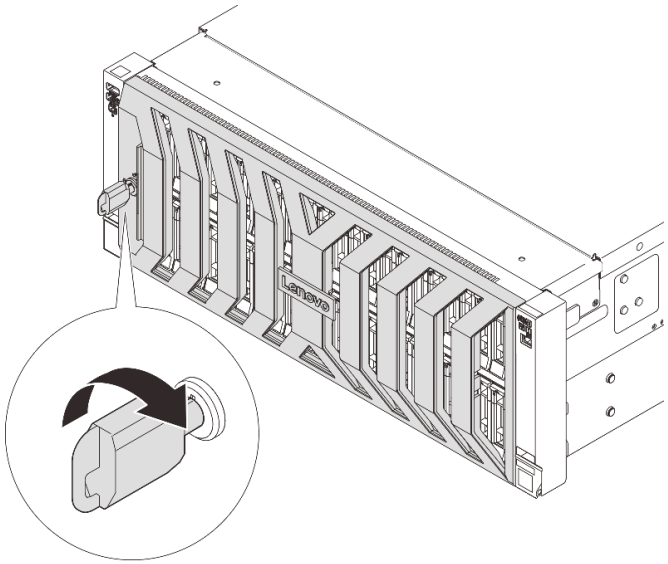

Figure 292. Unlocking the security bezel

Step 2. Remove the security bezel.

Attention: Before you ship the rack with the server installed, reinstall and lock the security bezel into place.

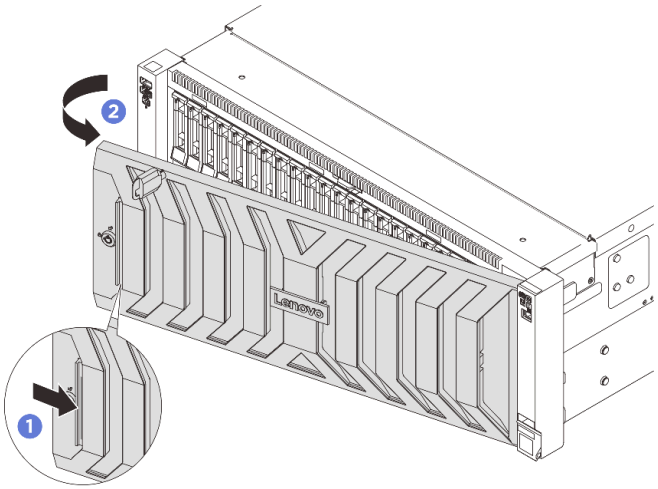

Figure 293. Security bezel removal

a. 1 Press the release latch.
b. 2 Rotate the security bezel outward to remove it from the chassis.

After you finish

If you are instructed to return the component or optional device, follow all packaging instructions, and use any packaging materials for shipping that are supplied to you.

Demo video

Watch the procedure on YouTube

Install the security bezel

Follow instructions in this section to install the security bezel.

About this task

Attention: Read “Installation Guidelines” on page 45 and “Safety inspection checklist” on page 46 to ensure that you work safely.

Procedure

Step 1. If the key is held inside the security bezel, remove it out of the security bezel.

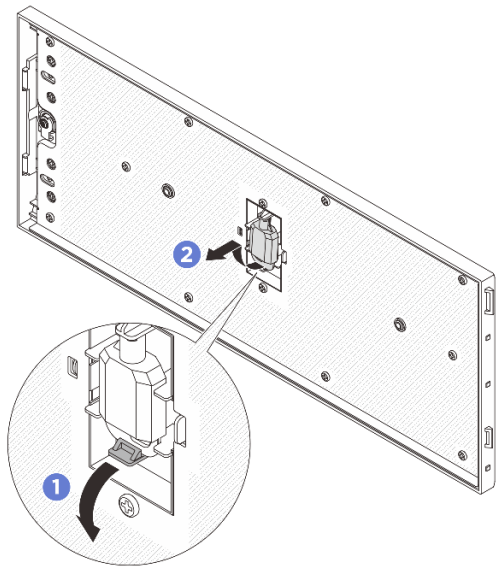

Figure 294. Key removal

a. ❶ Press the latch to release the key.
b. ❷ Remove the key from the retaining clip in the shown direction.

Step 2. Install the security bezel to the chassis.

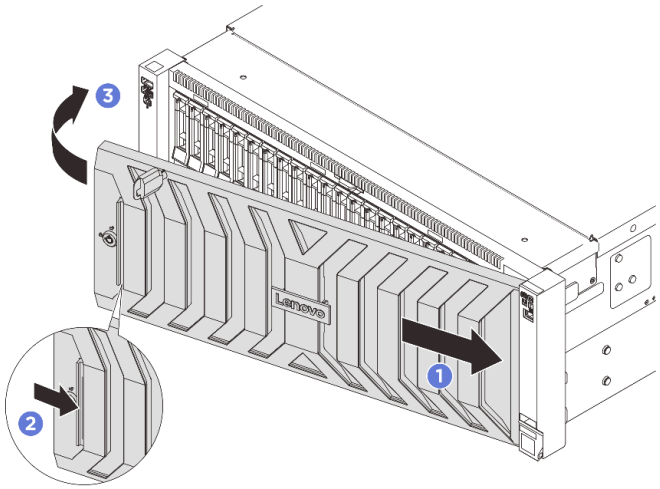

Figure 295. Security bezel installation

a. ❶ Insert the tab on the security bezel into the slot on the right rack latch.
b. ❷ Press and hold the blue release latch.
c. ❸ Rotate the security bezel inward until the left side clicks into place.

Step 3. Use the key to lock the security bezel to the closed position.

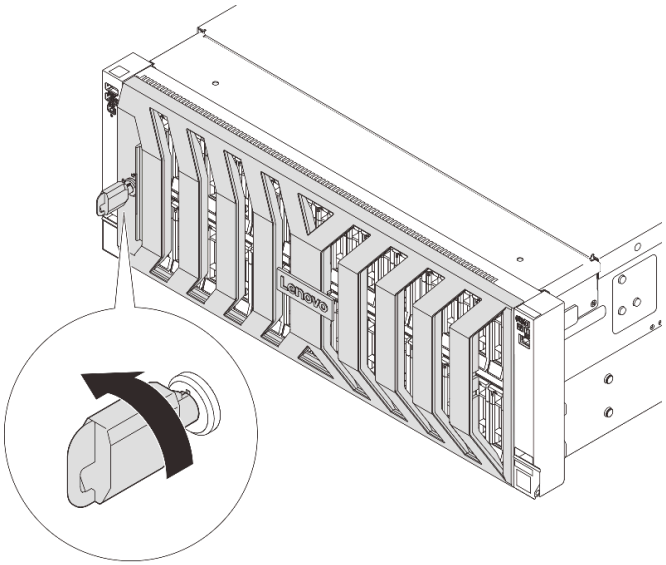

Figure 296. Locking the security bezel

After you finish

Complete the parts replacement. See “Complete the parts replacement” on page 382.

Demo video

Watch the procedure on YouTube

Serial port module replacement

Follow instructions in this section to remove and install the serial port module.

Remove the serial port module

Follow the instructions in this section to remove the serial port module.

About this task

Attention:

- Read “Installation Guidelines” on page 45 and “Safety inspection checklist” on page 46 to ensure that you work safely.
- Power off the server and peripheral devices and disconnect the power cords and all external cables. See “Power off the server” on page 61.
- Prevent exposure to static electricity, which might lead to system halt and loss of data, by keeping static-sensitive components in their static-protective packages until installation, and handling these devices with an electrostatic-discharge wrist strap or other grounding system.

Procedure

Step 1. If the server is installed in a rack, slide the server out on its rack slide rails to gain access to the top covers, or remove the server from the rack. See “Server replacement” on page 67.

Step 2. Remove the front top cover. See “Remove the front top cover” on page 369.

Step 3. Remove the rear top cover. See “Remove the rear top cover” on page 371.

Step 4. Remove the crossbar. See “Remove the crossbar” on page 125.

Step 5. Remove the PCIe risers. See “Remove the PCIe riser” on page 249.

Step 6. Disconnect the serial port module from the connector 1 on the system board assembly.

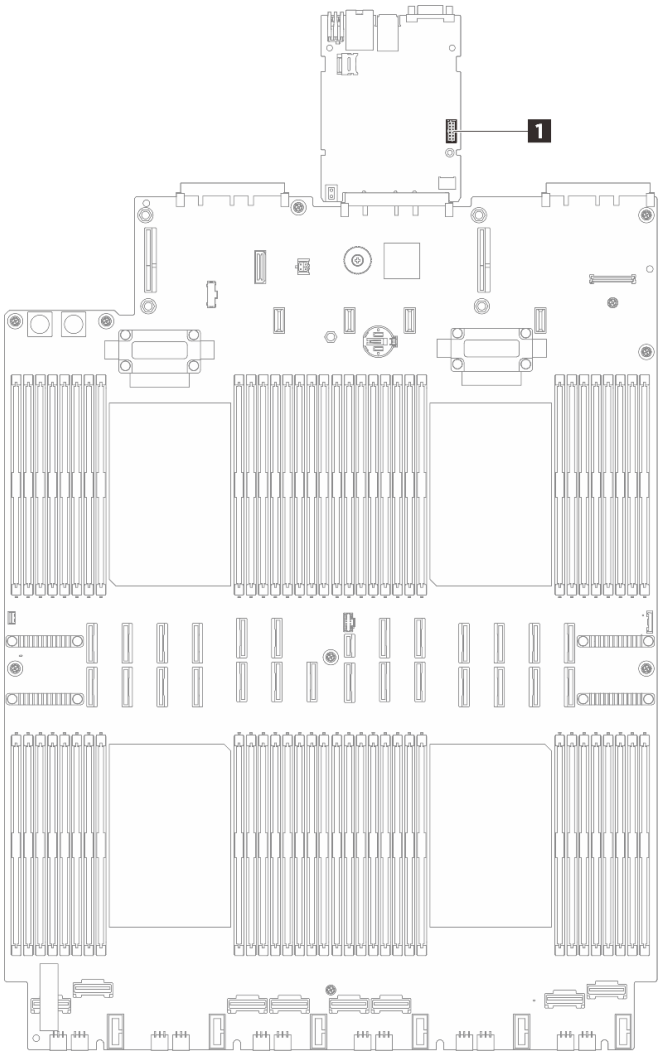

Figure 297. Disconnecting serial port module

Step 7. Remove the serial port module.

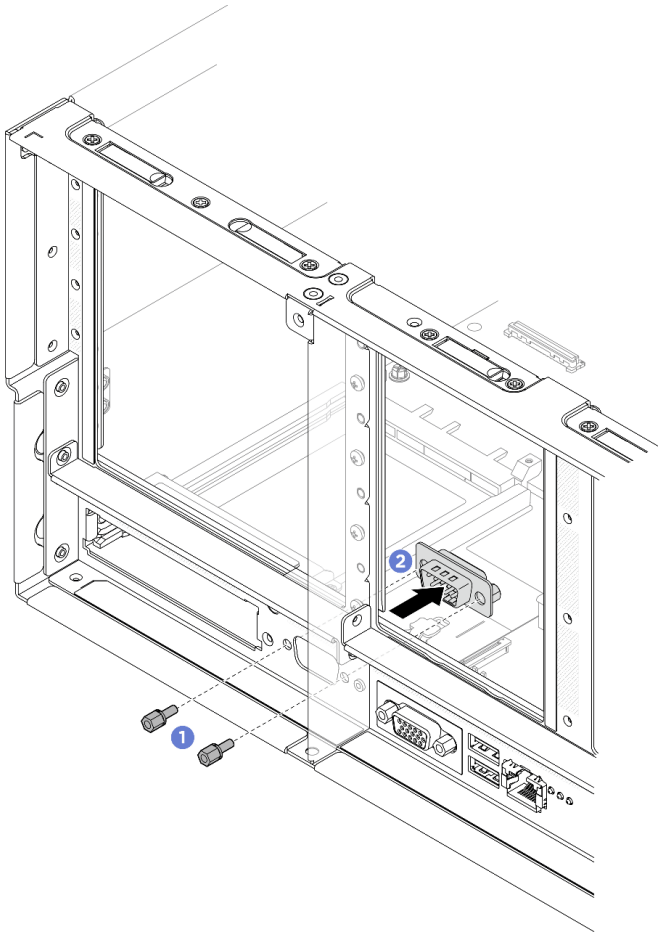

Figure 298. Removing serial port module

a. 1 Remove the retention screws on the rear of the chassis.

b. 2 Push the serial port module out of the serial port hole and remove it from the chassis.

Step 8. If necessary, install the serial port filler.

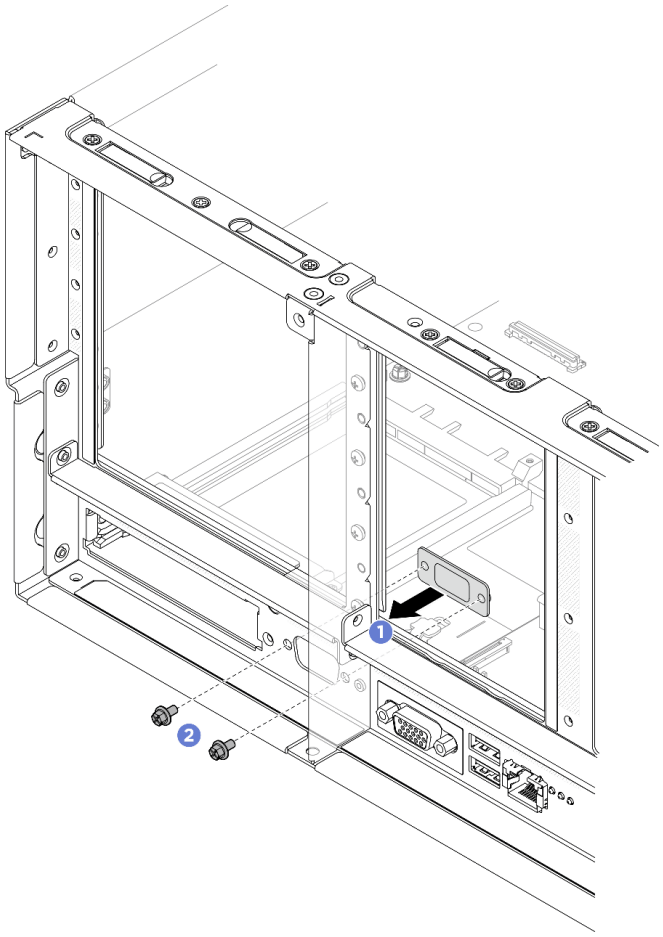

Figure 299. Installing serial port filler

a. 1 Align and install the serial port filler into the serial port hole from inside of the server chassis.
b. 2 Secure the serial port filler with the retention screws.

After you finish

1. Install a replacement unit or filler. See "Install the serial port module" on page 347.
2. If you are instructed to return the component or optional device, follow all packaging instructions, and use any packaging materials for shipping that are supplied to you.

Demo video

Watch the procedure on YouTube

Install the serial port module

Follow the instructions in this section to install the serial port module.

About this task

Attention:

- Read “Installation Guidelines” on page 45 and “Safety inspection checklist” on page 46 to ensure that you work safely.
- Power off the server and peripheral devices and disconnect the power cords and all external cables. See “Power off the server” on page 61.
- Prevent exposure to static electricity, which might lead to system halt and loss of data, by keeping static-sensitive components in their static-protective packages until installation, and handling these devices with an electrostatic-discharge wrist strap or other grounding system.

Firmware and driver download: You might need to update the firmware or driver after replacing a component.

- Go to https://datacentersupport.lenovo.com/products/servers/thinksystem/sr860v4/7djn/downloads/driver-list to see the latest firmware and driver updates for your server.
- Go to “Update the firmware” on page 386 for more information on firmware updating tools.

Procedure

Step 1. If a serial port filler is installed, remove it.

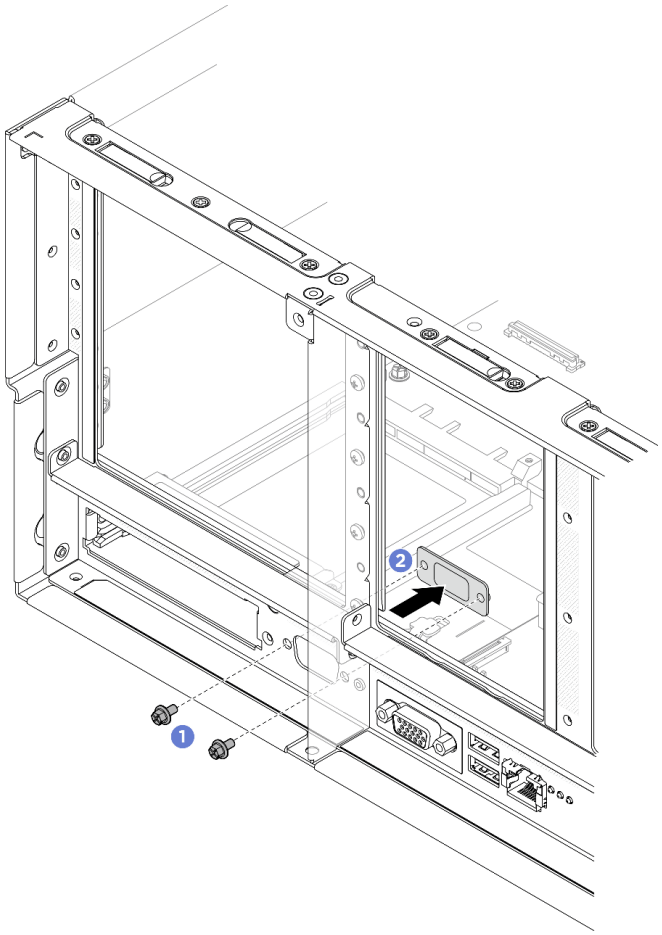

Figure 300. Removing serial port filler

a. 1 Remove the retention screws on the rear of the chassis.
b. 2 Push the serial port filler out of the serial port hole and remove it from the chassis.

Step 2. Install the serial port module.

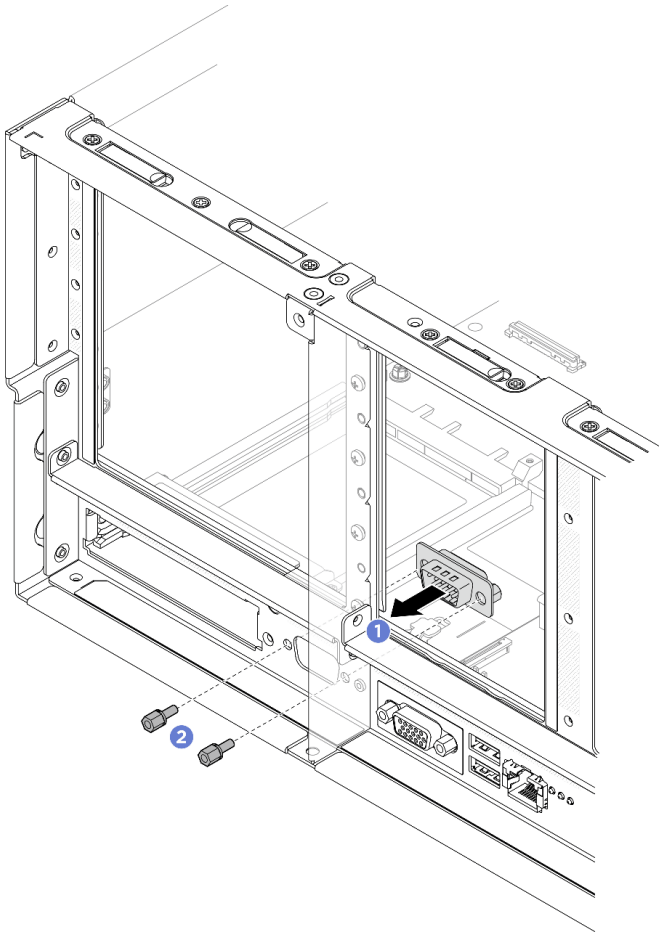

Figure 301. Installing serial port module

a. 1 Align and install the serial port module into the serial port hole from inside of the server chassis.

b. 2 Secure the serial port module with the retention screws.

Step 3. Connect the serial port module to the connector 1 on the system board assembly.

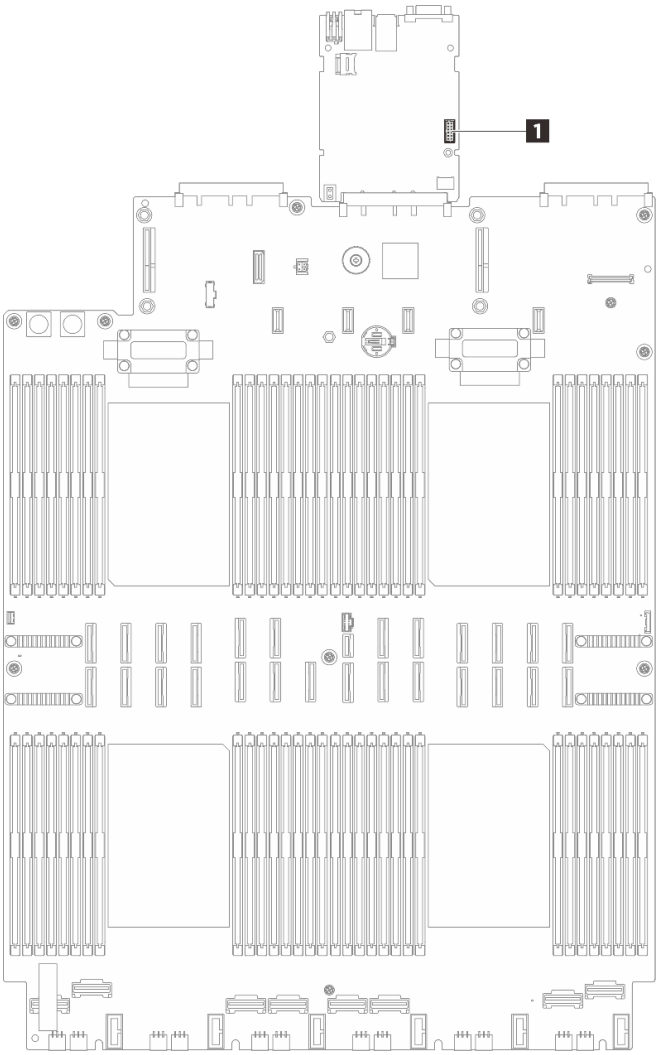

Figure 302. Connecting serial port module

After you finish

1. Reinstall the PCIe risers. See “Install the PCIe riser” on page 261.
2. Reinstall the crossbar. See “Install the crossbar” on page 128.
3. Reinstall the rear top cover. See “Install the rear top cover” on page 373.
4. Reinstall the front top cover. See “Install the front top cover” on page 375.
5. Complete the parts replacement. See “Complete the parts replacement” on page 382.
6. From the UEFI Setup page, click **System Settings → Devices and I/O Ports → Console Redirection Settings**. Change both **Console Redirection** and **SP Redirection** setting to **Enabled**.
7. To enable the serial port module on Linux or Microsoft Windows, do one of the followings according to the installed operating system:

   Note: If the Serial over LAN (SOL) or Emergency Management Services (EMS) feature is enabled, the serial port will be hidden on Linux and Microsoft Windows. Therefore, it is required to disable SOL and EMS to use the serial port on operating systems for serial devices.

   - For Linux:

Open the ipmitool and enter the following command to disable the Serial over LAN (SOL) feature:

```
-I lanplus -H IP -U USERID -P PASSWORD sol deactivate
```

- For Microsoft Windows:
  a. Open the ipmitool and enter the following command to disable the SOL feature:

     ```
     -I lanplus -H IP -U USERID -P PASSWORD sol deactivate
     ```

  b. Open Windows PowerShell and enter the following command to disable the Emergency Management Services (EMS) feature:

     ```
     Bcdedit /ems off
     ```

  c. Restart the server to ensure that the EMS setting takes effect.

Demo video

Watch the procedure on YouTube

System board assembly replacement (trained technician only)

Follow instructions in this section to remove and install the system board assembly.

Important:

- This task must be operated by trained technicians that are certified by Lenovo Service. Do not attempt to remove or install the part without proper training and qualification.
- When the server has a Processor Neptune® Core Module installed, you must apply for a shipping bracket FRU first if you need to install or remove the system board assembly or processor. However, when replacing the old Processor Neptune® Core Module with a new one, you do not need to apply for a shipping bracket FRU as the new module package contains it.

S017



CAUTION:
Hazardous moving fan blades nearby. Keep fingers and other body parts away.

CAUTION:



The heat sinks and processors might be very hot. Turn off the server and wait several minutes to let the server cool before removing the server cover.

The following illustration shows the layout of the system board assembly which contains the system I/O board (DC-SCM) and processor board.

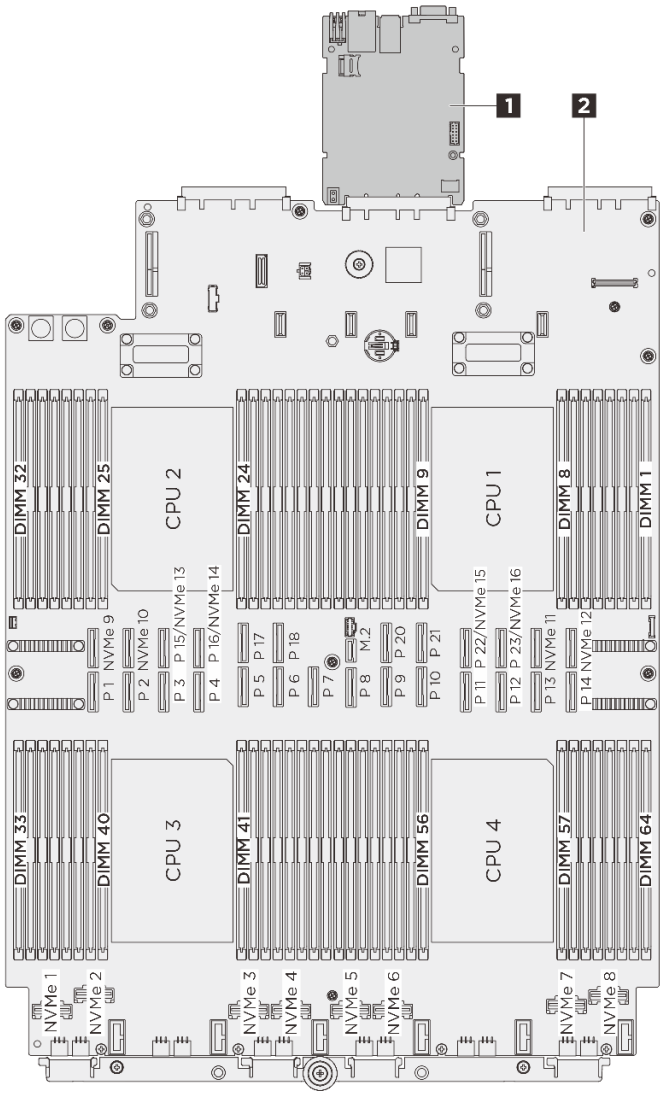

Figure 303. System-board-assembly layout

1 System I/O board (DC-SCM)	2 Processor board

System I/O board replacement (trained technicians only)

Use this section to remove and install the system I/O board, also known as Datacenter Secure Control Module (DC-SCM), from the system board assembly.

Important: This task must be operated by trained technicians that are certified by Lenovo Service. Do not attempt to remove or install the part without proper training and qualification.

Remove the system I/O board

Follow the instructions to remove the system I/O board, also known as Datacenter Secure Control Module (DC-SCM).

About this task

Important:

- This task must be operated by trained technicians that are certified by Lenovo Service. Do not attempt to remove or install the part without proper training and qualification.
- When removing the memory modules, label the slot number on each memory module, remove all the memory modules from the system board assembly, and set them aside on a static-protective surface for reinstallation.
- **When disconnecting cables, make a list of each cable and record the connectors the cable is connected to, and use the record as a cabling checklist after installing the new system board assembly.**

Attention:
- Read "Installation Guidelines" on page 45 and "Safety inspection checklist" on page 46 to ensure that you work safely.
- Power off the server and peripheral devices and disconnect the power cords and all external cables. See "Power off the server" on page 61.
- Prevent exposure to static electricity, which might lead to system halt and loss of data, by keeping static-sensitive components in their static-protective packages until installation, and handling these devices with an electrostatic-discharge wrist strap or other grounding system.

Procedure

Step 1. Make preparation for the task.

a. Record all system configuration information, such as Lenovo XClarity Controller IP addresses, vital product data, and the machine type, model number, serial number, Universally Unique Identifier, and asset tag of the server.

b. If applicable, export the Lenovo Features on Demand (FoD) activation key. See the "License Management" section in the XCC documentation compatible with the server at https://pubs.lenovo.com/lxcc-overview/.

c. Perform OneCLI commands or XCC actions to back up the UEFI and XCC settings. See https://pubs.lenovo.com/lxce-onecli/config_backup or https://pubs.lenovo.com/xcc3/nn1ia_c_backupthexcc.html.

d. Save the system event log to external media.

e. Power off the server and peripheral devices and disconnect the power cords and all external cables. See "Power off the server" on page 61.

f. If the server is installed in a rack, slide the server out on its rack slide rails to gain access to the top covers, or remove the server from the rack. See "Server replacement" on page 67.

g. Gently pull and disengage every installed power supply unit. See "Remove a power supply unit" on page 298

h. Remove the OCP modules if necessary. See "Remove an OCP module" on page 246.

i. Remove the front top cover. See "Remove the front top cover" on page 369.

j. Remove the rear top cover. See "Remove the rear top cover" on page 371.

k. Remove the crossbar. See "Remove the crossbar" on page 125.

l. Remove the PCIe risers. See "Remove the PCIe riser" on page 249.

m. Remove the front air baffle. See "Remove the front air baffle" on page 107.

n. Remove the rear air baffle. See "Remove the rear air baffle" on page 112.

o. Remove the fans and the fan cage. See "Remove a fan" on page 150 and "Remove the fan cage" on page 152.

p. Remove the intrusion switch. See "Remove the intrusion switch" on page 169.

q. Remove the power distribution board. See "Remove the power distribution board" on page 288.

r. Remove the PHMs. See “Remove a processor and heat sink” on page 306. If you need to remove the Processor Neptune® Core Module, see “Remove the Lenovo Processor Neptune Core Module” on page 182.

s. Make sure to label the slot number on each memory module, remove all the memory modules from the system board assembly, and set them aside on a static-protective surface for reinstallation. “Remove a memory module” on page 236.

Important: It is advised to print out the layout of memory module slots for reference.

t. Remove the MicroSD card, see “Remove the MicroSD card” on page 242.

u. Disconnect all the cables from the system board assembly. As you disconnect the cables, make a list of each cable and record the connectors the cables are connected to, and use the record as a cabling checklist after installing the new system board assembly.

Attention: To avoid damaging the system board assembly, make sure to follow the instructions in ***Internal Cable Routing Guide*** when disconnecting cables from the system board assembly.

Step 2. Remove the system board assembly.

Note: The lifting handle only serves the purpose of removing system board assembly. Do not attempt to lift the whole server with it.

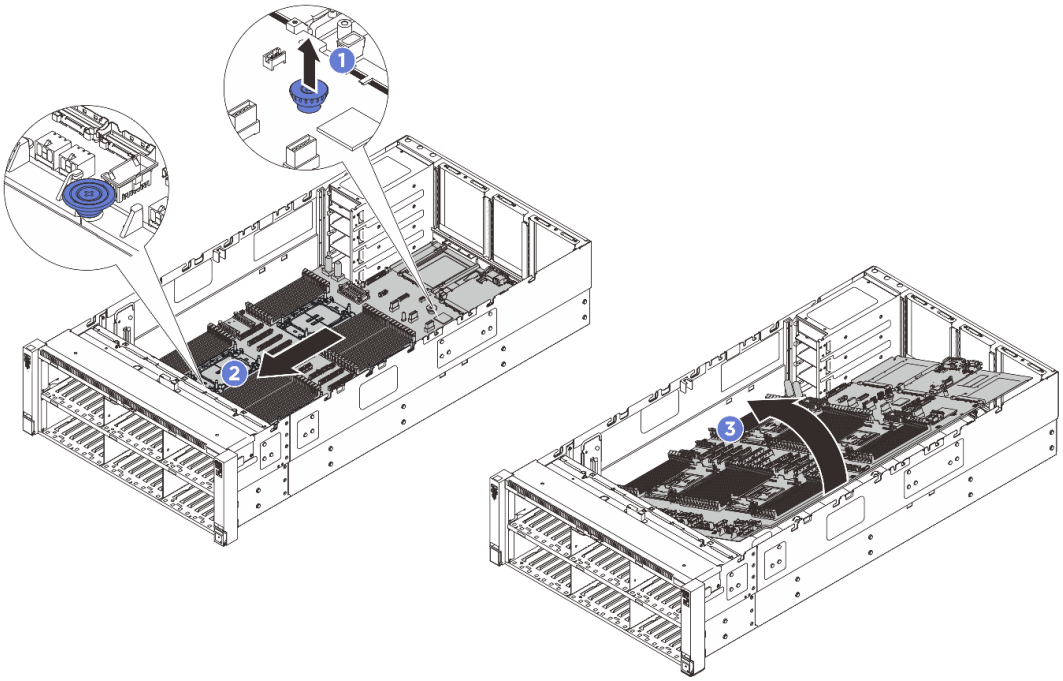

Figure 304. System board assembly removal

a. 1 Pull up the rear plunger to release the system board assembly.

b. 2 Grasp the front lifting handle and the rear plunger; then, slide the system board assembly toward the front of the chassis to disengage it from the chassis.

c. 3 Rotate the longer side of the system board assembly up; then, lift the system board assembly out of the chassis.

Step 3. Separate the system I/O board from the processor board.

Note: To prevent the contact of the I/O board from damage, pinch the handle on the I/O board and pull out the I/O board outward. During the entire pulling action, ensure that the I/O board remains as horizontal as possible.

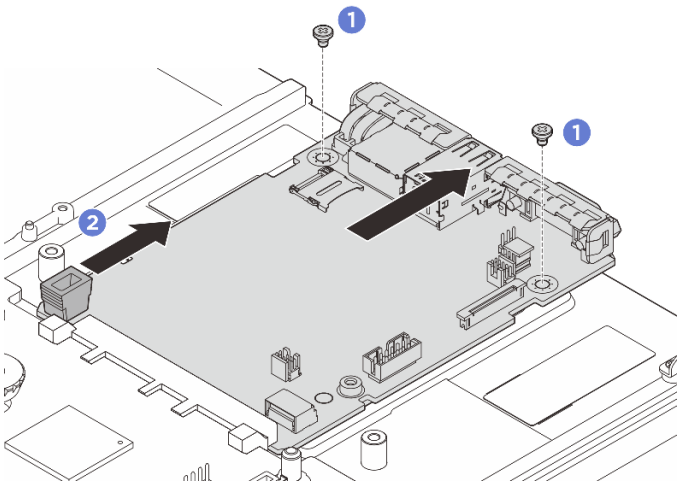

Figure 305. System I/O board removal

a. 1 Remove the screws that secure the system I/O board.

b. 2 Pinch the handle on the I/O board and pull the I/O board outward to disengage it from the processor board.

After you finish

If you are instructed to return the component or optional device, follow all packaging instructions, and use any packaging materials for shipping that are supplied to you.

Demo video

Watch the procedure on YouTube

Install the system I/O board

Follow the instructions in this section to install the system I/O board, also known as Datacenter Secure Control Module (DC-SCM).

About this task

Important: This task must be operated by trained technicians that are certified by Lenovo Service. Do not attempt to remove or install the part without proper training and qualification.

Attention:

- Read “Installation Guidelines” on page 45 and “Safety inspection checklist” on page 46 to ensure that you work safely.
- Power off the server and peripheral devices and disconnect the power cords and all external cables. See “Power off the server” on page 61.
- Prevent exposure to static electricity, which might lead to system halt and loss of data, by keeping static-sensitive components in their static-protective packages until installation, and handling these devices with an electrostatic-discharge wrist strap or other grounding system.

Firmware and driver download: You might need to update the firmware or driver after replacing a component.

- Go to https://datacentersupport.lenovo.com/products/servers/thinksystem/sr860v4/7djn/downloads/driver-list to see the latest firmware and driver updates for your server.
- Go to "Update the firmware" on page 386 for more information on firmware updating tools.

Procedure

Step 1. Install the system I/O board.

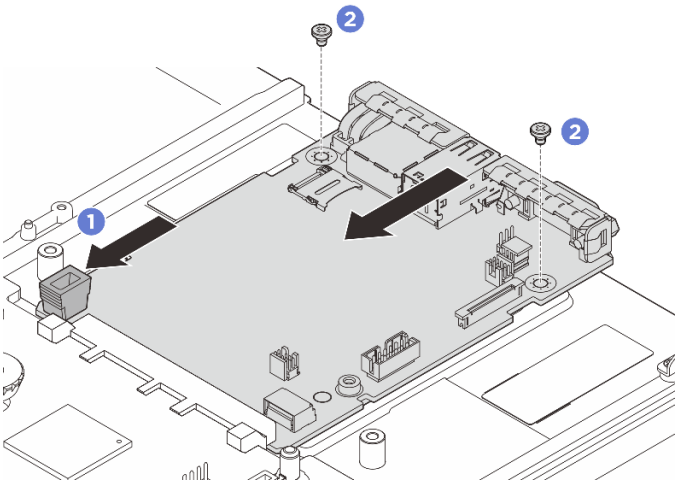

Figure 306. System I/O board installation

a. 1 Align the contacts on the system I/O board with the slots on the processor board, and use both hands to push the system I/O board and slightly insert it into the connector.

Note: To prevent the contacts of the system I/O board from damage, ensure that the system I/O board is aligned correctly with the connector on the processor board, and remains as horizontal as possible during the insertion.

b. 2 Install the screws to install the system I/O board to the supporting metal sheet.

Step 2. Install the system board assembly to the server.

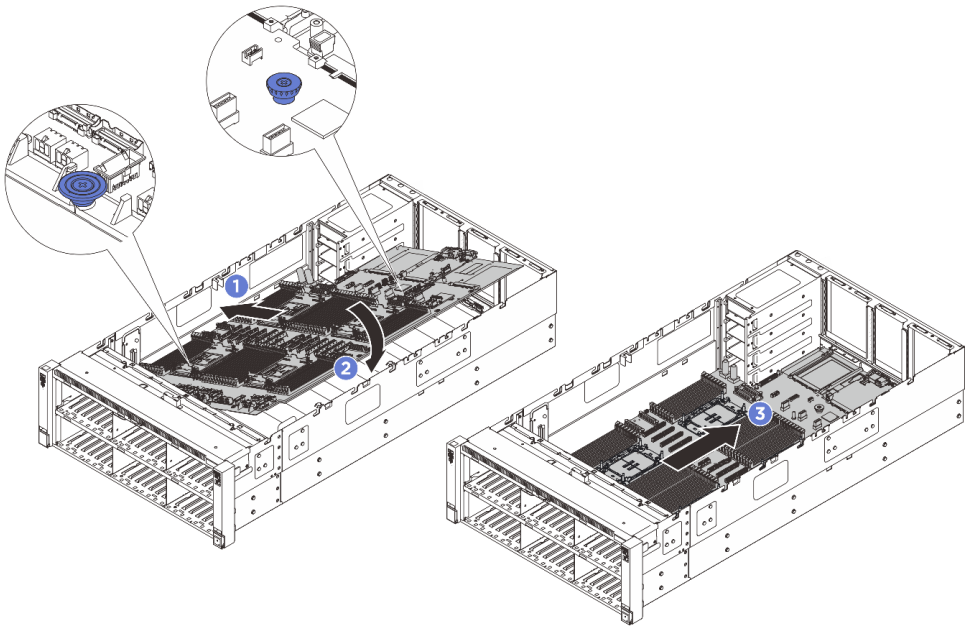

Figure 307. System board assembly installation

a. ❶ Hold the front lifting handle and the rear plunger on the system board assembly; then, insert the shorter side of the system board assembly into the chassis.

b. ❷ Lower the longer side of the system board assembly down into the chassis.

c. ❸ Slide the system board assembly toward the rear of the chassis until it clicks into place. Make sure that the rear connectors on the new system board assembly are inserted into the corresponding holes in the rear panel.

After you finish

1. Reinstall the MicroSD card, see “Install the MicroSD card” on page 244.
2. Reinstall the memory modules. See “Install a memory module” on page 238.
3. Reinstall the PHMs. See “Install a processor and heat sink” on page 311. If you need to reinstall the Processor Neptune® Core Module, see “Install the Lenovo Processor Neptune Core Module” on page 188.
4. Reinstall the power distribution board. See “Install the power distribution board” on page 292.
5. Reinstall the intrusion switch. See “Install the intrusion switch” on page 171.
6. Reinstall the rear air baffle. See “Install the rear air baffle” on page 115.
7. Reinstall the PCIe risers. See “Install the PCIe riser” on page 261.
8. Reinstall the crossbar. See “Install the crossbar” on page 128.
9. Reinstall the front air baffle. See “Install the front air baffle” on page 109.
10. Reinstall the fans and the fan cage assembly. See “Install a fan” on page 155 and “Install the fan cage” on page 154.
11. Reconnect all the cables to the system board assembly. See ***Internal Cable Routing Guide***.
12. Ensure that all components have been reassembled correctly and that no tools or loose screws are left inside the server.
13. Reinstall the rear top cover. See “Install the rear top cover” on page 373.
14. Reinstall the front top cover. See “Install the front top cover” on page 375.
15. Reinstall the power supply units. See “Install a power supply unit” on page 301.
16. Reinstall the OCP modules if necessary. See “Install an OCP module” on page 247.
17. If the sever was installed in a rack, reinstall the server into the rack. See “Server replacement” on page 67.

18. Reconnect the power cords and any cables that you removed.
19. Power on the server and any peripheral devices. See “Power on the server” on page 60.
20. (Lenovo service technicians only) Update the UEFI firmware. See https://glosse4lenovo.lenovo.com/wiki/glosse4lenovo/view/How%20To/System%20related/Procedure%20for%20replacing%20System%20IO%20board%20%28DC-SCM%29%20and%20updating%20system%20firmware%20on%20V4%20system./.
21. Update the XCC/LXPM/FPGA SCM/LXUM firmware. See “Update the firmware” on page 386.
22. Perform OneCLI commands or XCC actions to restore the UEFI and XCC settings. See https://pubs.lenovo.com/lxce-onecli/onecli_r_restore_command or https://pubs.lenovo.com/xcc3/nn1ia_c_restorethexcc.html.
23. Reinstall the FoD key.
24. Set the TPM policy. See “Enable TPM” on page 358.
25. If hiding TPM or updating TPM firmware is needed, see Hide/observe TPM or Update the TPM firmware
26. Optionally, enable Secure Boot. See “Enable UEFI Secure Boot” on page 361.

Demo video

Watch the procedure on YouTube

Enable TPM

The server supports Trusted Platform Module (TPM) of Version 2.0.

Note: For customers in the Chinese Mainland, integrated TPM is not supported. However, customers in the Chinese Mainland can install a TPM adapter (sometimes called a daughter card), only version 2.0 is available.

When a system I/O board is replaced, you must make sure that the TPM policy is set correctly.

CAUTION:
Take special care when setting the TPM policy. If it is not set correctly, the system I/O board can become unusable.

Set the TPM policy

By default, a replacement system I/O board is shipped with the TPM policy set to **Undefined**. You must modify this setting to match the setting that was in place for the system I/O board that is being replaced.

There are two methods available to set the TPM policy:

- From Lenovo XClarity Provisioning Manager

  To set the TPM policy from Lenovo XClarity Provisioning Manager:

  1. Start the server and press the key according to the on-screen instructions to display the Lenovo XClarity Provisioning Manager interface.
  2. If the power-on Administrator password is required, enter the password.
  3. Click  on the top right corner of the Lenovo XClarity Provisioning Manager interface, and then click **Update VPD**.
  4. Set the policy to one of the following settings.
     - **NationZ TPM 2.0 enabled - China only**. Customers in the Chinese Mainland should choose this setting if a NationZ TPM 2.0 adapter is installed.
     - **TPM enabled - ROW**. Customers outside of the Chinese Mainland should choose this setting.
     - **Permanently disabled**. Customers in the Chinese Mainland should use this setting if no TPM adapter is installed.

     Note: Although the setting **Undefined** is available as a policy setting, it should not be used.

- From Lenovo XClarity Essentials OneCLI

  Note: Please note that a Local IPMI user and password must be setup in Lenovo XClarity Controller for remote accessing to the target system.

  To set the TPM policy from Lenovo XClarity Essentials OneCLI:

  1. Read TpmTcmPolicyLock to check whether the TPM_TCM_POLICY has been locked:
     `OneCli.exe config show BMC.TpmTcmPolicyLock --override --bmc <userid>:<password>@<ip_address>`

     Note: The BMC.TpmTcmPolicyLock value must be 'Disabled', which means TPM_TCM_POLICY is NOT locked and changes to the TPM_TCM_POLICY are permitted. If the return code is 'Enabled', no changes to the policy are permitted. The planar may still be used if the desired setting is correct for the system being replaced.
  2. Configure the TPM_TCM_POLICY into XCC:
     - For customers in Chinese Mainland with no TPM, or customers that require to disable TPM:
       `OneCli.exe config set BMC.TpmTcmPolicy "NeitherTpmNorTcm" --override --bmc <userid>:<password>@<ip_address>`
     - For customers in Chinese Mainland that require to enable TPM:
       `OneCli.exe config set BMC.TpmTcmPolicy "NationZTPM20Only" --override --bmc <userid>:<password>@<ip_address>`
     - For customers outside Chinese Mainland that require to enable TPM:
       `OneCli.exe config set BMC.TpmTcmPolicy "TPMOnly" --override --bmc <userid>:<password>@<ip_address>`
  3. Issue the reset command to reset the system:
     `OneCli.exe misc ospower reboot --bmc <userid>:<password>@<ip_address>`
  4. Read back the value to check whether the change has been accepted:
     `OneCli.exe config show BMC.TpmTcmPolicy --override --bmc <userid>:<password>@<ip_address>`

     Notes:

     - If the read back value is matched, it means the TPM_TCM_POLICY has been set correctly.

       BMC.TpmTcmPolicy is defined as below:

       - Value 0 uses string "Undefined", which means UNDEFINED policy.
       - Value 1 uses string "NeitherTpmNorTcm", which means TPM_PERM_DISABLED.
       - Value 2 uses string "TPMOnly", which means TPM_ALLOWED.
       - Value 5 uses string "NationZTPM20Only", which means NationZ_TPM20_ALLOWED.
     - Below 4 steps must also be used to 'lock' the TPM_TCM_POLICY when using OneCli/ASU commands:
  5. Read TpmTcmPolicyLock to check whether the TPM_TCM_POLICY has been locked:
     `OneCli.exe config show BMC.TpmTcmPolicyLock --override --bmc <userid>:<password>@<ip_address>`

     The value must be 'Disabled', which means TPM_TCM_POLICY is NOT locked and must be set.
  6. Lock the TPM_TCM_POLICY:
     `OneCli.exe config set BMC.TpmTcmPolicyLock "Enabled" --override --bmc <userid>:<password>@<ip_address>`
  7. Issue the reset command to reset the system:
     `OneCli.exe misc ospower reboot --bmc <userid>:<password>@<ip_address>`

     During the reset, UEFI will read the value from BMC.TpmTcmPolicyLock. If the value is 'Enabled' and the BMC.TpmTcmPolicy value is valid, UEFI will lock the TPM_TCM_POLICY setting.

     Note: The valid values for BMC.TpmTcmPolicy include 'NeitherTpmNorTcm', 'TPMOnly', and 'NationZTPM20Only'.

If the BMC.TpmTcmPolicyLock is set as 'Enabled' but BMC.TpmTcmPolicy value is invalid, UEFI will reject the 'lock' request and change BMC.TpmTcmPolicyLock back to 'Disabled'.

8. Read back the value to check whether the 'Lock' is enabled successfully:
   `OneCli.exe config show BMC.TpmTcmPolicyLock --override --bmc <userid>:<password>@<ip_address>`

   Note: If the read back value is changed from 'Disabled' to 'Enabled', that means the TPM_TCM_POLICY has been locked successfully. There is no method to unlock a policy once it has been set other than replacing the system I/O board.

   BMC.TpmTcmPolicyLock is defined as below:

   Value 1 uses string "Enabled", which means lock the policy. Other values are not accepted.

Hide/observe TPM

TPM is enabled by default to encrypt data transfer for system operation. Optionally, you can disable TPM using Unified Extensible Firmware Interface (UEFI) or Lenovo XClarity Essentials OneCLI.

Using UEFI

For details, see “TPM Device” in *UEFI User Guide* at https://pubs.lenovo.com/uefi-overview/.

Using Lenovo XClarity Essentials OneCLI

To disable TPM, do the following:

1. Download and install Lenovo XClarity Essentials OneCLI.

   To download Lenovo XClarity Essentials OneCLI, go to the following site:

   https://datacentersupport.lenovo.com/solutions/HT116433

2. Run the following command:

   `OneCli.exe config set UEFI.TrustedComputingGroup_TPMDevice "Disabled" -b <userid>:<password>@<ip_address>`

   where:

   - *<userid>:<password>* are the credentials used to access the BMC (Lenovo XClarity Controller interface) of your server. The default user ID is USERID, and the default password is PASSW0RD (zero, not an uppercase o)
   - *<ip_address>* is the IP address of the BMC.

   Example:

```
D:\onecli>OneCli.exe config set UEFI.TrustedComputingGroup_TPMDevice "Disabled" --bmc USERID:PASSW0RD@10.245.38.64
[1s]Certificate check finished [100%][=======================================================================>]
Start to connect BMC at 10.245.38.64 to apply config set
Invoking SET command ...
UEFI.TrustedComputingGroup_TPMDevice=Disabled
Changes completed successfully, but these changes will not take effect until next reboot.
Succeed.
```

3. Reboot the system.

If you want to enable TPM again, run the following command and reboot the system:
`OneCli.exe config set UEFI.TrustedComputingGroup_TPMDevice "Enabled" -b <userid>:<password>@<ip_address>`

Example:

```
D:\onecli>OneCli.exe config set UEFI.TrustedComputingGroup_TPMDevice "Enabled" --bmc USERID:PASSWORD@10.245.38.64
[1s]Certificate check finished [100%][=======================================================================================>]
Start to connect BMC at 10.245.38.64 to apply config set
Invoking SET command ...
UEFI.TrustedComputingGroup_TPMDevice=Enabled
Changes completed successfully, but these changes will not take effect until next reboot.
Succeed.
```

Update the TPM firmware

Optionally, you can update the TPM firmware using Lenovo XClarity Essentials OneCLI.

Note: TPM firmware update is irreversible. After update, the TPM firmware cannot be downgraded to earlier versions.

TPM firmware version

Follow the procedure below to see the TPM firmware version:

From Lenovo XClarity Provisioning Manager

1. Start the server and press the key specified in the on-screen instructions to display the Lenovo XClarity Provisioning Manager interface. (For more information, see the “Startup” section in the LXPM documentation compatible with your server at https://pubs.lenovo.com/lxpm-overview/.)
2. If the power-on Administrator password is required, enter the password.
3. From the UEFI Setup page, click **System Settings → Security → Trusted Platform Module → TPM 2.0 → TPM Firmware Version**.

Update the TPM firmware

To update the TPM firmware, do the following:

1. Download and install Lenovo XClarity Essentials OneCLI.

   To download Lenovo XClarity Essentials OneCLI, go to the following site:

   https://datacentersupport.lenovo.com/solutions/HT116433

2. Run the following command:
   `OneCli.exe config set UEFI.TrustedComputingGroup_DeviceOperation UpdatetoTPM2_0firmwareversion<x_x_x_x> --bmc <userid>:<password>@<ip_address>`

   where:

   - *<x_x_x_x>* is the target TPM version.

     e.g. TPM 2.0 (7.2.1.0) -> TPM 2.0 (7.2.2.0):

     `OneCli.exe config set UEFI.TrustedComputingGroup_DeviceOperation UpdatetoTPM2_0firmwareversion7_2_2_0 --bmc <userid>:<password>@<ip_address>`

   - *<userid>:<password>* are the credentials used to access the BMC (Lenovo XClarity Controller interface) of your server. The default user ID is USERID, and the default password is PASSW0RD (zero, not an uppercase o).
   - *<ip_address>* is the IP address of the BMC.

Enable UEFI Secure Boot

Optionally, you can enable UEFI Secure Boot.

There are two methods available to enable UEFI Secure Boot:

- From Lenovo XClarity Provisioning Manager

  To enable UEFI Secure Boot from Lenovo XClarity Provisioning Manager:

1. Start the server and press the key specified in the on-screen instructions to display the Lenovo XClarity Provisioning Manager interface. (For more information, see the “Startup” section in the LXPM documentation compatible with your server at https://pubs.lenovo.com/lxpm-overview/.)
2. If the power-on Administrator password is required, enter the password.
3. From the UEFI Setup page, click **System Settings → Security → Secure Boot Configuration → Secure Boot Setting**.
4. Enable Secure Boot and save the settings.

Note: If disabling UEFI secure boot is needed, select Disable in step 4.

- From Lenovo XClarity Essentials OneCLI

  To enable UEFI Secure Boot from Lenovo XClarity Essentials OneCLI:

  1. Download and install Lenovo XClarity Essentials OneCLI.

     To download Lenovo XClarity Essentials OneCLI, go to the following site:

     https://datacentersupport.lenovo.com/solutions/HT116433

  2. Run the following command to enable Secure Boot:
     `OneCli.exe config set UEFI.SecureBootConfiguration_SecureBootSetting Enabled --bmc <userid>:<password>@<ip_address>`

     where:

     – *<userid>:<password>* are the credentials used to access the BMC (Lenovo XClarity Controller interface) of your server. The default user ID is USERID, and the default password is PASSW0RD (zero, not an uppercase o)

     – *<ip_address>* is the IP address of the BMC.

     For more information about the Lenovo XClarity Essentials OneCLI `set` command, see:

     https://pubs.lenovo.com/lxce-onecli/onecli_r_set_command

  Note: If disabling UEFI secure boot is needed, run the following command:
  `OneCli.exe config set UEFI.SecureBootConfiguration_SecureBootSetting Disabled --bmc <userid>:<password>@<ip_address>`

Processor board replacement (trained technicians only)

Use this section to remove and install the processor board from the system board assembly.

Important: This task must be operated by trained technicians that are certified by Lenovo Service. Do not attempt to remove or install the part without proper training and qualification.

Remove the processor board

Follow instructions in this section to remove the processor board.

About this task

A processor board provides different connectors or slots to connect different components or peripherals of the system for communication. The board and the supporting metal sheet constitute a base for the system board assembly. If the processor board fails, it must be replaced.

Important:

- This task must be operated by trained technicians that are certified by Lenovo Service. Do not attempt to remove or install the part without proper training and qualification.

- When removing the memory modules, label the slot number on each memory module, remove all the memory modules from the system board assembly, and set them aside on a static-protective surface for reinstallation.
- **When disconnecting cables, make a list of each cable and record the connectors the cable is connected to, and use the record as a cabling checklist after installing the new system board assembly.**

Attention:
- Read “Installation Guidelines” on page 45 and “Safety inspection checklist” on page 46 to ensure that you work safely.
- Power off the server and peripheral devices and disconnect the power cords and all external cables. See “Power off the server” on page 61.
- Prevent exposure to static electricity, which might lead to system halt and loss of data, by keeping static-sensitive components in their static-protective packages until installation, and handling these devices with an electrostatic-discharge wrist strap or other grounding system.

Procedure

Step 1. Make preparation for this task.

a. Record all system configuration information, such as Lenovo XClarity Controller IP addresses, vital product data, and the machine type, model number, serial number, Universally Unique Identifier, and asset tag of the server.

b. Save the system configuration to an external device with Lenovo XClarity Essentials.

c. Save the system event log to external media.

d. Power off the server and peripheral devices and disconnect the power cords and all external cables. See “Power off the server” on page 61.

e. If the server is installed in a rack, slide the server out on its rack slide rails to gain access to the top covers, or remove the server from the rack. See “Server replacement” on page 67.

f. Gently pull and disengage every installed power supply unit. See “Remove a power supply unit” on page 298

g. Remove the OCP modules if necessary. See “Remove an OCP module” on page 246.

h. Remove the front top cover. See “Remove the front top cover” on page 369.

i. Remove the rear top cover. See “Remove the rear top cover” on page 371.

j. Remove the front air baffle. See “Remove the front air baffle” on page 107 .

k. Remove the fans and the fan cage. See “Remove a fan” on page 150 and “Remove the fan cage” on page 152.

l. Remove the crossbar. See “Remove the crossbar” on page 125.

m. Remove all PCIe risers. See “Remove the PCIe riser” on page 249.

n. Remove the rear air baffle. See “Remove the rear air baffle” on page 112.

o. Remove the intrusion switch. See “Remove the intrusion switch” on page 169.

p. Remove the power distribution board. See “Remove the power distribution board” on page 288.

q. Remove the PHMs. See “Remove a processor and heat sink” on page 306. If you need to remove the Processor Neptune® Core Module, see “Remove the Lenovo Processor Neptune Core Module” on page 182.

r. Make sure to label the slot number on each memory module, remove all the memory modules from the system board assembly, and set them aside on a static-protective surface for reinstallation. See “Remove a memory module” on page 236.

Important: It is advised to print out the layout of memory module slots for reference.

s. Remove the USB I/O board. See "Remove the USB I/O board" on page 378.

t. Disconnect all the cables from the system board assembly. As you disconnect the cables, make a list of each cable and record the connectors the cables are connected to, and use the record as a cabling checklist after installing the new system board assembly.

Attention: To avoid damaging the system board assembly, make sure to follow the instructions in ***Internal Cable Routing Guide*** when disconnecting cables from the system board assembly.

Step 2. Remove the system board assembly.

Note: The lifting handle only serves the purpose of removing system board assembly. Do not attempt to lift the whole server with it.

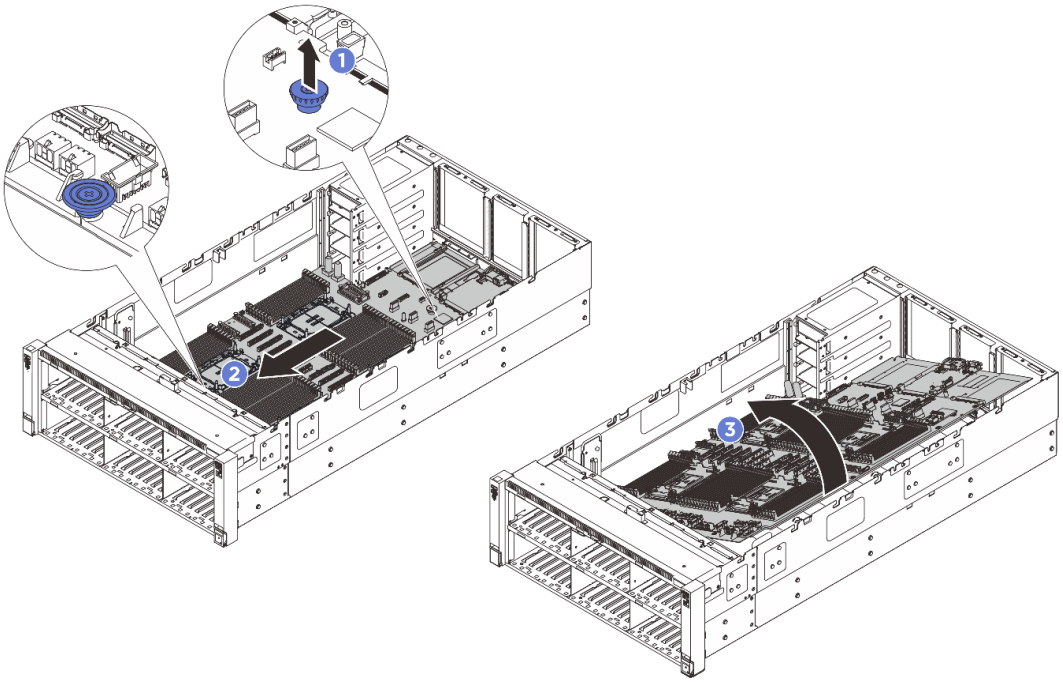

Figure 308. System board assembly removal

a. 1 Pull up the rear plunger to release the system board assembly.

b. 2 Grasp the front lifting handle and the rear plunger; then, slide the system board assembly toward the front of the chassis to disengage it from the chassis.

c. 3 Rotate the longer side of the system board assembly up; then, lift the system board assembly out of the chassis.

Step 3. Separate the system I/O board from the processor board.

Note: To prevent the contact of the I/O board from damage, pinch the handle on the I/O board and pull out the I/O board outward. During the entire pulling action, ensure that the I/O board remains as horizontal as possible.

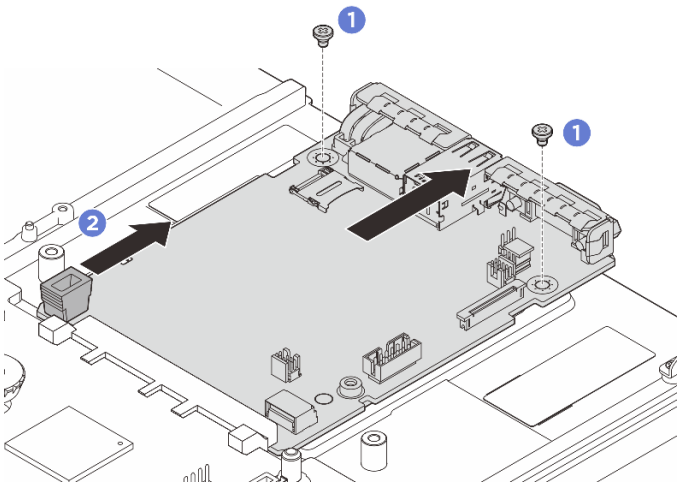

Figure 309. System I/O board removal

a. ❶ Remove the screws that secure the system I/O board.

b. ❷ Pinch the handle on the I/O board and pull the I/O board outward to disengage it from the processor board.

After you finish

1. If you are instructed to return the component or optional device, follow all packaging instructions, and use any packaging materials for shipping that are supplied to you.

   Important: Before you return the processor board, make sure that you install the processor socket covers from the new processor board. To replace a processor socket cover:

   a. Take a socket cover from the processor socket assembly on the new processor board and orient it correctly above the processor socket assembly on the removed processor board.

   b. Gently press down the socket cover legs to the processor socket assembly, pressing on the edges to avoid damage to the socket pins. You might hear a click on the socket cover when it is securely attached.

   c. **Make sure** that the socket cover is securely attached to the processor socket assembly.

2. If you plan to recycle the component, see "Disassemble the system board assembly for recycle" on page 437.

Demo video

Watch the procedure on YouTube

Install the processor board

Follow the instructions in this section to install the processor board.

About this task

A processor board provides different connectors or slots to connect different components or peripherals of the system for communication. The board and the supporting metal sheet constitute a base for the system board assembly. If the processor board fails, it must be replaced.

Important: Removing and installing this component requires trained technicians. **Do not** attempt to remove or install it without proper training.

Attention:
- Read “Installation Guidelines” on page 45 and “Safety inspection checklist” on page 46 to ensure that you work safely.
- Power off the server and peripheral devices and disconnect the power cords and all external cables. See “Power off the server” on page 61.
- Prevent exposure to static electricity, which might lead to system halt and loss of data, by keeping static-sensitive components in their static-protective packages until installation, and handling these devices with an electrostatic-discharge wrist strap or other grounding system.

Firmware and driver download: You might need to update the firmware or driver after replacing a component.

- Go to https://datacentersupport.lenovo.com/products/servers/thinksystem/sr860v4/7djn/downloads/driver-list to see the latest firmware and driver updates for your server.
- Go to “Update the firmware” on page 386 for more information on firmware updating tools.

Procedure

Step 1. Install the system I/O board.

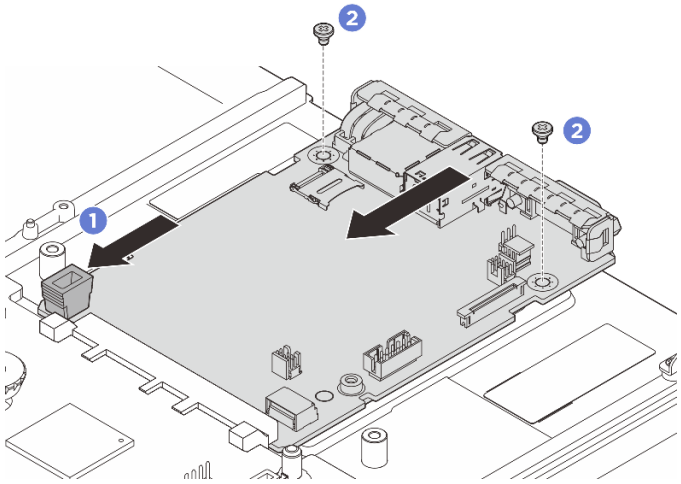

Figure 310. System I/O board installation

a. 1 Align the contacts on the system I/O board with the slots on the processor board, and use both hands to push the system I/O board and slightly insert it into the connector.

Note: To prevent the contacts of the system I/O board from damage, ensure that the system I/O board is aligned correctly with the connector on the processor board, and remains as horizontal as possible during the insertion.

b. 2 Install the screws to install the system I/O board to the supporting metal sheet.

Step 2. Install the system board assembly to the server.

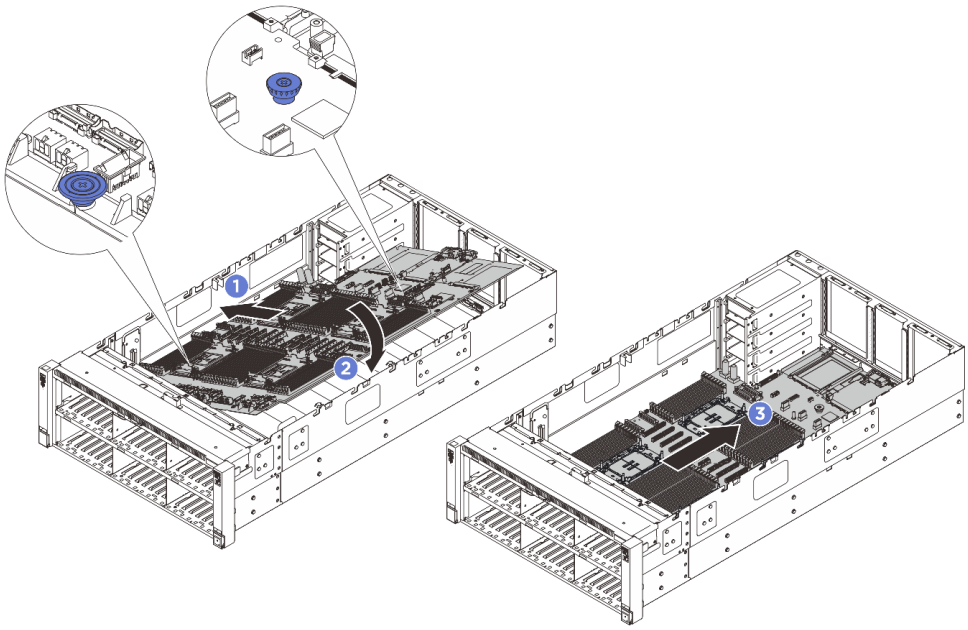

Figure 311. System board assembly installation

a. ❶ Hold the front lifting handle and the rear plunger on the system board assembly; then, insert the shorter side of the system board assembly into the chassis.

b. ❷ Lower the longer side of the system board assembly down into the chassis.

c. ❸ Slide the system board assembly toward the rear of the chassis until it clicks into place. Make sure that the rear connectors on the new system board assembly are inserted into the corresponding holes in the rear panel.

After you finish

1. Reinstall the USB I/O board. See “Install the USB I/O board” on page 380.
2. Reinstall the memory modules. See “Install a memory module” on page 238.
3. Reinstall the PHMs. See “Install a processor and heat sink” on page 311. If you need to reinstall the Processor Neptune® Core Module, see “Install the Lenovo Processor Neptune Core Module” on page 188.
4. Reinstall the power distribution board. See “Install the power distribution board” on page 292.
5. Reinstall the intrusion switch. See “Install the intrusion switch” on page 171.
6. Reinstall the rear air baffle. See “Install the rear air baffle” on page 115.
7. Reinstall the PCIe risers. See “Install the PCIe riser” on page 261.
8. Reinstall the crossbar. See “Install the crossbar” on page 128.
9. Reinstall the front air baffle. See “Install the front air baffle” on page 109.
10. Reinstall the fans and the fan cage assembly. See “Install a fan” on page 155 and “Install the fan cage” on page 154.
11. Reconnect all the cables to the system board assembly. See ***Internal Cable Routing Guide***.
12. Ensure that all components have been reassembled correctly and that no tools or loose screws are left inside the server.
13. Reinstall the rear top cover. See “Install the rear top cover” on page 373.
14. Reinstall the front top cover. See “Install the front top cover” on page 375.
15. Reinstall the OCP modules if necessary. See “Install an OCP module” on page 247.
16. Reinstall the power supply units. See “Install a power supply unit” on page 301.
17. If the sever was installed in a rack, reinstall the server into the rack. See “Server replacement” on page 67.
18. Reconnect the power cords and any cables that you removed.

19. Power on the server and any peripheral devices. See “Power on the server” on page 60.
20. Update the HPM FPGA firmware. See “Update the firmware” on page 386
21. Update the Vital Product Data (VPD) of the system board assembly. See “Update the Vital Product Data (VPD)” on page 368. Machine type number and serial number can be found on the ID label, see “Identify the server and access the Lenovo XClarity Controller” on page 41.

Demo video

Watch the procedure on YouTube

Update the Vital Product Data (VPD)

Use this topic to update the Vital Product Data (VPD).

- **(Required)** Machine type
- **(Required)** Serial number
- **(Required)** System model
- (Optional) Asset tag
- (Optional) UUID

Recommended tools:

- Lenovo XClarity Provisioning Manager
- Lenovo XClarity Essentials OneCLI commands

Using Lenovo XClarity Provisioning Manager

Steps:

1. Start the server and press the key according to the on-screen instructions. The Lenovo XClarity Provisioning Manager interface is displayed by default.
2. Click ⚙ on the top right corner of the Lenovo XClarity Provisioning Manager main interface.
3. Click **Update VPD**; then, follow on-screen instructions to update the VPD.

Using Lenovo XClarity Essentials OneCLI commands

- Updating **machine type**
  `onecli config set VPD.SysInfoProdName1O <m/t_model> [access_method]`
- Updating **serial number**
  `onecli config set VPD.SysInfoSerialNum1O <s/n> [access_method]`
- Updating **system model**

  `onecli config set VPD.SysInfoProdIdentifier <system model> [access_method]`
- Updating **asset tag**
  `onecli config set VPD.SysEncloseAssetTag <asset_tag> [access_method]`
- Updating **UUID**
  `onecli config createuuid VPD.SysInfoUUID [access_method]`

Variable	Description
<m/t_model>	The server machine type and model number. Type `xxxxyyyyyy`, where `xxxx` is the machine type and `yyyyyy` is the server model number.

<s/n>	The serial number on the server. Type `zzzzzzzz` (length 8-10 characters), where `zzzzzzzz` is the serial number.
<system model>	The system model on the server. Type `system yyyyyyyy`, where *yyyyyyyy* is the product identifier.
<asset_tag>	The server asset tag number. Type `aaaaaaaaaaaaaaaaaaaaaaaaaaaaaaaa`, where `aaaaaaaaaaaaaaaaaaaaaaaaaaaaaaaa` is the asset tag number.
[access_method]	The access method that you select to access the target server. • Online KCS (unauthenticated and user restricted): You can directly delete *[access_method]* from the command. • Online authenticated LAN: In this case, specify below LAN account information at the end of the OneCLI command: `--bmc-username` *<user_id>* `--bmc-password` *<password>* • Remote WAN/LAN: In this case, specify below XCC account information and IP address at the end of the OneCLI command: `--bmc` *<bmc_user_id>*:*<bmc_password>*`@`*<bmc_external_IP>* **Notes:** – *<bmc_user_id>* The BMC account name (1 of 12 accounts). The default value is USERID. – *<bmc_password>* The BMC account password (1 of 12 accounts).

Top cover replacement

Follow instructions in this section to remove and install the top cover.

Remove the front top cover

Follow instructions in this section to remove the front top cover.

About this task

S014



CAUTION:
Hazardous voltage, current, and energy levels might be present. Only a qualified service technician is authorized to remove the covers where the label is attached.

S033



CAUTION:
Hazardous energy present. Voltages with hazardous energy might cause heating when shorted with metal, which might result in spattered metal, burns, or both.

Attention:

- Read "Installation Guidelines" on page 45 and "Safety inspection checklist" on page 46 to ensure that you work safely.
- Power off the server and peripheral devices and disconnect the power cords and all external cables. See "Power off the server" on page 61.

Procedure

Step 1. If the server is installed in a rack, slide the server out on its rack slide rails to gain access to the top covers, or remove the server from the rack. See "Server replacement" on page 67.

Step 2. If the front top cover is locked, unlock it with a screwdriver (direction 2).

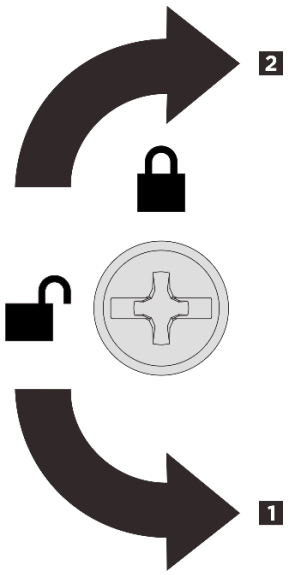

1 Unlocking direction
2 Locking direction

Figure 312. Front top cover locking/unlocking direction

Step 3. Remove the front top cover.

Attention: For proper cooling and air flow, install the front and rear top covers before powering on the server. Operating the server with the top covers removed might damage server components.

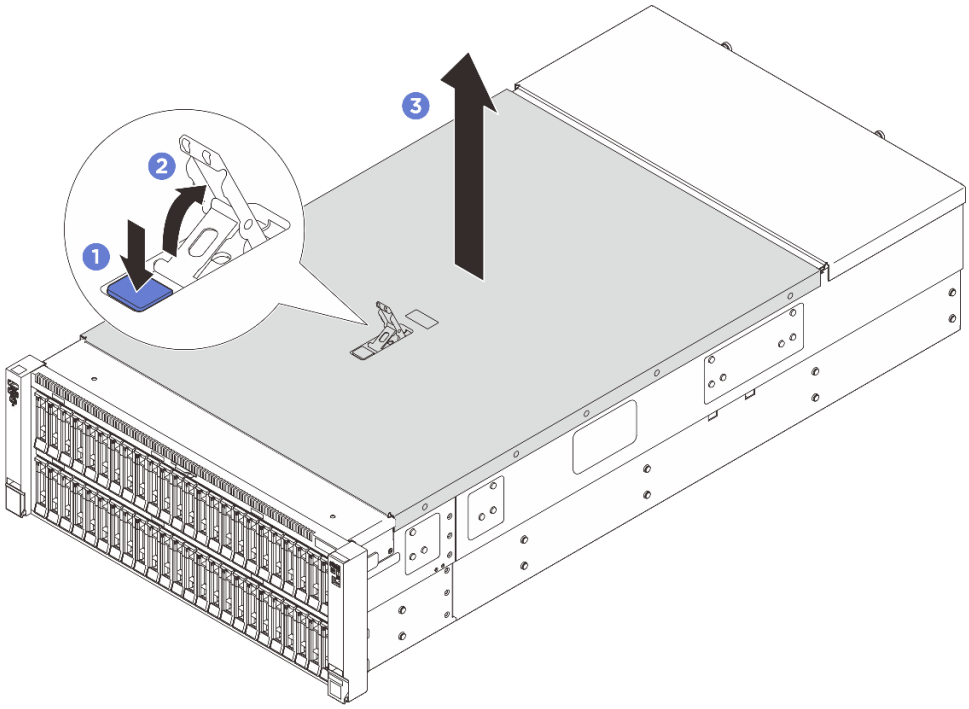

Figure 313. Front top cover removal

a. 1 Press the blue button on the front top cover release latch.
b. 2 Rotate the end of the latch up until it is in vertical position.
c. 3 Lift the front top cover to remove it.

After you finish

If you are instructed to return the component or optional device, follow all packaging instructions, and use any packaging materials for shipping that are supplied to you.

Demo video

Watch the procedure on YouTube

Remove the rear top cover

Follow instructions in this section to remove the rear top cover.

About this task

S014



CAUTION:
Hazardous voltage, current, and energy levels might be present. Only a qualified service technician is authorized to remove the covers where the label is attached.

S033



CAUTION:
Hazardous energy present. Voltages with hazardous energy might cause heating when shorted with metal, which might result in spattered metal, burns, or both.

Attention:

- Read "Installation Guidelines" on page 45 and "Safety inspection checklist" on page 46 to ensure that you work safely.
- Power off the server and peripheral devices and disconnect the power cords and all external cables. See "Power off the server" on page 61.

Procedure

Step 1. If the server is installed in a rack, slide the server out on its rack slide rails to gain access to the top covers, or remove the server from the rack. See "Server replacement" on page 67.

Step 2. Remove the front top cover. See "Remove the front top cover" on page 369.

Step 3. Remove the rear top cover.

Attention: For proper cooling and air flow, install the front and rear top covers before powering on the server. Operating the server with the top covers removed might damage server components.

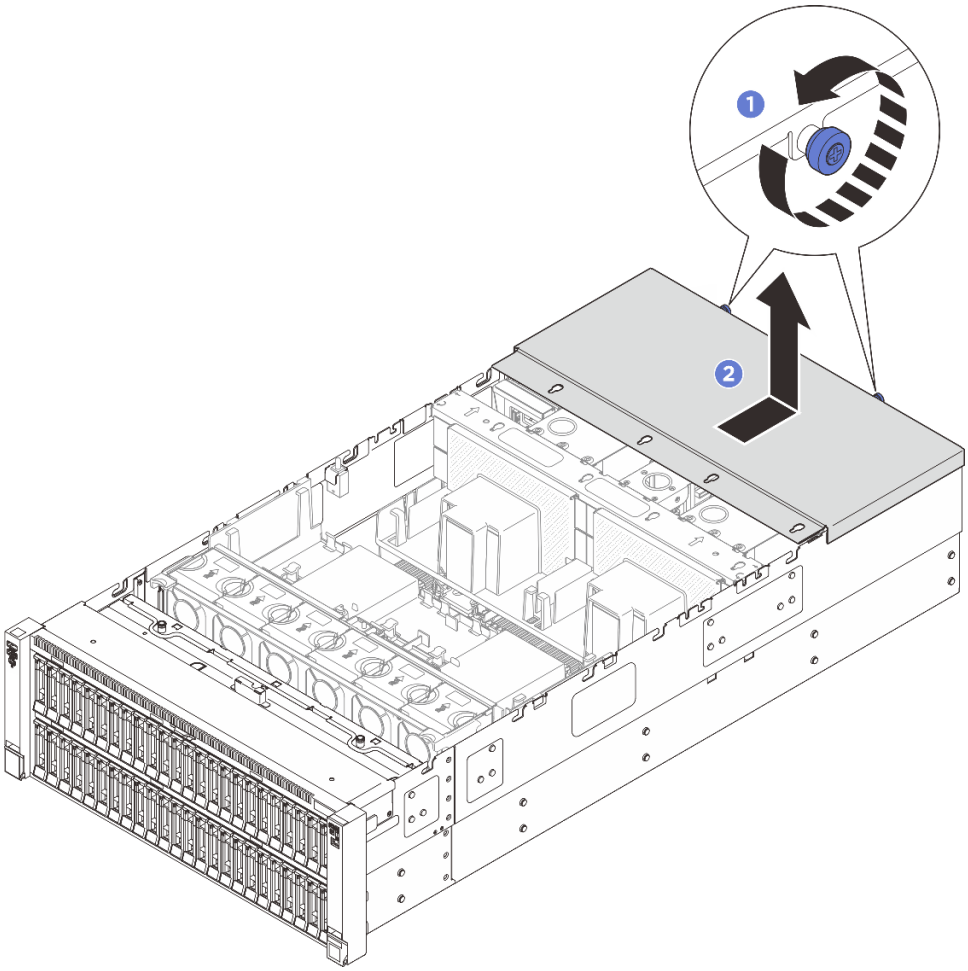

Figure 314. Rear top cover removal

a. 1 Loosen the two thumbscrews on the rear of the server.
b. 2 Slide the rear top cover towards the rear of the server and lift to remove it.

After you finish

If you are instructed to return the component or optional device, follow all packaging instructions, and use any packaging materials for shipping that are supplied to you.

Demo video

Watch the procedure on YouTube

Install the rear top cover

Follow instructions in this section to install the rear top cover.

S014



CAUTION:
Hazardous voltage, current, and energy levels might be present. Only a qualified service technician is authorized to remove the covers where the label is attached.

S033



CAUTION:
Hazardous energy present. Voltages with hazardous energy might cause heating when shorted with metal, which might result in spattered metal, burns, or both.

About this task

Attention:

- Read "Installation Guidelines" on page 45 and "Safety inspection checklist" on page 46 to ensure that you work safely.
- Make sure that all cables, adapters, and other components are installed and seated correctly and that you have not left loose tools or parts inside the server.
- Make sure that all internal cables are correctly routed. See ***Internal Cable Routing Guide***.

Procedure

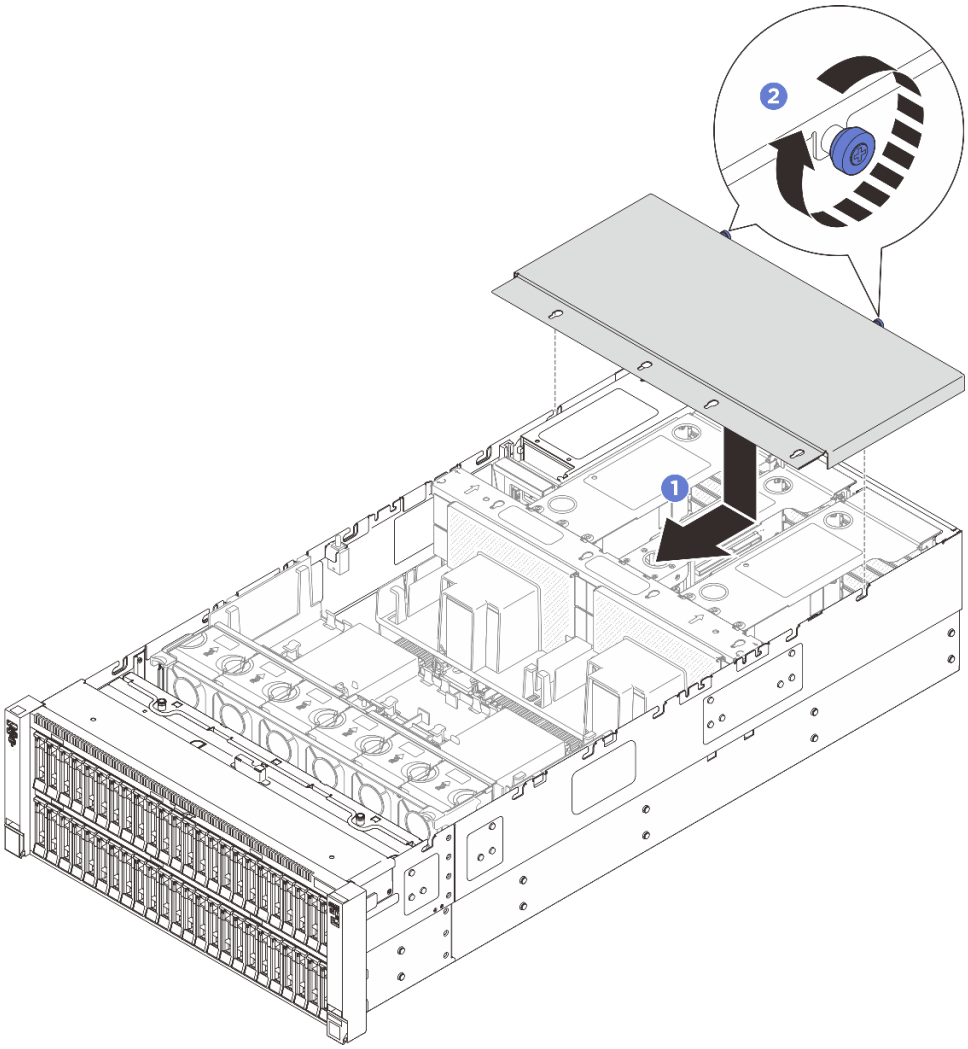

Figure 315. Rear top cover installation

Step 1. Align the rear top cover guide pins with the guide holes on the chassis; then place the rear top cover on top of the server and slide it towards the front of the server until it engages with the chassis.

Step 2. Secure the two thumbscrews on the rear of the server.

After you finish

1. Reinstall the front top cover. See “Install the front top cover” on page 375
2. Complete the parts replacement. See “Complete the parts replacement” on page 382.

Demo video

Watch the procedure on YouTube

Install the front top cover

Follow instructions in this section to install the front top cover.

About this task

S014



CAUTION:
Hazardous voltage, current, and energy levels might be present. Only a qualified service technician is authorized to remove the covers where the label is attached.

S033



CAUTION:
Hazardous energy present. Voltages with hazardous energy might cause heating when shorted with metal, which might result in spattered metal, burns, or both.

Attention:

- Read "Installation Guidelines" on page 45 and "Safety inspection checklist" on page 46 to ensure that you work safely.
- Make sure that all cables, adapters, and other components are installed and seated correctly and that you have not left loose tools or parts inside the server.
- Make sure that all internal cables are correctly routed. See ***Internal Cable Routing Guide***.

Procedure

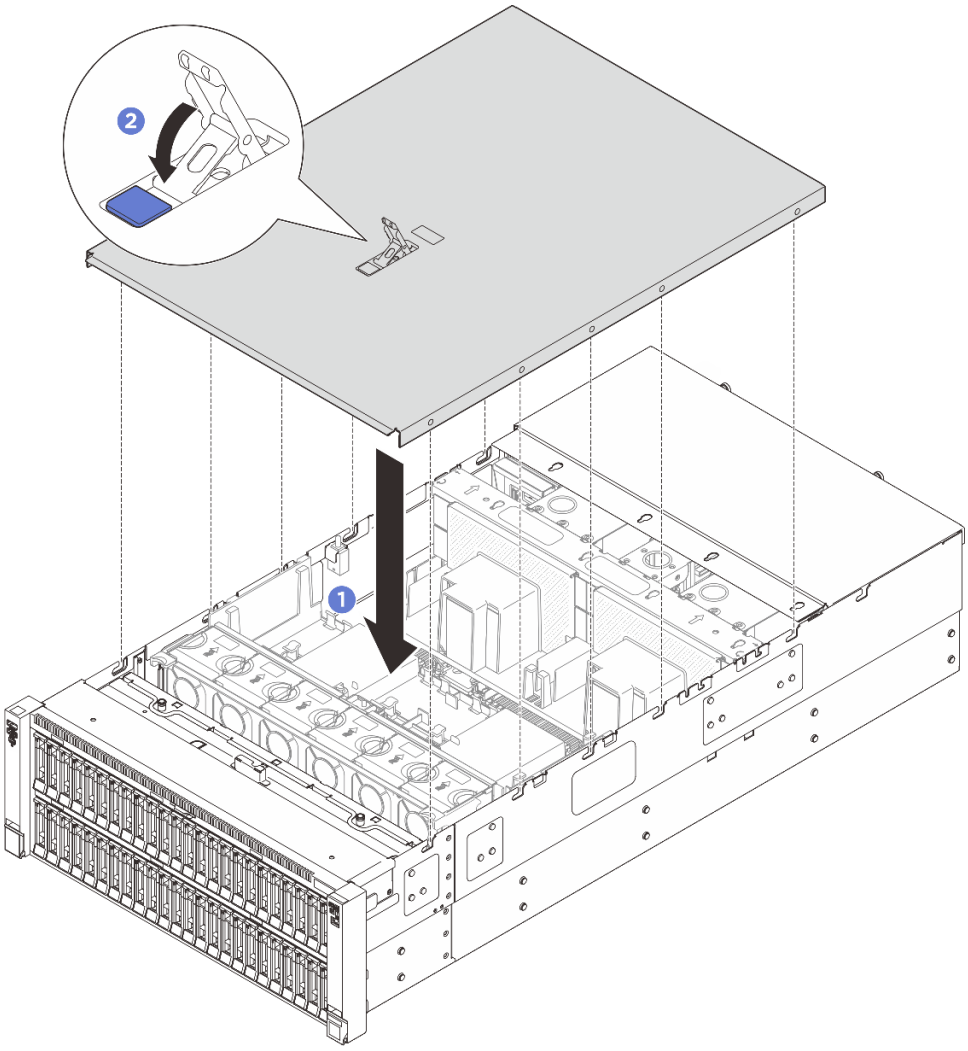

Figure 316. Front top cover installation

Step 1. Align the front top cover guide pins with the guide holes on the chassis; then place the front top cover on top of the server with both sides aligned.

Step 2. Rotate the latch down until it stops.

Step 3. (Optional) Lock the front top cover with a screwdriver.

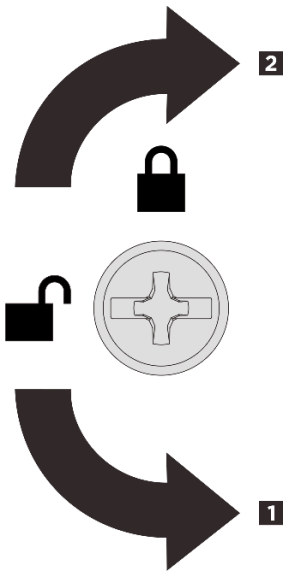

1 Unlocking direction
2 Locking direction

Figure 317. Front top cover locking/unlocking direction

After you finish

Complete the parts replacement. See “Complete the parts replacement” on page 382.

Demo video

Watch the procedure on YouTube

USB I/O board replacement

Follow the instructions in this section to remove and install the ThinkSystem V4 Front & Internal USB I/O Board.

Remove the USB I/O board

Follow the instructions in this section to remove the USB I/O board.

About this task

Attention:

- Read “Installation Guidelines” on page 45 and “Safety inspection checklist” on page 46 to ensure that you work safely.
- Power off the server and peripheral devices and disconnect the power cords and all external cables. See “Power off the server” on page 61.
- Prevent exposure to static electricity, which might lead to system halt and loss of data, by keeping static-sensitive components in their static-protective packages until installation, and handling these devices with an electrostatic-discharge wrist strap or other grounding system.

Procedure

Step 1. If the server is installed in a rack, slide the server out on its rack slide rails to gain access to the top covers, or remove the server from the rack. See “Server replacement” on page 67.

Step 2. Remove the front top cover. See “Remove the front top cover” on page 369.

Step 3. Remove the rear top cover. See “Remove the rear top cover” on page 371.

Step 4. If necessary, remove PCIe riser 1 to gain access to the USB I/O board. See “Remove the PCIe riser” on page 249.

Step 5. Remove the cable connected to the USB I/O board 1.

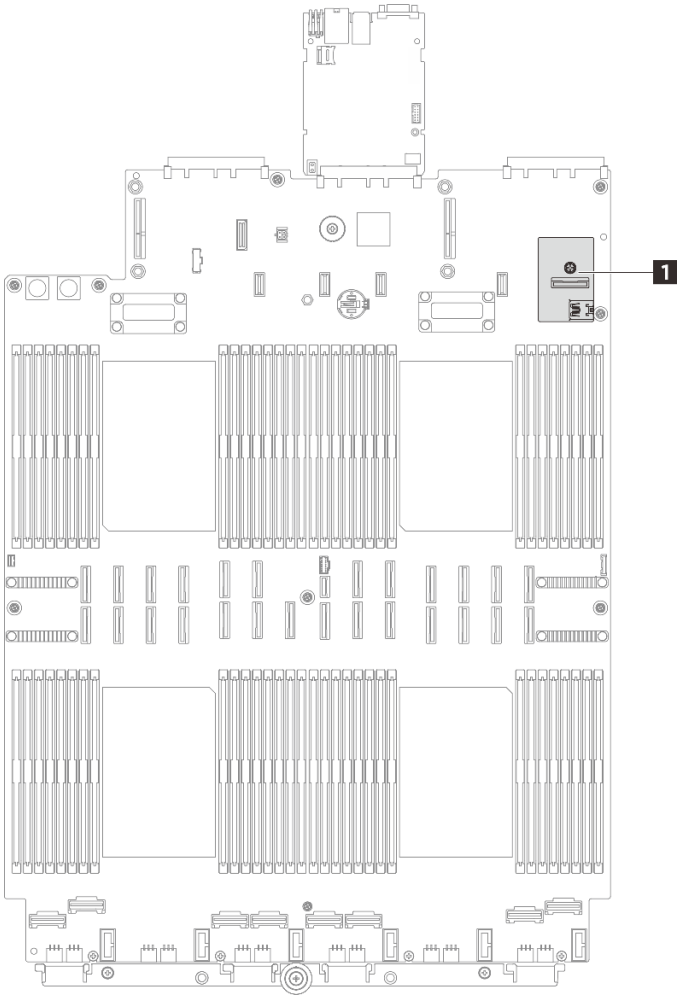

Step 6. Remove the USB I/O board.

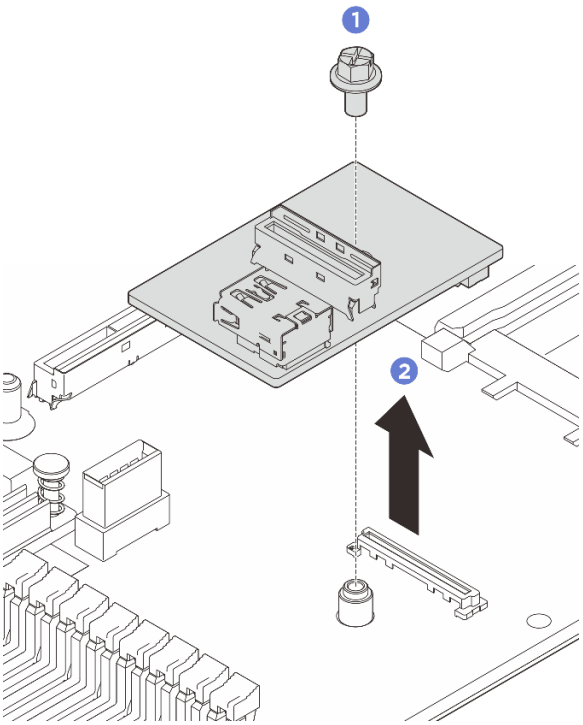

Figure 318. Removing USB I/O board

a. 1 Loosen one screw that locks the USB I/O board to the system board assembly.

b. 2 Lift the board off the connector and take it out.

After you finish

If you are instructed to return the component or optional device, follow all packaging instructions, and use any packaging materials for shipping that are supplied to you.

Demo video

Watch the procedure on YouTube

Install the USB I/O board

Follow the instructions in this section to install the USB I/O board.

About this task

Attention:

- Read “Installation Guidelines” on page 45 and “Safety inspection checklist” on page 46 to ensure that you work safely.
- Power off the server and peripheral devices and disconnect the power cords and all external cables. See “Power off the server” on page 61.
- Prevent exposure to static electricity, which might lead to system halt and loss of data, by keeping static-sensitive components in their static-protective packages until installation, and handling these devices with an electrostatic-discharge wrist strap or other grounding system.

Procedure

Step 1. Install the USB I/O board to the system board assembly.

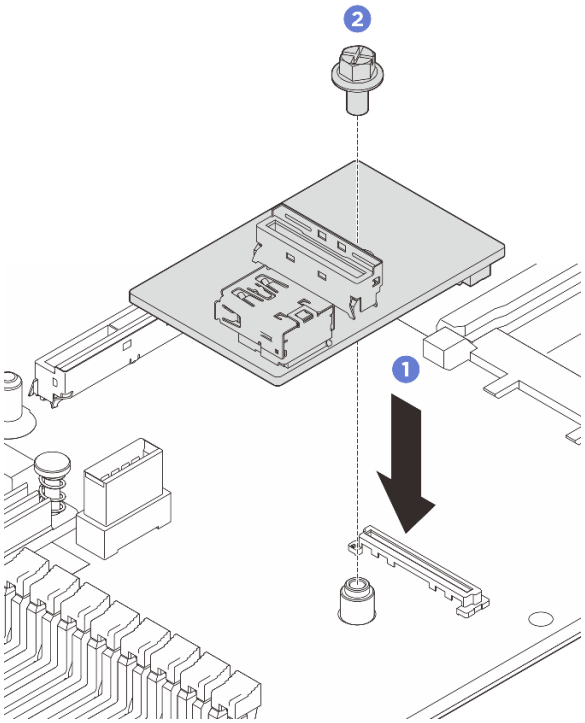

Figure 319. Installing USB I/O board

a. 1 Place the USB I/O board down as illustrated above to meet the connector on the system board assembly.

b. 2 Tighten one screw to secure the board.

Step 2. Connect the cable to the USB I/O board 1. See ***Internal Cable Routing Guide***.

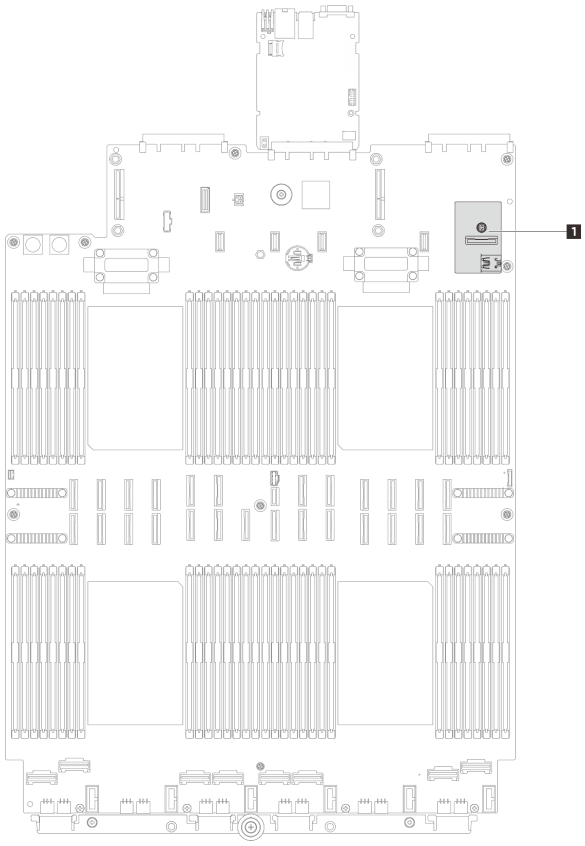

After you finish

1. Reinstall the PCIe risers. See “Install the PCIe riser” on page 261.
2. Reinstall the rear top cover. See “Install the rear top cover” on page 373.
3. Reinstall the front top cover. See “Install the front top cover” on page 375.
4. Complete the parts replacement. See “Complete the parts replacement” on page 382.
5. If necessary, refer to “USB I/O board problems” on page 434 to troubleshoot USB problems.

Demo video

Watch the procedure on YouTube

Complete the parts replacement

Go through the checklist to complete parts replacement

To complete the parts replacement, do the following:

1. Ensure that all components have been reassembled correctly and that no tools or loose screws are left inside your server.
2. Properly route and secure the cables in the server. See ***Internal Cable Routing Guide*** for more information on the internal cable routing.
3. Reinstall the front air baffle and the rear air baffle. See “Install the front air baffle” on page 109 and “Install the rear air baffle” on page 115.
4. Reinstall the rear top cover and the front top cover. See “Install the rear top cover” on page 373 and “Install the front top cover” on page 375.

5. If applicable, reinstall the security bezel. See “Install the security bezel” on page 342.
6. If the sever was installed in a rack, reinstall the server into the rack. See “Server replacement” on page 67.
7. Reconnect the power cords and any cables that you removed.
8. Power on the server and any peripheral devices. See “Power on the server” on page 60.
9. Update the server configuration.
   - Download and install the latest device drivers: http://datacentersupport.lenovo.com.
   - Update the system firmware. See “Update the firmware” on page 386.
   - Update the UEFI configuration. See https://pubs.lenovo.com/uefi-overview/.
   - Reconfigure the disk arrays if you have installed or removed a hot-swap drive or a RAID adapter. See https://pubs.lenovo.com/lxpm-overview/ for the LXPM documentation compatible with your server.

Chapter 6. System configuration

Complete these procedures to configure your system.

Set the network connection for the Lenovo XClarity Controller

Before you can access the Lenovo XClarity Controller over your network, you need to specify how Lenovo XClarity Controller will connect to the network. Depending on how the network connection is implemented, you might need to specify a static IP address as well.

The following methods are available to set the network connection for the Lenovo XClarity Controller if you are not using DHCP:

- If a monitor is attached to the server, you can use Lenovo XClarity Provisioning Manager to set the network connection.

  Complete the following steps to connect the Lenovo XClarity Controller to the network using the Lenovo XClarity Provisioning Manager.

  1. Start the server.
  2. Press the key specified in the on-screen instructions to display the Lenovo XClarity Provisioning Manager interface. (For more information, see the “Startup” section in the LXPM documentation compatible with your server at https://pubs.lenovo.com/lxpm-overview/.)
  3. Go to **LXPM → UEFI Setup → BMC Settings** to specify how the Lenovo XClarity Controller will connect to the network.
     - If you choose a static IP connection, make sure that you specify an IPv4 or IPv6 address that is available on the network.
     - If you choose a DHCP connection, make sure that the MAC address for the server has been configured in the DHCP server.
  4. Click **OK** to apply the setting and wait for two to three minutes.
  5. Use an IPv4 or IPv6 address to connect Lenovo XClarity Controller.

     Important: The Lenovo XClarity Controller is set initially with a user name of USERID and password of PASSW0RD (with a zero, not the letter O). This default user setting has Supervisor access. It is required to change this user name and password during your initial configuration for enhanced security.
- If no monitor is attached to the server, you can set the network connection through the Lenovo XClarity Controller interface. Connect an Ethernet cable from your laptop to XCC system management port on your server. For the location of the XCC system management port, see Chapter 2 “Server components” on page 19.

  Note: Make sure that you modify the IP settings on the laptop so that it is on the same network as the server default settings.

  The default IPv4 address and the IPv6 Link Local Address (LLA) is provided on the Lenovo XClarity Controller Network Access label that is affixed to the Pull Out Information Tab. See “Identify the server and access the Lenovo XClarity Controller” on page 41.

Set USB port for Lenovo XClarity Controller connection

Before you can access the Lenovo XClarity Controller through the USB port, you need to configure the USB port for Lenovo XClarity Controller connection.

© Copyright Lenovo 2025

Server support

To see if your server supports accessing Lenovo XClarity Controller through the USB port, check one of the following:

- Refer to Chapter 2 “Server components” on page 19.
-  If there is a wrench icon on the USB port of your server, you can set the management USB port to connect to Lenovo XClarity Controller. It is also the only USB port that supports USB automation update of the system I/O board (or firmware and RoT security module).

Setting the USB port for Lenovo XClarity Controller connection

You can switch the USB port between normal and Lenovo XClarity Controller management operation by performing one of the following steps.

- Hold the ID button for at least 3 seconds until its LED flashes slowly (once every couple of seconds). See Chapter 2 “Server components” on page 19 for ID button location.
- From the Lenovo XClarity Controller management controller CLI, run the `usbfp` command. For information about using the Lenovo XClarity Controller CLI, see the “Command-line interface” section in the XCC documentation compatible with your server at https://pubs.lenovo.com/lxcc-overview/.
- From the Lenovo XClarity Controller management controller web interface, click **BMC Configuration → Network → USB Management Port Assignment**. For information about Lenovo XClarity Controller web interface functions, see the “Description of XClarity Controller functions on web interface” section in the XCC documentation compatible with your server at https://pubs.lenovo.com/lxcc-overview/.

Checking USB port current setting

You can also check the current setting of the USB port using the Lenovo XClarity Controller management controller CLI (`usbfp` command) or the Lenovo XClarity Controller management controller web interface (**BMC Configuration → Network → USB Management Port Assignment**). See the “Command-line interface” and “Description of XClarity Controller functions on web interface” sections in the XCC documentation compatible with your server at https://pubs.lenovo.com/lxcc-overview/.

Update the firmware

Several options are available to update the firmware for the server.

You can use the tools listed here to update the most current firmware for your server and the devices that are installed in the server.

Notes: It is recommended to update the firmware in the following sequence:
- BMC (XCC)
- FPGA HPM
- FPGA SCM
- UEFI

- Best practices related to updating firmware is available at the following site:
  - https://lenovopress.lenovo.com/lp0656-lenovo-thinksystem-firmware-and-driver-update-best-practices
- The latest firmware can be found at the following site:
  - https://datacentersupport.lenovo.com/products/servers/thinksystem/sr860v4/7djn/downloads/driver-list
- You can subscribe to product notification to stay up to date on firmware updates:

– https://datacentersupport.lenovo.com/solutions/ht509500

Update Bundles (Service Packs)

Lenovo typically releases firmware in bundles called Update Bundles (Service Packs). To ensure that all of the firmware updates are compatible, you should update all firmware at the same time. If you are updating firmware for both the Lenovo XClarity Controller and UEFI, update the firmware for Lenovo XClarity Controller first.

Update method terminology

- **In-band update**. The installation or update is performed using a tool or application within an operating system that is executing on the server's core CPU.
- **Out-of-band update**. The installation or update is performed by the Lenovo XClarity Controller collecting the update and then directing the update to the target subsystem or device. Out-of-band updates have no dependency on an operating system executing on the core CPU. However, most out-of-band operations do require the server to be in the S0 (Working) power state.
- **On-Target update.** The installation or update is initiated from an installed operating system executing on the target server itself.
- **Off-Target update.** The installation or update is initiated from a computing device interacting directly with the server's Lenovo XClarity Controller.
- **Update Bundles (Service Packs)**. Update Bundles (Service Packs) are bundled updates designed and tested to provide the interdependent level of functionality, performance, and compatibility. Update Bundles (Service Packs) are server machine-type specific and are built (with firmware and device driver updates) to support specific Windows Server, Red Hat Enterprise Linux (RHEL) and SUSE Linux Enterprise Server (SLES) operating system distributions. Machine-type-specific firmware-only Update Bundles (Service Packs) are also available.

Firmware updating tools

See the following table to determine the best Lenovo tool to use for installing and setting up the firmware:

Tool	Update Methods Supported	Core System Firmware Updates	I/O Devices Firmware Updates	Drive Firmware Updates	Graphical user interface	Command line interface	Supports Update Bundles (Service Packs)
Lenovo XClarity Provisioning Manager (LXPM)	In-band[2] On-Target	√			√		
Lenovo XClarity Controller (XCC)	In-band[4] Out-of-band Off-Target	√	Selected I/O devices	√[3]	√		√
Lenovo XClarity Essentials OneCLI (OneCLI)	In-band Out-of-band On-Target Off-Target	√	All I/O devices	√[3]		√	√

Tool	Update Methods Supported	Core System Firmware Updates	I/O Devices Firmware Updates	Drive Firmware Updates	Graphical user interface	Command line interface	Supports Update Bundles (Service Packs)
Lenovo XClarity Essentials UpdateXpress (LXCE)	In-band Out-of-band On-Target Off-Target	√	All I/O devices		√		√
Lenovo XClarity Essentials Bootable Media Creator (BoMC)	In-band Out-of-band Off-Target	√	All I/O devices		√ (BoMC application)	√ (BoMC application)	√
Lenovo XClarity Administrator (LXCA)	In-band[1] Out-of-band[2] Off-Target	√	All I/O devices	√	√		√
Lenovo XClarity Integrator (LXCI) for VMware vCenter	Out-of-band Off-Target	√	Selected I/O devices		√		
Lenovo XClarity Integrator (LXCI) for Microsoft Windows Admin Center	In-band Out-of-band On-Target Off-Target	√	All I/O devices		√		√

Notes:

1. For I/O firmware updates.
2. For BMC and UEFI firmware updates.
3. Drive firmware update is only supported by the tools and methods below:
   - XCC Bare Metal Update (BMU): In-band, and requires system reboot.
   - Lenovo XClarity Essentials OneCLI: In-band, and does not require system reboot.
4. Bare Metal Update (BMU) only.

- **Lenovo XClarity Provisioning Manager**

  From Lenovo XClarity Provisioning Manager, you can update the Lenovo XClarity Controller firmware, the UEFI firmware, and the Lenovo XClarity Provisioning Manager software.

  Note: By default, the Lenovo XClarity Provisioning Manager Graphical User Interface is displayed when you start the server and press the key specified in the on-screen instructions. If you have changed that

default to be the text-based system setup, you can bring up the Graphical User Interface from the text-based system setup interface.

For additional information about using Lenovo XClarity Provisioning Manager to update firmware, see:

"Firmware Update" section in the LXPM documentation compatible with your server at https://pubs.lenovo.com/lxpm-overview/

- **Lenovo XClarity Controller**

  If you need to install a specific update, you can use the Lenovo XClarity Controller interface for a specific server.

  Notes:

  – To perform an in-band update through Windows or Linux, the operating system driver must be installed and the Ethernet-over-USB (sometimes called LAN over USB) interface must be enabled.

    For additional information about configuring Ethernet over USB, see:

    "Configuring Ethernet over USB" section in the XCC documentation version compatible with your server at https://pubs.lenovo.com/lxcc-overview/

  – If you update firmware through the Lenovo XClarity Controller, make sure that you have downloaded and installed the latest device drivers for the operating system that is running on the server.

  For additional information about using Lenovo XClarity Controller to update firmware, see:

  "Updating Server Firmware" section in the XCC documentation compatible with your server at https://pubs.lenovo.com/lxcc-overview/

- **Lenovo XClarity Essentials OneCLI**

  Lenovo XClarity Essentials OneCLI is a collection of command line applications that can be used to manage Lenovo servers. Its update application can be used to update firmware and device drivers for your servers. The update can be performed within the host operating system of the server (in-band) or remotely through the BMC of the server (out-of-band).

  For additional information about using Lenovo XClarity Essentials OneCLI to update firmware, see:

  https://pubs.lenovo.com/lxce-onecli/onecli_c_update

- **Lenovo XClarity Essentials UpdateXpress**

  Lenovo XClarity Essentials UpdateXpress provides most of OneCLI update functions through a graphical user interface (GUI). It can be used to acquire and deploy Update Bundles (Service Packs) update packages and individual updates. Update Bundles (Service Packs) contain firmware and device driver updates for Microsoft Windows and for Linux.

  You can obtain Lenovo XClarity Essentials UpdateXpress from the following location:

  https://datacentersupport.lenovo.com/solutions/lnvo-xpress

- **Lenovo XClarity Essentials Bootable Media Creator**

  You can use Lenovo XClarity Essentials Bootable Media Creator to create bootable media that is suitable for firmware updates, VPD updates, inventory and FFDC collection, advanced system configuration, FoD Keys management, secure erase, RAID configuration, and diagnostics on supported servers.

  You can obtain Lenovo XClarity Essentials BoMC from the following location:

  https://datacentersupport.lenovo.com/solutions/lnvo-bomc

- **Lenovo XClarity Administrator**

  If you are managing multiple servers using the Lenovo XClarity Administrator, you can update firmware for all managed servers through that interface. Firmware management is simplified by assigning firmware-

compliance policies to managed endpoints. When you create and assign a compliance policy to managed endpoints, Lenovo XClarity Administrator monitors changes to the inventory for those endpoints and flags any endpoints that are out of compliance.

For additional information about using Lenovo XClarity Administrator to update firmware, see:

https://pubs.lenovo.com/lxca/update_fw

- **Lenovo XClarity Integrator offerings**

  Lenovo XClarity Integrator offerings can integrate management features of Lenovo XClarity Administrator and your server with software used in a certain deployment infrastructure, such as VMware vCenter, Microsoft Admin Center, or Microsoft System Center.

  For additional information about using Lenovo XClarity Integrator to update firmware, see:

  https://pubs.lenovo.com/lxci-overview/

Configure the firmware

Several options are available to install and set up the firmware for the server.

Note: UEFI **Legacy Mode** is not supported by ThinkSystem V4 products.

- **Lenovo XClarity Provisioning Manager (LXPM)**

  From Lenovo XClarity Provisioning Manager, you can configure the UEFI settings for your server.

  Notes: The Lenovo XClarity Provisioning Manager provides a Graphical User Interface to configure a server. The text-based interface to system configuration (the Setup Utility) is also available. From Lenovo XClarity Provisioning Manager, you can choose to restart the server and access the text-based interface. In addition, you can choose to make the text-based interface the default interface that is displayed when you start LXPM. To do this, go to **Lenovo XClarity Provisioning Manager → UEFI Setup → System Settings → <F1>Start Control → Text Setup**. To start the server with Graphic User Interface, select **Auto** or **Tool Suite**.

  See the following documentations for more information:

  - Search for the LXPM documentation version compatible with your server at https://pubs.lenovo.com/lxpm-overview/
  - *UEFI User Guide* at https://pubs.lenovo.com/uefi-overview/

- **Lenovo XClarity Essentials OneCLI**

  You can use the config application and commands to view the current system configuration settings and make changes to Lenovo XClarity Controller and UEFI. The saved configuration information can be used to replicate or restore other systems.

  For information about configuring the server using Lenovo XClarity Essentials OneCLI, see:

  https://pubs.lenovo.com/lxce-onecli/onecli_c_settings_info_commands

- **Lenovo XClarity Administrator**

  You can quickly provision and pre-provision all of your servers using a consistent configuration. Configuration settings (such as local storage, I/O adapters, boot settings, firmware, ports, and Lenovo XClarity Controller and UEFI settings) are saved as a server pattern that can be applied to one or more managed servers. When the server patterns are updated, the changes are automatically deployed to the applied servers.

  Specific details about configuring the server using Lenovo XClarity Administrator are available at:

https://pubs.lenovo.com/lxca/server_configuring

- **Lenovo XClarity Controller**

  You can configure the management processor for the server through the Lenovo XClarity Controller Web interface, the command-line interface, or Redfish API.

  For information about configuring the server using Lenovo XClarity Controller, see:

  "Configuring the Server" section in the XCC documentation compatible with your server at https://pubs.lenovo.com/lxcc-overview/

Memory module configuration

Memory performance depends on several variables, such as memory mode, memory speed, memory ranks, memory population and processor.

Information about optimizing memory performance and configuring memory is available at the Lenovo Press website:

https://lenovopress.lenovo.com/servers/options/memory

In addition, you can take advantage of a memory configurator, which is available at the following site:

https://dcsc.lenovo.com/#/memory_configuration

Enable Software Guard Extensions (SGX)

Intel® Software Guard Extensions (Intel® SGX) operates under the assumption that the security perimeter includes only the internals of the CPU package, and leaves the DRAM untrusted.

Complete the following steps to enable SGX.

Step 1. **Make sure** to refer to "Memory module installation rules and order" on page 48, which specifies whether your server supports SGX and lists the memory module population sequence for SGX configuration. (DIMM configuration must be at least 8 DIMMs per socket to support SGX.)

Step 2. Restart the system. Before the operating system starts up, press the key specified in the on-screen instructions to enter the Setup Utility. (For more information, see the "Startup" section in the LXPM documentation compatible with your server at https://pubs.lenovo.com/lxpm-overview/.)

Step 3. Go to **System settings → Processors → Total Memory Encryption (TME)** and enable the option.

Step 4. Save the changes, then go to **System settings → Processors → SW Guard Extension (SGX)** and enable the option.

RAID configuration

Using a Redundant Array of Independent Disks (RAID) to store data remains one of the most common and cost-efficient methods to increase server's storage performance, availability, and capacity.

RAID increases performance by allowing multiple drives to process I/O requests simultaneously. RAID can also prevent data loss in case of a drive failure by reconstructing (or rebuilding) the missing data from the failed drive using the data from the remaining drives.

RAID array (also known as RAID drive group) is a group of multiple physical drives that uses a certain common method to distribute data across the drives. A virtual drive (also known as virtual disk or logical drive) is a partition in the drive group that is made up of contiguous data segments on the drives. Virtual drive

is presented up to the host operating system as a physical disk that can be partitioned to create OS logical drives or volumes.

An introduction to RAID is available at the following Lenovo Press website:

https://lenovopress.lenovo.com/lp0578-lenovo-raid-introduction

Detailed information about RAID management tools and resources is available at the following Lenovo Press website:

https://lenovopress.lenovo.com/lp0579-lenovo-raid-management-tools-and-resources

Intel VROC

Enabling Intel VROC

Before setting up RAID for NVMe drives, follow the below steps to enable VROC:

1. Restart the system. Before the operating system starts up, press the key specified in the on-screen instructions to enter the Setup Utility. (For more information, see the “Startup” section in the LXPM documentation compatible with your server at https://pubs.lenovo.com/lxpm-overview/.)
2. Go to **System settings → Devices and I/O Ports → Intel® VMD technology → Enable/Disable Intel® VMD** and enable the option.
3. Save the changes and reboot the system.

Intel VROC configurations

Intel offers various VROC configurations with different RAID level and SSD support. See the following for more details.

Notes:
- Supported RAID levels varies by model. For the RAID level supported by SR860 V4, see “Technical specifications” on page 3.
- For more information about acquiring and installing the activation key, see https://fod.lenovo.com/lkms.

Intel VROC configurations for PCIe NVMe SSDs	Requirements
Intel VROC Standard	• Supports RAID levels 0, 1, and 10 • Requires an activation key
Intel VROC Premium	• Supports RAID levels 0, 1, 5, and 10 • Requires an activation key
Intel VROC RAID1 Only	• RAID 1 only • Requires an activation key

Deploy the operating system

Several options are available to deploy an operating system on the server.

Available operating systems

- Microsoft Windows Server
- Red Hat Enterprise Linux
- SUSE Linux Enterprise Server

- Canonical Ubuntu

Complete list of available operating systems: https://lenovopress.lenovo.com/osig.

Tool-based deployment

- **Multi-server**

  Available tools:

  – Lenovo XClarity Administrator

    https://pubs.lenovo.com/lxca/compute_node_image_deployment

- **Single-server**

  Available tools:

  – Lenovo XClarity Provisioning Manager

    “OS Installation” section in the LXPM documentation compatible with your server at https://pubs.lenovo.com/lxpm-overview/

Manual deployment

If you cannot access the above tools, follow the instructions below, download the corresponding *OS Installation Guide*, and deploy the operating system manually by referring to the guide.

1. Go to https://datacentersupport.lenovo.com/solutions/server-os.
2. Select an operating system from the navigation pane and click **Resources**.
3. Locate the “OS Install Guides” area and click the installation instructions. Then, follow the instructions to complete the operation system deployment task.

Back up the server configuration

After setting up the server or making changes to the configuration, it is a good practice to make a complete backup of the server configuration.

Make sure that you create backups for the following server components:

- **Management processor**

  You can back up the management processor configuration through the Lenovo XClarity Controller interface. For details about backing up the management processor configuration, see:

  “Backing up the BMC configuration” section in the XCC documentation compatible with your server at https://pubs.lenovo.com/lxcc-overview/.

  Alternatively, you can use the `backup` command from Lenovo XClarity Essentials OneCLI to create a backup of all configuration settings. For more information about the `backup` command, see:

  https://pubs.lenovo.com/lxce-onecli/config_backup

- **Operating system**

  Use your backup methods to back up the operating system and user data for the server.

Chapter 7. Problem determination

Use the information in this section to isolate and resolve issues that you might encounter while using your server.

Lenovo servers can be configured to automatically notify Lenovo Support if certain events are generated. You can configure automatic notification, also known as Call Home, from management applications, such as the Lenovo XClarity Administrator. If you configure automatic problem notification, Lenovo Support is automatically alerted whenever a server encounters a potentially significant event.

To isolate a problem, you should typically begin with the event log of the application that is managing the server:

- If you are managing the server from the Lenovo XClarity Administrator, begin with the Lenovo XClarity Administrator event log.
- If you are using some other management application, begin with the Lenovo XClarity Controller event log.

Web resources

- **Tech tips**

  Lenovo continually updates the support website with the latest tips and techniques that you can use to solve issues that your server might encounter. These Tech Tips (also called retain tips or service bulletins) provide procedures to work around issues or solve problems related to the operation of your server.

  To find the Tech Tips available for your server:

  1. Go to http://datacentersupport.lenovo.com and navigate to the support page for your server.
  2. Click on **How To's** from the navigation pane.
  3. Click **Article Type → Solution** from the drop-down menu.

     Follow the on-screen instructions to choose the category for the problem that you are having.

- **Lenovo Data Center Forum**
  - Check https://forums.lenovo.com/t5/Datacenter-Systems/ct-p/sv_eg to see if someone else has encountered a similar problem.

Event logs

An *alert* is a message or other indication that signals an event or an impending event. Alerts are generated by the Lenovo XClarity Controller or by UEFI in the servers. These alerts are stored in the Lenovo XClarity Controller Event Log. If the server is managed by the Chassis Management Module 2 or by the Lenovo XClarity Administrator, alerts are automatically forwarded to those management applications.

Note: For a listing of events, including user actions that might need to be performed to recover from an event, see the *Messages and Codes Reference*, which is available at https://pubs.lenovo.com/sr860v4/pdf_files.html.

Lenovo XClarity Administrator event log

If you are using Lenovo XClarity Administrator to manage server, network, and storage hardware, you can view the events from all managed devices through the XClarity Administrator.

© Copyright Lenovo 2025

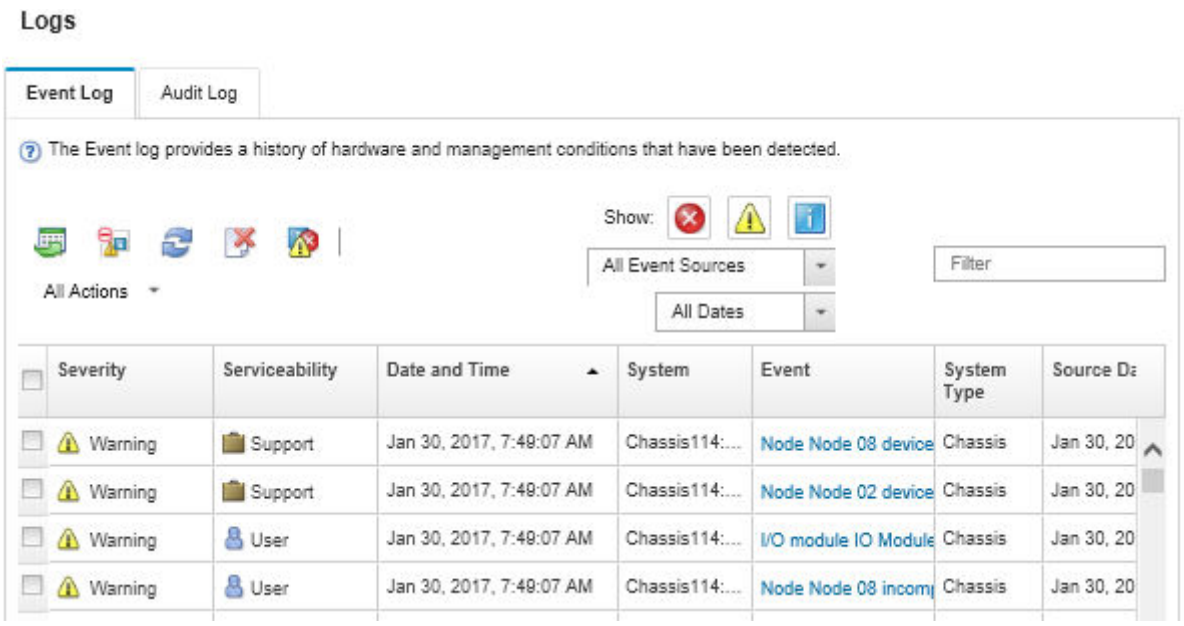

Figure 320. Lenovo XClarity Administrator event log

For more information about working with events from XClarity Administrator, see:

https://pubs.lenovo.com/lxca/events_vieweventlog

Lenovo XClarity Controller event log

The Lenovo XClarity Controller monitors the physical state of the server and its components using sensors that measure internal physical variables such as temperature, power-supply voltages, fan speeds, and component status. The Lenovo XClarity Controller provides various interfaces to systems management software and to system administrators and users to enable remote management and control of a server.

The Lenovo XClarity Controller monitors all components of the server and posts events in the Lenovo XClarity Controller event log.

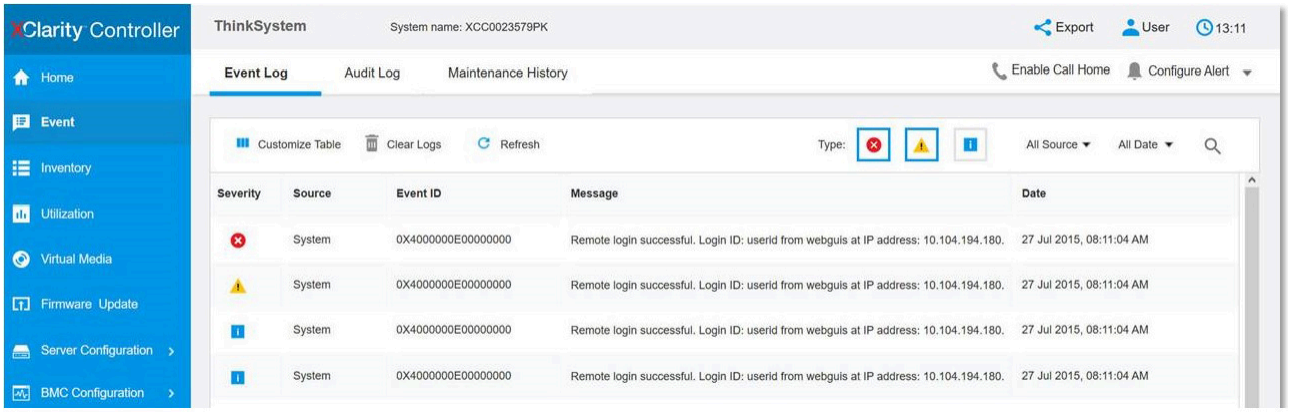

Figure 321. Lenovo XClarity Controller event log

For more information about accessing the Lenovo XClarity Controller event log, see:

“Viewing Event Logs” section in the XCC documentation compatible with your server at https://pubs.lenovo.com/lxcc-overview/

Troubleshooting by system LEDs and diagnostics display

See the following section for information on available system LEDs and diagnostics display.

Drive LEDs

This topic provides information on the drive LEDs.

2.5-inch drive LEDs

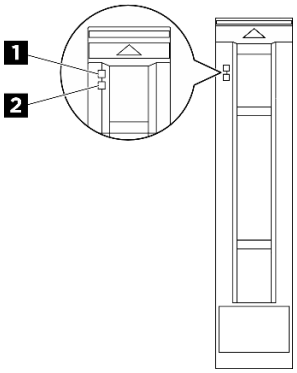

Figure 322. 2.5-inch drive LEDs

LED	Status	Description
1 Drive activity LED (green)	Solid on	The drive is powered but not active.
	Blinking	The drive is being accessed (reading or writing data).
2 Drive status LED (yellow)	Solid on	The drive has an error.
	Slow blinking (about one flash per second)	The drive is being rebuilt.
	Fast blinking (about three flashes per second)	The drive is being identified.

E3.S 1T drive LEDs

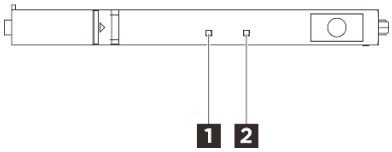

Figure 323. E3.S 1T drive LEDs

LED	Status	Description
1 Drive status LED (yellow)	Solid on	The drive has an error.

LED	Status	Description
	Slow blinking (about one flash per second)	The drive is being rebuilt.
	Fast blinking (about three flashes per second)	The drive is being identified.
2 Drive activity LED (green)	Solid on	The drive is powered but not active.
	Blinking	The drive is being accessed (reading or writing data).

E3.S CMM LEDs

This topic provides information on LEDs of E3.S Compute Express Link (CXL) memory (CMM).

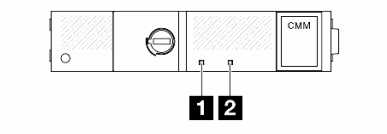

Figure 324. E3.S CMM LEDs

LED	Status	Description
1 Fault LED (amber)	Off	The CMM is healthy.
	On	The CMM is faulty.
2 Health LED (white)	On	The CMM is powered but not active. Removal is not permitted.
	Blinking	The CMM is active. Removal is not permitted.
	Off	The CMM is not powered. Removal is permitted.

External diagnostics handset

The external diagnostics handset is an external device that is connected to the server with a cable, and it allows quick access to system information such as errors, system status, firmware, network, and health information.

Location of the external diagnostics handset

Location	Callouts
The external diagnostics handset is connected to the server with an external cable. 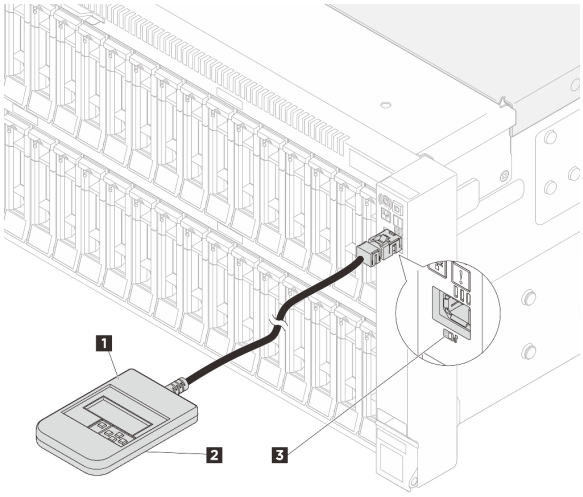 	1 External diagnostics handset
	2 Magnetic bottom With this component, the diagnostic handset can be attached to the top or side of the rack with hands spared for service tasks.
	3 External diagnostics connector This connector is located on the front of the server, and is used to connect an external diagnostics handset.

Note: When unplugging the external diagnostics handset, see the following instructions:

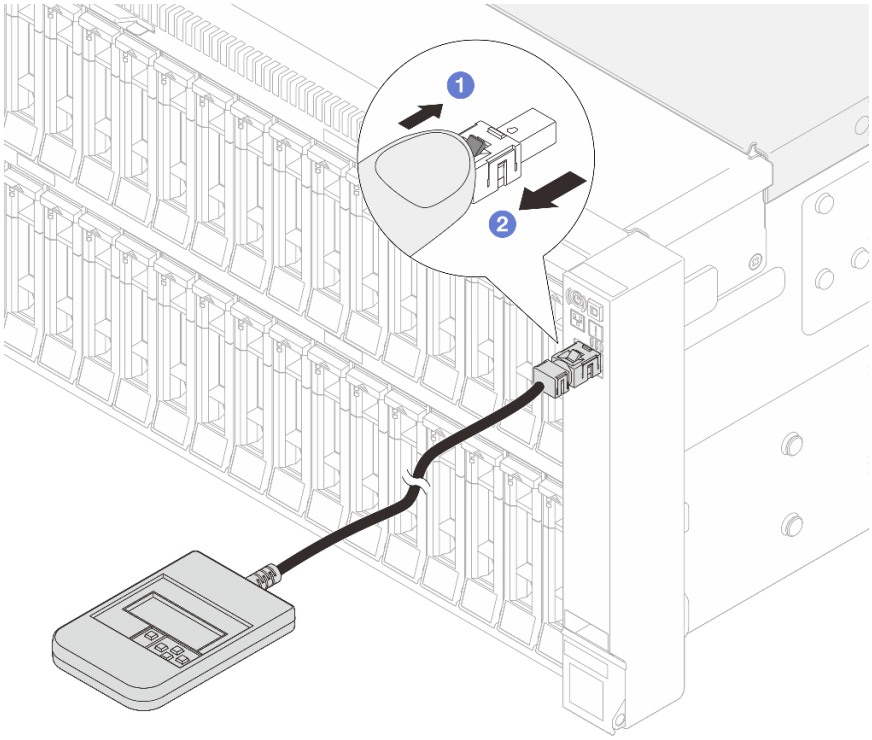

1. Press the plastic clip on the plug forward.
2. Hold the clip and remove the cable from the connector.

Display panel overview

The diagnostics device consists of an LCD display and 5 navigation buttons.

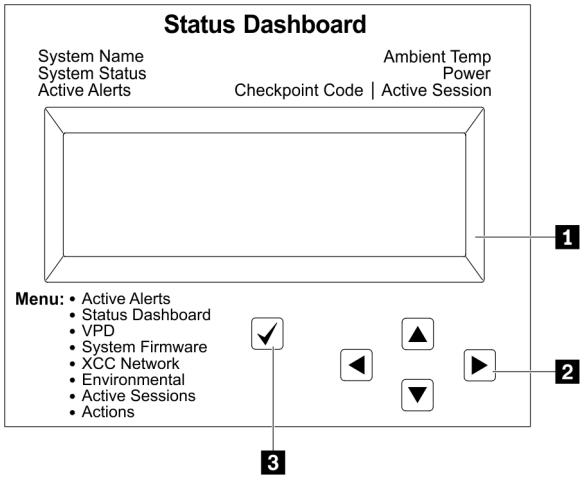

1 LCD display
2 Scroll buttons (up/down/left/right) Press the scroll buttons to locate and select system information.
3 Select button Press the select button to select from the options in the menu.

Option flow diagram

The LCD panel displays various system information. Navigate through the options with the scroll keys.

Depending on the model, the options and entries on the LCD display might be different.

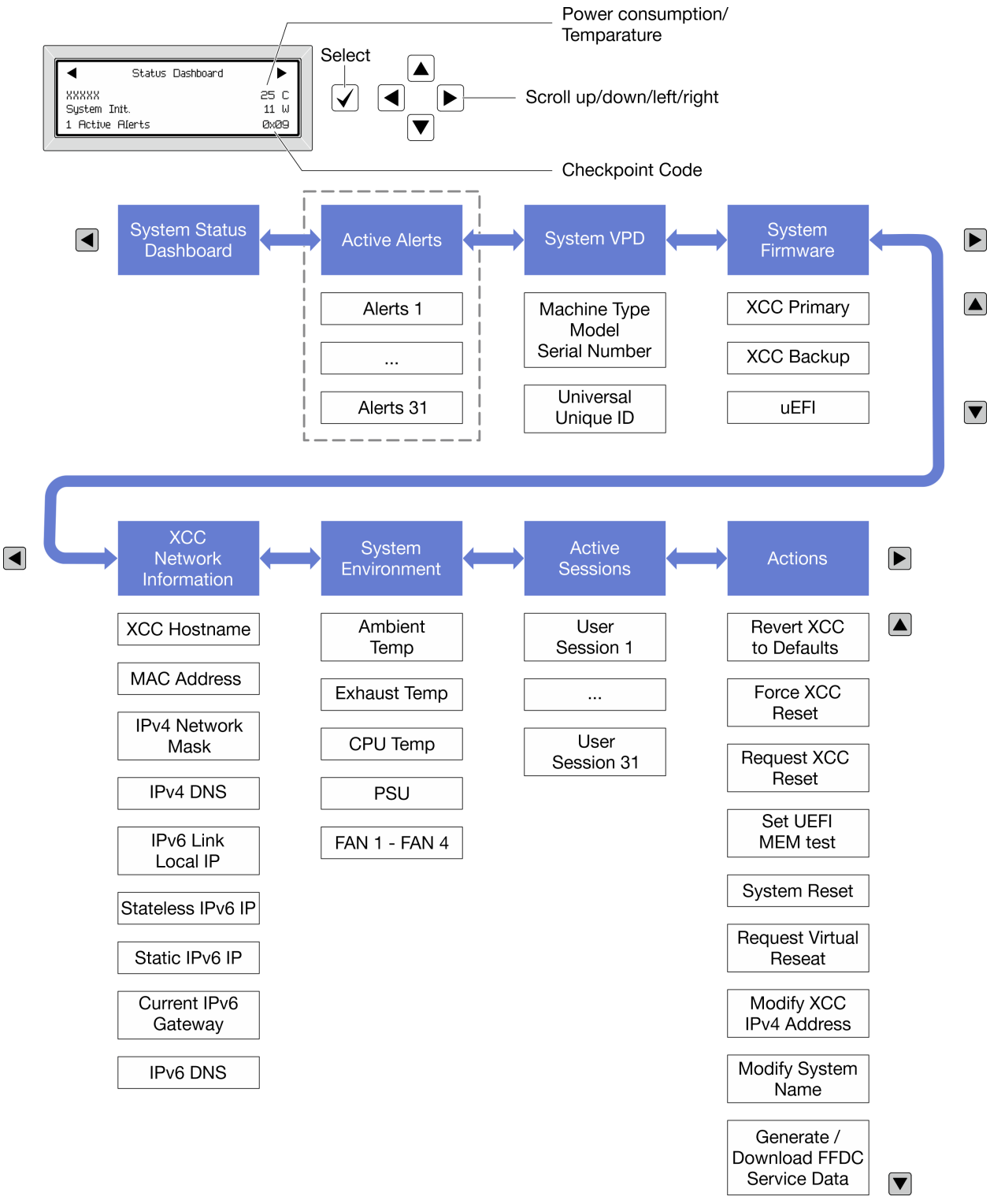

Full menu list

Following is the list of available options. Switch between an option and the subordinate information entries with the select button, and switch among options or information entries with the scroll buttons.

Depending on the model, the options and entries on the LCD display might be different.

Home Menu (System Status Dashboard)

Home Menu	Example
1 System name 2 System status 3 Active alert quantity 4 Temperature 5 Power consumption 6 Checkpoint code	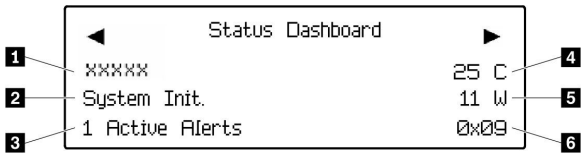

Active Alerts

Sub Menu	Example
Home screen: Active error quantity **Note:** The “Active Alerts” menu displays only the quantity of active errors. If no errors occur, the “Active Alerts” menu will not be available during navigation.	1 Active Alerts
Details screen: • Error message ID (Type: Error/Warning/Information) • Occurrence time • Possible sources of the error	Active Alerts: 1 Press ▼ to view alert details FQXSPPU009N(Error) 04/07/2020 02:37:39 PM CPU 1 Status: Configuration Error

System VPD Information

Sub Menu	Example
• Machine type and serial number • Universal Unique ID (UUID)	Machine Type: xxxx Serial Num: xxxxxx Universal Unique ID: xxxxxxxxxxxxxxxxxxxxxxxxxxxx

System Firmware

Sub Menu	Example
XCC Primary • Firmware level (status) • Build ID • Version number • Release date	XCC Primary (Active) Build: DVI399T Version: 4.07 Date: 2020-04-07
XCC Backup • Firmware level (status) • Build ID • Version number • Release date	XCC Backup (Active) Build: D8BT05I Version: 1.00 Date: 2019-12-30
UEFI • Firmware level (status) • Build ID • Version number • Release date	UEFI (Inactive) Build: D0E101P Version: 1.00 Date: 2019-12-26

XCC Network Information

Sub Menu	Example
• XCC hostname • MAC address • IPv4 Network Mask • IPv4 DNS • IPv6 Link Local IP • Stateless IPv6 IP • Static IPv6 IP • Current IPv6 Gateway • IPv6 DNS **Note:** Only the MAC address that is currently in use is displayed (extension or shared).	XCC Network Information XCC Hostname: XCC-xxxx-SN MAC Address: xx:xx:xx:xx:xx:xx IPv4 IP: xx.xx.xx.xx IPv4 Network Mask: x.x.x.x IPv4 Default Gateway: x.x.x.x

System Environmental Information

Sub Menu	Example
• Ambient temperature • Exhaust temperature • CPU temperature • PSU status • Spinning speed of fans by RPM	Ambient Temp: 24 C Exhaust Temp: 30 C CPU1 Temp: 50 C PSU1: Vin= 213 w Inlet= 26 C FAN1 Front: 21000 RPM FAN2 Front: 21000 RPM FAN3 Front: 21000 RPM FAN4 Front: 21000 RPM

Active Sessions

Sub Menu	Example
Quantity of active sessions	Active User Sessions: 1

Actions

Sub Menu	Example
Several quick actions are available: • Revert XCC to Defaults • Force XCC Reset • Request XCC Reset • Set UEFI Memory Test • Request Virtual Reseat • Modify XCC Static IPv4 Address/Net mask/Gateway • Modify System Name • Generate/Download FFDC Service Data	Request XCC Reset? This will request the BMC to reboot itself. Hold √ for 3 seconds

Front-operator-panel LEDs and buttons

The front operator panel of the server provides controls, connectors, and LEDs.

Note: Diagnostics panel with an LCD display is available for some models. For details, see “External diagnostics handset” on page 398.

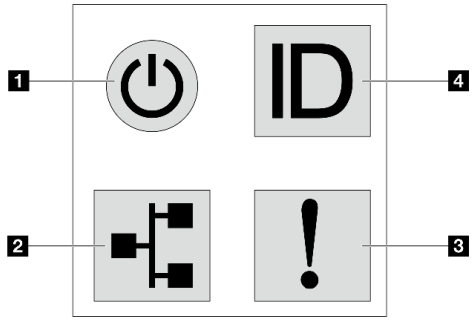

Figure 325. Diagnostics panel

1 Power button with power status LED

You can press the power button to power on the server when you finish setting up the server. You also can hold the power button for several seconds to power off the server if you cannot shut down the server from the operating system. The power status LED helps you determine the current power status.

Status	Color	Description
Solid on	Green	The server is on and running.
Slow blinking (about one flash per second)	Green	The server is off and is ready to be powered on (standby state).
Fast blinking (about four flashes per second)	Green	• The server is off, but the XClarity Controller is initializing, and the server is not ready to be powered on. • System-board-assembly power has failed.
Off	None	Power is not present, or the power supply has failed.

2 Network activity LED

Compatibility of the NIC adapter and the network activity LED

NIC adapter	Network activity LED
OCP module	Support
PCIe NIC adapter	Not support

When an OCP module is installed, the network activity LED on the front I/O assembly helps you identify the network connectivity and activity. If no OCP module is installed, this LED is off.

Status	Color	Description
On	Green	The server is connected to a network.
Blinking	Green	The network is connected and active.
Off	None	The server is disconnected from the network. **Note:** If the network activity LED is off when an OCP module is installed, check the network ports in the rear of your server to determine which port is disconnected.

3 System error LED

The system error LED helps you to determine if there are any system errors.

Status	Color	Description	Action
On	Amber	An error has been detected on the server. Causes might include but are not limited to the following errors: • The temperature of the server reached the non-critical temperature threshold. • The voltage of the server reached the non-critical voltage threshold. • A fan has been detected to be running at low speed. • A hot-swap fan has been removed. • The power supply has a critical error. • The power supply is not connected to the power. • A processor error. • A system I/O board or processor board error. • Abnormal status is detected on the Processor Neptune® Core Module.	• Check the Lenovo XClarity Controller event log and the system event log to determine the exact cause of the error. • Check if additional LEDs in the server are lit. It will direct you to the error source. See “Troubleshooting by system LEDs and diagnostics display” on page 397. • Save the log if necessary. **Note:** For server models with Processor Neptune® Core Module installed, it is required to open the top cover to check the LED status of the leakage detection sensor module. For more instructions, see “Leakage detection sensor module LED” on page 406.
Off	None	The server is off or the server is on and is working correctly.	None.

4 System ID button with system ID LED

Use this system ID button and the blue system ID LED to visually locate the server. A system ID LED is also located on the rear of the server. Each time you press the system ID button, the state of both the system ID LEDs changes. The LEDs can be changed to on, blinking, or off. You can also use the Lenovo XClarity Controller or a remote management program to change the state of the system ID LEDs to assist in visually locating the server among other servers.

If the XClarity Controller USB connector is set to have both the USB 2.0 function and XClarity Controller management function, you can press the system ID button for three seconds to switch between the two functions.

Leakage detection sensor module LED

This topic provides information about the LED on the leakage detection sensor module.

The leakage detection sensor module on the Processor Neptune® Core Module comes with one LED. The following illustration shows the LED on the module.

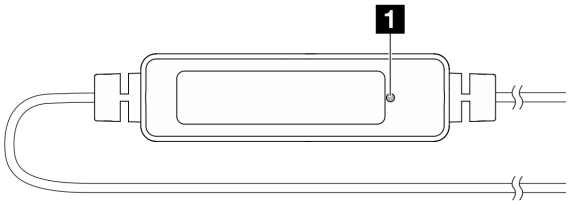

Figure 326. Leak detection LED

The following table describes the status that are indicated by the leakage detection sensor module LED.

1 Leakage detection sensor LED (green)	
Description	• On: No liquid leakage or cable break alert. • Slow blinking (about two flashes per second): Cable break alert. • Fast blinking (about five flashes per second): Liquid leak alert.
Action	• If the cable breaks, replace the liquid cooling module (trained technicians only). • If liquid leakage happens, see “Liquid cooling module problems” on page 417.

Processor board LEDs

The following illustrations show the light-emitting diodes (LEDs) on the processor board assembly.

Press the power button to light the LEDs on the processor board assembly when the power source has been removed from the server.

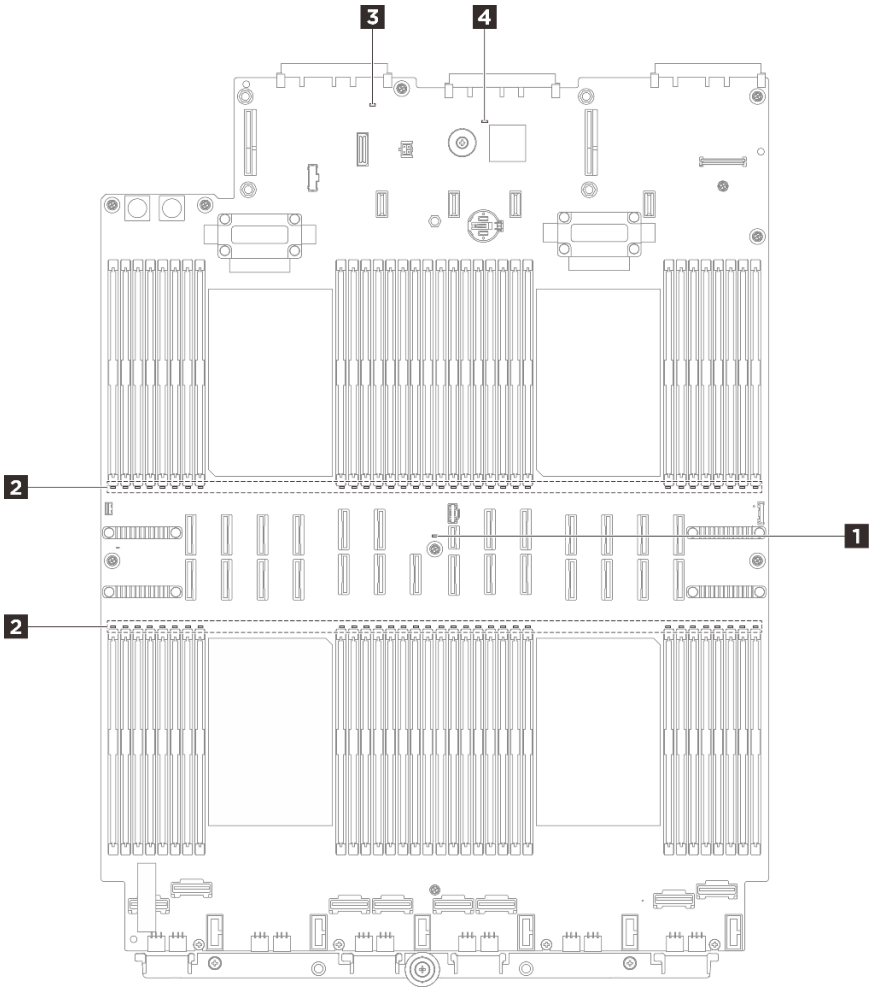

Figure 327. Processor board LEDs

Table 21. Processor board LEDs

LED	Description	Action
1 System error LED (yellow)	When this yellow LED is lit, another one or more LEDs in the server might also be lit to direct you to the error source.	Check system logs or internal error LEDs to identify the failed part. For more information, see "Front-operator-panel LEDs and buttons" on page 404.
2 DIMM error LEDs (amber)	When a memory module error LED is lit, it indicates that the corresponding memory module has failed.	For more information, see "Memory problems" on page 422.
3 System status LED (green)	The system status LED indicates the working status of the system. • Fast blinking (about four flashes per second): Power fault or is waiting for XCC power permission ready. • Slow blinking (about one flash per second): Power off and is ready to be powered on (standby state). • On: Power on.	• If the system status LED is blinking fast over 5 minutes and cannot power on, check the Table 22 "XCC heartbeat LED" on page 409. • If the system status LED remains off or is blinking fast (about four flashes per second) and the system error LED on the front panel is on (yellow), the system is in a power fault status. Do the following: 1. Re-plug the power cord. 2. Remove installed adapters/devices, one at a time, until you reach the minimal configuration for debugging. 3. (Trained technicians only) If the problem remains, capture FFDC log, and replace the processor board. 4. If the problem still remains, contact Lenovo Support.
4 FPGA heartbeat LED (green)	The FPGA heartbeat LED helps you identify the FPGA status. • Blinking (about one flash per second): FPGA is working normally. • On or off: FPGA is not working.	If FPGA heartbeat LED is always off or always on, do the following: 1. Replace the processor board. 2. If the problem remains, contact Lenovo Support.

System I/O board LEDs

The following illustrations show the light-emitting diodes (LEDs) on the system I/O board, also known as Datacenter Secure Control Module (DC-SCM).

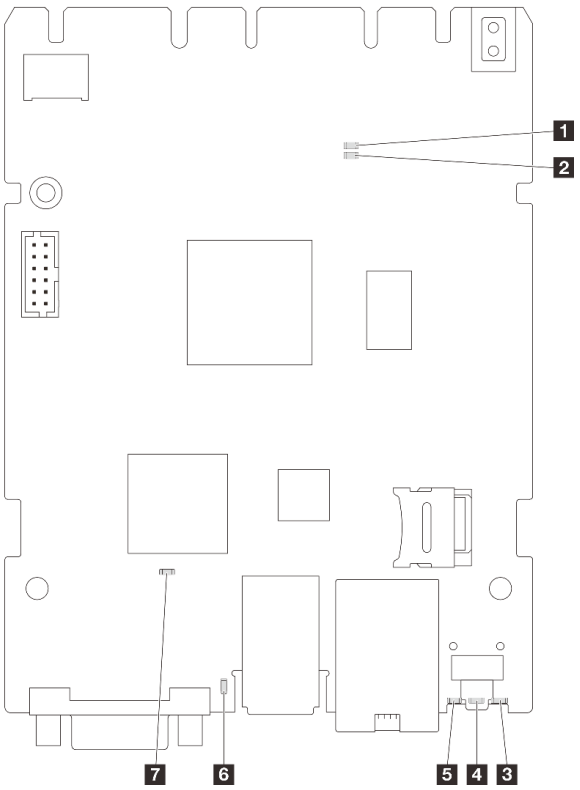

Figure 328. LEDs on the system I/O board (DC-SCM)

1 AP0 LED (green)

2 AP1 LED (green)

3 RoT fault LED (yellow)

4 System error LED (yellow)

5 System ID LED (blue)

6 XCC heartbeat LED (green)

7 SCM FPGA heartbeat LED (green)

Table 22. LEDs description

Scenario	1 AP0 LED	2 AP1 LED	3 RoT fault LED	6 XCC heart-beat LED	7 SCM FPGA heart-beat LED	Actions
RoT security module fatal firmware failure	Off	Off	On	N/A	N/A	Replace the system I/O board.
	Blink	N/A	On	N/A	N/A	Replace the system I/O board.
No system power (FPGA heartbeat LED off)	Off	Off	Off	Off	Off	If the AC power is on, but the system board assembly does not have power, then: 1. Check the power supply unit (PSU) or power interposer board (PIB) if any. If the PSU or PIB has any error, replace it. 2. If the PSU or PIB is good, do the following: a. Replace the system I/O board. b. Replace the processor board.

Table 22. LEDs description (continued)

Scenario	1 AP0 LED	2 AP1 LED	3 RoT fault LED	6 XCC heart-beat LED	7 SCM FPGA heart-beat LED	Actions
XCC firmware recoverable error	Blink	N/A	Off	N/A	N/A	Information only. No action is required.
XCC firmware is recovered from error	Blink	N/A	Off	N/A	N/A	Information only. No action is required.
UEFI firmware authentication failure	N/A	Blink	Off	N/A	N/A	Information only. No action is required.
UEFI firmware is recovered from authentication failure	N/A	On	Off	N/A	N/A	Information only. No action is required.
System is OK (FPGA heartbeat LED is On)	On	On	Off	Blink (1 Hz)	On	Information only. No action is required.

4 System error LED (yellow)	
Description	When this yellow LED is lit, another one or more LEDs in the server might also be lit to direct you to the error source.
Action	Check system logs or internal error LEDs to identify the failed part. For more information, see “Front-operator-panel LEDs and buttons” on page 404.

5 System ID LED (blue)	
Description	The front system ID LED helps you locate the server.
Action	Each time you press the system ID button, the state of both system ID LEDs changes, and the state can be on, blinking, or off.

6 XCC heartbeat LED (green)	
Description	The XCC heartbeat LED helps you identify the XCC status. • Blinking (1 Hz, about one flash per second) : XCC is working normally. • Blinking at other speeds or always on: XCC is at the initial phase or is working abnormally. • Off: XCC is not working.
Action	• If the XCC heartbeat LED is always off or always on, do the following: – If XCC cannot be accessed: 1. Re-plug the power cord. 2. Check and ensure that the system I/O board is installed correctly. (Trained technicians only) Reinstall it if needed. 3. (Trained technicians only) Replace the system I/O board. – If XCC can be accessed, replace the system I/O board. • If the XCC heartbeat LED is always blinking fast over 5 minutes, do the following: 1. Re-plug the power cord. 2. Check and ensure that the system I/O board is installed correctly. (Trained technicians only) Reinstall it if needed. 3. (Trained technicians only) Replace the system I/O board. • If the XCC heartbeat LED is always blinking slow over 5 minutes, do the following: 1. Re-plug the power cord. 2. Check and ensure that the system I/O board is installed correctly. (Trained technicians only) Reinstall it if needed. 3. If the problem remains, contact Lenovo Support.

Power supply LEDs

This topic provides information about various power supply LED status and corresponding action suggestions.

The following minimal configuration is required for the server to start:

- Two processors in processor socket 1 and 2
- Two DRAM DIMMs in slot 10 and 26
- Two power supplies
- One 2.5-inch drive or E3.S drive, or one M.2 drive (if OS is needed for debugging)
- Six system fan modules

LEDs on a CRPS Premium power supply

The following figure and table describe the LEDs on a CRPS Premium power supply.

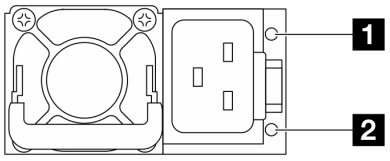

Figure 329. LEDs on a CRPS Premium *power supply*

LED	Description
1 Output and fault status (bi-color, green and yellow)	The output and fault status LED can be in one of the following states: • Off: The server is powered off, or the power supply unit is not working properly. If the server is powered on but the LED is off, replace the power supply unit. • Slow blinking green (about one flash per second): The power supply is in zero-output mode (standby). When the server power load is low, one of the installed power supplies enters into the standby state while the other one delivers entire load. When the power load increases, the standby power supply will switch to active state to provide sufficient power to the server. • Fast blinking green (about five flashes per second): The power supply unit is in firmware update mode. • Green: The server is on and the power supply unit is working normally. • Yellow: The power supply unit may have failed. Dump the FFDC log from the system and contact Lenovo back-end support team for PSU data log reviewing. Zero-output mode can be disabled via Setup Utility or Lenovo XClarity Controller web interface. If you disable zero-output mode, both power supplies will be in the active state. • Start the Setup utility, go to **System Settings → Power → Zero Output** and select **Disable**. If you disable zero-output mode, both power supplies will be in the active state. • Log in to the Lenovo XClarity Controller web interface, choose **Server Configuration → Power Policy**, disable **Zero Output Mode**, and then click **Apply**.
2 Input status (single color, green)	The input status LED can be in one of the following states: • Off: The power supply unit is disconnected from the input power source. • Green: The power supply unit is connected to the input power source. • Blinking (1Hz): The input power is unhealthy.

LEDs on a CRPS power supply

The following figures and table describe the LEDs on a CRPS power supply.

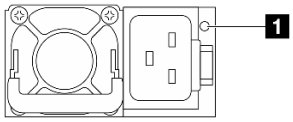

Figure 330. LED on a CRPS PSU (1)

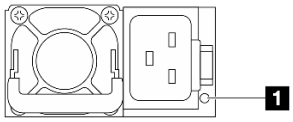

Figure 331. LED on a CRPS PSU (2)

1 Power-supply-unit LED (bi-color, green and yellow)	
Status	**Description**
On (green)	The server is on and the power supply unit is working normally.
Blinking (green, about two flashes per second)	The power supply unit is in firmware updating mode.
On (yellow)	When the power supply unit is lit yellow: • Scenario 1: One of the two power supply units has powered off or is unplugged from the power cord, and at the same time, the other one has power on. • Scenario 2: The power supply unit has failed due to one of the issues listed below: – Over-temperature protection (OTP) – Over-current protection (OCP) – Over-voltage protection (OVP) – Short circuit protection (SCP) – Fan failure

1 Power-supply-unit LED (bi-color, green and yellow)	
Status	**Description**
Blinking (yellow, about one flash per second)	The power supply unit is showing warnings, indicating over-temperature warning (OTW), over-current warning (OCW), or a slow fan speed.
Off	The server is powered off, or the power supply unit is not working properly. If the server is powered on but the LED is off, replace the power supply unit.

Rear M.2 LEDs

This topic provides troubleshooting information for the M.2 drive assembly.

- "LEDs on the rear M.2 interposer" on page 413
- "LEDs on the rear M.2 boot adapter" on page 413

LEDs on the rear M.2 interposer

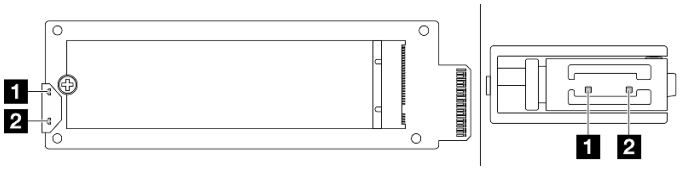

Figure 332. Rear M.2 interposer LEDs

LED	Status and description
1 Activity LED (green)	On: The M.2 drive is idle.
	Off: The M.2 drive appears de-asserted.
	Blinking (about four flashes per second): The I/O activity of the M.2 drive is in progress.
2 Status LED (yellow)	On: A drive fault occurs.
	Off: The M.2 drive is working normally.
	Fast blinking (about four flashes per second): The M.2 drive is being located.
	Slow blinking (about one flash per second): The M.2 drive is being rebuilt.

LEDs on the rear M.2 boot adapter

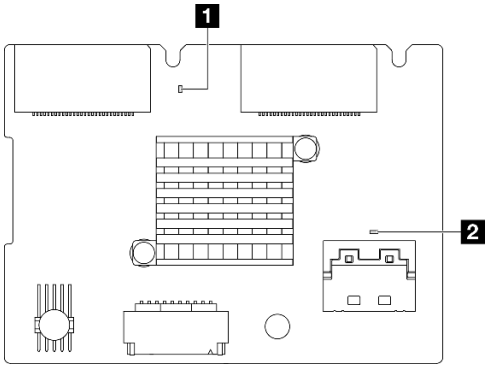

Figure 333. Rear M.2 boot adapter LEDs

LED	Status and description
1 System heartbeat LED (green)	Blinking: Power on and the RAID firmware is working normally.
	Off: Power off or the RAID firmware is working abnormally.
2 PSoC heartbeat LED (green)	On: The PSoC firmware is working abnormally.
	Off: Power off or the PSoC firmware is working abnormally.
	Fast blinking (about one flash per second): Updating code (bootloader mode).
	Slow blinking (about one flash every two seconds): Exiting initialization (application mode). The PSoC firmware is working normally.

XCC system management port LEDs

This topic provides information on LEDs of XCC system management port.

The following table describes the problems that are indicated by LEDs on XCC system management port.

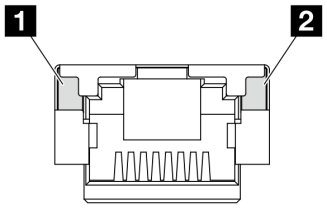

Figure 334. LEDs on the XCC system management port

Table 23. XCC system management port LEDs

LED	Description
1 XCC system management port (1GB RJ-45) Ethernet port link LED	Use this green LED to distinguish the network connectivity status: • Off: The network link is disconnected. • Green: The network link is established.
2 XCC system management port (1 GB RJ-45) Ethernet port activity LED	Use this green LED to distinguish the network activity status: • Off: The server is disconnected from a LAN. • Green: The network is connected and active.

General problem determination procedures

Use the information in this section to resolve problems if the event log does not contain specific errors or the server is inoperative.

If you are not sure about the cause of a problem and the power supplies are working correctly, complete the following steps to attempt to resolve the problem:

1. Power off the server.
2. Make sure that the server is cabled correctly.

3. Remove or disconnect the following devices if applicable, one at a time, until you find the failure. Power on and configure the server each time you remove or disconnect a device.
   - Any external devices.
   - Surge-suppressor device (on the server).
   - Printer, mouse, and non-Lenovo devices.
   - Each adapter.
   - Hard disk drives.
   - Memory modules until you reach the minimal configuration for debugging that is supported for the server.

     To determine the minimal configuration for your server, see “Minimal configuration for debugging” in “Technical specifications” on page 3.
4. Power on the server.

If the problem is solved when you remove an adapter from the server, but the problem recurs when you install the same adapter again, suspect the adapter. If the problem recurs when you replace the adapter with a different one, try a different PCIe slot.

If the problem appears to be a networking problem and the server passes all system tests, suspect a network cabling problem that is external to the server.

Resolving suspected power problems

Power problems can be difficult to solve. For example, a short circuit can exist anywhere on any of the power distribution buses. Usually, a short circuit will cause the power subsystem to shut down because of an overcurrent condition.

Complete the following steps to diagnose and resolve a suspected power problem.

Step 1. Check the event log and resolve any errors related to the power.

Note: Start with the event log of the application that is managing the server. For more information about event logs, see “Event logs” on page 395.

Step 2. Check for short circuits, for example, if a loose screw is causing a short circuit on a circuit board.

Step 3. Remove the adapters and disconnect the cables and power cords to all internal and external devices until the server is at the minimal configuration for debugging that is required for the server to start. To determine the minimal configuration for your server, see “Minimal configuration for debugging” in “Technical specifications” on page 3.

Step 4. Reconnect all AC power cords and turn on the server. If the server starts successfully, reseat the adapters and devices one at a time until the problem is isolated.

If the server does not start from the minimal configuration, replace the components in the minimal configuration one at a time until the problem is isolated.

Resolving suspected Ethernet controller problems

The method that you use to test the Ethernet controller depends on which operating system you are using. See the operating-system documentation for information about Ethernet controllers, and see the Ethernet controller device-driver readme file.

Complete the following steps to attempt to resolve suspected problems with the Ethernet controller.

Step 1. Make sure that the correct device drivers, which come with the server are installed and that they are at the latest level.

Step 2. Make sure that the Ethernet cable is installed correctly.

- The cable must be securely attached at all connections. If the cable is attached but the problem remains, try a different cable.
- Make sure that the cable rating is applicable for the network speed selected. For example, an SFP+ cable is only suitable for 10G operation. An SFP25 cable is needed for 25G operation. Likewise for Base-T operation, a CAT5 cable is required for 1G Base-T operation while a CAT6 cable is required for 10G Base-T operation.

Step 3. Set both the adapter port and the switch port to auto-negotiation. If auto-negotiation is not supported on one of the ports, try configuring both ports manually to match each other.

Step 4. Check the Ethernet controller LEDs on the server. These LEDs indicate whether there is a problem with the connector, cable, or hub.

Although some adapters may vary, when installed vertically the adapter link LED is typically on the left of the port and the activity LED is typically on the right.

The server front panel LED is described in "Troubleshooting by system LEDs and diagnostics display" on page 397.

- The Ethernet link status LED is lit when the Ethernet controller receives a link indication from the switch. If the LED is off, there might be a defective connector or cable or a problem with the switch.
- The Ethernet transmit/receive activity LED is lit when the Ethernet controller sends or receives data over the Ethernet network. If the Ethernet transmit/receive activity is off, make sure that the hub and network are operating and that the correct device drivers are installed.

Step 5. Check the Network activity LED on the server. The Network activity LED is lit when data is active on the Ethernet network. If the Network activity LED is off, make sure that the hub and network are operating and that the correct device drivers are installed.

Network activity LED location is specified in "Troubleshooting by system LEDs and diagnostics display" on page 397.

Step 6. Check for operating-system-specific causes of the problem, and also make sure that the operating system drivers are installed correctly.

Step 7. Make sure that the device drivers on the client and server are using the same protocol.

If the Ethernet controller still cannot connect to the network but the hardware appears to be working, the network administrator must investigate other possible causes of the error.

Troubleshooting by symptom

Use this information to find solutions to problems that have identifiable symptoms.

To use the symptom-based troubleshooting information in this section, complete the following steps:

1. Check the event log of the application that is managing the server and follow the suggested actions to resolve any event codes.
   - If you are managing the server from the Lenovo XClarity Administrator, begin with the Lenovo XClarity Administrator event log.
   - If you are using some other management application, begin with the Lenovo XClarity Controller event log.

   For more information about event logs (see "Event logs" on page 395).
2. Review this section to find the symptoms that you are experiencing and follow the suggested actions to resolve the issue.

3. If the problem persists, contact support (see “Contacting Support” on page 443).

Liquid cooling module problems

Use this information to resolve problems with the Processor Neptune® Core Module.

- “Liquid leak problem” on page 417
- “Cable break problem” on page 419

Liquid leak problem

Liquid leaks can be identified through the following methods:

- If the server is on remote maintenance, use the methods below to check the liquid leakage status.
  - A Lenovo XClarity Controller event shows:

    FQXSPCA0040N: Liquid is leaking from open loop [CoolingSensorName].

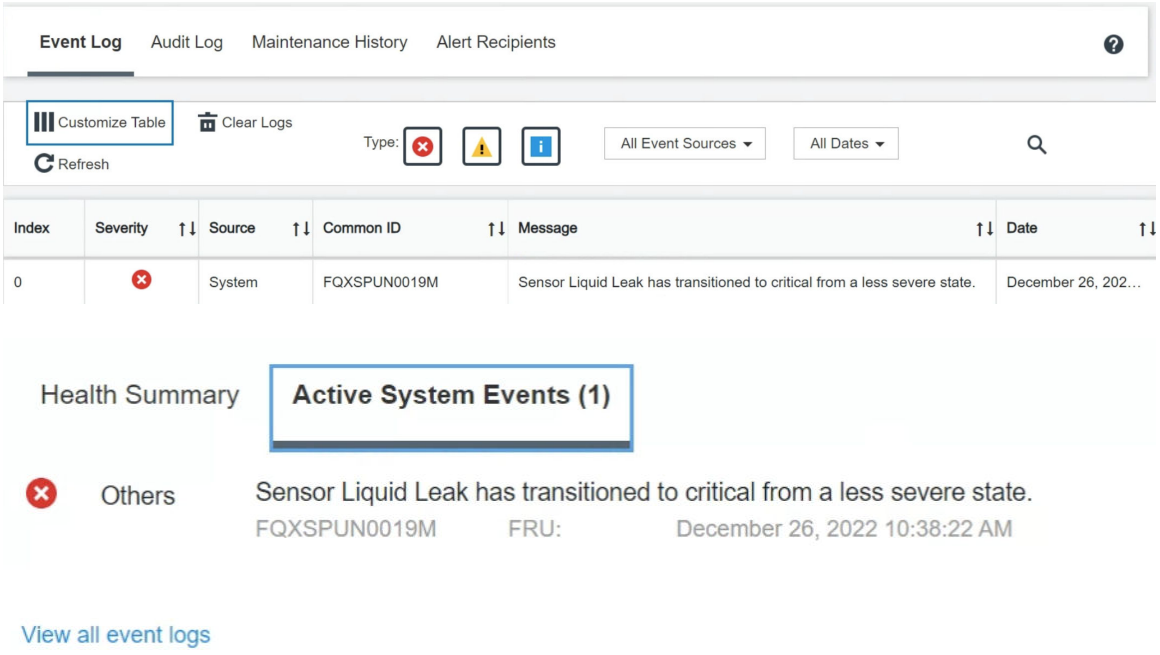

  - Lenovo XClarity Controller has defined lots of system conditions as IPMI sensors. Users can use IPMI commands to check system running status. Here are examples of executing ipmitool, an open-source common tool which follows Intel’s IPMI standard. Check for liquid leakage status with command lines as shown.
    -
```
sysadmin@Dev-Server:~$ ipmitool -C 17 -I lanplus -H 10.132.225.164 -U USERID -P  ********  sel elist
   1 | 12/26/2022 | 10:38:17 | Event Logging Disabled SEL Fullness | Log area reset/cleared | Asserted
   2 | 12/26/2022 | 10:38:22 | Cooling Device Liquid Leak | Transition to Critical from less severe | Asserted
```

      The event logs shown with the parameter `sel elist`.
    -
```
sysadmin@Dev-Server:~$ ipmitool -C 17 -I lanplus -H 10.132.225.164 -U USERID -P  ********  sdr elist |grep "Liquid Leak"
Liquid Leak      | EAh | ok  | 30.1 | Transition to Critical from less severe
```

      `Liquid Leak | EAh | ok | 30.1 | Transition to Critical from less severe`

      The status of all sensors can be fetched with the parameter `sdr elist`. If liquid leakage happens, the log above will show up.

- If the server is within reach, and the amber LED is lit on the front operator panel, potential liquid leaks may have occurred. It is required to open the top cover to check the LED status of the leakage detection sensor module. See “Front-operator-panel LEDs and buttons” on page 404 and “Leakage detection sensor module LED” on page 406 for more details.

Steps to resolve liquid leaks

If the LED on the leakage detection sensor module is blinking green, follow the procedures to get help.

1. Save and back up data and operations.
2. Power off the server and remove the quick connect plugs from the manifolds.
3. Slide the server out or remove the server from the rack. See “Server replacement” on page 67.
4. Remove the front and rear top covers. See “Remove the front top cover” on page 369 and “Remove the rear top cover” on page 371.
5. Check for liquid leaks around the outlet and inlet hoses, system board assembly, and under the cold plate covers:

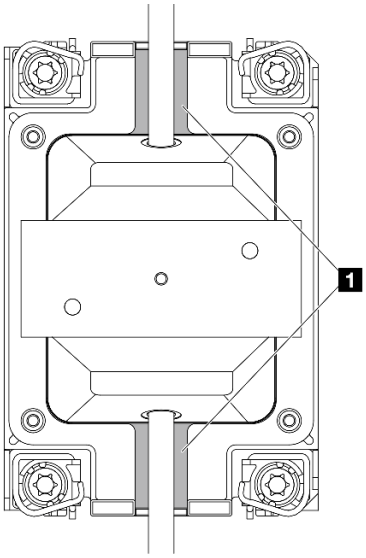

Figure 335. Leak-prone areas

Note: If leak happens, the liquid tends to collect around 1 leak-prone areas.

a. If liquid is found around the hoses and system board assembly, clean up the liquid.
b. If liquid is found under the cold plate covers, remove the cold plate covers and clean up the liquid on the cold plates.

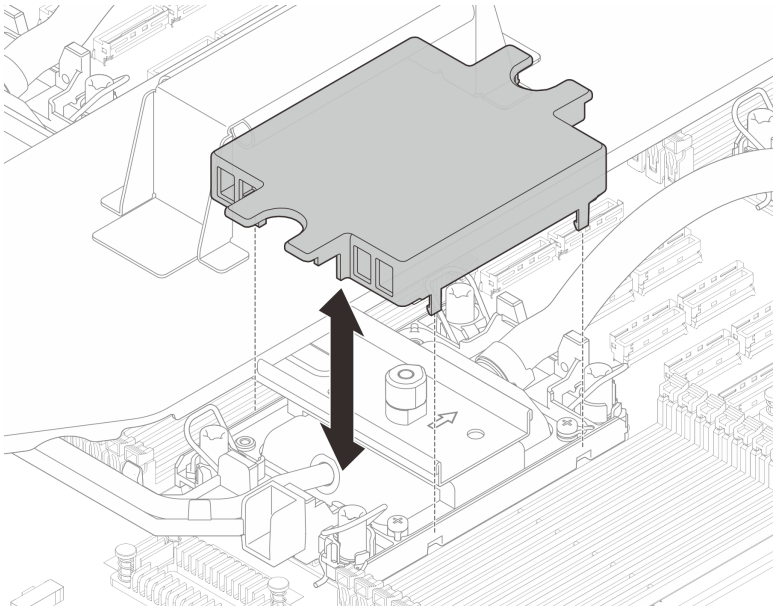

Figure 336. Removing the cold plate cover

6. Check the top cover of the server below to see if dripping happens. If yes, repeat previous steps to servers below.
7. Contact Lenovo Support.

Cable break problem

A Lenovo XClarity Controller event shows:

FQXSPCA0042M: Liquid leak detector for [DeviceType] is faulty.

Steps to resolve cable break

1. Check if there is a de-assert event (FQXSPCA2042I) triggered.
2. If yes, ignore this event.
3. If not, contact Lenovo Support for detail checking.

Intermittent problems

Use this information to solve intermittent problems.

- "Intermittent external device problems" on page 419
- "Intermittent KVM problems" on page 420
- "Intermittent unexpected reboots" on page 420

Intermittent external device problems

Complete the following steps until the problem is solved.

1. Update the UEFI and XCC firmware to the latest versions.
2. Make sure that the correct device drivers are installed. See the manufacturer's website for documentation.
3. For a USB device:
   a. Make sure that the device is configured correctly.

Restart the server and press the key according to the on-screen instructions to display the LXPM system setup interface. (For more information, see the “Startup” section in the LXPM documentation compatible with your server at https://pubs.lenovo.com/lxpm-overview/.) Then, click **System Settings → Devices and I/O Ports → USB Configuration**.

b. Connect the device to another port. If using a USB hub, remove the hub and connect the device directly to the server. Make sure that the device is configured correctly for the port.

Intermittent KVM problems

Complete the following steps until the problem is solved.

Video problems:

1. Make sure that all cables and the console breakout cable are properly connected and secure.
2. Make sure that the monitor is working properly by testing it on another server.
3. Test the console breakout cable on a working server to ensure that it is operating properly. Replace the console breakout cable if it is defective.

Keyboard problems:

Make sure that all cables and the console breakout cable are properly connected and secure.

Mouse problems:

Make sure that all cables and the console breakout cable are properly connected and secure.

Intermittent unexpected reboots

Note: Some uncorrectable errors require that the server reboot so that it can disable a device, such as a memory DIMM or a processor to allow the machine to boot up properly.

1. If the reset occurs during POST and the POST watchdog timer is enabled, make sure that sufficient time is allowed in the watchdog timeout value (POST Watchdog Timer).

   To check the POST watchdog time, restart the server and press the key according to the on-screen instructions to display the LXPM system setup interface. (For more information, see the “Startup” section in the LXPM documentation compatible with your server at https://pubs.lenovo.com/lxpm-overview/.) Then, click **BMC Settings → POST Watchdog Timer**.

2. If the reset occurs after the operating system starts, do one of the followings:
   - Enter the operating system when the system operates normally and set up operating system kernel dump process (Windows and Linux base operating systems will be using different method). Enter the UEFI setup menus and disable the feature, or disable it with the following OneCli command.
     `OneCli.exe config set SystemRecovery.RebootSystemOnNMI Disable --bmc XCC_USER:XCC_PASSWORD@XCC_IPAddress`
   - Disable any automatic server restart (ASR) utilities, such as the Automatic Server Restart IPMI Application for Windows, or any ASR devices that are installed.
3. See the management controller event log to check for an event code that indicates a reboot. See “Event logs” on page 395 for information about viewing the event log. If you are using Linux base operating system, then capture all logs back to Lenovo support for further investigation.

Keyboard, mouse, KVM switch or USB-device problems

Use this information to solve problems related to a keyboard, mouse, KVM switch or USB-device problems.

- “All or some keys on the keyboard do not work” on page 421
- “Mouse does not work” on page 421

- “KVM switch problems” on page 421
- “USB-device does not work” on page 421

All or some keys on the keyboard do not work

1. Make sure that:
   - The keyboard cable is securely connected.
   - The server and the monitor are turned on.
2. If you are using a USB keyboard, run the Setup utility and enable keyboardless operation.
3. If you are using a USB keyboard and it is connected to a USB hub, disconnect the keyboard from the hub and connect it directly to the server.
4. Replace the keyboard.

Mouse does not work

1. Make sure that:
   - The mouse cable is securely connected to the server.
   - The mouse device drivers are installed correctly.
   - The server and the monitor are turned on.
   - The mouse option is enabled in the Setup utility.
2. If you are using a USB mouse and it is connected to a USB hub, disconnect the mouse from the hub and connect it directly to the server.
3. Replace the mouse.

KVM switch problems

1. Make sure that the KVM switch is supported by your server.
2. Make sure that the KVM switch is powered on correctly.
3. If the keyboard, mouse or monitor can be operated normally with direct connection to the server, then replace the KVM switch.

USB-device does not work

1. Make sure that:
   - The correct USB device driver is installed.
   - The operating system supports USB devices.
2. Make sure that the USB configuration options are set correctly in system setup.

   Restart the server and press the key according to the on-screen instructions to display the LXPM system setup interface. (For more information, see the “Startup” section in the LXPM documentation compatible with your server at https://pubs.lenovo.com/lxpm-overview/.) Then, click **System Settings → Devices and I/O Ports → USB Configuration**.
3. If you are using a USB hub, disconnect the USB device from the hub and connect it directly to the server.

Hot-swap M.2 drive problems

See this section to solve problems related to a hot-swap M.2 drive.

- “A hot-swap M.2 drive is de-asserted” on page 422
- “XCC event log shows PCIe errors concerning M.2 drive” on page 422

Note: For M.2 LED status and description, see “Rear M.2 LEDs” on page 413.

A hot-swap M.2 drive is de-asserted

Complete the following steps until the problem is solved:

1. Swap the faulty M.2 drive assembly with a functional one.
   - If the problem persists in the original fault location (now occupied by the functional drive assembly), it indicates that the M.2 boot adapter may be faulty. In this case, replace the M.2 boot adapter.
   - If the problem persists on the originally faulty M.2 drive assembly, it indicates that the M.2 drive or M.2 interposer may be faulty. In this case, go to the next step to continue troubleshooting.
2. Swap the M.2 drive on the faulty M.2 drive assembly with a functional one.
   - If the problem is solved, it indicates that the M.2 drive may be defective and should be replaced.
   - If the problem persists, it indicates that the M.2 interposer may be defective and should be replaced.
3. If the problem persists, record M.2 LED status, collect the FFDC file, and contact Lenovo Support.

XCC event log shows PCIe errors concerning M.2 drive

Complete the following steps until the problem is solved:

1. Update the PSoC firmware and RAID firmware.
2. If the problem persists after firmware update, replace the M.2 boot adapter.
3. If the problem persists after replacing, record M.2 LED status, collect the FFDC file, and contact Lenovo Support.

Memory problems

See this section to resolve issues related to memory.

Memory modules identified as failed

Note: Each time you install or remove a memory module, you must disconnect the server from the power source; then, wait 10 seconds before restarting the server.

Complete the following procedure to solve the problem.

1. Check and make sure the DIMM slots are intact and there is no dust or foreign objects in the DIMM slots.
2. See “Memory module installation rules and order” on page 48 to make sure the present memory module population sequence is supported. An unsupported memory module population sequence may cause certain memory modules to be disabled. Correcting the population and rebooting the system can resolve such issues.
3. Swap the positions of the failed memory module and a functional one, and then restart the system to observe whether the error persists.
   - If the error continues to occur on the originally failed memory module, this strongly suggests that the module itself is defective and should be replaced.
   - If the error appears in the original error location (now occupied by the functional module), the issue is likely unrelated to the memory modules and may instead stem from the processor or processor board. Continue the following step for further troubleshooting.
4. Swap the faulty processor (associated with memory errors) with a functional processor to determine whether the memory module issue is processor-related.
   - If the error persists in the original error location after swapping processors, this indicates a processor board-related issue. Please contact a professional technician to conduct further inspection of the processor board.

- If the error follows the originally faulty processor after the swap, the problem is likely processor-related, and replacing the processor should resolve the issue.

Monitor and video problems

Use this information to solve problems related to a monitor or video.

- "Incorrect characters are displayed" on page 423
- "Screen is blank" on page 423
- "Screen goes blank when you start some application programs" on page 423
- "The monitor has screen jitter, or the screen image is wavy, unreadable, rolling, or distorted" on page 423
- "The wrong characters appear on the screen" on page 424

Incorrect characters are displayed

Complete the following steps:

1. Verify that the language and locality settings are correct for the keyboard and operating system.
2. If the wrong language is displayed, update the server firmware to the latest level. See "Update the firmware" on page 386.

Screen is blank

1. If the server is attached to a KVM switch, bypass the KVM switch to eliminate it as a possible cause of the problem: connect the monitor cable directly to the correct connector on the rear of the server.
2. The management controller remote presence function is disabled if you install an optional video adapter. To use the management controller remote presence function, remove the optional video adapter.
3. If the server is installed with the graphical adapters while turning on the server, the Lenovo logo is displayed on the screen after approximately 3 minutes. This is normal operation while the system loads.
4. Make sure that:
   - The server is turned on and there is power supplied to the server.
   - The monitor cables are connected correctly.
   - The monitor is turned on and the brightness and contrast controls are adjusted correctly.
5. Make sure that the correct server is controlling the monitor, if applicable.
6. Make sure that the video output is not affected by corrupted server firmware; See "Update the firmware" on page 386.
7. If the problem remains, contact Lenovo Support.

Screen goes blank when you start some application programs

1. Make sure that:
   - The application program is not setting a display mode that is higher than the capability of the monitor.
   - You installed the necessary device drivers for the application.

The monitor has screen jitter, or the screen image is wavy, unreadable, rolling, or distorted

1. If the monitor self-tests show that the monitor is working correctly, consider the location of the monitor. Magnetic fields around other devices (such as transformers, appliances, fluorescents, and other monitors) can cause screen jitter or wavy, unreadable, rolling, or distorted screen images. If this happens, turn off the monitor.

   Attention: Moving a color monitor while it is turned on might cause screen discoloration.

   Move the device and the monitor at least 305 mm (12 in.) apart, and turn on the monitor.

Notes:

a. To prevent diskette drive read/write errors, make sure that the distance between the monitor and any external diskette drive is at least 76 mm (3 in.).

b. Non-Lenovo monitor cables might cause unpredictable problems.

2. Reseat the monitor cable.
3. Replace the components listed in step 2 one at a time, in the order shown, restarting the server each time:
   a. Monitor cable
   b. Video adapter (if one is installed)
   c. Monitor
   d. (Trained technicians only) System board.

The wrong characters appear on the screen

Complete the following steps until the problem is solved:

1. Verify that the language and locality settings are correct for the keyboard and operating system.
2. If the wrong language is displayed, update the server firmware to the latest level. See "Update the firmware" on page 386.

Network problems

Use this information to resolve issues related to networking.

- "Cannot wake server using Wake on LAN" on page 424
- "Could not log in using LDAP account with SSL enabled" on page 424

Cannot wake server using Wake on LAN

Complete the following steps until the problem is resolved:

1. If you are using the dual-port network adapter and the server is connected to the network using Ethernet 5 connector, check the system-error log or IMM2 system event log (see "Event logs" on page 395), make sure:
   a. Fan 3 is running in standby mode, if Emulex dual port 10GBase-T embedded adapter is installed.
   b. The room temperature is not too high (see "Specifications" on page 3).
   c. The air vents are not blocked.
   d. The air baffle is installed securely.
2. Reseat the dual-port network adapter.
3. Turn off the server and disconnect it from the power source; then, wait 10 seconds before restarting the server.
4. If the problem still remains, replace the dual-port network adapter.

Could not log in using LDAP account with SSL enabled

Complete the following steps until the problem is resolved:

1. Make sure that the license key is valid.
2. Generate a new license key and log in again.

Observable problems

Use this information to solve observable problems.

- “The server immediately displays the POST Event Viewer when it is turned on” on page 425
- “Server is unresponsive (POST is complete and operating system is running)” on page 425
- “Server is unresponsive (POST failed and cannot start System Setup)” on page 426
- “Voltage planar fault is displayed in the event log” on page 426
- “Unusual smell” on page 426
- “Server seems to be running hot” on page 426
- “Cracked parts or cracked chassis” on page 427

The server immediately displays the POST Event Viewer when it is turned on

Complete the following steps until the problem is solved.

1. Correct any errors that are indicated by the system LEDs and diagnostics display.
2. Make sure that the server supports all the processors and that the processors match in speed and cache size.

   You can view processor details from system setup.

   To determine if the processor is supported for the server, see https://serverproven.lenovo.com.
3. (Trained technicians only) Make sure that processor 1 is seated correctly.
4. (Trained technicians only) Remove processor 2 and restart the server.
5. Replace the following components one at a time, in the order shown, restarting the server each time:
   a. (Trained technicians only) Processor
   b. (Trained technicians only) System board

Server is unresponsive (POST is complete and operating system is running)

Complete the following steps until the problem is solved.

- If you are in the same location as the server, complete the following steps:
  1. If you are using a KVM connection, make sure that the connection is operating correctly. Otherwise, make sure that the keyboard and mouse are operating correctly.
  2. If possible, log in to the server and verify that all applications are running (no applications are hung).
  3. Restart the server.
  4. If the problem remains, make sure that any new software has been installed and configured correctly.
  5. Contact your place of purchase of the software or your software provider.
- If you are accessing the server from a remote location, complete the following steps:
  1. Make sure that all applications are running (no applications are hung).
  2. Attempt to log out of the system and log back in.
  3. Validate the network access by pinging or running a trace route to the server from a command line.
     a. If you are unable to get a response during a ping test, attempt to ping another server in the enclosure to determine whether it is a connection problem or server problem.
     b. Run a trace route to determine where the connection breaks down. Attempt to resolve a connection issue with either the VPN or the point at which the connection breaks down.
  4. Restart the server remotely through the management interface.
  5. If the problem remains, verify that any new software has been installed and configured correctly.
  6. Contact your place of purchase of the software or your software provider.

Server is unresponsive (POST failed and cannot start System Setup)

Configuration changes, such as added devices or adapter firmware updates, and firmware or application code problems can cause the server to fail POST (the power-on self-test).

If this occurs, the server responds in either of the following ways:

- The server restarts automatically and attempts POST again.
- The server hangs, and you must manually restart the server for the server to attempt POST again.

After a specified number of consecutive attempts (automatic or manual), the server reverts to the default UEFI configuration and starts System Setup so that you can make the necessary corrections to the configuration and restart the server. If the server is unable to successfully complete POST with the default configuration, there might be a problem with the system board.

You can specify the number of consecutive restart attempts in System Setup. Restart the server and press the key according to the on-screen instructions to display the LXPM system setup interface. For more information, see the "Startup" section in the LXPM documentation compatible with your server at https://pubs.lenovo.com/lxpm-overview/. Then, click **System Settings → Recovery and RAS → POST Attempts → POST Attempts Limit**. Available options are 3, 6, 9, and disable.

Voltage planar fault is displayed in the event log

Complete the following steps until the problem is solved.

1. Revert the system to the minimum configuration. See "Specifications" on page 3 for the minimally required number of processors and DIMMs.
2. Restart the system.
   - If the system restarts, add each of the removed items one at a time and restart the system each time until the error occurs. Replace the item for which the error occurs.
   - If the system does not restart, suspect the system board.

Unusual smell

Complete the following steps until the problem is solved.

1. An unusual smell might be coming from newly installed equipment.
2. If the problem remains, contact Lenovo Support.

Server seems to be running hot

Complete the following steps until the problem is solved.

Multiple servers or chassis:

1. Make sure that the room temperature is within the specified range (see "Specifications" on page 3).
2. Make sure that the fans are installed correctly.
3. Update the UEFI and XCC to the latest versions.
4. Make sure that the fillers in the server are installed correctly (see Chapter 5 "Hardware replacement procedures" on page 45 for detailed installation procedures).
5. Use the IPMI command to ramp up the fan speed to the full fan speed to see whether the issue can be resolved.

   Note: The IPMI raw command should only be used by trained technicians and each system has its own specific IPMI raw command.

6. Check the management processor event log for rising temperature events. If there are no events, the server is running within normal operating temperatures. Note that you can expect some variation in temperature.

Cracked parts or cracked chassis

Contact Lenovo Support.

Optional-device problems

Use this information to solve problems related to optional devices.

- "External USB device is not recognized" on page 427
- "PCIe adapter is not recognized or is not functioning" on page 427
- "Insufficient PCIe resources are detected." on page 427
- "A Lenovo optional device that was just installed does not work." on page 428
- "A Lenovo optional device that worked previously does not work now" on page 428

External USB device is not recognized

Complete the following steps until the problem is resolved:

1. Update the UEFI firmware to the latest version.
2. Make sure that the proper drivers are installed on the compute node. See the product documentation for the USB device for information about device drivers.
3. Use the Setup utility to make sure that the device is configured correctly.
4. If the USB device is plugged into a hub or the console breakout cable, unplug the device and plug it directly into the USB port on the front of the server.

PCIe adapter is not recognized or is not functioning

Complete the following steps until the problem is resolved:

1. Update the UEFI firmware to the latest version.
2. Check the event log and resolve any issues related to the device.
3. Validate that the device is supported for the server (see https://serverproven.lenovo.com). Make sure that the firmware level on the device is at the latest supported level and update the firmware if applicable.
4. Make sure that the adapter is installed in a correct slot.
5. Make sure that the proper device drivers are installed for the device.
6. Check http://datacentersupport.lenovo.com for any tech tips (also known as retain tips or service bulletins) that might be related to the adapter.
7. Ensure any adapter external connections are correct and that the connectors are not physically damaged.
8. Make sure that the PCIe adapter is installed with the supported operating system.

Insufficient PCIe resources are detected.

If you see an error message stating "Insufficient PCI Resources Detected," complete the following steps until the problem is resolved:

1. Press Enter to access System Setup Utility.
2. Select **System Settings → Devices and I/O Ports → MM Config Base**; then, modify the setting to increase the device resources. For example, modify 3 GB to 2 GB or modify 2 GB to 1 GB.
3. Save the settings and restart the system.

4. If the error recurs with the highest device resource setting (1GB), shutdown the system and remove some PCIe devices; then, power on the system.
5. If the reboot failed, repeat step 1 to step 4.
6. If the error recurs, press Enter to access System Setup Utility.
7. Select **System Settings → Devices and I/O Ports → PCI 64–Bit Resource Allocation**, then; modify the setting from **Auto** to **Enable**.
8. DC cycle the system and ensure the system is enter UEFI boot menu or the operating system; then, capture the FFDC log.
9. Contact Lenovo technical support.

A Lenovo optional device that was just installed does not work.

1. Make sure that:
   - The device is supported for the server (see https://serverproven.lenovo.com).
   - You followed the installation instructions that came with the device and the device is installed correctly.
   - You have not loosened any other installed devices or cables.
   - You updated the configuration information in system setup. When you start a server and press the key according to the on-screen instructions to display the Setup Utility. For more information, see the "Startup" section in the LXPM documentation compatible with your server at https://pubs.lenovo.com/lxpm-overview/. Whenever memory or any other device is changed, you must update the configuration.
2. Reseat the device that you have just installed.
3. Replace the device that you have just installed.
4. Reseat the cable connection and check there is no physical damage to the cable.
5. If there is any cable damage, then replace the cable.

A Lenovo optional device that worked previously does not work now

1. Make sure that all of the cable connections for the device are secure.
2. If the device comes with test instructions, use those instructions to test the device.
3. Reseat the cable connection and check if any physical parts have been damaged.
4. Replace the cable.
5. Reseat the failing device.
6. Replace the failing device.

Performance problems

Use this information to solve performance problems.

- "Network performance" on page 428
- "Operating system performance" on page 429

Network performance

Complete the following steps until the problem is solved:

1. Isolate which network is operating slowly (such as storage, data, and management). You might find it helpful to use ping tools or operating-system tools such as task manager or resource manager.
2. Check for traffic congestion on the network.
3. Update the NIC device driver, or the storage device controller device driver.

4. Use the traffic-diagnostic tools that are provided by the IO-module manufacturer.

Operating system performance

Complete the following steps until the problem is solved:

1. If you have recently made changes to the compute node (for example updated device drivers or installed software applications) remove the changes.
2. Check for any networking issues.
3. Check the operating system logs for performance related errors.
4. Check for events related to high temperatures and power issues as the compute node might be throttled to help with cooling. If it is throttled, reduce the workload on the compute node to help improve performance.
5. Check for events related to disabled DIMMs. If you do not have enough memory for the application workload, your operating system will have poor performance.
6. Ensure that the workload is not too high for the configuration.

Power on and power off problems

Use this information to resolve issues when powering on or powering off the server.

- "The power button does not work (server does not start)" on page 429
- "Server does not power on" on page 430
- "Server does not power off" on page 430

The power button does not work (server does not start)

Note: After the server is connected to AC power, it will take one to three minutes for XCC to initialize. The power button does not work during the initialization.

Complete the following steps until the problem is resolved:

1. Make sure that the power button on the server is working correctly:
   a. Disconnect the server power cords.
   b. Reconnect the server power cords.
   c. Reconnect the front operator panel cable, and then repeat steps 1a and 1b.
      - If the server starts, reseat the front operator panel.
      - If the problem remains, replace the front operator panel.
2. Make sure that:
   - The power cords are correctly connected to the server and to a working electrical outlet.
   - The LEDs on the power supply units work normally.
   - The power button LED is lit on and flash slowly.
   - The button-push force is sufficient and the button shows release response after pushed.
3. If the power button LED does not light on or flash correctly, reseat all the power supply units and make sure that the power input status LED is lit on.
4. If you have just installed an optional device, remove it, and restart the server.
5. If the issue is still observed or without power button LED lit on, implement the minimum configuration to check whether any specific components have locked the power permission. Replace power supply units and check the power button function after installing each unit.

6. If all procedures are tried and the issue cannot be resolved, collect the failure information with system logs captured and contact Lenovo Support.

Server does not power on

Complete the following steps until the problem is resolved:

1. Check the event logs for any events related to the server not powering on.
2. Check for any LEDs that are blinking amber or yellow.
3. Check the system status LED on the system board (system board assembly). See “Troubleshooting by system LEDs and diagnostics display” on page 397
4. Check if the power input status LED is off or the yellow LED is lit on the power supply unit.
5. Do the AC cycle to the system, that is, power off the power supply units and re-power them on.
6. Remove the CMOS battery for at least ten seconds, then, reinstall the CMOS battery.
7. Try to power on the system by IPMI command through XCC or by the power button.
8. Implement the minimum configuration (one processor, one DIMM and one PSU without any adapter or any drive installed).
9. Reseat all power supply units and make sure that the power input status LED on the power supply unit is lit.
10. Replace power supply units and check the power button function after installing each unit.
11. If the issue cannot be resolved by all attempts above, call service to review the issue symptoms and see whether the system board (system board assembly) replacement is necessary.

Server does not power off

Complete the following steps until the problem is resolved:

1. Determine whether you are using an Advanced Configuration and Power Interface (ACPI) or a non-ACPI operating system. If you are using a non-ACPI operating system, complete the following steps:
   a. Press Ctrl+Alt+Delete.
   b. Turn off the server by pressing the power button on the front operator panel and holding it down for 5 seconds.
   c. Restart the server.
   d. If the server fails POST and the power-control button does not work, disconnect the power cord for 20 seconds; then, reconnect the power cord and restart the server.
2. If the problem remains or if you are using an ACPI-aware operating system, suspect the system board (system board assembly).

Power problems

Use this information to resolve issues related to power.

System error LED is on and event log "Power supply has lost input" is displayed

To resolve the problem, ensure that:

1. The power supply is properly connected to a power cord.
2. The power cord is connected to a properly grounded electrical outlet for the server.
3. Make sure that the power supply AC source is stable within the supported range.
4. Swap the power supply to see if the issue follows the power supply, if it follows the power supply, then replace the failing one.

5. Review the event log and see how the problem it is to follow the event log actions to resolve the problems.

Serial-device problems

Use this information to solve problems with serial ports or devices.

- "Number of displayed serial ports is less than the number of installed serial ports" on page 431
- "Serial device does not work" on page 431

Number of displayed serial ports is less than the number of installed serial ports

Complete the following steps until the problem is solved.

1. Make sure that:
   - Each port is assigned a unique address in the Setup utility and none of the serial ports is disabled.
   - The serial-port adapter (if one is present) is seated correctly.
2. Reseat the serial port adapter.
3. Replace the serial port adapter.

Serial device does not work

1. Make sure that:
   - The device is compatible with the server.
   - The serial port is enabled and is assigned a unique address.
   - The device is connected to the correct connector. See "System-board-assembly connectors" on page 33.
2. To enable the serial port module on Linux or Microsoft Windows, do one of the followings according to the installed operating system:

   Note: If the Serial over LAN (SOL) or Emergency Management Services (EMS) feature is enabled, the serial port will be hidden on Linux and Microsoft Windows. Therefore, it is required to disable SOL and EMS to use the serial port on operating systems for serial devices.

   - For Linux:

     Open the ipmitool and enter the following command to disable the Serial over LAN (SOL) feature:

     ```
     -I lanplus -H IP -U USERID -P PASSWORD sol deactivate
     ```

   - For Microsoft Windows:
     a. Open the ipmitool and enter the following command to disable the SOL feature:

        ```
        -I lanplus -H IP -U USERID -P PASSWORD sol deactivate
        ```

     b. Open Windows PowerShell and enter the following command to disable the Emergency Management Services (EMS) feature:

        ```
        Bcdedit /ems off
        ```

     c. Restart the server to ensure that the EMS setting takes effect.
3. Reseat the following components:
   a. Failing serial device.
   b. Serial cable.
4. Replace the following components:
   a. Failing serial device.

b. Serial cable.

5. (Trained technician only) Replace the system board.

Software problems

Use this information to solve software problems.

1. To determine whether the problem is caused by the software, make sure that:
   - The server has the minimum memory that is needed to use the software. For memory requirements, see the information that comes with the software.

     Note: If you have just installed an adapter or memory, the server might have a memory-address conflict.
   - The software is designed to operate on the server.
   - Other software works on the server.
   - The software works on another server.
2. If you receive any error messages while you use the software, see the information that comes with the software for a description of the messages and suggested solutions to the problem.
3. Contact your place of purchase of the software.

Storage drive problems

Use this information to resolve issues related to the storage drives.

- "Server cannot recognize a drive" on page 432
- "Multiple drives fail" on page 433
- "Multiple drives are offline" on page 433
- "A replacement drive does not rebuild" on page 433
- "Green drive activity LED does not represent actual state of associated drive" on page 433
- "Yellow drive status LED does not represent actual state of associated drive" on page 434
- "U.3 NVMe drive can be detected in NVMe connection, but cannot be detected in Tri-mode" on page 434

Server cannot recognize a drive

Complete the following steps until the problem is solved.

1. Observe the associated yellow drive status LED. If the LED is lit, it indicates a drive fault.
2. If the status LED is lit, remove the drive from the bay, wait 45 seconds, and reinsert the drive, making sure that the drive assembly connects to the drive backplane.
3. Observe the associated green drive activity LED and the yellow status LED and perform corresponding operations in different situations:
   - If the green activity LED is flashing and the yellow status LED is not lit, the drive is recognized by the controller and is working correctly. Run the diagnostics tests for the drives. When you start a server and press the key according to the on-screen instructions, the LXPM is displayed by default. (For more information, see the "Startup" section in the LXPM documentation compatible with your server at https://pubs.lenovo.com/lxpm-overview/.) You can perform drive diagnostics from this interface. From the Diagnostic page, click **Run Diagnostic → Disk Drive Test**.
   - If the green activity LED is flashing and the yellow status LED is flashing slowly, the drive is recognized by the controller and is rebuilding.
   - If neither LED is lit or flashing, check whether the drive backplane is correctly seated. For details, go to step 4.

- If the green activity LED is flashing and the yellow status LED is lit, replace the drive.

4. Make sure that the drive backplane is correctly seated. When it is correctly seated, the drive assemblies correctly connect to the backplane without bowing or causing movement of the backplane.
5. Reseat the backplane power cable and repeat steps 1 through 3.
6. Reseat the backplane signal cable and repeat steps 1 through 3.
7. Suspect the backplane signal cable or the backplane:
   - Replace the affected backplane signal cable.
   - Replace the affected backplane.
8. Run the diagnostics tests for the drives. When you start a server and press the key according to the on-screen instructions, the LXPM is displayed by default. (For more information, see the “Startup” section in the LXPM documentation compatible with your server at https://pubs.lenovo.com/lxpm-overview/.) You can perform drive diagnostics from this interface. From the Diagnostic page, click **Run Diagnostic → Disk Drive Test**.

   Based on those tests:
   - If the backplane passes the test but the drives are not recognized, replace the backplane signal cable and run the tests again.
   - Replace the backplane.
   - If the adapter fails the test, disconnect the backplane signal cable from the adapter and run the tests again.
   - If the adapter fails the test, replace the adapter.

Multiple drives fail

Complete the following steps until the problem is solved:

- View the Lenovo XClarity Controller event log for events related to power supplies or vibration issues and resolve those events.
- Make sure that the device drivers and firmware for the drive and server are at the latest level.

Important: Some cluster solutions require specific code levels or coordinated code updates. If the device is part of a cluster solution, verify that the latest level of code is supported for the cluster solution before you update the code.

Multiple drives are offline

Complete the following steps until the problem is solved:

- View the Lenovo XClarity Controller event log for events related to power supplies or vibration issues and resolve those events.
- View the storage subsystem log for events related to the storage subsystem and resolve those events.

A replacement drive does not rebuild

Complete the following steps until the problem is solved:

1. Make sure that the drive is recognized by the adapter (the green drive activity LED is flashing).
2. Review the SAS/SATA RAID adapter documentation to determine the correct configuration parameters and settings.

Green drive activity LED does not represent actual state of associated drive

Complete the following steps until the problem is solved:

1. If the green drive activity LED does not flash when the drive is in use, run the diagnostics tests for the drives. When you start a server and press the key according to the on-screen instructions, the LXPM is displayed by default. (For more information, see the “Startup” section in the LXPM documentation compatible with your server at https://pubs.lenovo.com/lxpm-overview/.) You can perform drive diagnostics from this interface. From the Diagnostic page, click **Run Diagnostic → Disk Drive Test**
2. If the drive passes the test, replace the backplane.
3. If the drive fails the test, replace the drive.

Yellow drive status LED does not represent actual state of associated drive

Complete the following steps until the problem is solved:

1. Turn off the server.
2. Reseat the SAS/SATA adapter.
3. Reseat the backplane signal cable and backplane power cable.
4. Reseat the drive.
5. Power on the server and observe the activity of the drive LEDs.

U.3 NVMe drive can be detected in NVMe connection, but cannot be detected in Tri-mode

In Tri-mode, NVMe drives are connected via a PCIe x1 link to the controller. To support Tri-mode with U.3 NVMe drives, **U.3 x1 mode** must be enabled for the selected drive slots on the backplane through the XCC Web GUI. By default, the backplane setting is **U.2 x4 mode**.

Complete the following steps to enable **U.3 x1 mode**:

1. Log into the XCC Web GUI, and choose **Storage → Detail** from the navigation tree on the left.
2. In the window that is displayed, click the icon ⚙ next to **Backplane**.
3. In the dialog box that is displayed, select the target drive slots and click **Apply**.
4. Do a DC power cycle to make the setting take effect.

USB I/O board problems

Use this information to solve problems related to the USB I/O board.

- “All or some keys on the keyboard do not work” on page 434
- “Mouse does not work” on page 435
- “USB-device (including hypervisor OS installation USB device) does not work” on page 435

All or some keys on the keyboard do not work

1. Make sure that:
   - The keyboard cable is securely connected.
   - The server and the monitor are turned on.
2. If you are using a USB keyboard and it is connected to a USB hub, disconnect the keyboard from the hub and connect it directly to the server.
3. Replace the keyboard.
4. If the methods above do not work, plug the USB keyboard to the front, internal or rear USB port(s).
   - If the USB keyboard does not work plugging to front USB ports but works plugging to the internal port, replace the front IO module. Refer to ***Internal Cable Routing Guide*** for more cable routing information.

- If the USB keyboard does not work plugging to the internal USB port but works plugging to the rear ports, replace the USB I/O board. Refer to "USB I/O board replacement" on page 378 for more information.
- If the USB keyboard does not work plugging to front, internal or rear USB port(s), replace the system I/O board. Refer to "System I/O board replacement (trained technicians only)" on page 352 for more information.

Mouse does not work

1. Make sure that:
   - The mouse cable is securely connected to the server.
   - The mouse device drivers are installed correctly.
   - The server and the monitor are turned on.
   - The mouse option is enabled in the Setup Utility.
2. If you are using a USB mouse and it is connected to a USB hub, disconnect the mouse from the hub and connect it directly to the server.
3. Replace the mouse.
4. If the methods above do not work, plug the USB mouse to the front, internal or rear USB port(s).
   - If the USB mouse does not work plugging to front USB ports but works plugging to the internal port, replace the front IO module. Refer to ***Internal Cable Routing Guide*** for more cable routing information.
   - If the USB mouse does not work plugging to the internal USB port but works plugging to the rear ports, replace the USB I/O board. Refer to "USB I/O board replacement" on page 378 for more information.
   - If the USB mouse does not work plugging to front, internal or rear USB port(s), replace the system I/O board. Refer to "System I/O board replacement (trained technicians only)" on page 352 for more information.

USB-device (including hypervisor OS installation USB device) does not work

1. Make sure that the operating system supports USB devices.
2. If you are using a USB hub, disconnect the USB device from the hub and connect it directly to the server.
3. Replace the USB device to check the device is workable.
4. If the methods above do not work, plug the USB device to the front, internal or rear USB port(s).
   - If the USB device does not work plugging to front USB ports but works plugging to the internal port, replace the front IO module. Refer to ***Internal Cable Routing Guide*** for more cable routing information.
   - If the USB device does not work plugging to the internal USB port but works plugging to the rear ports, replace the USB I/O board. Refer to "USB I/O board replacement" on page 378 for more information.
   - If the USB device does not work plugging to front, internal or rear USB port(s), replace the system I/O board. Refer to "System I/O board replacement (trained technicians only)" on page 352 for more information.

Appendix A. Hardware disassembling for recycle

Follow the instructions in this section to recycle components with compliance with local laws or regulations.

Disassemble the system board assembly for recycle

Follow the instructions in this section to disassemble the system board assembly before recycling.

About this task

Before disassembling the system board assembly:

1. Separate the system I/O board from the processor board.

   Note: To prevent the contact of the I/O board from damage, pinch and lift the plunger on the I/O board upward a little and pull out the I/O board outward. During the entire pulling action, ensure that the I/O board remains as horizontal as possible.

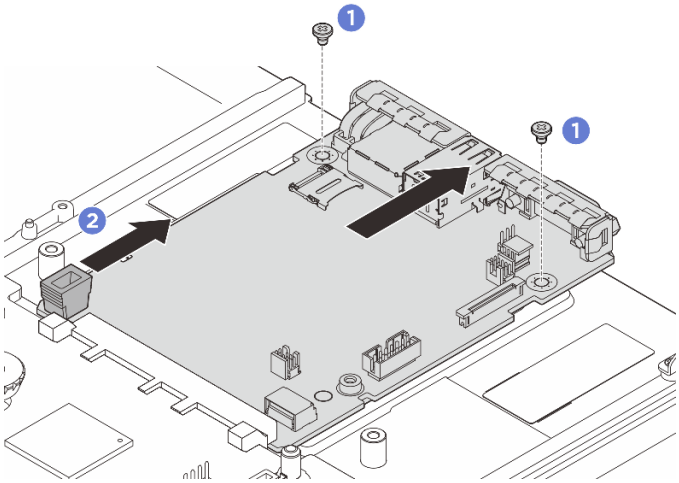

Figure 337. System I/O board removal

   a. 1 Remove the screws that secure the system I/O board.
   b. 2 Pinch the handle and slide the system I/O board towards the rear to disengage it from the processor board.
2. Refer to local environmental, waste or disposal regulations to ensure compliance.

Procedure

Step 1. Remove the following components as illustrated:

- Five guide pins (with 7mm wrench)
- Two low-profile screws (with PH2 screwdriver)
- Two plungers (with PH2 screwdriver)

© Copyright Lenovo 2025

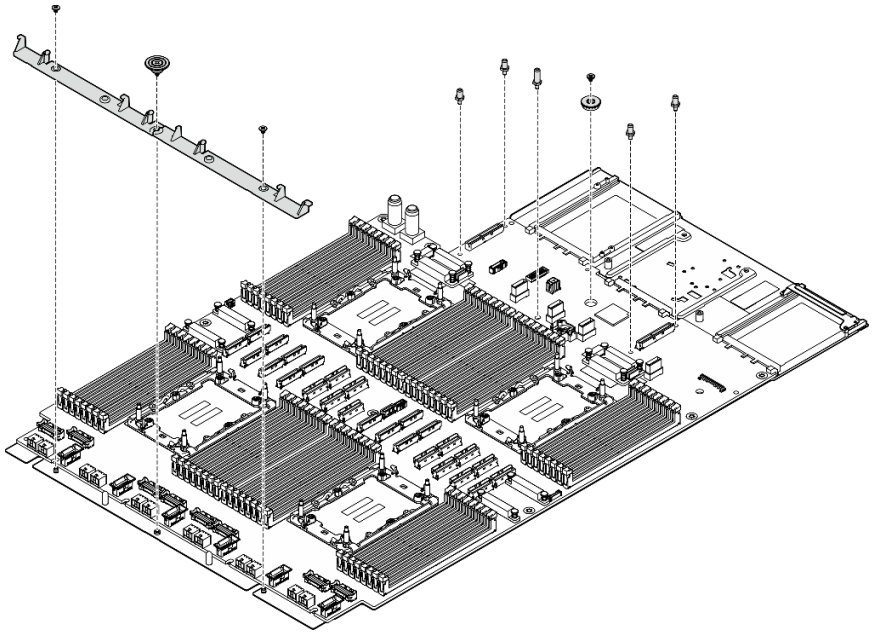

Figure 338. Component removal

Step 2. Remove the following screws as illustrated:

- Four low-profile screws (with PH2 screwdriver)
- Nine slotted screws (with PH1 screwdriver)

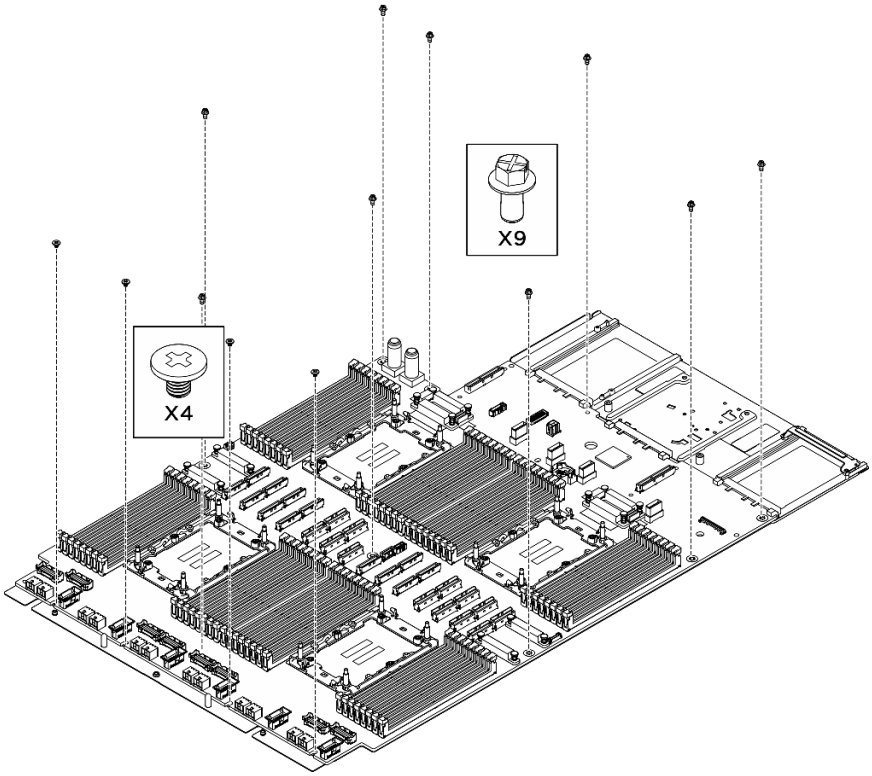

Figure 339. Screw removal

Step 3. Separate the processor board from the supporting sheet metal.

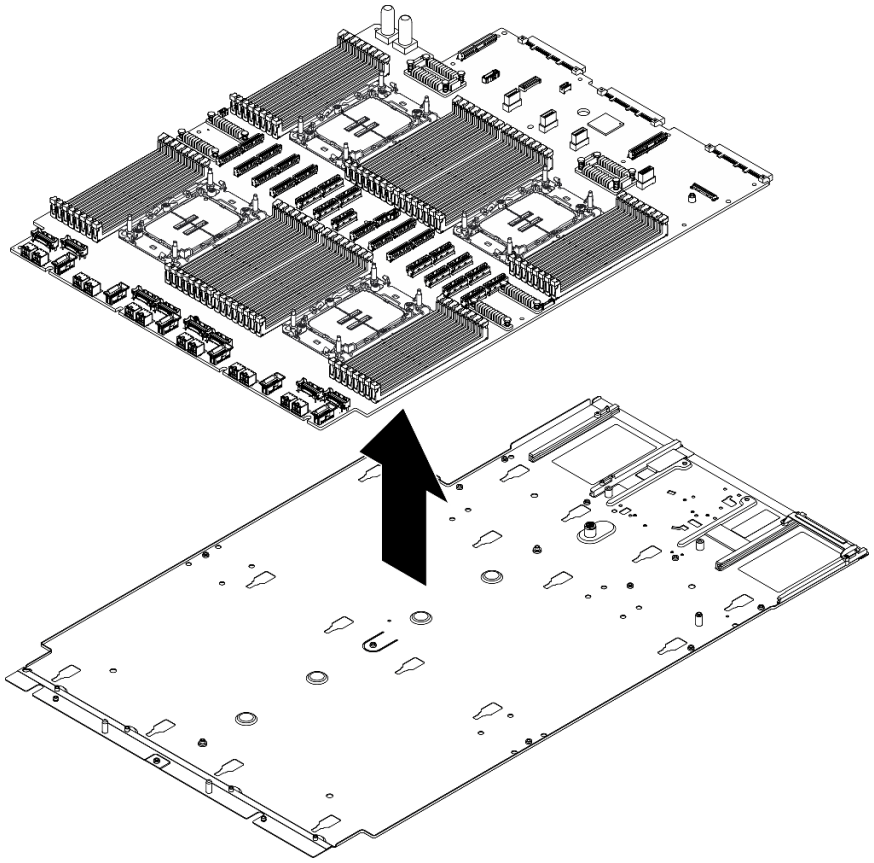

Figure 340. Processor board disassembly

After you finish

After disassembling the system board assembly, recycle the unit in compliance with local regulations.

Appendix B. Getting help and technical assistance

If you need help, service, or technical assistance or just want more information about Lenovo products, you will find a wide variety of sources available from Lenovo to assist you.

On the World Wide Web, up-to-date information about Lenovo systems, optional devices, services, and support are available at:

http://datacentersupport.lenovo.com

Note: IBM is Lenovo's preferred service provider for ThinkSystem.

Before you call

Before you call, there are several steps that you can take to try and solve the problem yourself. If you decide that you do need to call for assistance, gather the information that will be needed by the service technician to more quickly resolve your problem.

Attempt to resolve the problem yourself

You can solve many problems without outside assistance by following the troubleshooting procedures that Lenovo provides in the online help or in the Lenovo product documentation. The online help also describes the diagnostic tests that you can perform. The documentation for most systems, operating systems, and programs contains troubleshooting procedures and explanations of error messages and error codes. If you suspect a software problem, see the documentation for the operating system or program.

You can find the product documentation for your ThinkSystem products at the following location:

https://pubs.lenovo.com/

You can take these steps to try to solve the problem yourself:

- Check all cables to make sure that they are connected.
- Check the power switches to make sure that the system and any optional devices are turned on.
- Check for updated software, firmware, and operating-system device drivers for your Lenovo product. (See the following links) The Lenovo Warranty terms and conditions state that you, the owner of the Lenovo product, are responsible for maintaining and updating all software and firmware for the product (unless it is covered by an additional maintenance contract). Your service technician will request that you upgrade your software and firmware if the problem has a documented solution within a software upgrade.
  - Drivers and software downloads
    - https://datacentersupport.lenovo.com/products/servers/thinksystem/sr860v4/7djn/downloads/driver-list
  - Operating system support center
    - https://datacentersupport.lenovo.com/solutions/server-os
  - Operating system installing instructions
    - https://pubs.lenovo.com/thinksystem#os-installation
- If you have installed new hardware or software in your environment, check https://serverproven.lenovo.com to make sure that the hardware and software are supported by your product.
- Refer to Chapter 7 “Problem determination” on page 395 for instructions on isolating and solving issues.
- Go to http://datacentersupport.lenovo.com and check for information to help you solve the problem.

© Copyright Lenovo 2025

To find the Tech Tips available for your server:

1. Go to http://datacentersupport.lenovo.com and navigate to the support page for your server.
2. Click on **How To's** from the navigation pane.
3. Click **Article Type → Solution** from the drop-down menu.

   Follow the on-screen instructions to choose the category for the problem that you are having.

- Check Lenovo Data Center Forum at https://forums.lenovo.com/t5/Datacenter-Systems/ct-p/sv_eg to see if someone else has encountered a similar problem.

Gathering information needed to call Support

If you require warranty service for your Lenovo product, the service technicians will be able to assist you more efficiently if you prepare the appropriate information before you call. You can also go to http://datacentersupport.lenovo.com/warrantylookup for more information about your product warranty.

Gather the following information to provide to the service technician. This data will help the service technician quickly provide a solution to your problem and ensure that you receive the level of service for which you might have contracted.

- Hardware and Software Maintenance agreement contract numbers, if applicable
- Machine type number (Lenovo 4-digit machine identifier). Machine type number can be found on the ID label, see "Identify the server and access the Lenovo XClarity Controller" on page 41.
- Model number
- Serial number
- Current system UEFI and firmware levels
- Other pertinent information such as error messages and logs

As an alternative to calling Lenovo Support, you can go to https://support.lenovo.com/servicerequest to submit an Electronic Service Request. Submitting an Electronic Service Request will start the process of determining a solution to your problem by making the pertinent information available to the service technicians. The Lenovo service technicians can start working on your solution as soon as you have completed and submitted an Electronic Service Request.

Collecting service data

To clearly identify the root cause of a server issue or at the request of Lenovo Support, you might need collect service data that can be used for further analysis. Service data includes information such as event logs and hardware inventory.

Service data can be collected through the following tools:

- **Lenovo XClarity Provisioning Manager**

  Use the Collect Service Data function of Lenovo XClarity Provisioning Manager to collect system service data. You can collect existing system log data or run a new diagnostic to collect new data.

- **Lenovo XClarity Controller**

  You can use the Lenovo XClarity Controller web interface or the CLI to collect service data for the server. The file can be saved and sent to Lenovo Support.

  – For more information about using the web interface to collect service data, see the "Backing up the BMC configuration" section in the XCC documentation compatible with your server at https://pubs.lenovo.com/lxcc-overview/.

  - For more information about using the CLI to collect service data, see the “XCC `servicelog` command” section in the XCC documentation compatible with your server at https://pubs.lenovo.com/lxcc-overview/.

- **Lenovo XClarity Administrator**

  Lenovo XClarity Administrator can be set up to collect and send diagnostic files automatically to Lenovo Support when certain serviceable events occur in Lenovo XClarity Administrator and the managed endpoints. You can choose to send diagnostic files to Lenovo Support using Call Home or to another service provider using SFTP. You can also manually collect diagnostic files, open a problem record, and send diagnostic files to the Lenovo Support.

  You can find more information about setting up automatic problem notification within the Lenovo XClarity Administrator at https://pubs.lenovo.com/lxca/admin_setupcallhome.

- **Lenovo XClarity Essentials OneCLI**

  Lenovo XClarity Essentials OneCLI has inventory application to collect service data. It can run both in-band and out-of-band. When running in-band within the host operating system on the server, OneCLI can collect information about the operating system, such as the operating system event log, in addition to the hardware service data.

  To obtain service data, you can run the `getinfor` command. For more information about running the `getinfor`, see https://pubs.lenovo.com/lxce-onecli/onecli_r_getinfor_command.

Contacting Support

You can contact Support to obtain help for your issue.

You can receive hardware service through a Lenovo Authorized Service Provider. To locate a service provider authorized by Lenovo to provide warranty service, go to https://datacentersupport.lenovo.com/serviceprovider and use filter searching for different countries. For Lenovo support telephone numbers, see https://datacentersupport.lenovo.com/supportphonelist for your region support details.

Appendix C. Documents and supports

This section provides handy documents, driver and firmware downloads, and support resources.

Documents download

This section provides introduction and download link for handy documents.

Documents

Download the following product documentations at:

https://pubs.lenovo.com/sr860v4/pdf_files.html

- ***Rail Installation Guides***
  - Rail installation in a rack
- ***User Guide***
  - Complete overview, system configuration, hardware components replacing, and troubleshooting.

    Selected chapters from *User Guide*:
    - ***System Configuration Guide*** **:** Server overview, components identification, system LEDs and diagnostics display, product unboxing, setting up and configuring the server.
    - ***Hardware Maintenance Guide*** **:** Installing hardware components and troubleshooting.
- ***Cable Routing Guide***
  - Cable routing information.
- ***Messages and Codes Reference***
  - XClarity Controller, LXPM, and uEFI events
- ***UEFI Manual***
  - UEFI setting introduction

Support websites

This section provides driver and firmware downloads and support resources.

Support and downloads

- Drivers and Software download website for ThinkSystem SR860 V4
  - https://datacentersupport.lenovo.com/products/servers/thinksystem/sr860v4/7djn/downloads/driver-list
- Lenovo Data Center Forum
  - https://forums.lenovo.com/t5/Datacenter-Systems/ct-p/sv_eg
- Lenovo Data Center Support for ThinkSystem SR860 V4
  - https://datacentersupport.lenovo.com/products/servers/thinksystem/sr860v4/7djn
- Lenovo License Information Documents
  - https://datacentersupport.lenovo.com/documents/lnvo-eula
- Lenovo Press website (Product Guides/Datasheets/White papers)
  - https://lenovopress.lenovo.com/

© Copyright Lenovo 2025

- Lenovo Privacy Statement
  - https://www.lenovo.com/privacy
- Lenovo Product Security Advisories
  - https://datacentersupport.lenovo.com/product_security/home
- Lenovo Product Warranty Plans
  - http://datacentersupport.lenovo.com/warrantylookup
- Lenovo Server Operating Systems Support Center website
  - https://datacentersupport.lenovo.com/solutions/server-os
- Lenovo ServerProven website (Options compatibility lookup)
  - https://serverproven.lenovo.com
- Operating System Installation Instructions
  - https://pubs.lenovo.com/thinksystem#os-installation
- Submit an eTicket (service request)
  - https://support.lenovo.com/servicerequest
- Subscribe to Lenovo Data Center Group product notifications (Stay up to date on firmware updates)
  - https://datacentersupport.lenovo.com/solutions/ht509500

Appendix D. Notices

Lenovo may not offer the products, services, or features discussed in this document in all countries. Consult your local Lenovo representative for information on the products and services currently available in your area.

Any reference to a Lenovo product, program, or service is not intended to state or imply that only that Lenovo product, program, or service may be used. Any functionally equivalent product, program, or service that does not infringe any Lenovo intellectual property right may be used instead. However, it is the user's responsibility to evaluate and verify the operation of any other product, program, or service.

Lenovo may have patents or pending patent applications covering subject matter described in this document. The furnishing of this document is not an offer and does not provide a license under any patents or patent applications. You can send inquiries in writing to the following:

Lenovo (United States), Inc.
8001 Development Drive
Morrisville, NC 27560
U.S.A.
Attention: Lenovo Director of Licensing

LENOVO PROVIDES THIS PUBLICATION “AS IS” WITHOUT WARRANTY OF ANY KIND, EITHER EXPRESS OR IMPLIED, INCLUDING, BUT NOT LIMITED TO, THE IMPLIED WARRANTIES OF NON-INFRINGEMENT, MERCHANTABILITY OR FITNESS FOR A PARTICULAR PURPOSE. Some jurisdictions do not allow disclaimer of express or implied warranties in certain transactions, therefore, this statement may not apply to you.

This information could include technical inaccuracies or typographical errors. Changes are periodically made to the information herein; these changes will be incorporated in new editions of the publication. Lenovo may make improvements and/or changes in the product(s) and/or the program(s) described in this publication at any time without notice.

The products described in this document are not intended for use in implantation or other life support applications where malfunction may result in injury or death to persons. The information contained in this document does not affect or change Lenovo product specifications or warranties. Nothing in this document shall operate as an express or implied license or indemnity under the intellectual property rights of Lenovo or third parties. All information contained in this document was obtained in specific environments and is presented as an illustration. The result obtained in other operating environments may vary.

Lenovo may use or distribute any of the information you supply in any way it believes appropriate without incurring any obligation to you.

Any references in this publication to non-Lenovo Web sites are provided for convenience only and do not in any manner serve as an endorsement of those Web sites. The materials at those Web sites are not part of the materials for this Lenovo product, and use of those Web sites is at your own risk.

Any performance data contained herein was determined in a controlled environment. Therefore, the result obtained in other operating environments may vary significantly. Some measurements may have been made on development-level systems and there is no guarantee that these measurements will be the same on generally available systems. Furthermore, some measurements may have been estimated through extrapolation. Actual results may vary. Users of this document should verify the applicable data for their specific environment.

© Copyright Lenovo 2025

Trademarks

LENOVO, THINKSYSTEM, Flex System, System x, NeXtScale System, xArchitecture, ThinkEdge, and Neptune are trademarks of Lenovo.

Intel and Intel Xeon are trademarks of Intel Corporation in the United States, other countries, or both.

Internet Explorer, Microsoft, and Windows are trademarks of the Microsoft group of companies.

Linux is a registered trademark of Linus Torvalds.

All other trademarks are the property of their respective owners. © 2018 Lenovo.

Important notes

Processor speed indicates the internal clock speed of the processor; other factors also affect application performance.

CD or DVD drive speed is the variable read rate. Actual speeds vary and are often less than the possible maximum.

When referring to processor storage, real and virtual storage, or channel volume, KB stands for 1 024 bytes, MB stands for 1 048 576 bytes, and GB stands for 1 073 741 824 bytes.

When referring to hard disk drive capacity or communications volume, MB stands for 1 000 000 bytes, and GB stands for 1 000 000 000 bytes. Total user-accessible capacity can vary depending on operating environments.

Maximum internal hard disk drive capacities assume the replacement of any standard hard disk drives and population of all hard-disk-drive bays with the largest currently supported drives that are available from Lenovo.

Maximum memory might require replacement of the standard memory with an optional memory module.

Each solid-state memory cell has an intrinsic, finite number of write cycles that the cell can incur. Therefore, a solid-state device has a maximum number of write cycles that it can be subjected to, expressed as `total bytes written` (TBW). A device that has exceeded this limit might fail to respond to system-generated commands or might be incapable of being written to. Lenovo is not responsible for replacement of a device that has exceeded its maximum guaranteed number of program/erase cycles, as documented in the Official Published Specifications for the device.

Lenovo makes no representations or warranties with respect to non-Lenovo products. Support (if any) for the non-Lenovo products is provided by the third party, not Lenovo.

Some software might differ from its retail version (if available) and might not include user manuals or all program functionality.

Electronic emission notices

When you attach a monitor to the equipment, you must use the designated monitor cable and any interference suppression devices that are supplied with the monitor.

Additional electronic emissions notices are available at:

https://pubs.lenovo.com/important_notices/

Taiwan Region BSMI RoHS declaration

單元 Unit	限用物質及其化學符號 Restricted substances and its chemical symbols					
	鉛Lead (PB)	汞Mercury (Hg)	鎘Cadmium (Cd)	六價鉻 Hexavalent chromium (Cr^{+6})	多溴聯苯 Polybrominated biphenyls (PBB)	多溴二苯醚 Polybrominated diphenyl ethers (PBDE)
機架	○	○	○	○	○	○
外部蓋板	○	○	○	○	○	○
機械組合件	–	○	○	○	○	○
空氣傳動設備	–	○	○	○	○	○
冷卻組合件	–	○	○	○	○	○
內存模組	–	○	○	○	○	○
處理器模組	–	○	○	○	○	○
電纜組合件	–	○	○	○	○	○
電源供應器	–	○	○	○	○	○
儲備設備	–	○	○	○	○	○
印刷電路板	–	○	○	○	○	○

備考1. 〝超出0.1 wt %〞及〝超出0.01 wt %〞係指限用物質之百分比含量超出百分比含量基準值。

Note1 : "exceeding 0.1wt%" and "exceeding 0.01 wt%" indicate that the percentage content of the restricted substance exceeds the reference percentage value of presence condition.

備考2. 〝○〞係指該項限用物質之百分比含量未超出百分比含量基準值。

Note2 : "○"indicates that the percentage content of the restricted substance does not exceed the percentage of reference value of presence.

備考3. 〝-〞係指該項限用物質為排除項目。

Note3 : The "-" indicates that the restricted substance corresponds to the exemption.

Taiwan Region import and export contact information

Contacts are available for Taiwan Region import and export information.

委製商/進口商名稱: 台灣聯想環球科技股份有限公司
進口商地址: 台北市南港區三重路 66 號 8 樓
進口商電話: 0800-000-702

TCO Certified

Selected models/configurations meet the requirements of TCO Certified.

Note: TCO Certified is an international third-party sustainability certification for IT products. For details, go to https://www.lenovo.com/us/en/compliance/tco/.